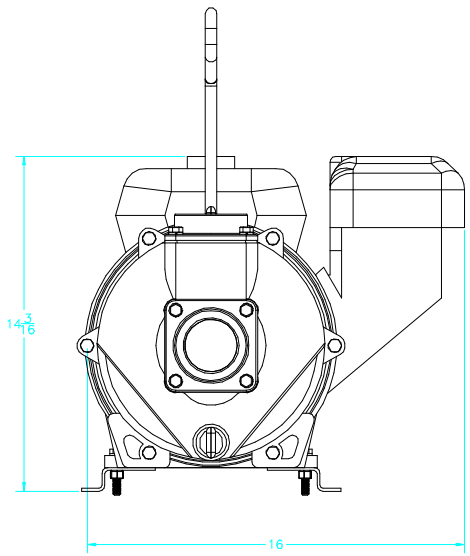

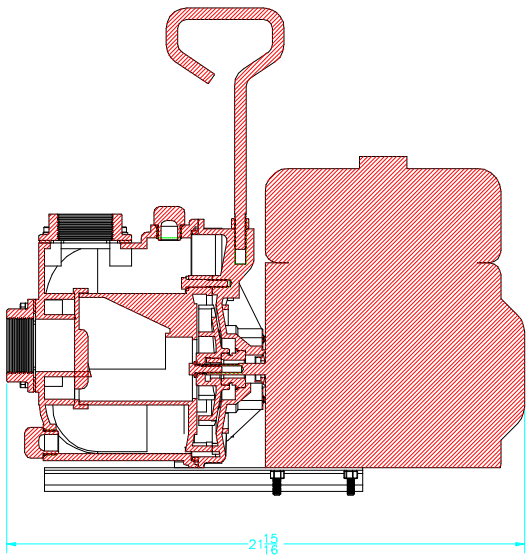

Parts List			
Item	Qty	PART NO.	DESCRIPTION
1	1	12705	CHECK VALVE
2	1	12710	O'RING FOR SEAL ASSY
3	13	12715A	5/16-24 X 1 3/4 HHCS
4	1	12716	SLINGER
5	4	12717	O'RING FOR SCREW HD
6	1	12719A	PUMP BODY O'RING
7	1	12733V	PUMP SEAL ASSEMBLY
8	1	12765A	5/16-24 X 1 1/8 HFS
9	1	12774VA	IMPELLER BOLT GASKET
10	4	12901	5/16" FLAT WASHER
11	1	12902A	3/16X3/16X5/8 KEY
12	2	13777	3" POLY DRAIN PLUG
13	2	13778	PLUG O'RING
14	1	15022	HANDLE
15	1	15702	C.I. VOLUTE
16	1	15703	C.I. REAR BRACKET
17	1	15712	C.I. PUMP BODY
18	1	15751	REAR BRACKET SHIM
19	1	17010	1/2-13 UNC HEX NUT
20	2	17033	MOTOR MT. BRACKET
21	4	17034	5/16 X 1 3/4 BOLT
22	13	V10118	5/16" LOCKWASHER
23	4	V10119	5/16" SS HEX NUT
24	1	12910	PUMP DECAL (N/S)
25	1	12914	PUMP LABEL (N/S)
26	1	E6H	6.5HP HONDA ENGINE
27	1	15772	C.I. IMPELLER

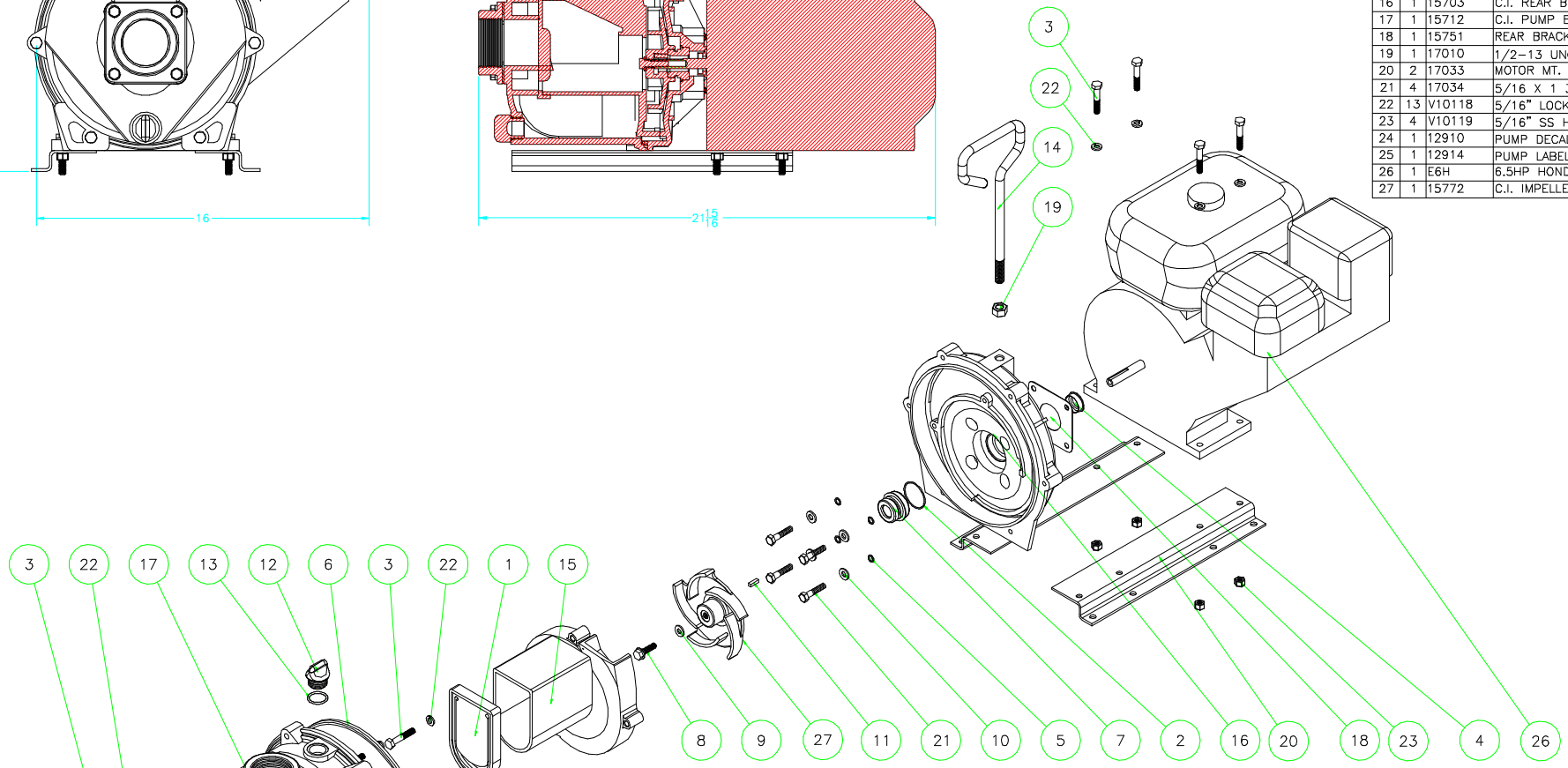

BANJO®
LIQUID HANDLING PRODUCTS

BANJO CORPORATION
150 BANJO DR. * CRAWFORDSVILLE, IN 47933

THIS DRAWING AND ALL INFORMATION CONTAINED THEREON ARE THE EXCLUSIVE PROPERTY OF BANJO CORPORATION. UNLESS SPECIFICALLY NOTED, THIS DRAWING AND ITEMS SHOWN ON THIS DRAWING ARE SUBJECT TO CHANGE AT ANY TIME.

PART NO.
222PIH6

TITLE
2" C.I. PUMP W/ 6.5HP OHV HONDA ENGINGE