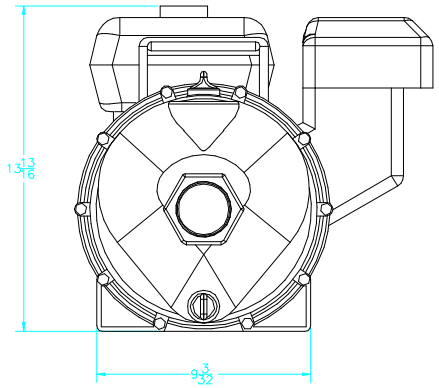

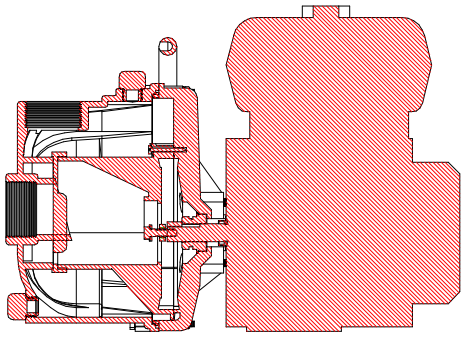

Parts List			
Item	Qty	PART NO.	DESCRIPTION
1	10	V07018	1/4" LOCKWASHER
2	10	V07019	1/4" HEX NUT
3	1	12702A	POLY PUMP VOLUTE
4	1	12719AV	PUMP BODY O'RING
5	10	12720	BODY SCREW
6	1	12774VA	IMPELLER BOLT GASKET
7	1	12775A	7/16-14 HEX NUT
8	1	12902A	3/16X3/16X5/8 KEY
9	1	12910	PUMP DECAL (N/S)
10	1	12754V	O'RING SEGMENT(N/S)
11	1	12705V	CHECK VALVE
12	1	12710V	O'RING FOR SEAL ASSY
13	4	12717V	O'RING FOR SCREW HD
14	1	12703A	POLY PUMP REAR BRKT
15	4	12715A	5/16-24 X 1 3/4 HHCS
16	2	12725	#6 X 1/2" PPH SMS
17	1	12765A	5/16-24 X 1 1/8 HFS
18	1	12900	#10 X 1 1/2 PPH SMS
19	4	12901	5/16" FLAT WASHER
20	1	12733V	POLY PUMP SEAL ASSY
21	1	12712AV	2" PUMP BODY
22	1	12772	5 VANE IMPELLER
23	1	E5H	5.5HP HONDA ENGINE
24	1	12716	SLINGER

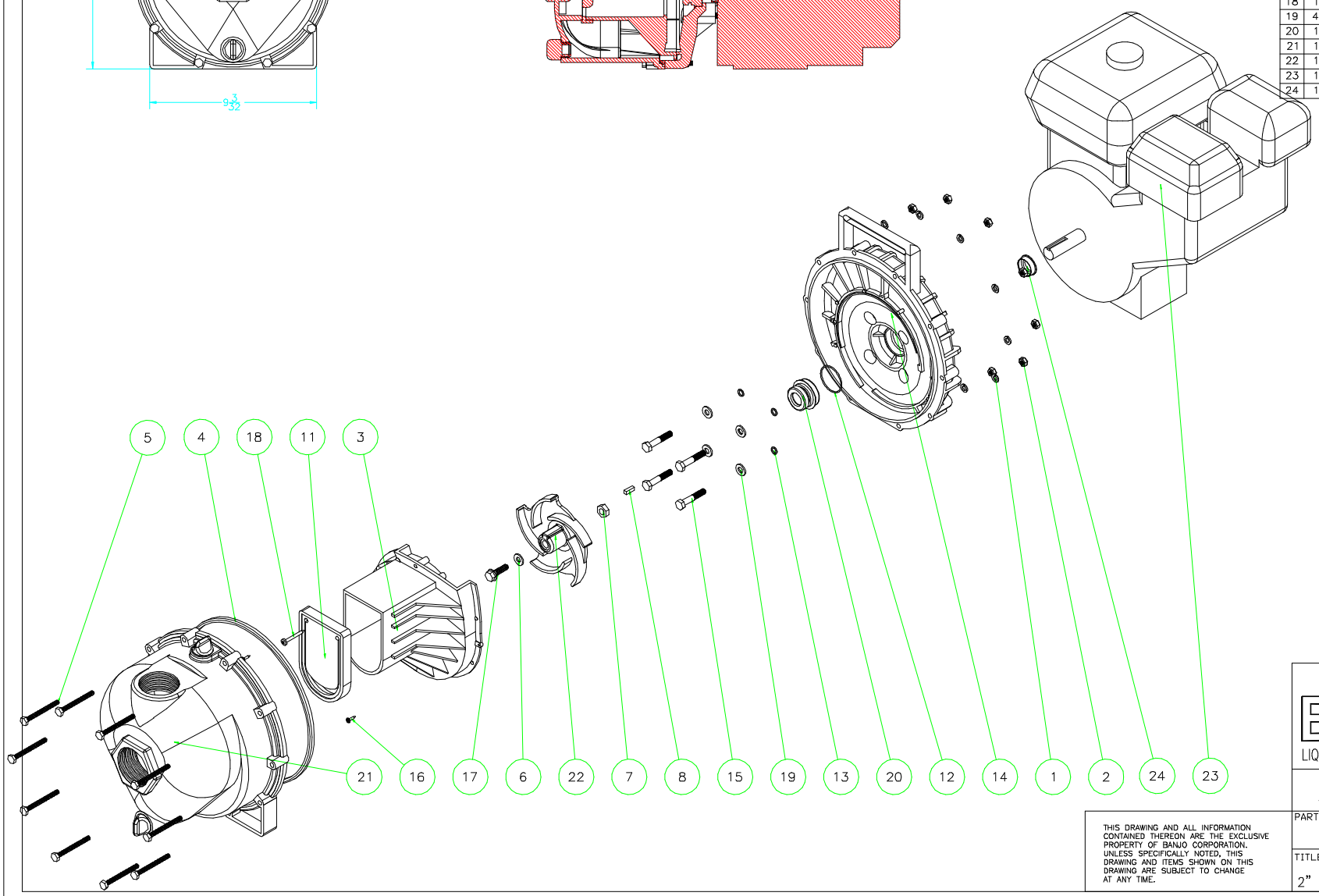

THIS DRAWING AND ALL INFORMATION CONTAINED THEREON ARE THE EXCLUSIVE PROPERTY OF BANJO CORPORATION. UNLESS SPECIFICALLY NOTED, THIS DRAWING AND ITEMS SHOWN ON THIS DRAWING ARE SUBJECT TO CHANGE AT ANY TIME.

BANJO®
LIQUID HANDLING PRODUCTS

BANJO CORPORATION
150 BANJO DR. * CRAWFORDSVILLE, IN 47933

PART NO.
200PH-5V

TITLE
2" POLY PUMP W/ 5.5HP HONDA ENGINE