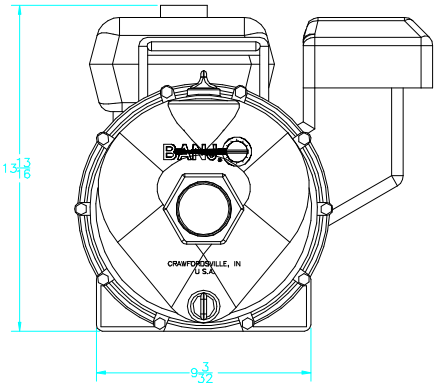

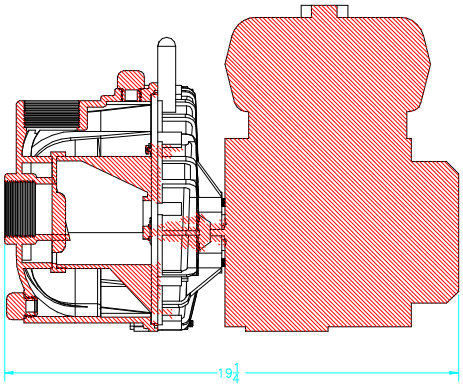

Parts List			
Item	Qty	PART NO.	DESCRIPTION
1	10	V07018	1/4" LOCKWASHER
2	10	V07019	1/4" NUT
3	1	12702A	POLY PUMP VOLUTE
4	1	12703A	POLY PUMP REAR BRKT
5	1	12705	CHECK VALVE
6	1	12710	O'RING SEAL ASSEMBLY
7	1	12716	PUMP SLINGER
8	4	12717	O'RING FOR SCREW HD
9	1	12719A	BODY O'RING
10	10	12720	BODY SCREW
11	1	12765A	5/16-24 X 1 1/8 HFS
12	1	12772	5 VANE IMPELLER
13	1	12774VA	IMPELLER BOLT GASKET
14	1	12775A	7/16-14 HEX NUT 5/8"
15	4	12901	5/16" FLAT WASHER
16	1	12902A	3/16X3/16X5/8 KEY
17	1	12754	O'RING SEGMENT (N/S)
18	1	12910	DECAL (N/S)
19	2	12725	#6 X 1/2" PPH SMS
20	1	12900	#10 X 1/2" PPH SMS
21	1	12712A	2" POLY PUMP BODY
22	4	12715A	5/16-24 X 1 3/4 HHCS
23	1	12733	EPDM SEAL ASSEMBLY
24	1	E5HE	5HP HONDA ELEC START

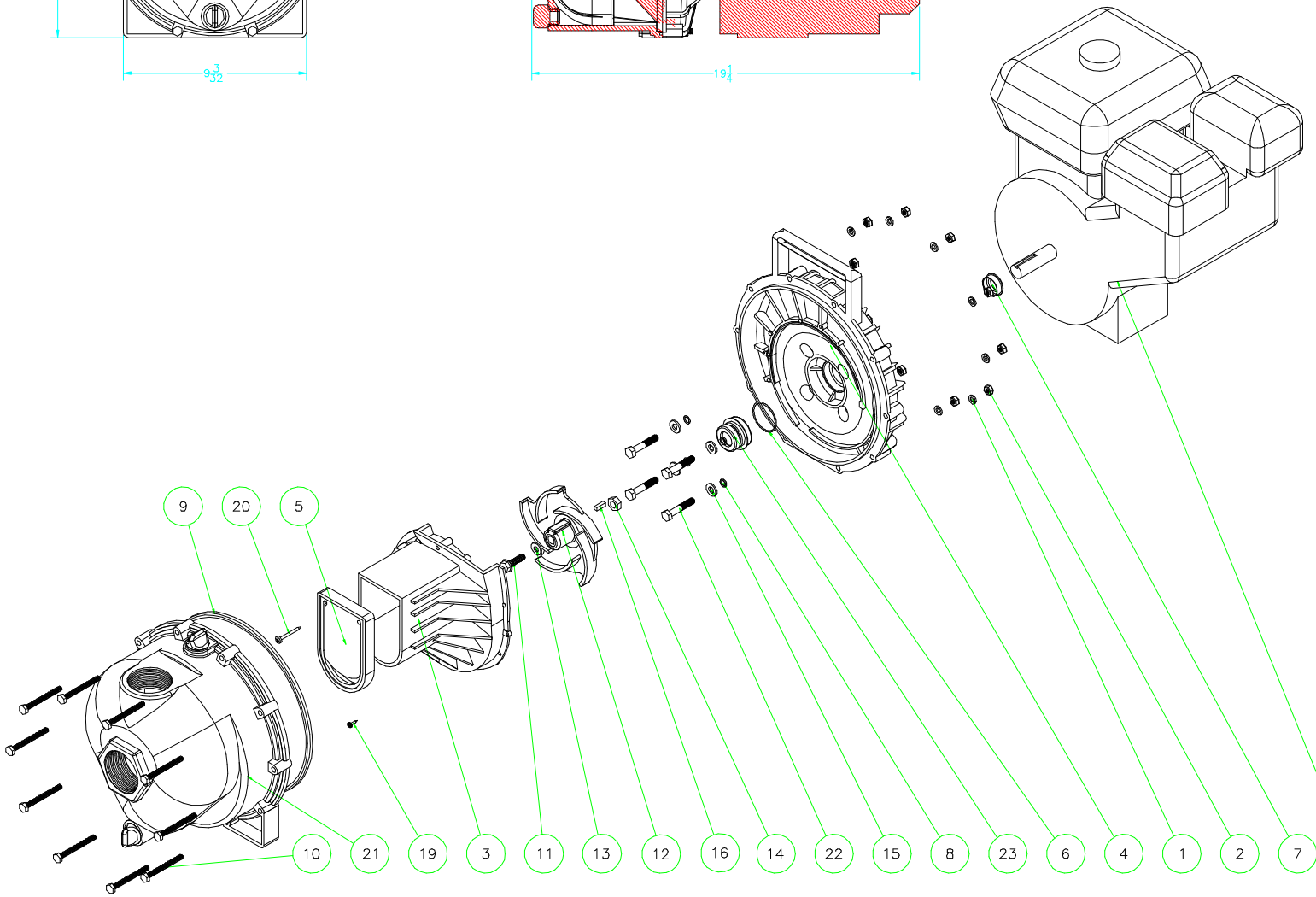

BANJO
LIQUID HANDLING PRODUCTS®

BANJO CORPORATION
150 BANJO DR. * CRAWFORDSVILLE, IN 47933

THIS DRAWING AND ALL INFORMATION CONTAINED THEREON ARE THE EXCLUSIVE PROPERTY OF BANJO CORPORATION. UNLESS SPECIFICALLY NOTED, THIS DRAWING AND ITEMS SHOWN ON THIS DRAWING ARE SUBJECT TO CHANGE AT ANY TIME.

PART NO.
200PH-5E

TITLE
2" POLY PUMP W/ 5HP HONDA ENGINE W/ ELEC. START