Parts List			
Item	Qty	PART NO.	DESCRIPTION
1	1	100G	GASKET
2	2	100P	PIN
3	1	100DECAL	BANJO LOGO DECAL
4	1	125DXM	1" X 1 1/4" MNPT
5	2	100K	CAM ARM ASSEMBLY

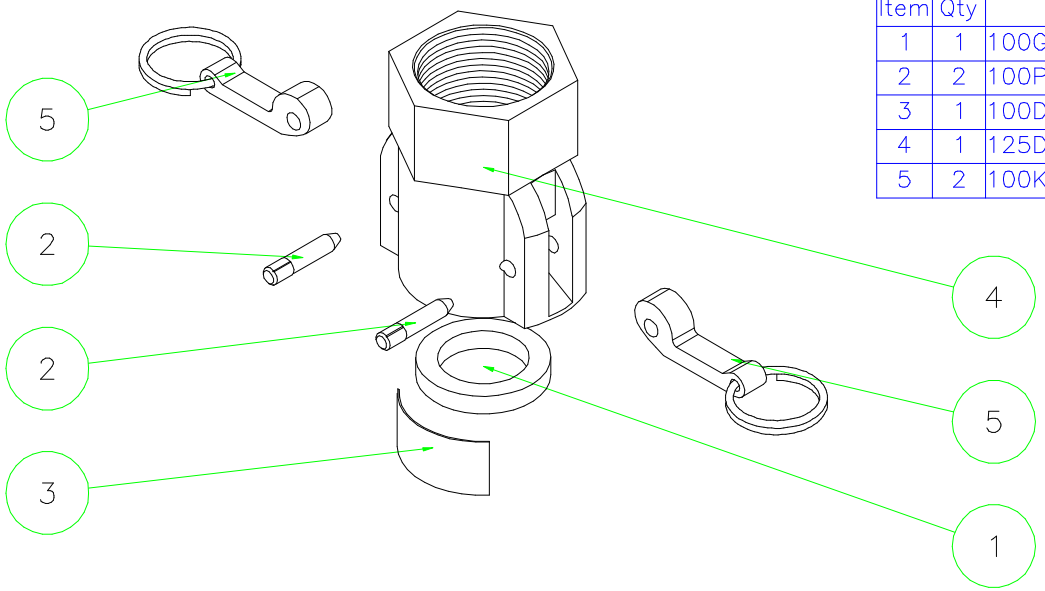

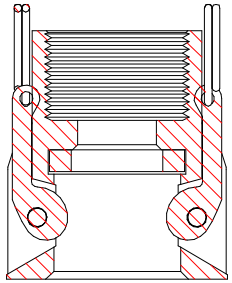

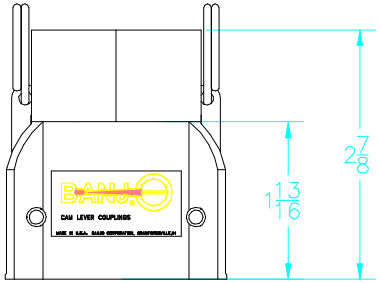

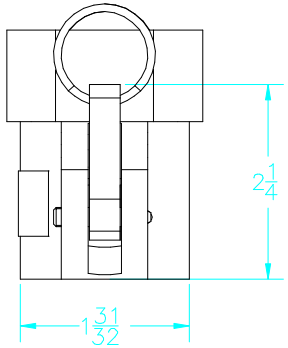

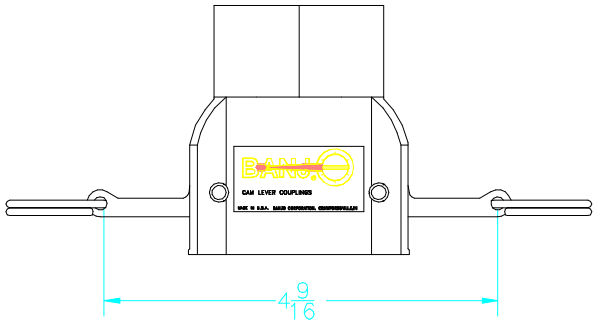

THIS DRAWING AND ALL INFORMATION CONTAINED THEREON ARE THE EXCLUSIVE PROPERTY OF BANJO CORPORATION. UNLESS SPECIFICALLY NOTED, THIS DRAWING AND ITEMS SHOWN ON THIS DRAWING ARE SUBJECT TO CHANGE AT ANY TIME.

BANJO® LIQUID HANDLING PRODUCTS

BANJO CORPORATION
150 BANJO DR. * CRAWFORDSVILLE, IN 47933

PART NO.
125D

TITLE
1" COUPLER X 1 1/4" FEMALE THD