NIBCO
AHEAD OF THE FLOW™

CIRCUIT BALANCING VALVE
S1709

APPLICATIONS

- Globe style balancing • Globe style balancing valve for use in HVAC and plumbing systems
- Balanced system ensures a comfortable indoor climate
- Balancing valves provide desired flow distribution throughout the system
- Optimum system performance provides energy and cost efficiencies.

MATERIALS & CONSTRUCTION

- Dezincification resistant brass body, bonnet and trim
- Two integral test ports
- Memory stop feature

DESIGN CRITERIA

- ANSI B16.18 (Solder ends)

Dezincification Resistant

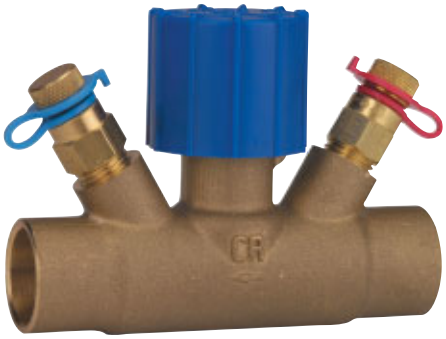

S1709

Unique features of the NIBCO S1709 straight pattern globe gives improved flow measurement accuracy and lower head loss characteristics compared to “Y” pattern globes, ball and plug style balancing valves.

DZR Brass Circuit Balancing Valves

Straight Pattern Globe • Fitted with 2 Test Points for Differential Pressure Measurement • Integral Memory Stop

Rated 125 psi to 175°F (max. 250°F at 85 psi)

Material List

PART	SPECIFICATION
1. Body	DZR Metal
2. Handwheel	Polymer
3. Stem including Disk	DZR Metal
4. Stem Seals	EPDM
5. Stem Retainer	Brass
6. Test Point	Fig. 631

DIMENSIONS — WEIGHTS — QUANTITIES

Size		A		B		C		D		T1709	
in	mm	in	mm	in	mm	in	mm	in	mm	lbs	kg
1/2	15	3.63	92.0	2.56	65.0	0.56	14.3	1.53	38.9	0.83	.38
3/4	20	4.00	101.6	2.56	65.0	0.56	14.3	1.53	38.9	0.88	.40

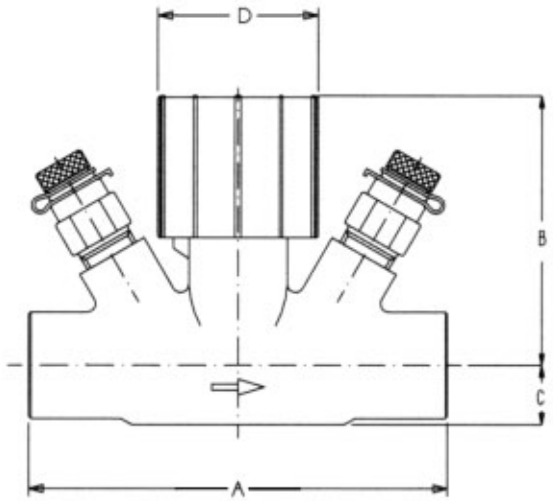

S1709

Presetting

Using the flow coefficient information the valve can be pre-set to a given Cv value:

- Operate counter-clockwise until the required set position is aligned with the fixed stop.
- Without changing the stem position remove the handwheel and refit the memory stop aligned adjacent to the fixed stop on the clockwise side when viewed from above.
- Refit the handwheel retaining screw.
- The valve can be closed and re-opened to the pre-set position.

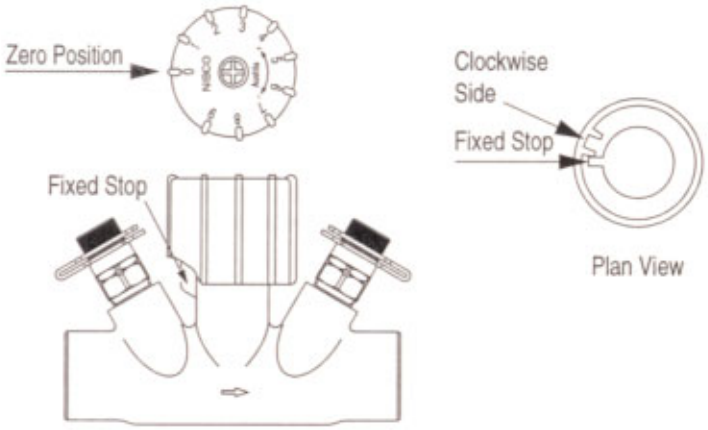

Dezincification Resistant

De-alloying corrosion, known as “Dezincification,” was effectively eradicated from valve products in the 1950’s. Today, however, this problem has returned with the increased use of high-zinc alloys (commonly referred to as ‘Yellow Brass’) in forged and cast valves typically produced outside the United States.

Dezincification selectively removes zinc from the alloy, leaving behind a porous, copper-rich structure that has little mechanical strength. The physical attributes of an in-service valve with Dezincification includes a white powdery substance or mineral stains on its exterior surface. As a standard NIBCO bronze/brass balancing valves are made to be “Dezincification Resistant,” which is a seal of quality and longevity.

DZR Brass Circuit Balancing Valves

Engineering Data — 1/2" S1709

Graph of signal against Flow Rate
Velocity based on inside diameter of 1/2" Type L copper water tube

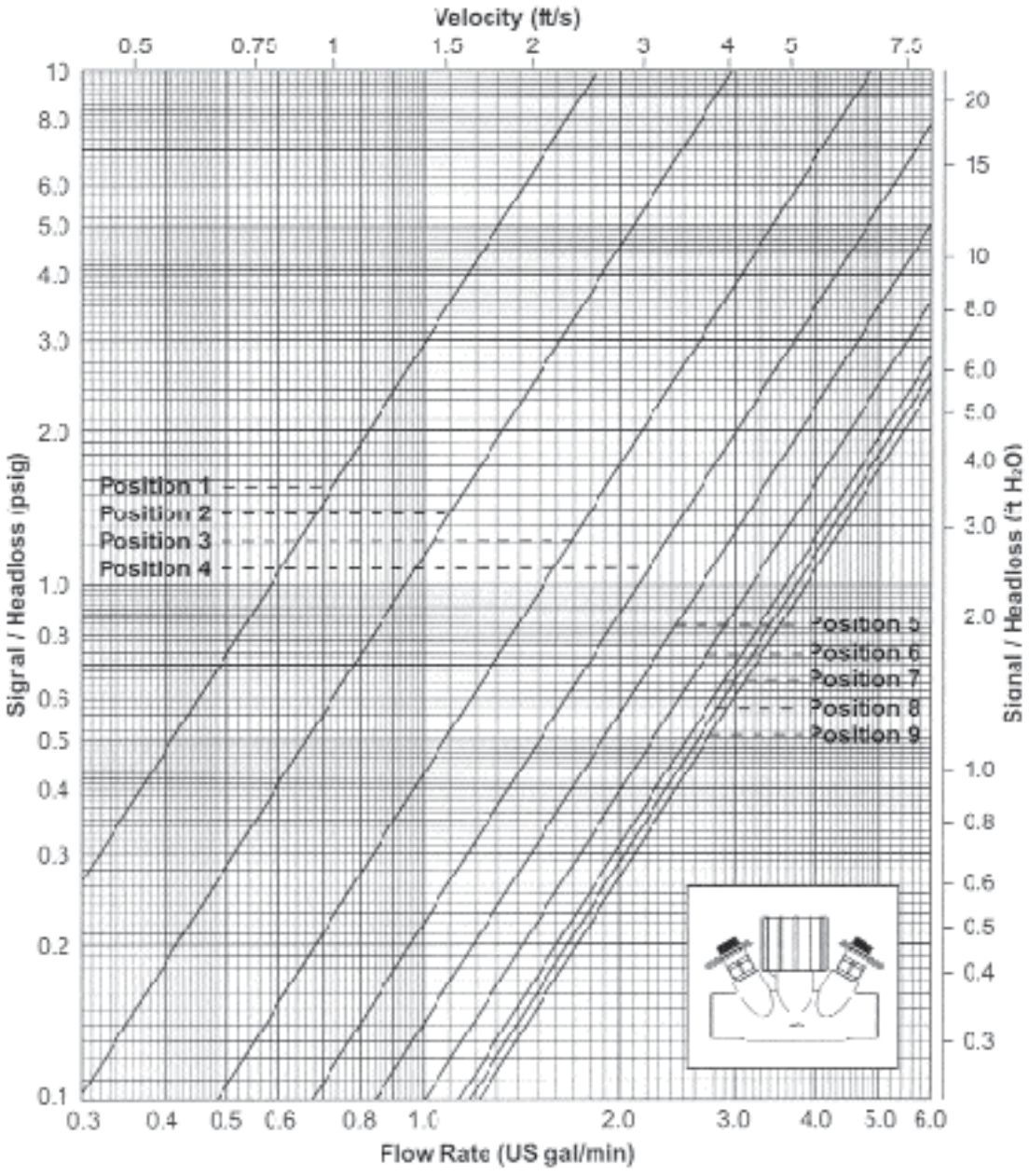

Position Open	9	8	7	6	5	4	3	2	1
C_{VS}	3.82	3.71	3.55	3.18	2.66	2.13	1.52	0.94	0.58

NIBCO INC.
WORLD HEADQUARTERS
WEB: www.nibco.com

1516 MIDDLEBURY STREET
ELKHART, IN 46516-4740
USA

DOMESTIC CUSTOMER SERVICE
PHONE: 800.234.0227
FAX: 800.234.0557

TECHNICAL SERVICE
PHONE: 888.446.4226
FAX: 888.336.4226

INTERNATIONAL OFFICE
PHONE: +1/574.295.3327
FAX: +1/574.295.3455

Engineering Data — 3/4" S1709

Graph of signal against Flow Rate
Velocity based on inside diameter of 3/4" Type L copper water tube

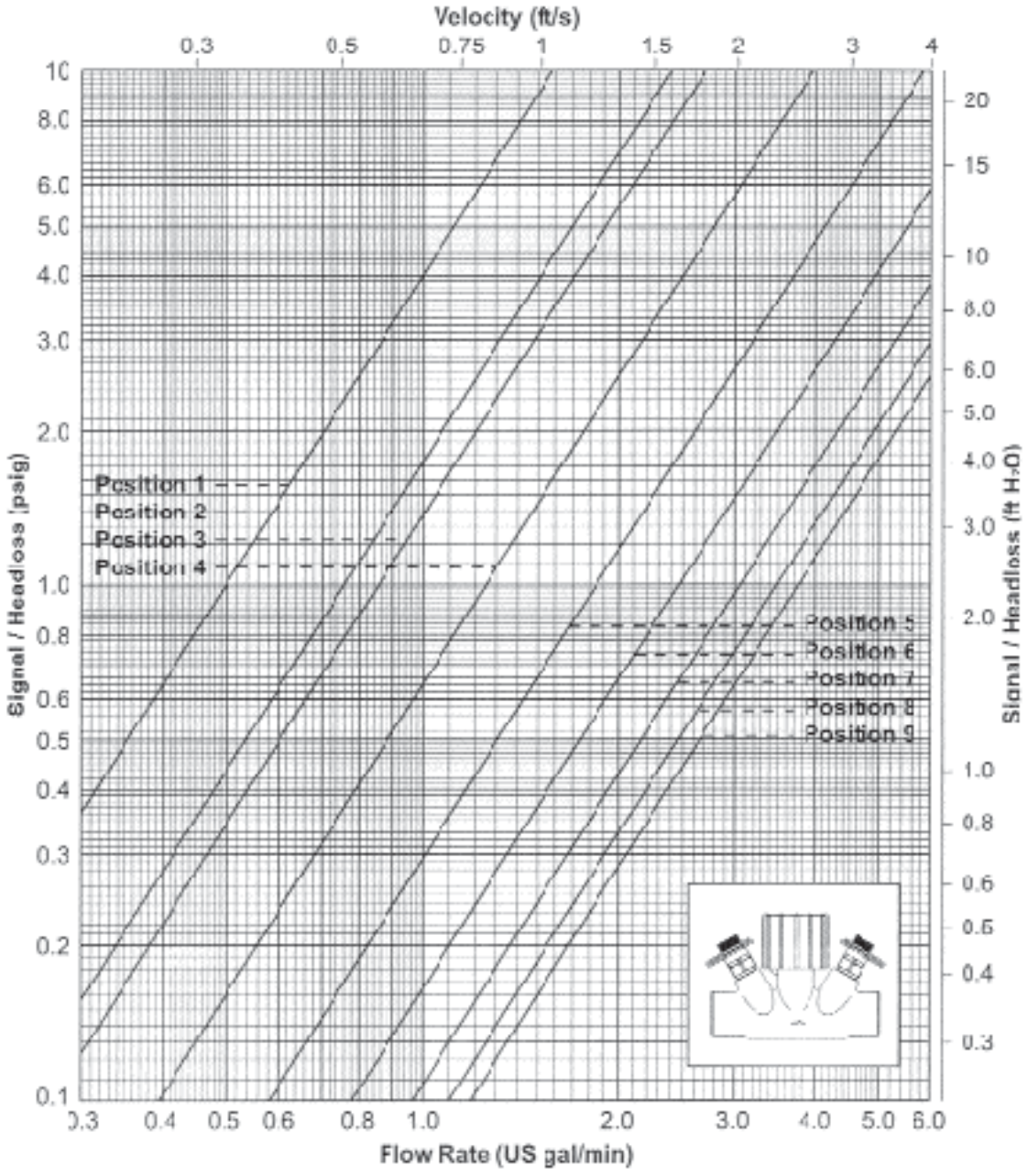

Position Open	9	8	7	6	5	4	3	2	1
C_{VS}	3.76	3.48	3.05	2.47	1.84	1.25	0.86	0.76	0.50

NIBCO INC.
WORLD HEADQUARTERS
WEB: www.nibco.com

1516 MIDDLEBURY STREET
ELKHART, IN 46516-4740
USA

DOMESTIC CUSTOMER SERVICE
PHONE: 800.234.0227
FAX: 800.234.0557

TECHNICAL SERVICE
PHONE: 888.446.4226
FAX: 888.336.4226

INTERNATIONAL OFFICE
PHONE: +1/574.295.3327
FAX: +1/574.295.3455