Your Peace of Mind is Our Top Priority®

Product information presented here reflects conditions at time of publication. Consult factory regarding discrepancies or inconsistencies.

ZOELLER®
PUMP COMPANY
Zoeller Family of Water Solutions™

MAIL TO: *P.O. BOX 16347 • Louisville, KY 40256-0347*
SHIP TO: *3649 Cane Run Road • Louisville, KY 40211-1961*
(502) 778-2731 • 1 (800) 928-PUMP • FAX (502) 774-3624

SECTION: 6.10.407
FM2435
0112/2
Supersedes
0112

visit our web site:
www.zoeller.com

REPLACEMENT PARTS LIST FOR GRINDER MODELS:

E810 NONAUTOMATIC 230V 1PH

Consult factory for all other models

TO ORDER REPLACEMENT PARTS:

PLEASE FURNISH THE FOLLOWING INFORMATION:

- Model Number.
- Part Number of Pump.
- Part Number and Description of part.

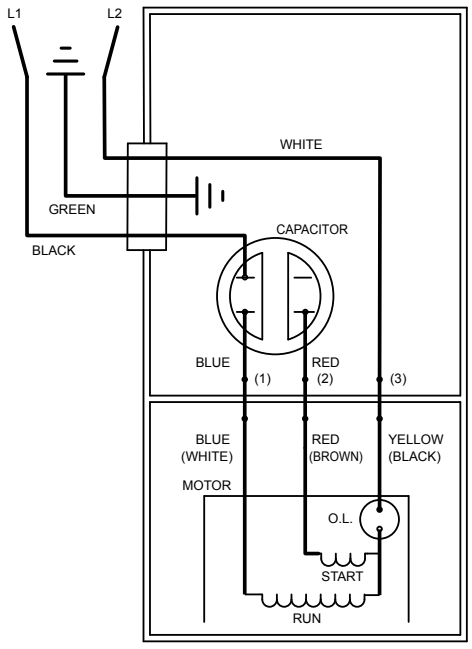

002397

WIRING DIAGRAM FOR MODELS
"E810-A" and "E810-B"
8/06 thru Current

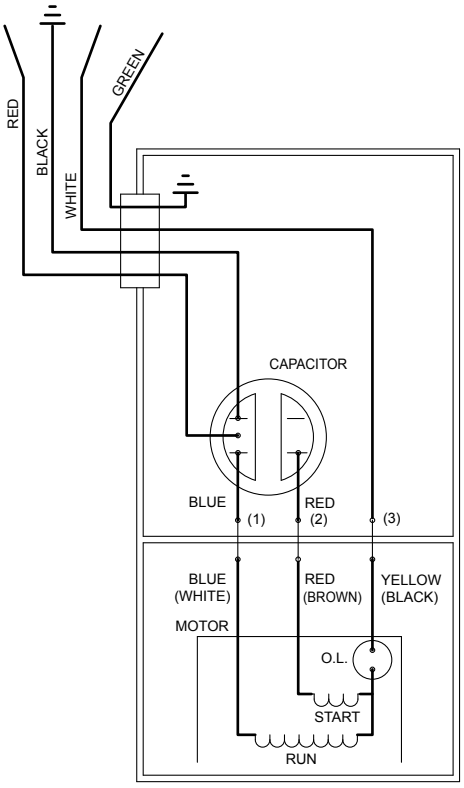

018929

WIRING DIAGRAM FOR MODELS
"E810-A" and "E810-B"
Manual Run Option
4/07 thru Current

© Copyright 2012 Zoeller Co. All rights reserved.

REPLACEMENT PARTS LIST FOR MODEL “E810”.

See back page for illustration.

					MODELS:	E810-A	E810-B	E810-C
REF NO.		DESCRIPTION	QTY	NOTES		8/06 thru 8/07	9/07 thru 12/07	1/08 thru Current
1	•	HANDLE	1			217069	217069	217069
2		COVER & CORD	1	2		018906	018906	018906
3		CORD, TERM & SEAL ASM	1	2		018907	018907	018907
4	•	SEAL, CORD-ASM & STR RLF	1	2		094032	094032	094032
5		COVER-MACH.	1			001077	001077	001077
6	•	GASKET, CASE/COVER	1			001011	001011	001011
7	•	WIRE PKG.	1			011092	011092	011092
8		CAPACITOR & CLAMP ASM	1			006135	006135	006135
9	•	PLUG, TEST	2			015023	015023	015023
10	•	SEAL, THRU WALL TERM	3			003402	003402	003402
11		HOUSING, MTR-& STR	1	1		018908	018908	018908
12	•	SPRING, BEARING PRELOAD	1			017192	017192	017192
13	•	BEARING, UPPER 6201	1			006703	006703	006703
14		ROTOR & BRG ASM	1			018910	018910	018910
15	•	KEY	1			017893	017893	017893
16	•	BEARING, LOWER 6204	1			012544	012544	012544
17	•	SEAL, MTR HSG	1			001014	001014	001014
18	•	OIL, DIELECTRIC-(57 OZ CAN)	1			009051	009051	009051
19		ADAPTER-MACH.	1			017891	017891	017891
20	•	SEAL, SHAFT	1			018912	018912	018912
21	•	WASHER, SEAL LOCATING & SNAP RING	1			018913	018913	018913
22		ROTOR, PUMP-HYDRAULIC & PIN	1			018914	018915	018915
23	•	PIN	1			017892	018892	018892
24	•	SEAL, PUMP HOUSING	1			017894	017894	017894
25		HOUSING, PUMP-MACH. & PRESS. RLF VALVE	1			018916	018916	019550
26		LEG, WIREFORM	2			017841	017841	017841
27		VALVE, PRESSURE RELIEF	1			018432	018432	018432
28		STATOR, HYDRAULIC	1			017476	017476	017476
29	•	INSERT, STATOR SS	6			018369	018369	018369
30		CUTTER & DISC ASM 810/815	1			018918	018918	018918
31		SHIM SET	1			012632	012632	012632
32		CLAMP, STRAIN RELIEF-RED	1			001770	001770	001770
33	•	SCREW, .25-20 X .75 HHM-SS	4			001916	001916	001916
34	•	SCREW, #6-32 X .25 RHM SL TC STLGR	3			001877	001877	001877
35	•	SCREW, .25-20 X 1 HHM-SS	4			007790	007790	007790
36	•	SCREW, .313-18 X 2 HH CAP FULL THREAD/SS	4			018186	018186	018186
37	•	WASHER, FLAT-SS .313	4			015914	015914	015914
38	•	NUT, .313-18 H–SS	4			001813	001813	001813
39	•	WASHER, RETAINING SS	1			008533	008533	008533
40	•	SCREW, .25-20 X .75 HH SS (NYLOCK)	1			009545	009545	009545
41	•	WASHER, FLAT-SS .25	6			004480	004480	004480
42	•	SCREW, .25-20 X 1.125 SH CAP SS	6			018387	018387	018387
43		DISC, CUTTER	1			010407	010407	010407
44		CUTTER/SHIM ASM/3 BLADE	1			019695	019695	019695
¤		REBUILD KIT				018919	018920	018920

• Items included in Rebuild Kit. ¤ Not Shown in Illustration.

NOTES:

1) Mtr. Hsg, Stator & Term. (Item 11) is preassembled at the factory and must be replaced as a unit. Stator is permanently attached to the Motor Housing. Plug (Item 9) and Seal, Thru Wall Term. (Item 10) are replaceable.
2) If an “X” follows Model No., or Date Mfg. on brass ID tag, consult factory for ordering of this part.
3) See FM0160 Parts Price Sheet for listing of parts prices.
4) “N/A” indicates, not applicable.

© Copyright 2012 Zoeller Co. All rights reserved.

REPLACEMENT PARTS LIST FOR MODEL "E810" MANUAL RUN OPTION.

See back page for illustration.

					MODELS:	E810-A	E810-B	E810-C
REF NO.		DESCRIPTION	QTY	NOTES		4/07 thru 8/07	9/07 thru 12/07	1/08 thru Current
1	•	HANDLE	1			217069	217069	217069
2		COVER & CORD	1	2		018927	018927	018927
3		CORD, TERM & SEAL ASM	1	2		018928	018928	018928
4	•	SEAL, CORD-ASM & STR RLF	1	2		094032	094032	094032
5		COVER-MACH.	1			001077	001077	001077
6	•	GASKET, CASE/COVER	1			001011	001011	001011
7	•	WIRE PKG.	1			011092	011092	011092
8		CAPACITOR & CLAMP ASM	1			006135	006135	006135
9	•	PLUG, TEST	2			015023	015023	015023
10	•	SEAL, THRU WALL TERM	3			003402	003402	003402
11		HOUSING, MTR-& STR	1	1		018908	018908	018908
12	•	SPRING, BEARING PRELOAD	1			017192	017192	017192
13	•	BEARING, UPPER 6201	1			006703	006703	006703
14		ROTOR & BRG ASM	1			018910	018910	018910
15	•	KEY	1			017893	017893	017893
16	•	BEARING, LOWER 6204	1			012544	012544	012544
17	•	SEAL, MTR HSG	1			001014	001014	001014
18	•	OIL, DIELECTRIC-(57 OZ CAN)	1			009051	009051	009051
19		ADAPTER-MACH.	1			017891	017891	017891
20	•	SEAL, SHAFT	1			018912	018912	018912
21	•	WASHER, SEAL LOCATING & SNAP RING	1			018913	018913	018913
22		ROTOR, PUMP-HYDRAULIC & PIN	1			018914	018915	018915
23	•	PIN	1			017892	018892	018892
24	•	SEAL, PUMP HOUSING	1			017894	017894	017894
25		HOUSING, PUMP-MACH. & PRESS. RLF VALVE	1			018916	018916	019550
26		LEG, WIREFORM	2			017841	017841	017841
27		VALVE, PRESSURE RELIEF	1			018432	018432	018432
28		STATOR, HYDRAULIC	1			017476	017476	017476
29	•	INSERT, STATOR SS	6			018369	018369	018369
30		CUTTER & DISC ASM 810/815	1			018918	018918	018918
31		SHIM SET	1			012632	012632	012632
32		CLAMP, STRAIN RELIEF-RED	1			001770	001770	001770
33	•	SCREW, .25-20 X .75 HHM-SS	4			001916	001916	001916
34	•	SCREW, #6-32 X .25 RHM SL TC STLGR	3			001877	001877	001877
35	•	SCREW, .25-20 X 1 HHM-SS	4			007790	007790	007790
36	•	SCREW, .313-18 X 2 HH CAP FULL THREAD/SS	4			018186	018186	018186
37	•	WASHER, FLAT-SS .313	4			015914	015914	015914
38	•	NUT, .313-18 H–SS	4			001813	001813	001813
39	•	WASHER, RETAINING SS	1			008533	008533	008533
40	•	SCREW, .25-20 X .75 HH SS (NYLOCK)	1			009545	009545	009545
41	•	WASHER, FLAT-SS .25	6			004480	004480	004480
42	•	SCREW, .25-20 X 1.125 SH CAP SS	6			018387	018387	018387
43		DISC, CUTTER	1			010407	010407	010407
44		CUTTER/SHIM ASM/3 BLADE	1			019695	019695	019695
¤		REBUILD KIT				018919	018920	018920

• Items included in Rebuild Kit. ¤ Not Shown in Illustration.

NOTES:

1) Mtr. Hsg, Stator & Term. (Item 11) is preassembled at the factory and must be replaced as a unit. Stator is permanently attached to the Motor Housing. Plug (Item 9) and Seal, Thru Wall Term. (Item 10) are replaceable.
2) If an "X" follows Model No., or Date Mfg. on brass ID tag, consult factory for ordering of this part.
3) See FM0160 Parts Price Sheet for listing of parts prices.
4) "N/A" indicates, not applicable.

© Copyright 2012 Zoeller Co. All rights reserved.

REPLACEMENT PARTS ILLUSTRATION FOR 810 - ALL MODELS

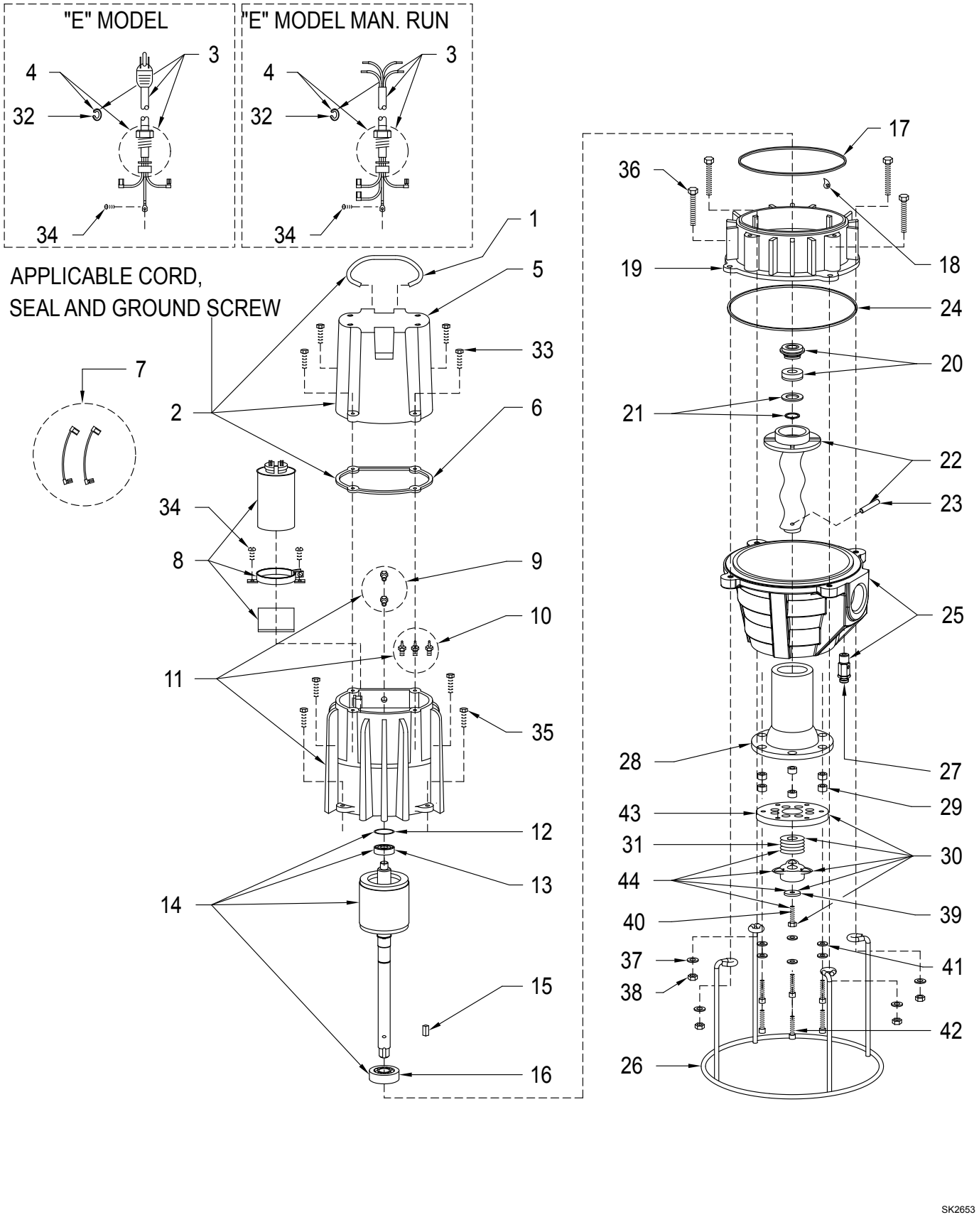

© Copyright 2012 Zoeller Co. All rights reserved.