NOTICE TO INSTALLER: Instructions must remain with installation.

SECTION: 6.10.025
FM2458
0610
Supersedes
0809

"Quality Pumps Since 1939"

Product information presented here reflects conditions at time of publication. Consult factory regarding discrepancies or inconsistencies.

visit our web site:
www.zoeller.com

MAIL TO: P.O. BOX 16347 • Louisville, KY 40256-0347
SHIP TO: 3649 Cane Run Road • Louisville, KY 40211-1961
(502) 778-2731 • 1 (800) 928-PUMP • FAX (502) 774-3624

OWNER'S MANUAL

MODELS 810 & 815 SUBMERSIBLE GRINDER UNITS

Congratulations on the purchase of a Zoeller submersible progressing cavity grinder pump. For over sixty years the name Zoeller has represented the standard for submersible dewatering and sewage pumps. The same high quality workmanship and easy maintenance design has been incorporated into this line of heavy-duty submersible progressing cavity grinder pumps. This Zoeller pump will provide years of trouble-free service when installed according to the manufacturer's recommendations.

This manual incorporates the installation, operation, maintenance, and service instructions into one document to aid in the ownership of a Zoeller submersible wastewater product. Please read and review this manual before installing the product. Follow the steps in this manual for a proper start-up. Many items contained within, when followed correctly, will not only ensure a long and problem-free life for the pump, but also save time and money during installation. Reference FM2435 and FM2436 for replacement parts on 810 and 815 Series Progressing Cavity Grinder Pumps respectively. Should further assistance be necessary please call our Technical Service Department at 1-800-928-PUMP (7867).

Table of Contents

Safety Instructions 1
Limited Warranty, Checklist and Application 2-3
General Information 3
Pump Wiring Instructions 4
Typical Outdoor Prepackaged System 5
Installation and Operation Instructions 6
Maintenance 7
Service Checklist 8

Owner's Information

Model Number: _____ Date Code: _____

☐ Simplex ☐ Duplex

☐ Packaged System ☐ Field Assembled System

Job Name: _____

Distributor: _____

Date of Purchase: _____ Zoeller S/O No.: _____

Contractor: _____

Date of Installation: _____

System Readings During Start-up: Voltage _____ Amps _____

Safety Instructions

TO AVOID SERIOUS OR FATAL PERSONAL INJURY OR MAJOR PROPERTY DAMAGE, READ AND FOLLOW ALL SAFETY INSTRUCTIONS IN THIS MANUAL AND ON THE PUMP.

THIS MANUAL IS INTENDED TO ASSIST IN THE INSTALLATION AND OPERATION OF THIS UNIT AND MUST BE KEPT WITH THE PUMP.



This is a SAFETY ALERT SYMBOL. When you see this symbol on the pump or in the manual, look for one of the following signal words and be alert to the potential for personal injury or property damage.

⚠ DANGER — Warns of hazards that WILL cause serious personal injury, death or major property damage.

⚠ WARNING — Warns of hazards that CAN cause serious personal injury, death or major property damage.

⚠ CAUTION — Warns of hazards that CAN cause personal injury or property damage.

⚠ NOTICE — INDICATES SPECIAL INSTRUCTIONS WHICH ARE VERY IMPORTANT AND MUST BE FOLLOWED.

THOROUGHLY REVIEW ALL INSTRUCTIONS AND WARNINGS PRIOR TO PERFORMING ANY WORK ON THIS PUMP.

MAINTAIN ALL SAFETY DECALS.

REFER TO WARRANTY ON PAGE 2.

© Copyright 2010 Zoeller Co. All rights reserved.

Limited Warranty

Manufacturer warrants, to the purchaser and subsequent owner during the warranty period, every new product to be free from defects in material and workmanship under normal use and service, when properly used and maintained, for a period of one year from date of purchase by the end user, or 18 months from date of original manufacture of the product, whichever comes first. Parts that fail within the warranty period, one year from date of purchase by the end user, or 18 months from the date of original manufacture of the product, whichever comes first, that inspections determine to be defective in material or workmanship, will be repaired, replaced or remanufactured at Manufacturer's option, provided however, that by so doing we will not be obligated to replace an entire assembly, the entire mechanism or the complete unit. No allowance will be made for shipping charges, damages, labor or other charges that may occur due to product failure, repair or replacement.

This warranty does not apply to and there shall be no warranty for any material or product that has been disassembled without prior approval of Manufacturer, subjected to misuse, misapplication, neglect, alteration, accident or act of God; that has not been installed, operated or maintained in accordance with Manufacturer's installation instructions; that has been exposed to outside substances including but not limited to the following: sand, gravel, cement, mud, tar, hydrocarbons, hydrocarbon derivatives (oil, gasoline, solvents, etc.), or other abrasive or corrosive substances, wash towels or feminine sanitary products, etc. in all applications other than in raw sewage pumping applications. The warranty set out in the paragraph above is in lieu of all other warranties expressed or implied; and we do not authorize any representative or other person to assume for us any other liability in connection with our products.

Contact Manufacturer at, 3649 Cane Run Road, Louisville, Kentucky 40211, Attention: Customer Service Department to obtain any needed repair or replacement of part(s) or additional information pertaining to our warranty.

MANUFACTURER EXPRESSLY DISCLAIMS LIABILITY FOR SPECIAL, CONSEQUENTIAL OR INCIDENTAL DAMAGES OR BREACH OF EXPRESSED OR IMPLIED WARRANTY; AND ANY IMPLIED WARRANTY OF FITNESS FOR A PARTICULAR PURPOSE AND OF MERCHANTABILITY SHALL BE LIMITED TO THE DURATION OF THE EXPRESSED WARRANTY.

Some states do not allow limitations on the duration of an implied warranty, so the above limitation may not apply to you. Some states do not allow the exclusion or limitation of incidental or consequential damages, so the above limitation or exclusion may not apply to you.

This warranty gives you specific legal rights and you may also have other rights which vary from state to state.

Preinstallation Checklist

1. **Inspect your progressing cavity grinder pump.** If the unit has been damaged in shipment, contact your dealer before installing. **Do Not** remove the test plug in the cover nor the motor housing.
2. **Carefully read all literature** to familiarize yourself with details regarding installation and use. Retain materials for future reference.



⚠ WARNING **SEE BELOW FOR LIST OF WARNINGS**

1. **Make sure pump connection contains a ground terminal.** The power cord on all Zoeller Progressing Cavity Grinder Pumps contains a green conductor for grounding to help protect you against the possibility of electric shock.
2. **Make certain the electrical service is within reach of the power supply cord**.
3. **Make sure any panels and branch circuits are equipped** with proper size fuses and circuit breakers. An independent power circuit is recommended, sized according to the National Electrical Code, for the current shown on the grinder pump nameplate.
4. **For your protection, always disconnect the power source to the grinder pump before handling.** All grinder pumps must be properly grounded and wired in accordance with the “National Electrical Codes” and all local codes and ordinances.
5. Installation of electrical hardware and checking of control panels and circuits should be performed by a qualified licensed electrician.
6. Risk of electrical shock - These pumps have not been investigated for use in swimming pool areas.
7. According to the state of California (Prop 65), this product contains chemicals known to the state of California to cause cancer and birth defects or other reproductive harm.

⚠ WARNING Progressing cavity grinder pumps are designed for pressure sewer applications. A UL listed and CSA certified pressure relief valve must be installed in the system to prevent excessive pressure buildup.

⚠ CAUTION **SEE BELOW FOR LIST OF CAUTIONS**

1. **Make sure the power source is capable of handling the electrical requirements of the grinder pump, as indicated on the nameplate.**
2. **A disconnect switch should be installed ahead of the pump.**
3. The progressing cavity grinder pumps are operated by variable level float control switches. It is the responsibility of the installing party to see that float control switches will not hang up on the grinder pump or other pit peculiarities and are secured so that the grinder pump will shut off. It is recommended to use rigid pipe and fittings and the pit be at least 24" in diameter for simplex systems and 36" in diameter for duplex systems or larger.
4. Grinder installations should be checked yearly for debris and/or build up which may interfere with the “ON” or “OFF” positions of variable level float control switches. Repair and service, other than cutter assembly maintenance, should be performed by Zoeller Engineered Products authorized service stations only.
5. Maximum operating temperature must not exceed 130°F, (54°C).
6. **Do not operate an unsubmerged progressing cavity pump.** Dry pump operation may damage the hydraulic stator due to lack of lubrication. **Do not run dry.**
7. **To ensure proper pump operation, a swing or flapper style check valve must be installed in the pump discharge line. A faulty or non-functional check valve when combined with a pressure sewer may prevent the pump from starting.**



⚠ WARNING **Do not attempt to turn star cutter located on bottom of the unit with fingers.** Use a wrench when checking or removing star cutter.

Applications

1. Zoeller Progressing Cavity Grinder Pumps are designed for grinding and pumping sanitary sewage from submersible lift stations. The pump is intended to grind and pump reasonable quantities of items normally found in sanitary sewage applications.
2. Zoeller 810 and 815 Progressing Cavity Grinder Pumps can be installed in new applications or as a direct replacement for any grinder application of like size and capacity. Some rail system retrofit kits are available.
3. The 810 and 815 can be installed in a Prepackaged Job Ready System or may be used in a Field Assembled basin package. Page 5 shows a couple of the Prepackaged Systems. Field Assembled Systems are discussed on page 3.
4. Zoeller 810 and 815 Grinder Pumps can be retrofitted to existing positive displacement pump installations.

© Copyright 2010 Zoeller Co. All rights reserved.

Recommended Limits of Application for Progressing Cavity Grinder Pumps

These recommended application limits are for pump stations pumping to a gravity main. Low-pressure collection systems should be designed with a pump located at each house. For applications where a lift station would handle more than 2 homes, consider the 840 or 71 Series grinder pump. For applications where a lift station would handle more than 60 homes, a solids handling type pump should be considered.

		Simplex Station		Duplex Station	
Model	**HP**	**Homes**	**GPD**	**Homes**	**GPD**
810	1	1	400	2	800
815	2	1	400	2	800

General Information

PROGRESSING CAVITY GRINDER PUMP DESCRIPTION

1. Pumps are constructed of class 30 cast iron protected with powder coated epoxy for long life when pumping sewage in submersible applications. The cutter assembly is comprised of stainless steel components hardened to a value of 55-60 on the Rockwell C scale; a star shaped cutter and a precision ground flat disk. Cutting action takes place with the rotation of the star cutter at 1725 RPM against the stationary cutter plate (see page 7).
2. The cutter mechanism on the model 810 & 815 is single directional.
3. Pump motors are single phase. Single phase motors require a run capacitor, which is mounted in the the upper cap of the pump (ref. page 4). The units have an internal thermal overload.
4. The 810 & 815 progressing cavity grinder pumps are single seal.
5. The pressure relief valve provides motor protection under inadvertent shut-off head condition.
6. A progressing cavity grinder pump is an intermittent duty pump designed for pumping sanitary sewage. It is not a dewatering or trash pump.

FIELD ASSEMBLED INSTALLATION

1. Installation and piping instructions are included with the control panel, rail system and basin instructions. If pump is being retrofitted to an existing rail system, accessory parts may be required. Consult the factory and advise make and model of rail system being used.
2. Refer to the appropriate Indoor/Outdoor prepackaged instructions for more information on system installation.
3. All electrical connections including pump to control box and power supply to control panels must comply with the “National Electrical Code” and applicable local codes. Conduit and panel enclosure openings must have a gas-tight seal. Installation of electrical panels and connections should be made by a qualified licensed electrician.
4. A properly sized disconnect switch, supplied by others, shall be installed on the service side of the pump and control panel.

FIGURE 1.

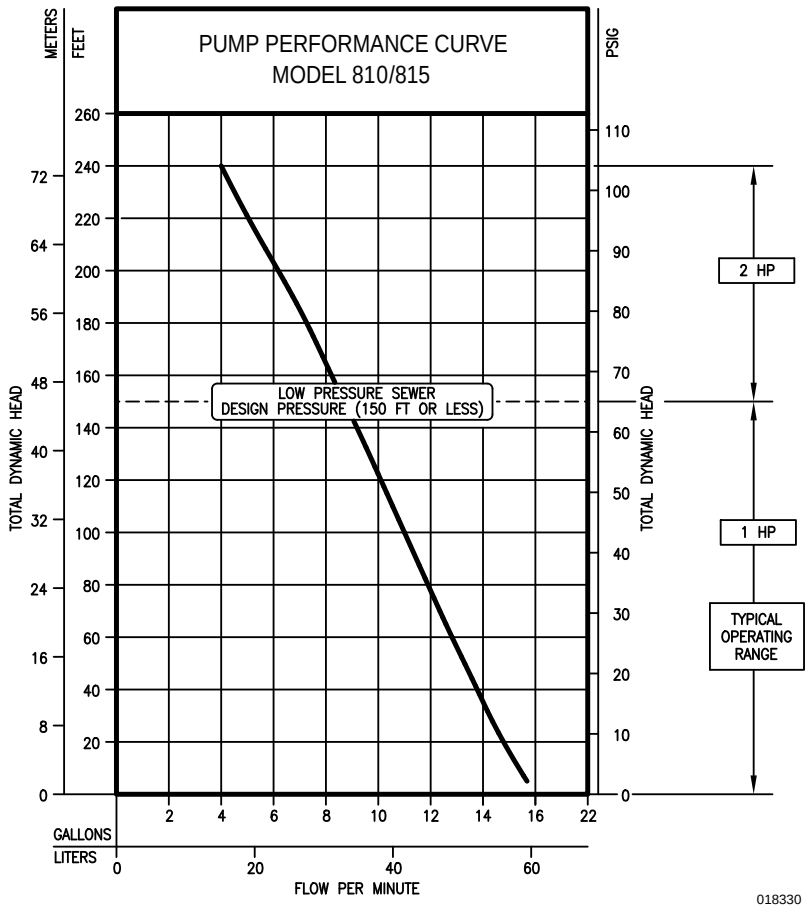

TOTAL DYNAMIC HEAD/FLOW

PER MINUTE

	Feet	Meters	Gal.	Liters
MODEL 810	5	1.5	15.6	59
	10	3.0	15.3	58
	20	6.1	14.7	56
	30	9.1	14.2	54
	40	12.2	13.8	52
	50	15.2	13.2	50
	60	18.3	12.8	48
	70	21.3	12.3	47
	80	24.4	11.9	45
	90	27.4	11.5	44
	100	30.5	11.0	42
	110	33.5	10.5	40
	120	36.6	10.1	38
	130	39.6	9.6	36
	140	42.6	9.2	35
	150	45.7	8.7	33
MODEL 815	160	48.7	8.2	31
	170	51.8	7.8	30
	180	54.8	7.3	28
	190	57.9	6.8	26
	200	60.9	6.2	23
	210	64.0	5.7	22
	220	67.0	5.0	19
	230	70.1	4.5	17
	240	73.1	4.0	15

© Copyright 2010 Zoeller Co. All rights reserved.

Pump Wiring Instructions

⚠ WARNING
⚠ WARNING

FOR YOUR PROTECTION, ALWAYS DISCONNECT THE PUMP FROM ITS POWER SOURCE BEFORE HANDLING. All electrical connections must be wired and grounded in accordance with the National Electrical Code and all applicable local codes and ordinances.

⚠ WARNING
⚠ WARNING

"Risk of electrical shock" Do not remove the power supply cord and strain relief or connect conduit directly to pump. Installation and checking of electrical circuits and hardware should be performed by a qualified licensed electrician.

FIGURE 2. Pump Control Switch Installation

Determining Pumping Range in Inches (1 inch - 2.5 cm)

Tether Length (inches)	5 min.	10 max.
Pumping Range (GPM)	9	13.5

Use only as a guide. Due to weight of cable, pumping range above horizontal is not equal to pumping range below horizontal. Ranges are based on testing in nonturbulent conditions. Range may vary due to water temperature and cord shape. As tether length increases, so does the variance of the pumping range.

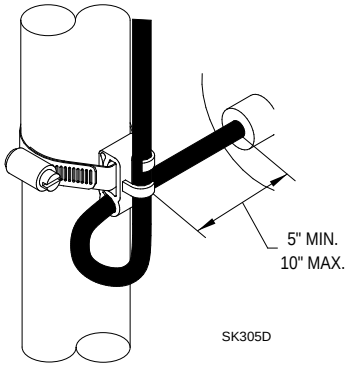

Note: Failure to keep within proper tether limits may prevent reliable switch operation.

Note: Cable must be mounted in horizontal position.

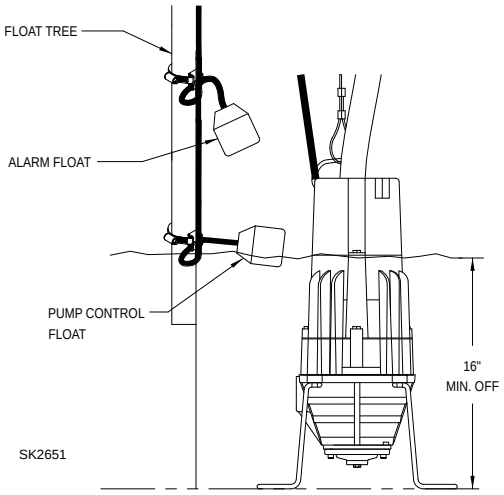

Use the diagram above to secure the float switch properly and obtain the proper tether to customize the on-off cycle to each application. Note the minimum off level shown above. On Prepackaged Systems, the tether length is set at 5".

Electrical Data

						Amps			KVA Code	Winding Resistance Line-to-Line
Model	BHP	RPM	Voltage	Phase	Hertz	Full Load	Shut Off	Locked Rotor		
E810	1	1725	230	1	60	6.0	6.0	24.5	G	2.3 / 2.0*
E815	2	1725	230	1	60	10.5	10.5	44.0	B	1.80 / 1.60*

*Line to line reading from the electrical load will only reflect the run winding resistance. Start winding resistance can only be measured after removing the cover.

FIGURE 3A. Models 810 and 815 Wiring Diagram

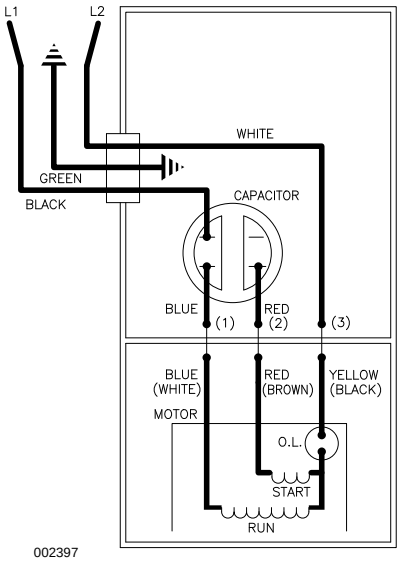

FIGURE 3B. Models 810 and 815 Wiring Diagram (932 Replacement Grinder System)

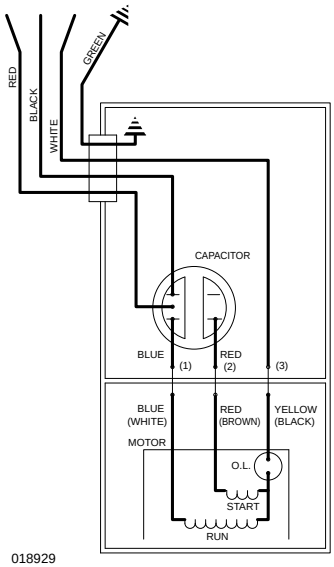

© Copyright 2010 Zoeller Co. All rights reserved.

Typical Outdoor Grinder Pumping System Installations

FIGURE 4A - PACKAGED SYSTEM WITH FLEXIBLE HOSE DISCONNECT

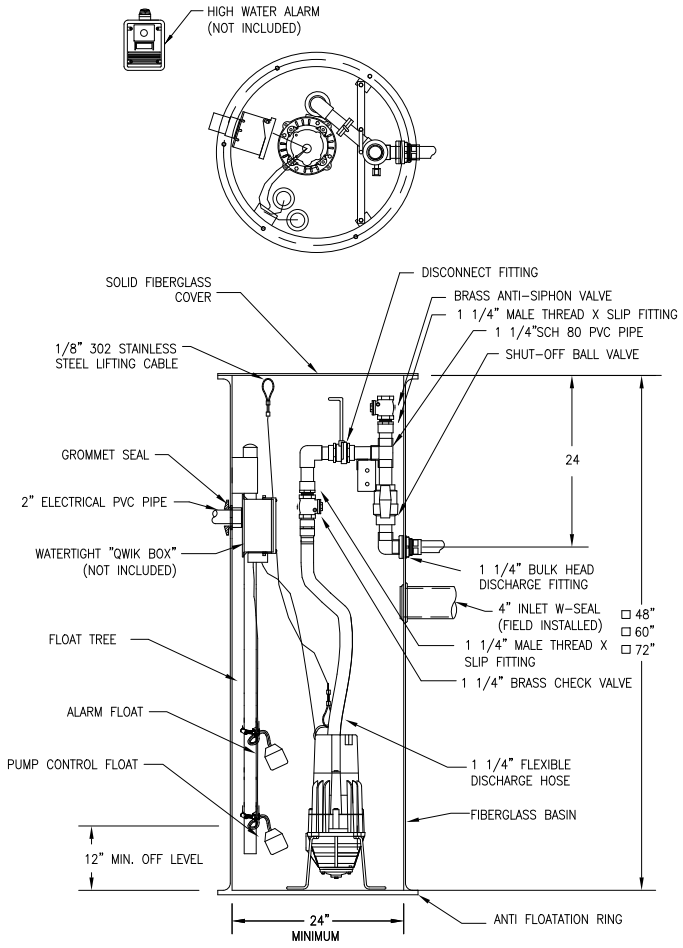

SK2540

FIGURE 4B - PACKAGED SYSTEM WITH SQUARE GUIDE RAIL SYSTEM

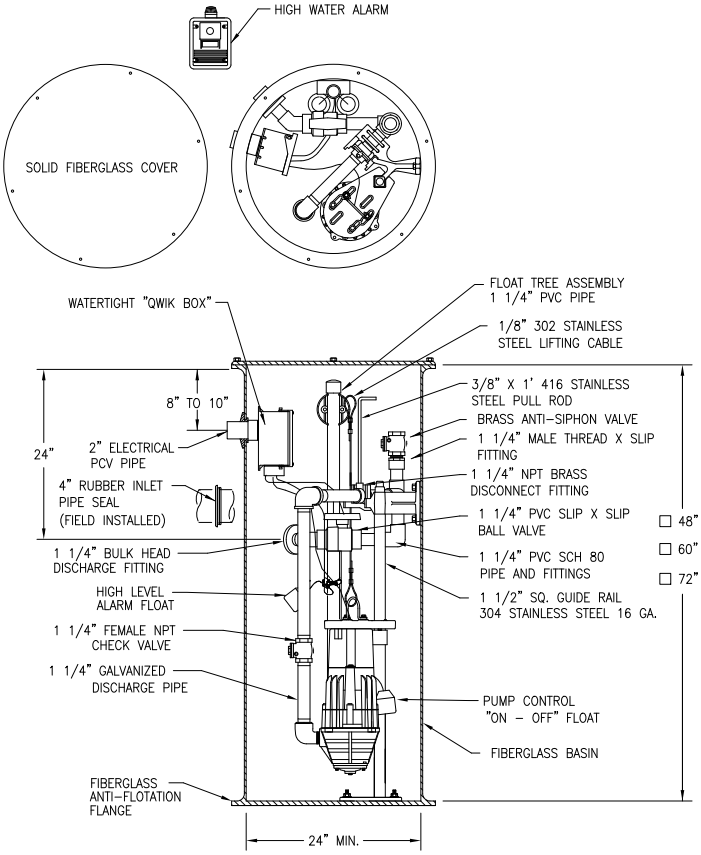

SK2569

FIGURE 5.

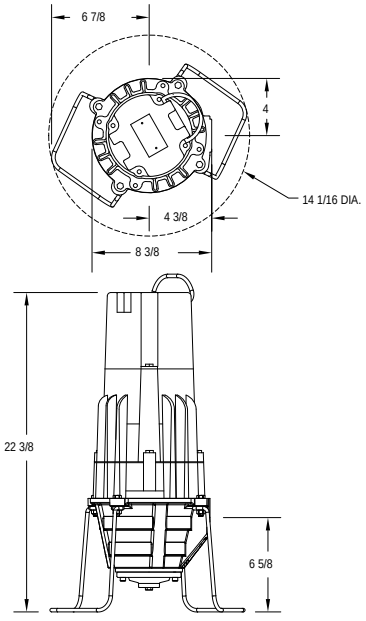

SK2533

FIGURE 5A.

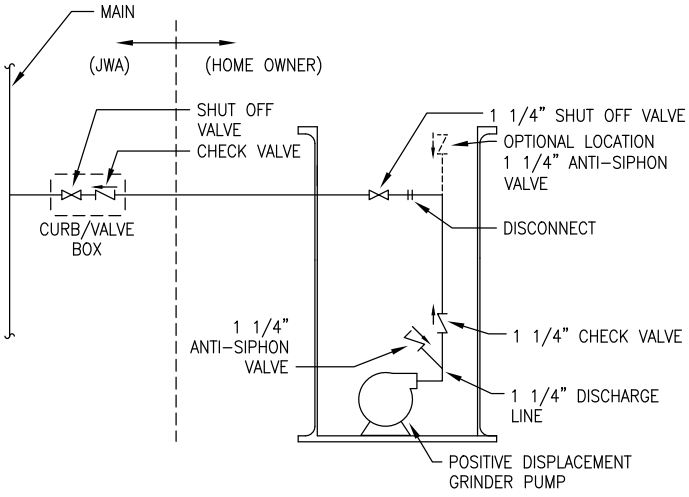

SK2810

All installations must comply with all applicable electrical and plumbing codes, including but not limited to the National Electrical Code, local, regional and/or state plumbing codes, etc.

© Copyright 2010 Zoeller Co. All rights reserved.

Outdoor Prepackaged System Installation Instructions

⚠ NOTICE This set of instructions is for factory prepackaged outdoor progressing cavity grinder systems only. If this is a field assembled outdoor system you can use these instructions as a guideline.

1. Review the drawing in Fig. 4 on page 5 and the actual system to become familiar with the components in the packaged grinder pump system. Review where the unit will be installed. Determine where the power feed, inlet pipe, and discharge pipe will be located.
2. Remove the unit from packing. Prepackaged outdoor systems are preassembled at the Zoeller Company and require a minimum of field assembly work. Float switches are set and tethered for proper operation from the Factory. The alarm switch should be located 2" above the pump "on" level.
3. Float switches are tied in place for shipping purposes on all model prepackaged systems. Cut the cable tie around each float switch bulb or the unit will not operate properly. Verify that where the float switches are set will work for your application. Verifying that the float switches are set properly and will not hang up inside the basin is the responsibility of the installing contractor.
4. Dig a hole for the basin. The hole should be at least 24" larger in diameter than the basin diameter to provide 12" of backfill all around and deep enough to provide either 12" of compacted backfill or 6" when a concrete pad is required. Ensure the removable cover extends above the finished grade line and the grade slopes away from the unit. Backfill and subbase should be 1/8" –3/4" pea gravel or 1/8" –1/2" crushed stone. (Reference basin installation instructions included with unit)
5. Note: Care must be taken when excavating in order to avoid underground utilities and disturbance of existing structure foundations. The hole should be located at least ten feet from adjacent structures. Additional distance may be required to sufficiently locate the basin outside of the loading area of the adjacent structures.
6. The location of the inlet fitting is determined by the depth of the inlet pipe. The inlet fitting must be used with 4" pipe. It is best to install the inlet on the side of the basin opposite the float switches. To install, use a 5" hole saw to drill into the side of the basin at the correct elevation. Center the hub inner diameter with the hole in the basin. Attach the hub to the side of the basin using the sealant and hardware provided.
7. The bottom of the excavation can now be back filled and compacted. Set basin in hole and connect the 4" inlet pipe to the inlet hub.
8. The discharge piping is connected to the 1¼" threaded fitting located in the basin sidewall.
9. On basin depths of 72" and greater, the system's disconnect assembly is shipped loose and must be screwed into the discharge piping. Apply pipe dope to threaded connection.
10. Connect pull rod to Pump assembly. Connect lift cable to top of pump. Lower the pump into basin ensuring the discharge pipe bracket slides into the disconnect fitting.
11. Pouring a concrete anchor around system can now be completed. Basin should be filled with water when pouring concrete to minimize movement of the system. Back fill around basin with specified media. Care should be used to avoid damaging components or leaving voids when back filling. Refer to Basin installation reference guide on more specific requirements.
12. Note: The progressing cavity grinder basin is a sewage holding tank. Vent connection should be installed in accordance with all national, state and local plumbing codes.
13. Dig a trench for the electrical conduit. Trench should be located at least 18" deep and follow all applicable NEC codes. Connect electrical wiring to Junction box according to wiring instructions included in this manual and wiring diagram in box. Use the included sealant when closing Junction box.
14. If used, a control panel is installed within sight of the system. Connect float switches and pump cords according to the "Pump Wiring Instructions" found in this manual and located inside the panel enclosure.
15. Remove any debris from the basin. Using clean water, check the system for proper operation.
16. Seal and secure the lid using the proper bolts and sealant when using a lid without a formed gasket.
17. Add water to the basin and test the system for leaks and proper pump operation.
18. Record system start up data for future reference.

Operation

GENERAL

Zoeller pumps are lubricated and tested at the factory prior to shipment and require minimum pre-start-up maintenance.

Maximum operating temperature of pump liquid for grinder pumps must not exceed 130°F (54°C).

These units are not designed to handle liquids other than sanitary sewage. If pump is used to dewater areas with contaminated liquids with heavy or abrasive materials, the warranty will be voided.

NAMEPLATE DATA

The nameplate, located on the top of the pump, indicates specific information about the construction of the pump. The model number and date code information should be recorded on the front page in the "Owner's Information" section of this manual.

SHORT TERM STORAGE

When not in use, the pump should be stored and the following is advised:

- Drain pump housing by laying pump horizontal with discharge down. Then stand pump on legs.
- Store pump inside whenever possible or cover with some type of protective covering.
- Tape or seal in plastic bag the terminal ends of wire leads.
- Spray coat unpainted surfaces with rust inhibiting oil.
- The impeller should be rotated every six months in order to keep the seal lubricated and not develop a permanent set.

If panel is to be stored, the following is advised:

- Store the panel inside whenever possible and leave in the shipping box.
- All openings shall be sealed.
- Store in an upright position.
- Do not stack anything on top of panel.

START-UP PROCEDURE

Before placing the equipment into operation the following should be checked:

- Clean pit.
- Electrical boxes dry and securely installed.
- Floats positioned properly.
- Discharge valves open.
- Adequate water level in basin for pump submersion.

Once the above has been verified proceed with the following checks:

- Pump power cables and control floats properly installed and voltage verified.
- Conduit connections to panel are properly sealed.
- After installing the pump into the containment area, with adequate submergence, open the discharge valve fully. Start the unit using manual controls. If flow is appreciably less than rated performance, pump may be air locked. To expel trapped air, jog the unit several times, using the manual controls.
- Have a qualified electrician take voltage and current measurements with the pump running. Record these readings in the space provided in the "Owner's Information" section on page 1 of this manual for future reference.

ADJUSTMENT PROCEDURE

Pumps: No adjustments are required.

Floats: Refer to the system drawing or to the panel wiring schematic for the desired location of each float switch setting.

Valves: Discharge valves should be placed in the fully open position. Systems should not be operated for extended periods of time with the discharge valves partially closed due to damaging the valve.

SHUTDOWN PROCEDURES

If a system is shutdown for more than six months, the following is recommended:

Pumps: If pit is to remain dry, then the pump can remain in the pit. Do not run dry. If the pit is to remain wet, the pump should be removed and stored as noted above.

Panels: The panel should have all openings sealed to prevent moisture and dust from entering the enclosure. Prior to restarting system, the panel should be inspected for presence of moisture and any loose connections.

Valves: Consult the valve/actuator supplier for information concerning these systems components.

© Copyright 2010 Zoeller Co. All rights reserved.

Cutter Maintenance

1. **All power circuits must be disconnected and locked out before any attempts are made at servicing.** The star cutter and disc can be removed and sharpened by grinding the cutting faces. Both star cutter and disc must be removed from the pump. Removal of these parts can be accomplished in the field by removing pump from the sump and positioning horizontally to access the intake of the pump. If seals or other repairs are required, the pump must be totally removed and serviced in a shop by a qualified pump technician or authorized service center.
2. Thoroughly clean the star cutter and disc assembly. Tilt pump back to the vertical position to make certain the end play has been removed. Check and record the clearance between the star cutter and disc with a feeler gage. The correct running clearance is between 0.007" and 0.012".
3. With pump in horizontal position, heat the hex head bolt in the center of the star cutter with a propane torch. The bolt must be heated to 350° F to soften the thread lock sealer on the bolt for ease of removal. Remove the bolt by turning in a counterclockwise rotation. It will be necessary to use a wood block to prevent the star cutter from turning while removing the bolt. Pull star cutter from the shaft and remove the spacer shims located behind the star cutter.
4. Remove the six cap screws holding the disc and remove disc from the pump.
5. The disc and star cutter can be replaced with new service parts or resurfaced by grinding. Resurfacing is accomplished by surface grinding both disc and star cutter to a 32 micro finish. Do not attempt grinding in the field. Send parts to a qualified machine shop or return to the factory for repair. The disc, star cutter and shims are a matched set. Keep parts together. Measure disc before and after resurfacing with micrometer and record measurements.
6. After resurfacing, the disc and star cutter must be flat within 0.001". If the disc has been surface ground, it will be necessary to remove shims to compensate for the material removed from the disc. As a starting point, remove shims of the same thickness as the amount machined from the cutter disc (step 6 above). Final running clearance must be between 0.007" and 0.012". Be sure pump is in vertical position and all end play has been removed before measuring.
7. Clean bottom of pump where disc is located and replace disc and retainer screws. Torque to 63-67 in-lbs. Replace star cutter with the correct shims. Install washer and torque hex head bolt to 71-75 in.-lbs. apply Loctite 262 thread-lock sealant or equal to bolt threads prior to insertion. Check running clearance with pump in vertical position to remove end play. Clearance must be between 0.007" and 0.012" to obtain efficient grinding when pump is put back in service.
8. Check the oil in the motor housing before reinstalling. Contact the factory if the oil has a milky appearance or burnt smell. The level should be even with the fill plug when pump is in the upright position. Add oil if required. Use insulating oil supplied by the factory.

FIGURE 7.

To remove star cutter: Heat the center bolt to 350°F to loosen Loctite® thread sealant.

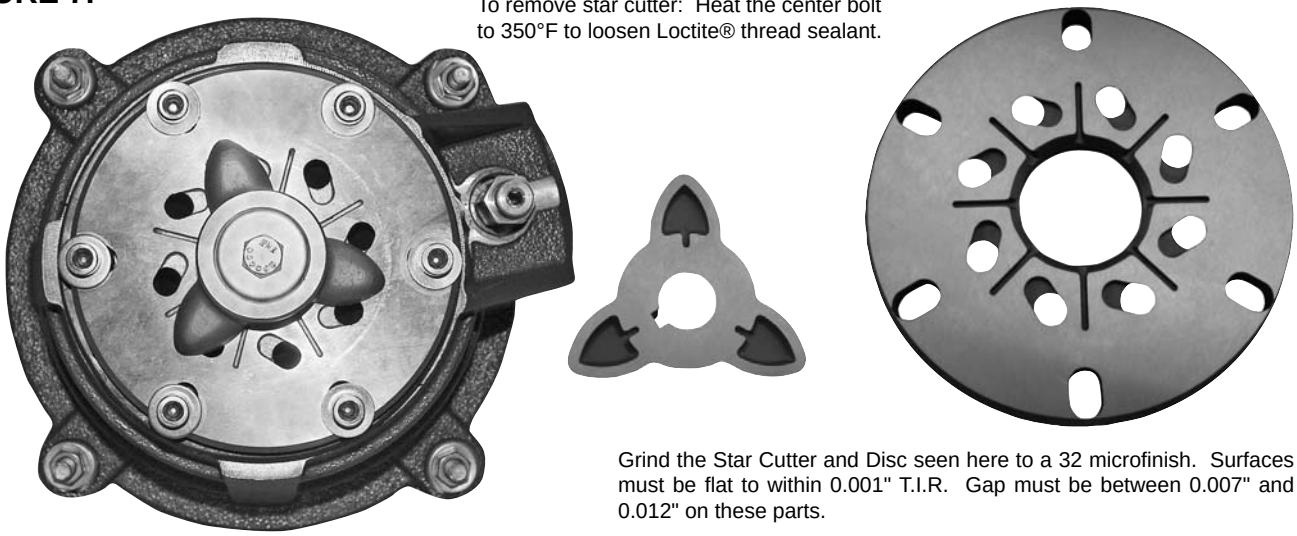

Grind the Star Cutter and Disc seen here to a 32 microfinish. Surfaces must be flat to within 0.001" T.I.R. Gap must be between 0.007" and 0.012" on these parts.

General Maintenance

⚠ NOTICE Repair and service should be performed by a Zoeller Pump Company Authorized Service Station only.

SAFETY PROCEDURES

⚠ WARNING For your protection, always disconnect pump and panel from its power source before handling.

⚠ WARNING Never enter the basin until it has been properly vented and tested. Any person entering a basin should be wearing a harness with safety rope extending to the surface so that they can be pulled out in case of asphyxiation. Sewage water gives off methane and hydrogen sulfide gases, both of which can be highly poisonous.

Installation and checking of electrical circuits and hardware should be performed by a qualified electrician.

Pump is never to be lifted by power cord.

⚠ WARNING Unit must be cleaned and disinfected, inside the pumping chamber and all exterior surfaces, prior to servicing.

GENERAL SYSTEM INSPECTION

Before the system is placed into operation, it should be inspected by a qualified technician.

⚠ WARNING Wiring and grounding must be in accordance with the National Electrical Code and all applicable local codes and ordinances.

LUBRICATION PROCEDURES

No lubrication is required.

If pumps are to be stored for more than six months, refer to short term storage procedure in the Operation section.

PREVENTIVE MAINTENANCE

Preventive maintenance is recommended to ensure a long service life from the product. Provided is a suggested maintenance schedule.

Every month:

- Check for proper and unobstructed float operation.
- Listen for proper check valve operation.

© Copyright 2010 Zoeller Co. All rights reserved.

Service Checklist



⚠ WARNING Electrical precautions. Before servicing a grinder pump, always shut off the main power circuit. Make sure you are wearing insulated protective sole shoes and not standing in water. Under flooded conditions, contact your local electric company or a qualified licensed electrician for disconnecting electrical service to the pump prior to removal.



⚠ WARNING Grinder pumps contain oil which becomes pressurized and hot under operating conditions. Allow 2½ hours after shut down before servicing pump.

Condition	Common Causes
A. Pump will not start or run.	Blown panel or circuit breaker fuse, low voltage, thermal overload open, defective capacitor circuit, cutter or impeller clogged, float switch held down or defective, incorrect wiring in control panel, water in cap assembly, check valve not installed or malfunctioning.
B. Motor overheats and trips on overload.	Incorrect voltage, impeller or cutter blocked, negative head (discharge lower than intake of pump). Defective “off” float. Pump runs continuously at low water level. Low oil level in motor shell. Pump running at shut-off head, check valve not installed or malfunctioning.
C. Pump will not shut off.	Debris under float assembly, defective switch, incoming sewage exceeds capacity of pump.
D. Pump operates but delivers little or no water.	Intake clogged with grease or sludge, low or incorrect voltage, clogged discharge line, operating near shut-off head.
E. Pump starts and stops too often.	Check valve stuck open or defective. Sump pit too small to handle incoming sewage. Level control out of adjustment. Thermal overload tripping.
F. Large red flashing light comes on at control box.	High water in pit. Check pump for clogging, or overload trip.
G. Grease and solids accumulate in pit around pump.	Break up solids and run pump with water running into the pit. Allow level to lower to the pump intake. Continue until solids are cleared from the pit. Do not drain kitchen grease down the sink.

www.zoeller.com

ZOELLER® PUMP CO.

MAIL TO: P.O. BOX 16347
Louisville, KY 40256-0347
SHIP TO: 3649 Cane Run Road
Louisville, KY 40211-1961
(502) 778-2731 • 1 (800) 928-PUMP
FAX (502) 774-3624

Manufacturers of..

"Quality Pumps Since 1939"

© Copyright 2010 Zoeller Co. All rights reserved.