"Quality Pumps Since 1939"

Product information presented here reflects conditions at time of publication. Consult factory regarding discrepancies or inconsistencies.

ZOELLER® PUMP CO.

MAIL TO: *P.O. BOX 16347 • Louisville, KY 40256-0347*
SHIP TO: *3649 Cane Run Road • Louisville, KY 40211-1961*
(502) 778-2731 • 1 (800) 928-PUMP • FAX (502) 774-3624

SECTION: 2.50.005
FM2344
0512
Supersedes
0510

visit our web site:
www.zoeller.com

THE SHARK® Series

PROGRESSING CAVITY GRINDER PUMP

810-815 SERIES
PROGRESSING CAVITY GRINDER PUMP MODELS
810 - 1 HP
815 - 2 HP

FEATURES:

- Finned Class 30 Cast Iron Construction
- Corrosion Resistant Powder Coated Epoxy Finish
- Discharge Size - 1¼" NPT
- 1 & 2 HP, 60 Hz, 1750 RPM
  Model 810 - 1 HP, 230 Volts/1 Ph
  Model 815 - 2 HP, 230 Volts/1 Ph
- UL Listed 20 ft. 3-wire neoprene cord with 15 amp plug
- Oil-Filled - Hermetically Sealed Motor with Class B Windings
- Hardened Stainless Steel Cutter and Disc, Rockwell C55-60
- Stainless Steel Hydraulic Pump Rotor
- Pressure Relief Valve
- Upper and Lower Ball Bearing Construction
- Carbon/Ceramic mechanical seal
- Integral Thermal Overload Protection with Automatic Reset
- SS Mounting Stand for free standing installation
- Preassembled Systems Available

C SA US
Tested to UL Standard UL778 & Certified to CSA Standard C22.2 No. 108

QUALITY MADE America's Pump Co. BY U.S. CRAFTSMEN



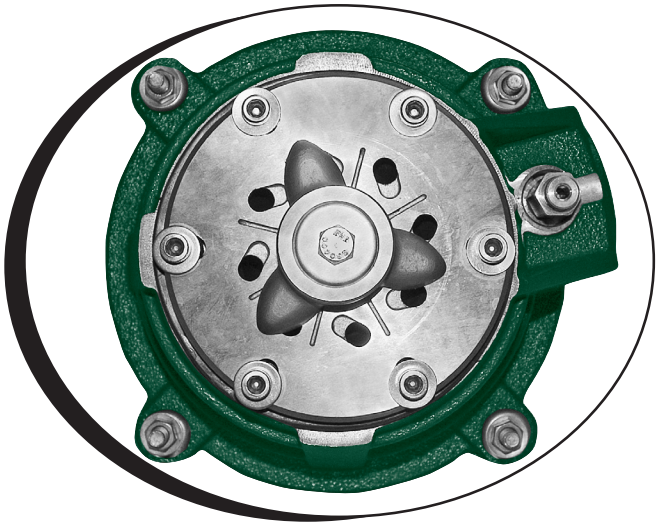

POWDER COATED TOUGH™

Submersible Wastewater Pump Association SWPA MEMBER

Product may not be exactly as pictured.

© Copyright 2012 Zoeller Co. All rights reserved.

GRINDER SYSTEMS

(A) GRINDER

STANDARD FEATURES:

- 1¼" NPT Discharge
- Carbon/Ceramic Tandem Seals
- Thermal Overload protection
- Hydraulic SS Rotor and Buna-n Stator
- Stainless Steel Cutter Plate / Cutter
- Stainless Steel Shaft
- Stainless Steel Hardware
- Corrosion resistant powder coated epoxy paint
- 20 ft. Power Cord Cord

OPTIONS:

☐ 25' Long Cords
☐ 35' Long Cords
☐ 50' Long Cords

(A) 810 & 815 PROGRESSING CAVITY GRINDER
1 OR 2 HP
1¼" N.P.T. DISCHARGE

P/N	WGT.	MODEL	VOLTS	PH	HP	AMP
☐ 810-0004	88	E810	230	1	1	7.0
☐ 815-0004	91	E815	230	1	2	10.5

Maximum operating temperature 130°F (54°C).

⚠ CAUTION To ensure proper pump operation, a swing or flapper style check valve must be installed in the pump discharge line. A faulty or non-functional check valve when combined with a pressure sewer may prevent the pump from starting.

Note: All variable level float switches in this section are mechanically activated and do not contain mercury.

ELECTRICAL - CONTROL / ALARM / FLOATS / JUNCTION BOX (SELECT 1 OF THE 3 COLUMNS)

QWIK BOX w/ FLOAT SWITCH

(B) ALARM PANEL

☐ P/N 10-0623 Indoor/Outdoor high water alarm with 15' control switch.

☐ P/N 10-0126 NEMA 4X high water alarm with 15' control switch and dry contact.

☐ P/N 10-1494 Indoor high water alarm with 15' control switch.

(C) PUMP SWITCH & WEIGHT - 1 pump switch required

Single piggy-back type 230 volt 13 amp

☐ P/N 10-0035 with 15' cord

☐ P/N 10-0689 weight for alarm float (Indoor Systems only)

(D) JUNCTION BOX - 1 required

☐ P/N 10-0580 Qwik-Box, NEMA 4X with 230 volt receptacle

PLUGGER PANEL

(B) CONTROL PANEL

☐ P/N 10-2006 Plugger panel, NEMA 4X with high water alarm and 230 volt receptacle.

(C) FLOAT SWITCHES - 2 required

Pump: One pump switch
Alarm: One control switch

☐ P/N 10-0706 piggy-back pump switch with 20' cord
☐ P/N 10-0311 piggy-back pump switch with 25' cord
☐ P/N 10-1956 piggy-back pump switch with 35' cord

☐ P/N 10-0744 mechanical control switch with 20' cord
☐ P/N 10-1877 mechanical control switch with 25' cord
☐ P/N 10-1878 mechanical control switch with 35' cord

(D) JUNCTION BOX

J-Box not recommended with this type control.

SIMPLEX PANEL

(B) CONTROL PANEL

☐ P/N 10-1212 Simplex panel, NEMA 4X, with high water alarm and pump circuit breaker, less float switches.

(C) FLOAT SWITCHES - 2 required

Pump: One pump switch
Alarm: One control switch

☐ P/N 10-0706 piggy-back pump switch with 20' cord
☐ P/N 10-0311 piggy-back pump switch with 25' cord
☐ P/N 10-1956 piggy-back pump switch with 35' cord

☐ P/N 10-0744 mechanical control switch with 20' cord
☐ P/N 10-1877 mechanical control switch with 25' cord
☐ P/N 10-1878 mechanical control switch with 35' cord

(D) JUNCTION BOX - optional

☐ P/N 10-2145 NEMA 4X with 3 cord seals and conduit connection.

© Copyright 2012 Zoeller Co. All rights reserved.

(E) INDOOR AND OUTDOOR PACKAGED SYSTEMS - PUMP & CONTROLS NOT INCLUDED

INDOOR SYSTEM

FIBERGLASS BASIN

Pump suspended from steel cover

☐ P/N 32-0029 24" X 36"

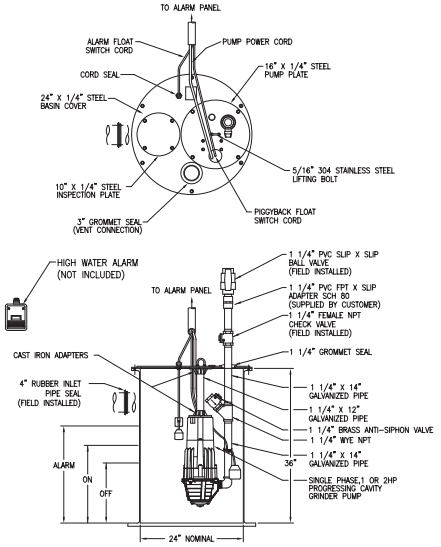

SK2628

- Fiberglass Basin
- Rust Resistant Steel Cover (epoxy coated)
- Inspection Plate
- Pump Plate
- 3" Adaptaflex Vent Seal
- 1¼" Adaptaflex Discharge Pipe Seal
- Cord Seal
- 1-4" Rubber Inlet Pipe Seal - Field Installed
- Pump Support Hardware
- 1¼" Brass Anti-siphon Device
- 1¼" NPT Brass Check Valve
- Ball Valve

OUTDOOR SYS. w/ SQUARE GRS

FIBERGLASS BASIN & COVER SQUARE GUIDERAIL SYSTEM

☐ P/N 33-0491 24" X 48"
☐ P/N 33-0492 24" X 60"
☐ P/N 33-0493 24" X 72"

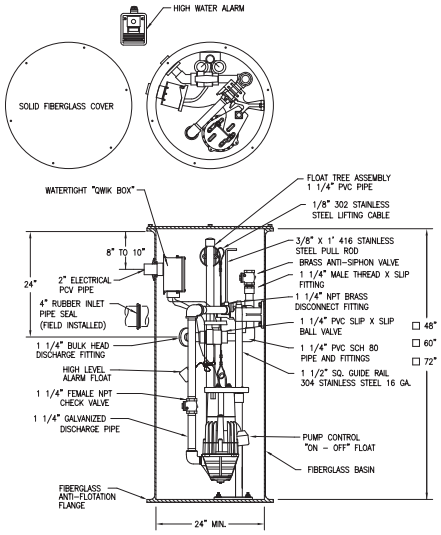

SK2569

- Fiberglass Basin with Anti-flotation Ring
- 1¼" Galvanized pump discharge piping to disconnect
- 1¼" PVC Discharge Pipe from Disconnect
- 1¼" Adaptaflex Discharge Pipe Seal
- Stainless Steel Square Guide Rail System
- 1' Pull Rod
- 8' SS Lifting Cable
- 1¼" PVC Ball Valve(s)
- 1¼" Brass Check Valve(s)
- 1¼" Brass Anti-siphon Device
- PVC Float Tree
- 1-4" Rubber Inlet Pipe Seal (Field Inst.)
- Fiberglass Cover

OUTDOOR SYS. w/ FLEX HOSE DC

FIBERGLASS BASIN & COVER 1.25" FLEXIBLE HOSE w/ DISCONNECT

☐ P/N 35-0006 24" X 48"
☐ P/N 35-0007 24" X 60"
☐ P/N 35-0008 24" X 72"

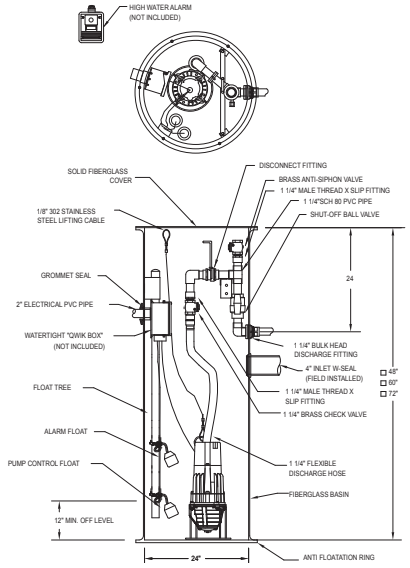

SK2540

- Fiberglass Basin with Anti-flotation Ring
- Flex-hose Discharge Assembly with Disconnect Fitting
- 1¼" PVC Discharge Pipe from Disconnect
- 1¼" Adaptaflex Discharge Pipe Seal
- 1' Pull Rod
- 8' SS Lifting Cable
- 1¼" PVC Ball Valve(s)
- 1¼" Brass Check Valve(s)
- 1¼" Brass Anti-siphon Device
- PVC Float Tree
- 1-4" Rubber Inlet Pipe Seal (Field Inst.)
- Fiberglass Cover

(F) ACCESSORIES FOR FIELD ASSEMBLED SYSTEMS

FLEX-HOSE DISCHARGE ASM.

☐ P/N 10-2038 w/30" hose

SQUARE GUIDE RAIL SYSTEM

☐ P/N 39-0106 - 48" Deep Basin
☐ P/N 39-0107 - 60" Deep Basin
☐ P/N 39-0108 - 72" Deep Basin

☐ P/N 39-0070 - Rail Extension Bkt.

EZ-OUT RAIL SYSTEMS

☐ P/N 39-0115 1¼"H x 1¼"V Galv.
☐ P/N 39-0116 1¼"H x 1¼"V SS
☐ P/N 39-0089 Intermediate Bkt. Galv.
☐ P/N 10-0090 Intermediate Bkt. SS

SS LIFTING CABLES AND ROD

☐ P/N 39-0031 8' Cable
☐ P/N 39-0032 12' Cable
☐ P/N 39-0069 1' Rod
☐ P/N 10-0789 SS Lifting Bail

GALVANIZED 1.25" DISCH. ELBOW

☐ P/N 018386

CHECK VALVE

☐ P/N 30-0223 1.25" NPT Brass

BALL VALVE

☐ P/N 30-0165 1.25" PVC
☐ P/N 30-0213 1.25" NPT Brass

PREWIRED CONDUIT (10-0580 Qwik Box Required)

☐ P/N 5100-0016 - 25'
☐ P/N 5100-0017 - 35'
☐ P/N 5100-0018 - 50'

© Copyright 2012 Zoeller Co. All rights reserved.

PREPACKAGED AND JOB READY SYSTEMS

INDOOR

REQ.		
1	810 or 815 Grinder	P/N _____ (A)
1	Alarm Panel	P/N _____ (B)
1	Piggyback Pump Switch	P/N _____ (C)
1	Weight for Alarm Float	P/N _____ (C)
1	Basin, Cover and Hardware	P/N _____ (E)

OUTDOOR

REQ.		
1	810 or 815 Grinder	P/N _____ (A)
1	Control Panel/Alarm System	P/N _____ (B)
1	Piggyback Pump Switch	P/N _____ (C)
1	Control Switch (if required)	P/N _____ (C)
1	Junction Box (if required)	P/N _____ (D)
1	Package Basin Assembly	P/N _____ (E)

FIELD MOUNT SYSTEMS

SIMPLEX

REQ.		
1	810 or 815 Grinder	P/N _____ (A)
1	Control Panel / Alarm System	P/N _____ (B)
1	Piggyback Pump Switch	P/N _____ (C)
1	Control Switch (if required)	P/N _____ (C)
1	Weight for Alarm Float (if required)	P/N _____ (C)
1	Junction Box (Optional)	P/N _____ (D)
1	Optional Accessories	P/N _____ (F)
		P/N _____ (F)
		P/N _____ (F)
		P/N _____ (F)

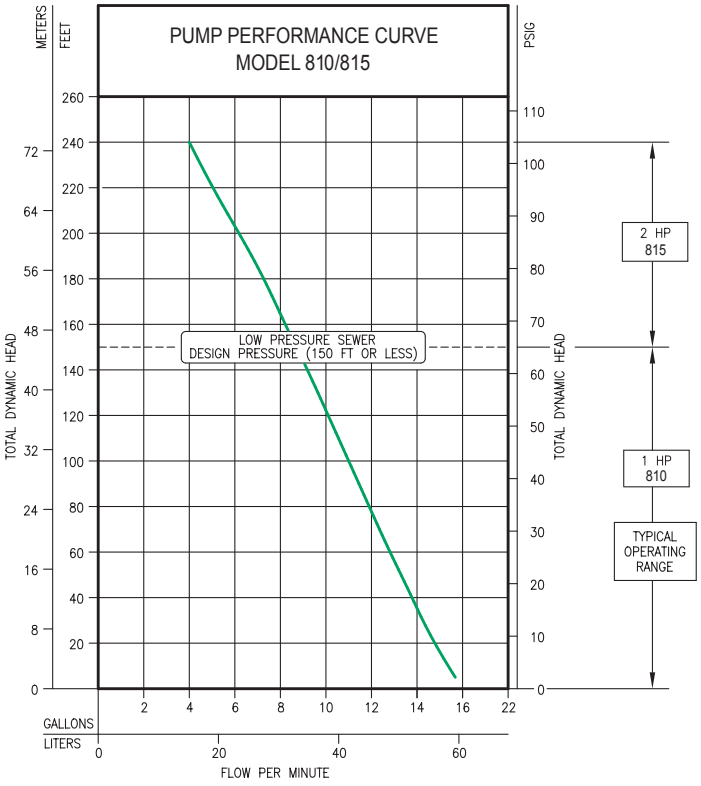

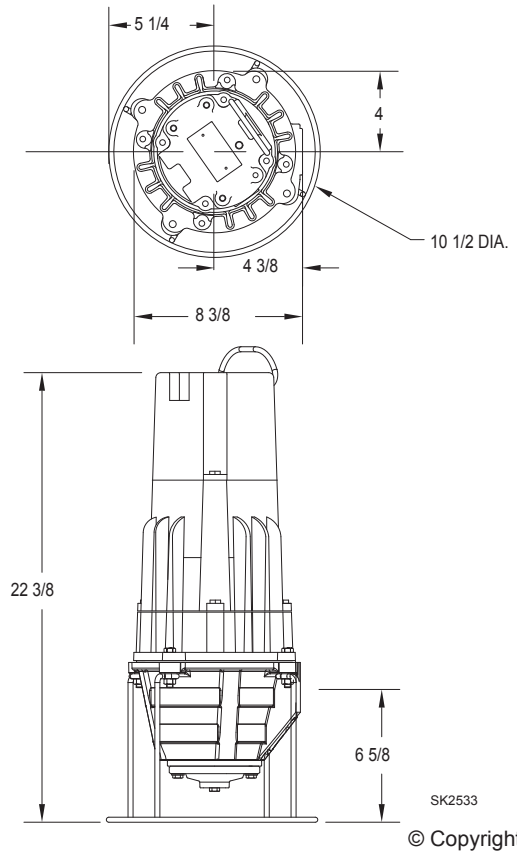

"922" Packaged Systems

Refer to FM2370 for Packaged Fiberglass or Poly-Ribbed Basin Assemblies for the models 810 and 815.

Manufacturers of… "Quality Pumps Since 1939"

© Copyright 2012 Zoeller Co. All rights reserved.