PVC SLIP JOINT CENTER OUTLET WASTE

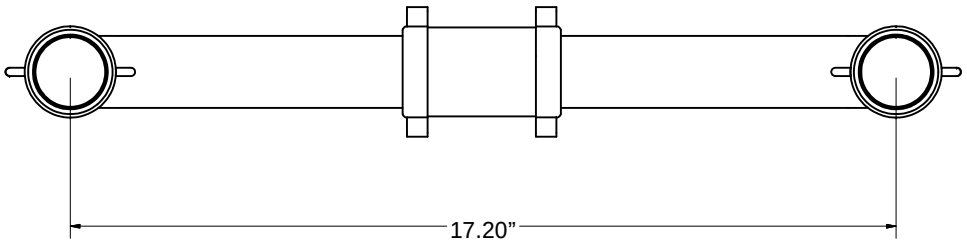

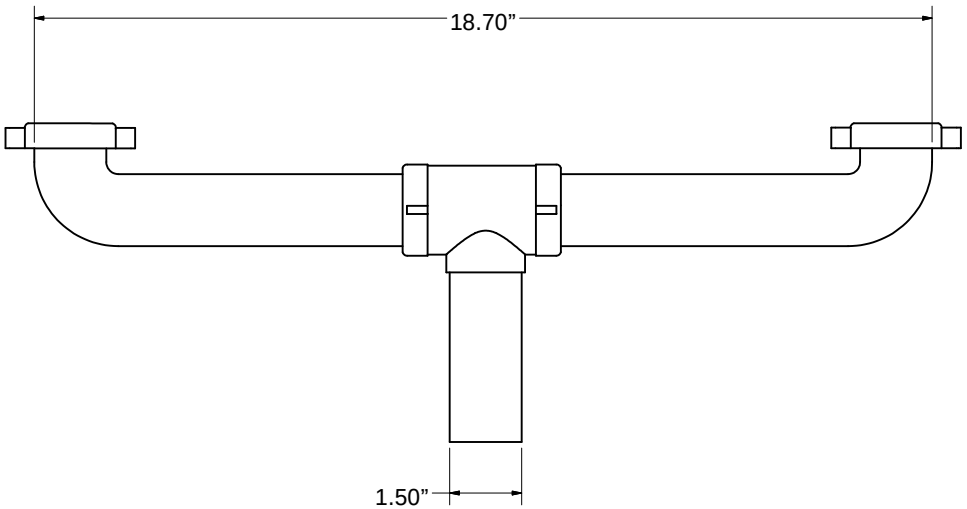

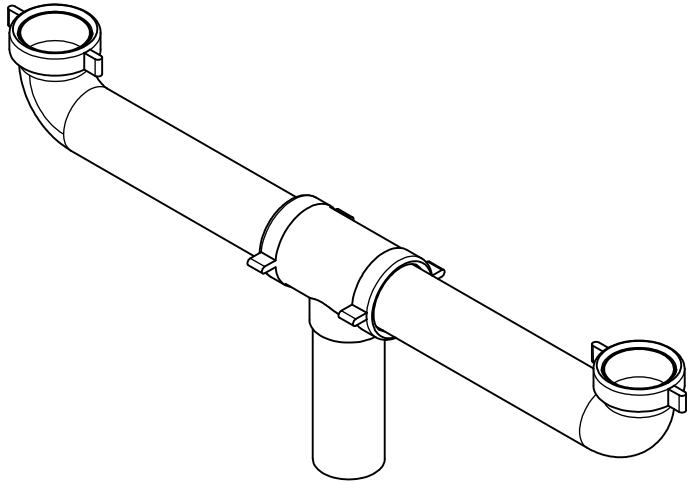

Jones Stephens Corp.

PHONE NUMBER
1-800-355-6637
FAX NUMBER
1-800-462-6991

SCALE .5 : 1 / DATE 7-01-11	PART NO.	P37004			
SHEET 1 OF 1	SIZE	1-1/2"			
DRAWN BY ASHLEY KRALOVEC	CNT QTY	40			