PVC SLIP JOINT END OUTLET WASTE

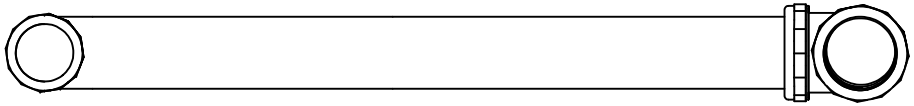

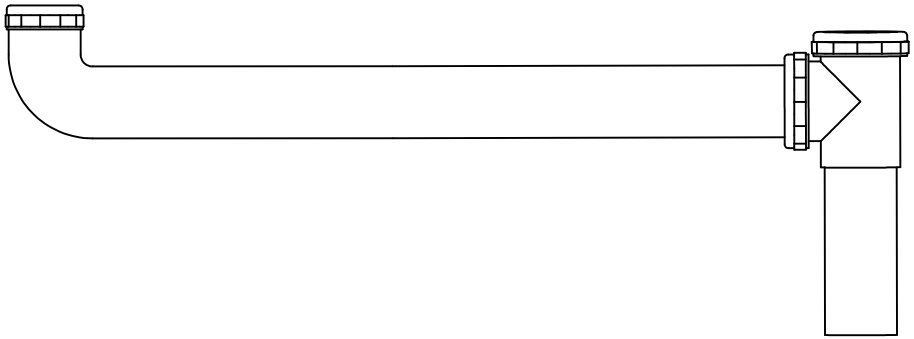

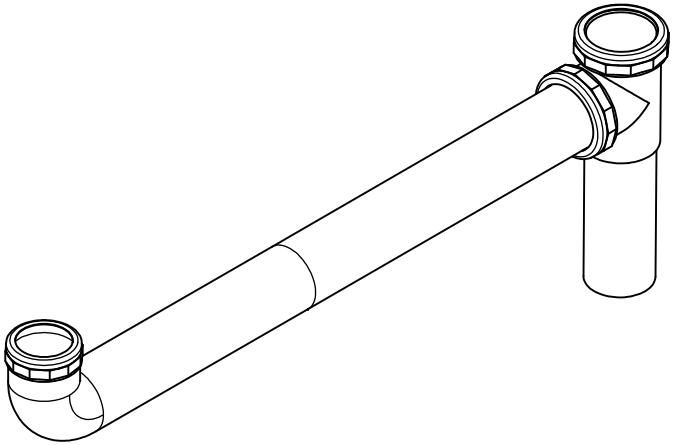

Jones Stephens Corp.

PHONE NUMBER
1-800-355-6637

FAX NUMBER
1-800-462-6991

SCALE .5 : 1

DATE 6-28-11

SHEET 1 OF 1

DRAWN BY ASHLEY KRALOVEC

PART NO.	P37007	P37034		
SIZE	1-1/2" X 16"	1-1/2" X 16" ADJUSTABLE ARM		