ROTHENBERGER

SUPERTRONIC 2SE / 3SE / 4SE

Ersatzteile
Spare Parts

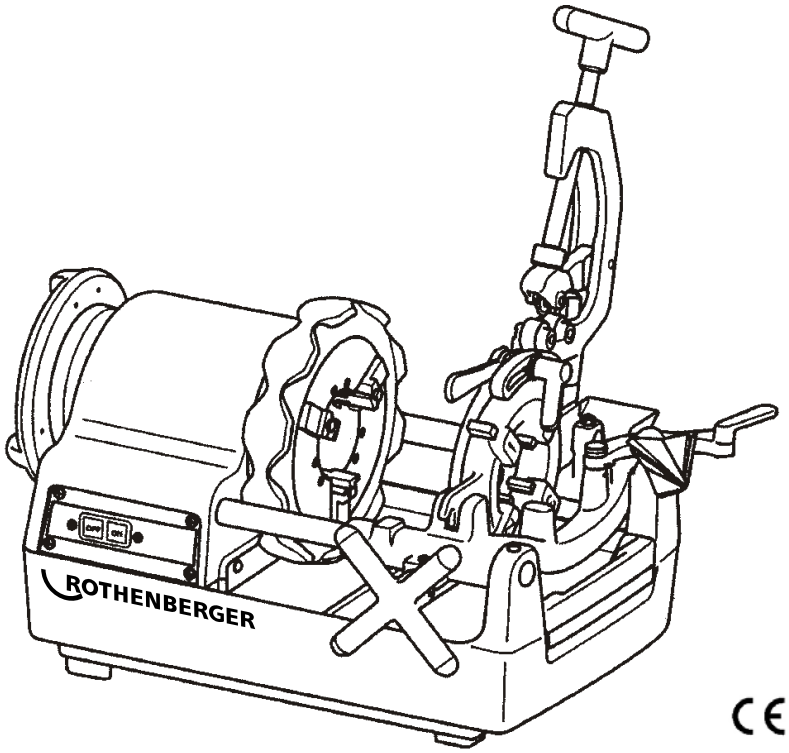

CE

ROTHENBERGER Werkzeuge GmbH
Industriestraße 7 - D-65779 Kelkheim/Germany
Telefon +49 (0) 6195 / 800-1
Telefax +49 (0) 6195 / 7 44 22
info@rothenberger.de www.rothenberger.com

Hotline Service-After Sales (Repair and Maintenance) +49 (0) 61 95-99 52 12
Hotline Accessories and Spare Parts +49 (0) 61 95-99 52 14

SUPERTRONIC 2 SE

Stand / dated: 05/04

Rohrabschneider, Arbeitsschlitten, Entgrater / Pipe Cutter, Carriage and Reamer

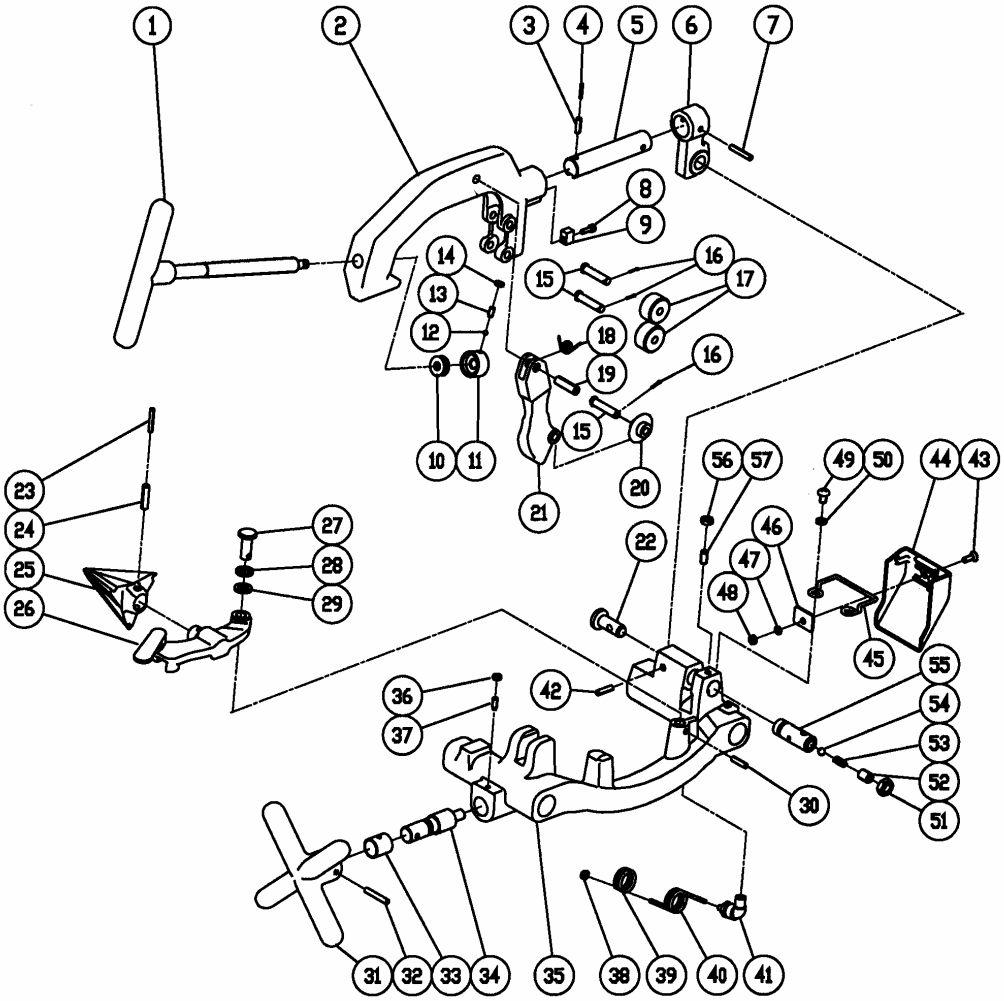

SUPERTRONIC 2 SE

Stand / dated: 05/04

Rohrabschneider, Arbeitsschlitten, Entgrater / Pipe Cutter, Carriage and Reamer

Nr. / No.	Bezeichnung	Description	Menge /QTY.	Art.-Nr / No.
set	Rohrabschneider kpl. (1-22,42)	Pipe Cutter Assembly (1-22,42)	1	8.1724
1	Handrad mit Spindel	Cutter Handle Complete	1	8.1725
2	Rohrabschneiderkörper	Cutter Body	1	8.1609
3	Spannstift D=6x20	Spring Pin D=6x20L	1	8.4191
4	Spannstift D=3,5x20	Spring Pin D=3.5x20L	1	8.1607
5	Bolzen, Rohrabschneider	Cutter Guide Bar	1	8.1610
6	Halter, Rohrabschneider	Cutter Bracket	1	8.1611
7	Spannstift D=6x36	Spring Pin D=6x36L	1	8.5778
8	Inbusschraube M5x15	Hex Socket Bolt M5x15L	1	8.5862
9	Führungsklotz	Cutter Key	1	8.5861
10	Drucklager 51100	Thrust Bearing 51100	1	8.8067
11	Druckhülse	Feed Screw Head	1	8.3396
12	Stahlkugel 3/16"	Steel Ball 3/16	1	8.3485
13	Stiftschraube M6x12	Hex Socket Set Bolt M6x12L	1	8.3510
14	Sechskantmutter M6	Hex Nut M6	1	8.4169
15	Gleitbolzen, Schneidrad / Druckrollen	Cutter Blade Set Pin	3	8.3308
16	Splint D=2x15	Split Pin D=2x15L	3	8.3754
17	Druckrollen	Cutter Roller	2	8.3156
18	Schenkelfeder	Bracket Spring	1	8.3752
19	Spannstift D=10x36	Spring pin D=10x36L	1	8.5757
20	Schneidrad Spezial Stahl	Cutter Blade NO3	1	7.0074
21	Schneidradhalter	Cutter Blade Holder	1	8.5794
22	Bolzen, Rohrabschneider	Cutter Pin	1	8.1618
set	Entgrater kpl. (23-30)	Reamer Assembly (23-30)	1	8.1727
23	Spannstift D=5x32	Spring Pin D=5x32L	1	8.1619
24	Spannstift D=8x32	Spring Pin D=8x32L	1	8.5791
25	Entgraterkopf	Reamer Blade	1	5.6198
26	Entgraterarm	Reamer Holder	1	8.1728
27	Befestigungsbolzen, Entgrater	Holder Pin	1	8.5788
28	Federring 12	Spring Washer M12	1	8.5789
29	U-Scheibe 12	Plain Washer S M12	1	8.5790
30	Spannstift D=6x24	Spring Pin D=6x24L	1	8.6876
set	Handrad kpl. (31-34)	Rack Handle Complete (31-34)	1	8.1630
31	Handrad	Rack Handle	1	8.1631
32	Spannstift D=6x40	Spring Pin D=6x40L	1	8.5916
33	Hülse	Pinion Metal	1	8.5875
34	Zahnwelle	Rack Pinion	1	8.4121
35	Arbeitsschlitten	Carrige	1	8.1635
36	Sechskantmutter M6	Hex Nut M6	1	8.4169
37	Stiftschraube M6x22	Hex Socket Set Bolt M6x22L	1	8.6871
38	Federstopper	Binding Band	1	8.3846
39	Schutzfeder	Protect Spring	1	8.1639
40	Ölschlauch NL06-10	Urethane Coiling Tube NL06-10	1	8.1640
41	Winkelstück L4N6x4-PT1/4	Elbow L4N6x4-PT1/4	1	8.1641
42	Spannstift D=8x32	Spring Pin D=8x32L	1	8.5791
43	Schraube M6x15	Flat Head Screw M6x15L(Parker)	1	8.1642
44	Spritzschutz	Splashpoof Plate	1	8.1644
45	Spritzschutzhalter	Splashpoof Plate Holder	1	8.1645
46	U-Platte	Holder Plate	1	8.6899
47	Federring 6	Spring Washer CM6	1	8.1621
48	Sechskantmutter 6	Hex Nut M6	1	8.4169
49	Schraube M8x12	Pan Head Screw M8x12L	2	8.1624
50	Federring 8	Spring Washer CM8	2	8.1625
51	Sechskantmutter M12	Hex Nut M12	1	8.1032
52	Öl- Einstellschraube	Oil Adjust Screw	1	8.6783
53	Feder, Öleinstellung	Oil Adjust Spring	1	8.3327
54	Stahlkugel 5/16"	Steel Ball 5/16	1	8.5805
55	Haltebolzen, Schneidkopf	Die Head Set Pin	1	8.5886
56	Sechskantmutter M8	Hex Nut M8	1	8.3789
57	Stiftschraube M8x15	Hex Socket Set Bolt M8x15L	1	8.6875

SUPERTRONIC 2 SE

Stand / dated: 05/04

Gehäuse / Frame, Spindle Case

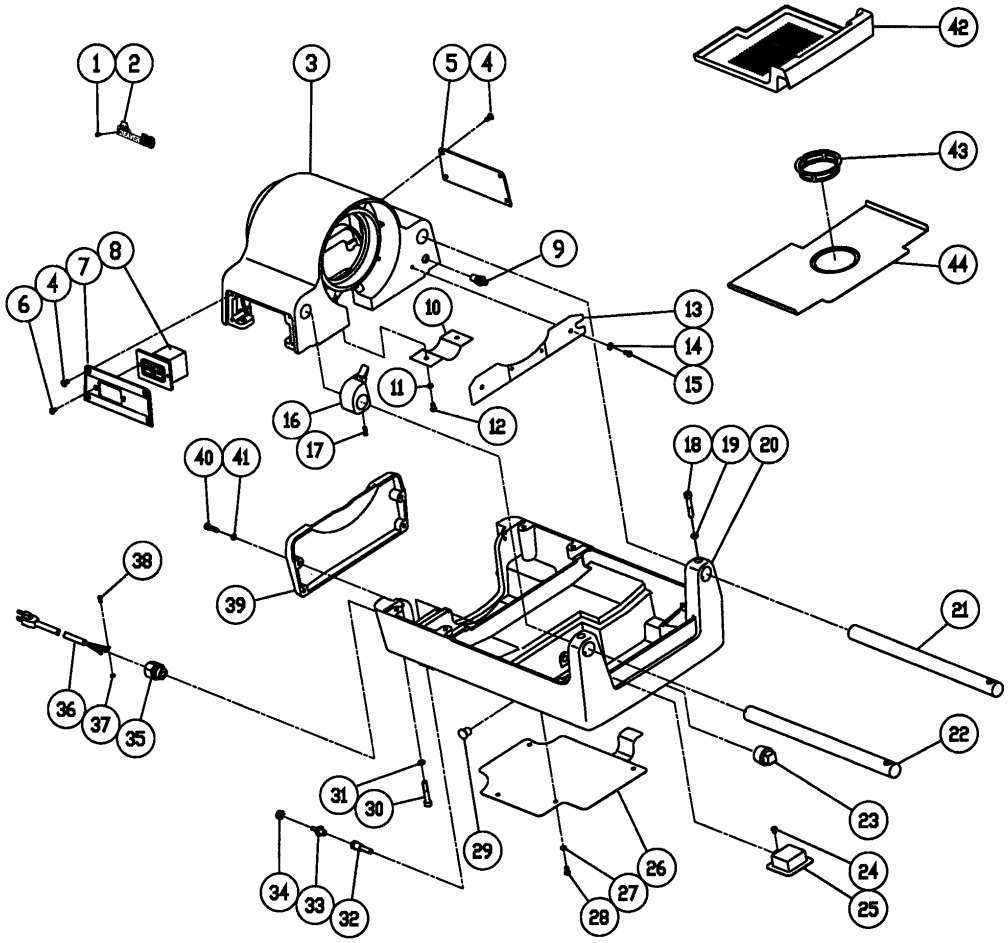

SUPERTRONIC 2 SE

Stand / dated: 05/04

Gehäuse / Frame, Spindle Case

Nr./ No.	Bezeichnung	Description	Menge / QTY	Art.Nr. / No
1	Schraube M2,5x8	Flat Head Tapping Screw M2.5x8L	2	8.1628
2	Namensschild	Name Plate	1	8.1629
3	Spindelgehäuse	Spindle Case	1	8.1632
4	Schraube M6x10	Flat Head Screw M6x10L	8	8.1633
5	Typenschild	Machine Plate	1	8.1636
6	Schraube M3x6	Flat Head Screw M3x6L	2	8.1634
7	Schalterplatte	Switch Plate	1	8.1637
8	Schalter BEH2302	Switch BEH2302	1	8.1638
9	Schraubnippel C4N6x4-PT1/4	Connecter C4N6x4-PT1/4	1	8.1643
10	Abdeckblech	Gear Cover	1	8.1647
11	Federring 6	Spring Washer CM6	2	8.1621
12	Schraube M6x12	Pan Head Screw M6x12L	2	8.1648
13	Schutzblech	Oil Cover	1	8.1651
14	Federring 6	Spring Washer CM6	4	8.1621
15	Schraube M6x12	Pan Head Screw M6x12L	4	8.1648
16	Anschlag	Outer Ring Spacer	1	8.1652
17	Schraube M6x6	Hex Socket Set Bolt M6x6L	1	8.5932
18	Schraube M8x45	Hex Socket Bolt M8x45L	2	8.5979
19	Federring 8	Spring Washer CM8	2	8.1625
20	Gehäuseunterteil	Frame	1	8.1654
21	Gleitstange, hinten	Guide Bar R	1	8.1655
22	Gleitstange, vorne	Guide Bar F	1	8.1659
23	Ölablassschraube 1/2"	Plug1/2"	1	8.3228
24	Schraube M6x12	Pan Head Screw M6x12L	1	8.1648
25	Ölfilter	Filter	1	8.4188
26	Bodenplatte	Frame Under Cover	1	8.1662
27	Federring 6	Spring Washer CM6	4	8.1621
28	Schraube M6x10	Hexagon Head Bolt M6x10L	4	8.1663
29	Blindstopfen DP-562	Hole Cap DP-562	2	8.1664
30	Schraube M8x50	Hex Socket Bolt M8x50L	4	8.1665
31	Federring 8	Spring Washer CM8	4	8.1625
32	Ansaugnippel	Suction Pipe	1	8.1666
33	Schraubnippel GES8xPT1/4	Connecter GES8xPT1/4	1	8.1658
34	Schlauchklemme D=12	Hose Clamp D=12	1	8.1657
35	Kabelverschraubung	Cord Connector OA-W1611	1	8.6902
36	Netzkabel 100V-120V	Power Cord 100V-120V	1	8.1667
37	Zahnscheibe 6	Tooth Look Washer M6	1	8.1668
38	Schraube M6x8	Pan Head Screw M6x8L	1	8.1669
39	Motorabdeckung	Pump Cover	1	8.1670
40	Schraube M6x20	Hex Socket Bolt M6x20L	4	8.3782
41	Federring 6	Spring Washer CM6	4	8.1621
42	Spänewanne	Chip Pan	1	8.1671
43	Ölsieb	Strainer	1	8.3364
44	Ölwannendeckel	Oil Tank Lid	1	8.1672

SUPERTRONIC 2 SE

Stand / dated: 05/04

Spannfutter, Arbeitsspindel / Hammer chuck, Scroll and Gears

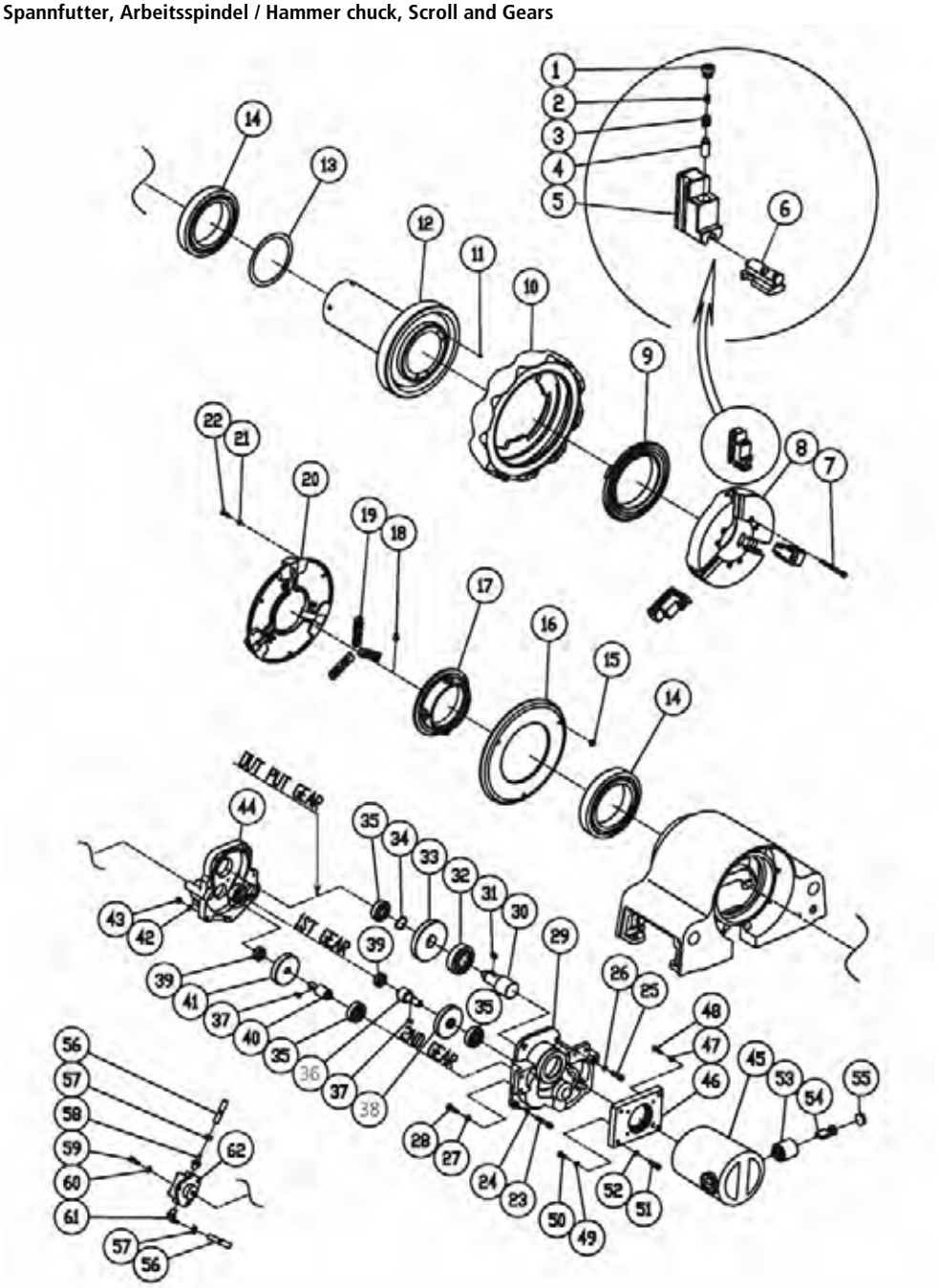

SUPERTRONIC 2 SE

Stand / dated: 05/04

Spannfutter, Arbeitsspindel / Hammer chuck, Scroll and Gears

Nr./ No.	Bezeichnung	Description	Menge / QTY	Art.Nr. / No
set	Schnellspannfutter kpl. (1-10)	Hammer Chuck Complete (1-10)	1	8.1600
set	Spannbackensatz (1-6) (3 Stück)	JAW Set Assembly (1-6)	1set	8.1719
set	Spannbackeneinsatz (2-4,6) (3 Stück)	Jaw Insert Set (2-4,6)	1set	5.6176
1	Spannbackenschraube	Hammer Chuck Bolt	3	8.1601
2	Spannbackenfeder B	Hammer Chuck Spring B	3	8.1602
3	Spannbackenfeder A	Hammer Chuck Spring A	3	8.1603
4	Spannbackenstift	Hammer Chuck Pin	3	8.1604
5	Spannbackengrundkörper (3 Stück)	Hammer Chuck Jaw Assembly	1set	8.1605
6	Spannbackeneinsatz (3 Stück)	Jaw Insert Complete	1set	8.1720
7	Schraube M6x70	Hex Socket Bolt M6x55L	6	8.8469
8	Spannfuttergrundkörper	Hammer Chuck Body	1	8.1608
9	Schneckenring, vorne	Hammer Chuck Scroll	1	8.3701
10	Schlagring	Hammer Chuck Outer Ring	1	8.5827
11	Druckfeder	Pre-Load Spring	6	8.5823
12	Arbeitsspindel kpl.	Spindle Gear Complete	1	8.1612
13	Druckring	Thrust Plate	1	8.5821
14	Kugellager 6015 2RS	Ball Bearing 6015 2RS	2	8.1614
set	Zentrierfutter kpl. (15-22)	Scroll Assembly (15-22)	1	8.1722
15	Sechskantmutter M6	Hex Nut M6	3	8.4169
16	Zentrierfutterdeckel, innen	Scroll Cap	1	8.1616
17	Schneckenring, Zentrierfutter	Scroll	1	8.1617
18	Schraube, Zentrierfutter	Scroll Stop Bolt	4	8.6929
19	Zentrierbacken (3 Stück)	Scroll Jaw Set	1set	8.3703
20	Zentrierfutterdeckel, aussen	Scroll Body	1	8.1723
21	Federring 6	Spring Washer CM6	3	8.1621
22	Schraube M6x18	Pan Head Screw M6x16L	3	8.1622
set	Getriebe kpl.	Drive Complete	1set	8.1620
23	Schraube M6x40	Hex Socket Bolt M6x40L	1	8.1623
24	Federring 6	Spring Washer CM6	1	8.1621
25	Schraube M6x25	Hex Socket Bolt M6x25L	5	8.1703
26	Federring 6	Spring Washer CM6	5	8.1621
27	Federring 6	Spring Washer CM6	4	8.1621
28	Schraube M6x25	Hex Socket Bolt M6x25L	4	8.1703
29	Getriebedeckel, vorne	Gear Box	1	8.1760
30	Getriebewelle	Output Shaft Pinion	1	8.1761
31	Passfeder 6x6x13	Key 6x6x13	1	8.3344
32	Kugellager 6304 ZZ	Ball Bearing 6304ZZ	1	8.1762
33	Zahnrad	Output Shaft Reduction Gear	1	8.1763
34	Sicherungsring 20	C Snap Ring S-20	1	8.1764
35	Kugellager 6201 ZZ	Ball Bearing 6201ZZ	3	8.5902
36	Getriebewelle	1st Shaft Pinion	1	8.1765
37	Passfeder 5x5x13	Key 5x5x13	2	8.3189
38	Zahnrad	1st Shaft Reduction Gear	1	8.1767
39	Kugellager 6301 ZZ	Ball Bearing 6301ZZ	2	8.6950
40	Zahnrad	2nd Shaft Reduction Gear	1	8.1709
41	Getriebewelle	2nd Shaft Pinion	1	8.1710
42	Federring 6	Spring Washer CM6	1	8.1621
43	Mutter M6	U-Nut M6	1	8.1711
44	Getriebedeckel, hinten	Gear Box Cover	1	8.1712
45	Motor 100V	Motor 100V	1	8.1713
45	Motor 110V	Motor 110V	1	8.1714
45	Motor 220V	Motor 220V	1	8.1715
45	Motor 230/240V	Motor 230/240V	1	8.1599
46	Motoradapterplatte	Motor Adapter	1	8.1646
47	Federring 5	Spring Washer M5	2	8.4094
48	Schraube M5x15	Pan Head Screw M5x15L	2	8.5933
49	Federring 4	Spring Washer M4	2	8.1649
50	Schraube M4x15	Pan Head Screw M4x15L	2	8.1650
51	Inbusschraube M6x20	Hex Socket Bolt M6x20L	4	8.3782
52	Federring 6	Spring Washer CM6	4	8.1621
53	Kohlenhalter	Carbon Holder	2	8.3691
54	Kohlenbürste (2 Stück)	Carbon Brush	1set	8.3689
55	Kohlenkappe	Carbon Cap	2	8.3693
56	Ölschlauch WP15	Urethane Hose WP15 In:300mm Out:200mm	2	8.1656
57	Schlauchklemme D=12	Hose Clamp D=12	3	8.1657
58	Schraubnippel	Connecter GES8xPT1/4	2	8.1658
59	Inbusschraube M6x18	Hex Socket Bolt M6x18L	3	8.3501
60	Federring 6	Spring Washer CM6	3	8.1621
61	Winkelnippel WES8xPT1/4	Elbow WES8xPT1/4	1	8.1661
62	Ölpumpe Top-12A	Trochoid pump TOP-12A	1	8.1717