PES6M PE Squeeze-Off Instructions

CAPACITY: 3" - 6"

Catalog No. PES6M Item Code #04313

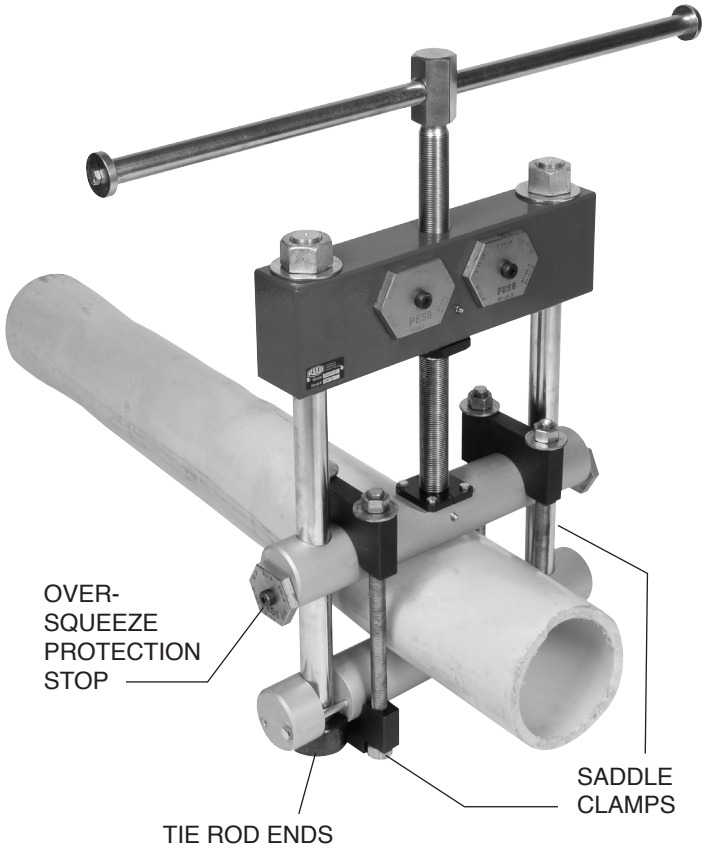

1. **FOLLOW ALL SAFETY PROCEDURES.**
2. Determine pipe/tube size and wall thickness to be squeezed. Set stops for over-squeeze protection.
3. Assemble tool handle where desired.
4. Insert ground probe from #04619 Grounding Accessory into moist soil, attach to bottom bar.
5. Unscrew the main pressure screw.
6. Lift and swing bottom bar.
7. Center the squeeze-off tool on and square to pipe. This will allow pipe to flatten without jamming pipe against tie rods.
8. Swing bar back over tie rods.
9. Turn the feed screw to compress the pipe at a slow rate with momentary pauses to allow stress relaxation in the pipe to occur. This is particularly important when pipe is stiff in cold weather.
10. Use SADDLE CLAMPS to aid compressing the pipe or as a safety precaution to prevent accident release. Tighten down on nuts to pull both sides of clamps together.
11. For thick pipe (1/2"-12 mm or larger), use saddle clamps to help squeeze the pipe.
12. Squeeze the pipe only until flow is controlled or bottom bar contacts OVER-SQUEEZE PROTECTION STOPS. Operation beyond this point may cause damage to pipe or tool.

TOOL REMOVAL

1. A release rate of 1/2" per minute or less should be maintained to prevent damage to pipe as recommended by ASTM F1041.
2. Rounding can be done by rotating tool 90° and applying enough force to round pipe.
3. Inspect squeezed section for damage before covering. Procedures should be followed that will prevent the same area to be squeezed-off more than once.

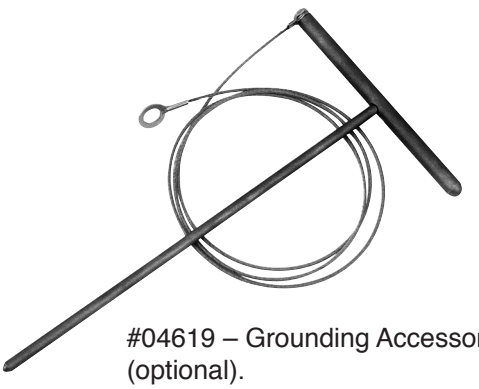

#04619 – Grounding Accessory (optional).

SAFETY CONSIDERATIONS

Pressure control situations requiring squeeze-off may involve working in the vicinity of escaping gas. Consider the possibility and potential hazard of static electricity and observe safety precautions. Safety precautions regarding static electricity generally include performing squeeze-off in a separate bellhole remote from the blowing gas; applying a wet rag/tape to the pipe surface; and spraying area with a fine water mist to provide for the dissipation of static charge to the ground - grounding the squeeze-off tool.* Check the squeeze-off tool prior to use to assure it is the correct size; is properly functioning; and is properly adjusted for the squeeze-off to be done.

*Reed strongly recommends use of the PEGR Grounding Accessory (#04619) with PE Squeeze-Off Tools. Use a grounding accessory as a precaution against static build-up. Dissipate the charge and minimize the possibility of ignition.

Additional information on static electricity is available in the A.G.A. Plastic Pipe Manual for Gas Service, Copyright 2006.

Reed Manufacturing Company
1425 West 8th Street
Erie, PA 16502 USA

Phone: 800-666-3691 or 814-452-3691
Fax: 800-456-1697 or 814-455-1697
www.reedmfgco.com

QUALITY & Service that Last a Lifetime