PES8H (Hydraulic) PE Squeeze-Off Tool (New Style 2009)

Replacement Parts

PIPE TOOLS & VISES
SINCE 1896

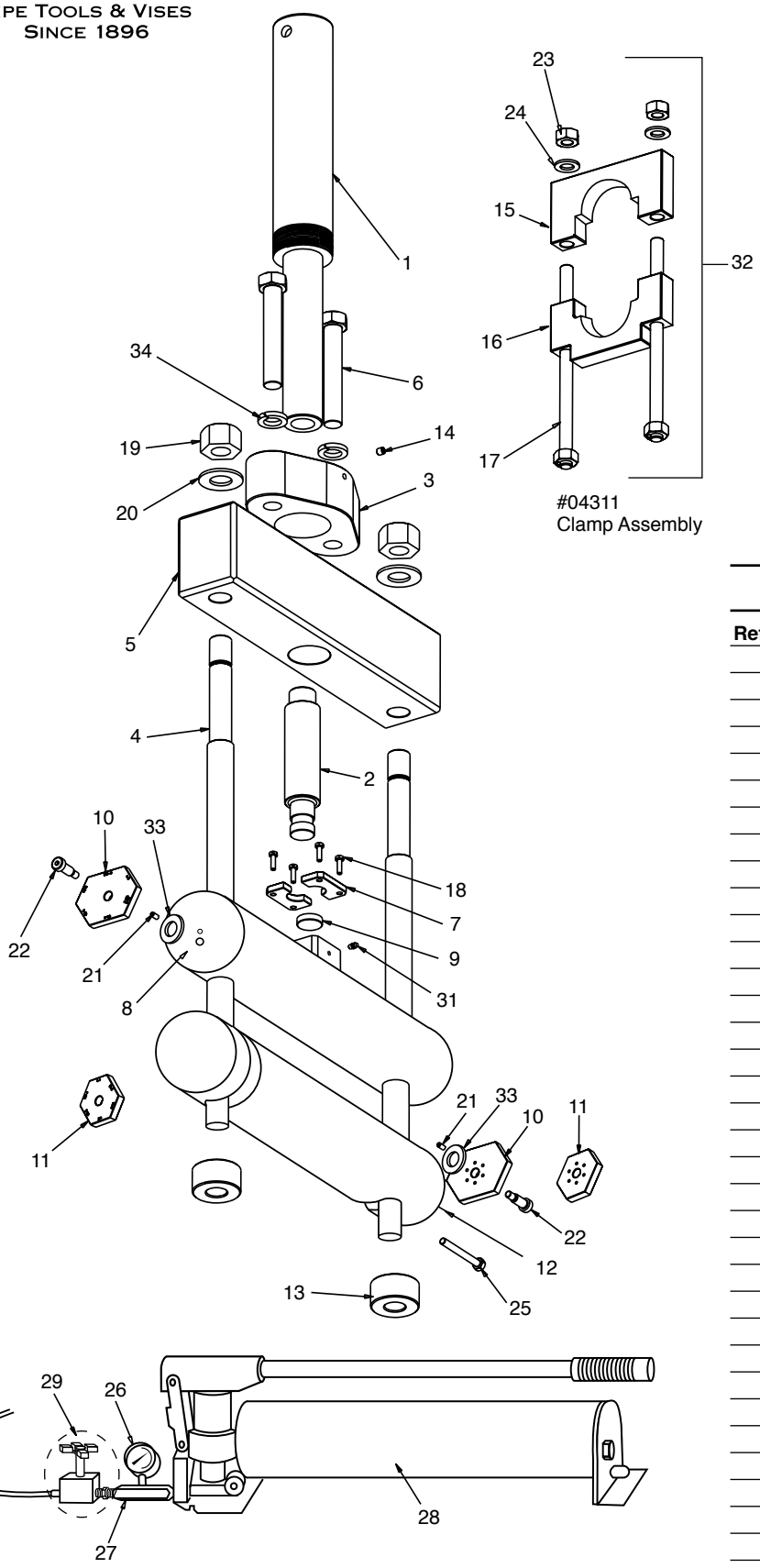

#04311
Clamp Assembly

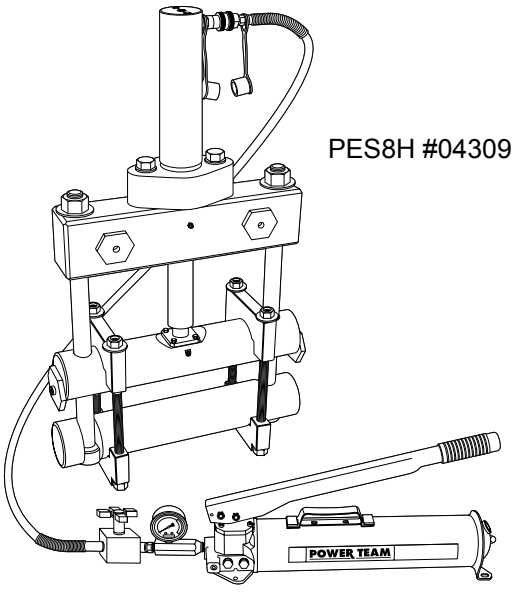

PES8H #04309

Parts List

Ref. No.	Description	Item Code	Qty. Used
1	Cylinder	94310	1
2	Rod Extension	94311	1
3	Cylinder Plate	94309	1
4	Tie Rod	98313	2
5	Head	94312	1
6	Hex Head Bolt	34309	2
7	Retainer Plate	98316	2
8	Crosshead Bar	98330	1
9	Thrust Cup	98317	1
10	Large Stops 6-8	98319	1 pair
11	Small Stops 3-4	98320	1 pair
12	Bottom Bar	98332	1
13	Tie Rod End	98322	2
14	Set Screw	34310	1
15	Top Clamp Bar	98324	2
16	Bottom Clamp Bar	98325	2
17	Clamp Rod	98326	4
18	Hex Head Screw	38315	4
19	Heavy Hex Nut	38311	2
20	Flat Washer	38312	2
21	Ball Plunger	98327	2
22	Shoulder Screw	38314	4
23	Hex Nut	38310	4
24	Flat Washer	38316	4
25	Hex Head Bolt	38317	1
26	Hydraulic Gauge	94314	1
27	T Fitting	94315	1
28	Hydraulic Pump	94316	1
29	Check Valve Assembly	94317	1
30	Hose	94319	1
31	Grease Fitting	98323	1
32	Clamp Assembly	04311	1 pair
33	Curved Washer	92761	2
34	Lock Washer	34312	2

Reed Manufacturing Company
1425 West 8th Street
Erie, PA 16502 USA

QUALITY & Service that Last a Lifetime

Phone: 800-666-3691 or 814-452-3691
Fax: 800-456-1697 or 814-455-1697
www.reedmfgco.com