REED
PIPE TOOLS & VISES
SINCE 1896

Standing Shut-Off Tool

Replacement Parts

Catalog No. SSO1C
Item Code #04281

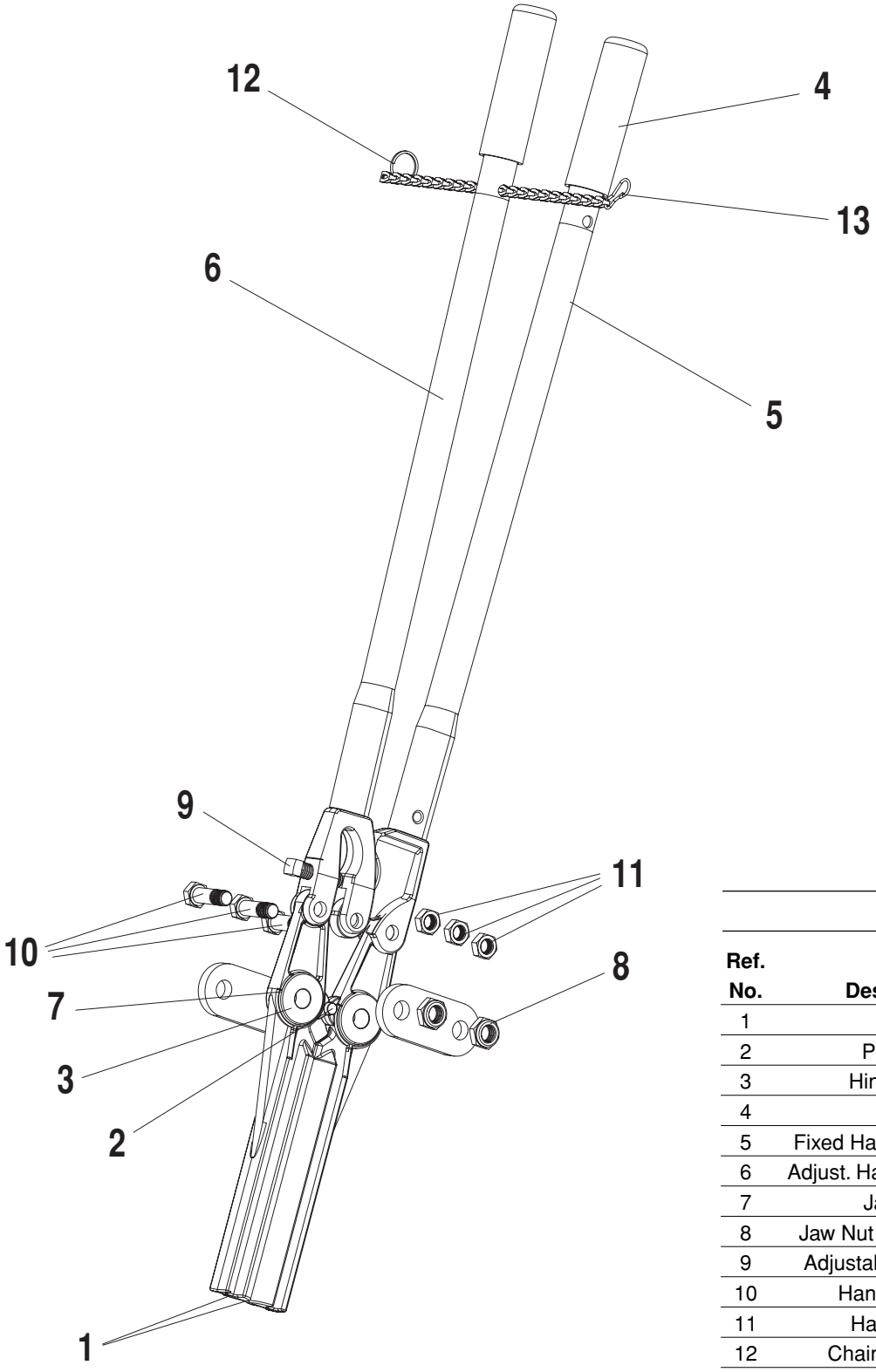

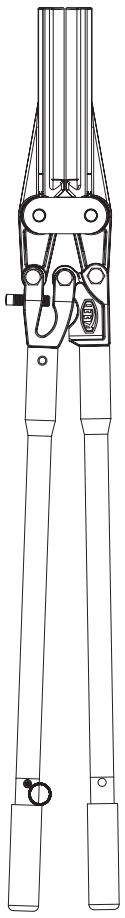

Parts List

Ref. No.	Description	Item Code	Qty.
1	Jaw	94331	2
2	Pivot Pin	34331	1
3	Hinge Plate	94333	2
4	Grip	94334	2
5	Fixed Handle Assembly	94336	1
6	Adjust. Handle Assembly	94337	1
7	Jaw Bolt	94332	2
8	Jaw Nut / Hex Locknut	30111	2
9	Adjustable Set Screw	98226	1
10	Handle Screw	98228	3
11	Handle Nut	98229	3
12	Chain Assembly	99055	1
13	Snap	40205	1

Reed Manufacturing Company
1425 West 8th St.
Erie, PA 16502 USA

QUALITY & Service that Last a Lifetime

Phone: 800-666-3691 or 814-452-3691
Fax: 800-456-1697 or 814-455-1697
www.reedmfgco.com

PIPE TOOLS & VISES
SINCE 1896

SSO1 Standing Shut-Off Tool (Old Style)

Replacement Parts

Catalog No. SSO1C
Item Code #04281

Sold before March 2006

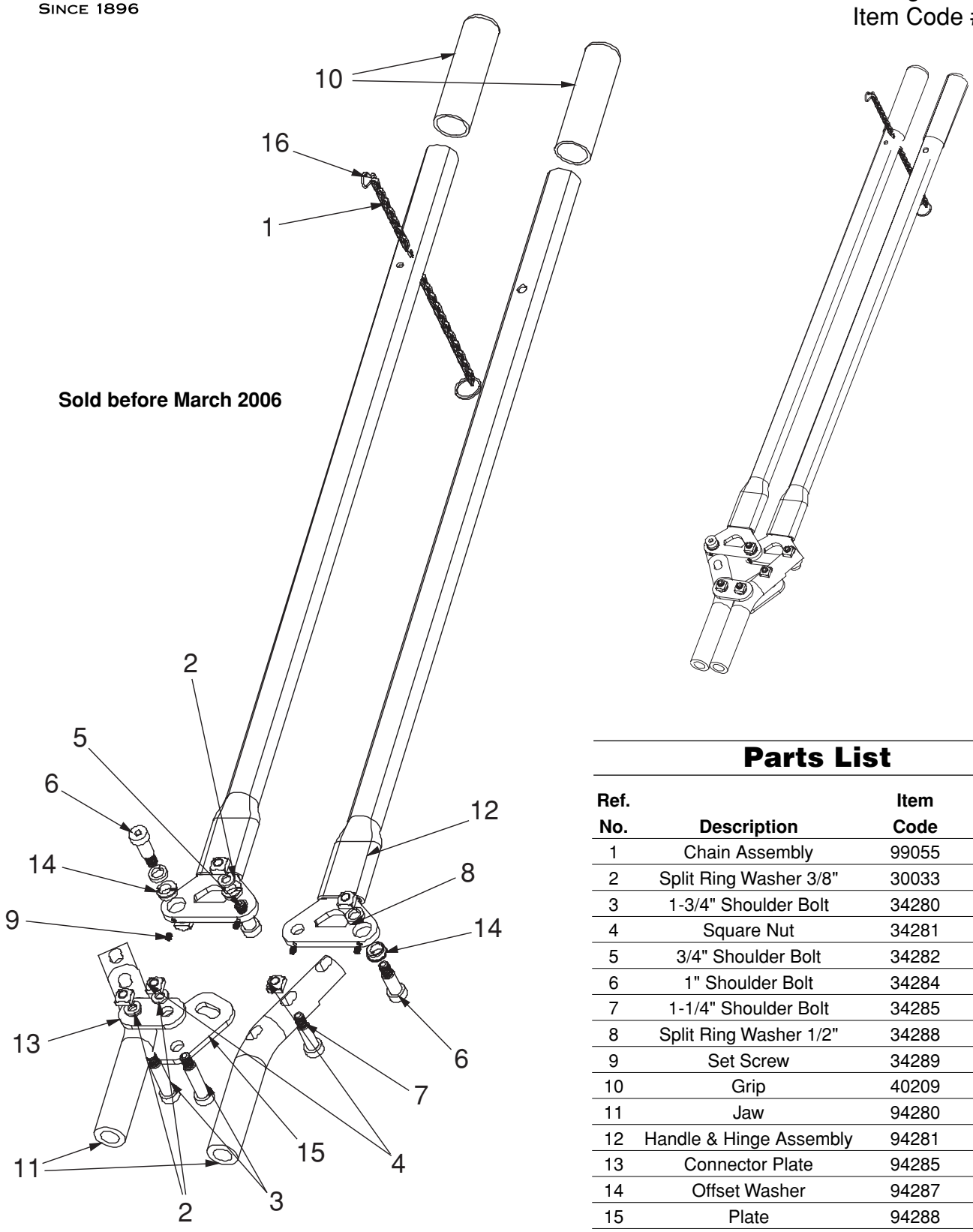

Parts List

Ref. No.	Description	Item Code	Qty.
1	Chain Assembly	99055	1
2	Split Ring Washer 3/8"	30033	3
3	1-3/4" Shoulder Bolt	34280	2
4	Square Nut	34281	6
5	3/4" Shoulder Bolt	34282	1
6	1" Shoulder Bolt	34284	2
7	1-1/4" Shoulder Bolt	34285	1
8	Split Ring Washer 1/2"	34288	2
9	Set Screw	34289	4
10	Grip	40209	2
11	Jaw	94280	2
12	Handle & Hinge Assembly	94281	2
13	Connector Plate	94285	1
14	Offset Washer	94287	4
15	Plate	94288	1
16	Clip	40205	1

Reed Manufacturing Company
1425 West 8th St.
Erie, PA 16502 USA

QUALITY & Service that Last a Lifetime

Phone: 800-666-3691 or 814-452-3691
Fax: 800-456-1697 or 814-455-1697
www.reedmfgco.com