TOTO®

TBMV

Deck-Mount Tub Filler with Handshower Valve

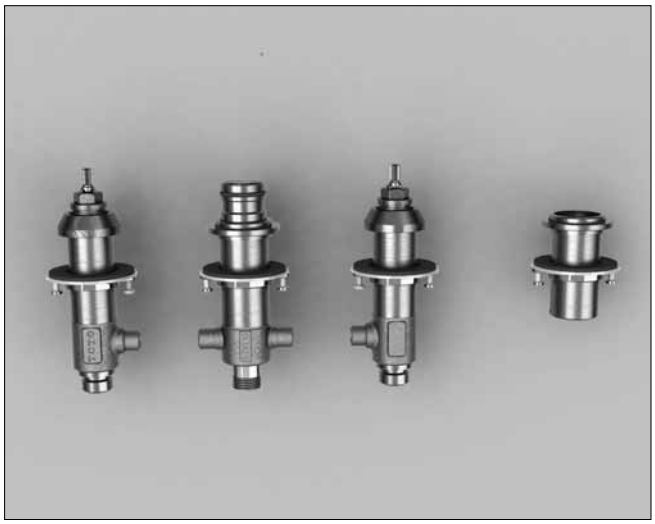

FEATURES

- Brass valve body construction
- 1/2" NPSM
- For use with Deck-Mount Tub Filler Trim with Handshower

CODES/STANDARDS

- Meets or exceeds ASME A112.18.1/CSA B125.1
- Certifications: IAPMO(cUPC), State of Massachusetts and others
- Code Compliance: UPC, IPC, NSPC, NPC Canada, and others

PRODUCT SPECIFICATION

The Deck-mount tub filler with handshower valve shall have 1/2" NPSM connection. Product shall be TOTO Model TBMV. Required Deck-mount tub filler trim with handshower sold separately.

TBMV

Deck-Mount Tub Filler with Handshower Valve

SPECIFICATIONS

- Warranty — Lifetime Limited Warranty (Residential Use) One Year (Commercial Use)
- Shipping Weight — 5.8 lbs.
- Shipping Dimensions — 8"L x 7"W x 5"W

INSTALLATION NOTES

TRIM REQUIRED:
Deck-mount tub filler trim with handshower sold separately.

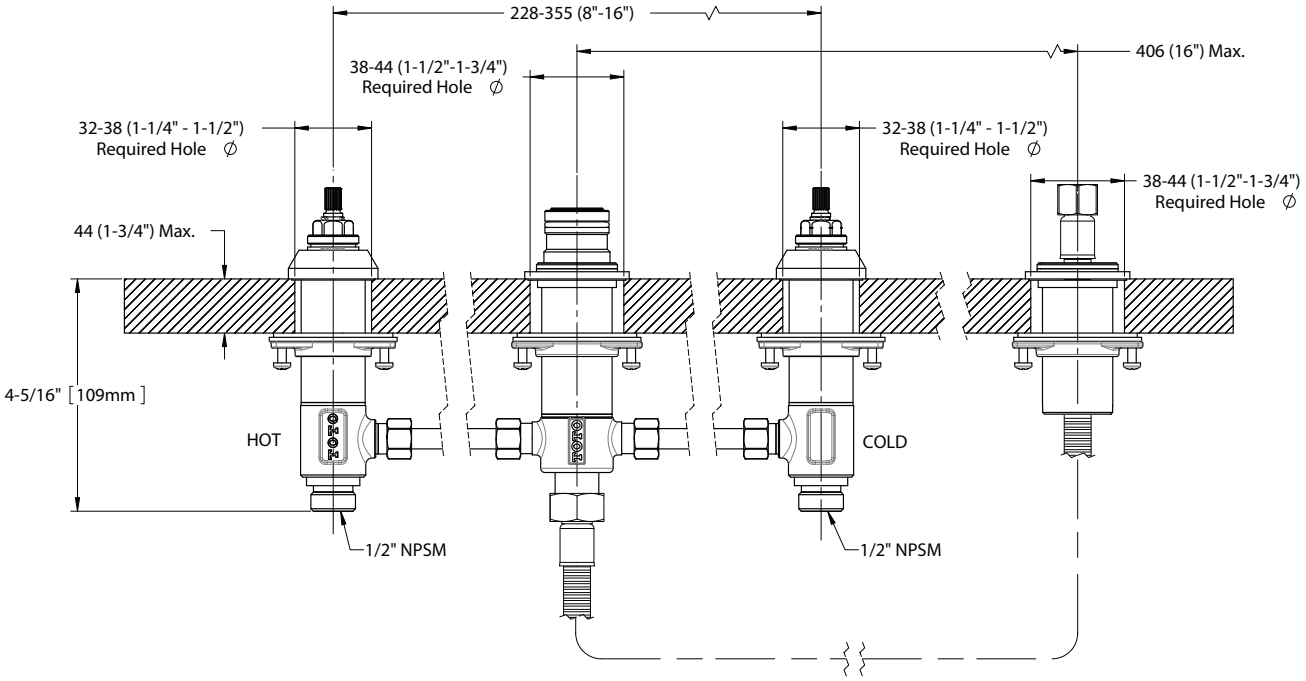

Important Note: This product must be installed after the deck or tub rim is finished.

Printed in U.S.A. | © TOTO USA 9/11 | Printed on recycled paper ♻