TOTO®

TS210D

Silas™ Two-Way Diverter Trim with Off



FEATURES

- Lever handle
- Consistent trim appearance regardless of valve installation depth
- Off position
- For use with the Two-Way Diverter Valve with Off (TSMV)

COLORS/FINISHES

- #CP Polished Chrome
- #BN Brushed Nickel
- #PN Polished Nickel

CODES/STANDARDS

- Meets or exceeds ASME A112.18.1/CSA B125.1
- Certifications: IAPMO(cUPC), State of Massachusetts and others
- Code Compliance: UPC, IPC, NSPC, NPC Canada, and others
- ADA compliant

PRODUCT SPECIFICATION

Two-way diverter trim with off shall have a lever handle. Product shall be TOTO Model TS210D#____ and required valve shall be TSMV sold separately.

TS210D

Silas™ Two-Way Diverter Trim with Off

SPECIFICATIONS

- Warranty — Lifetime Limited Warranty (Residential Use) One Year (Commercial Use)
- Material — Brass
- Shipping Weight — 1.6 lbs.
- Shipping Dimensions — 7"L x 3-1/2"W x 4"H

INSTALLATION NOTES

VALVE REQUIRED:
Two-way diverter valve with off model TSMV sold separately.

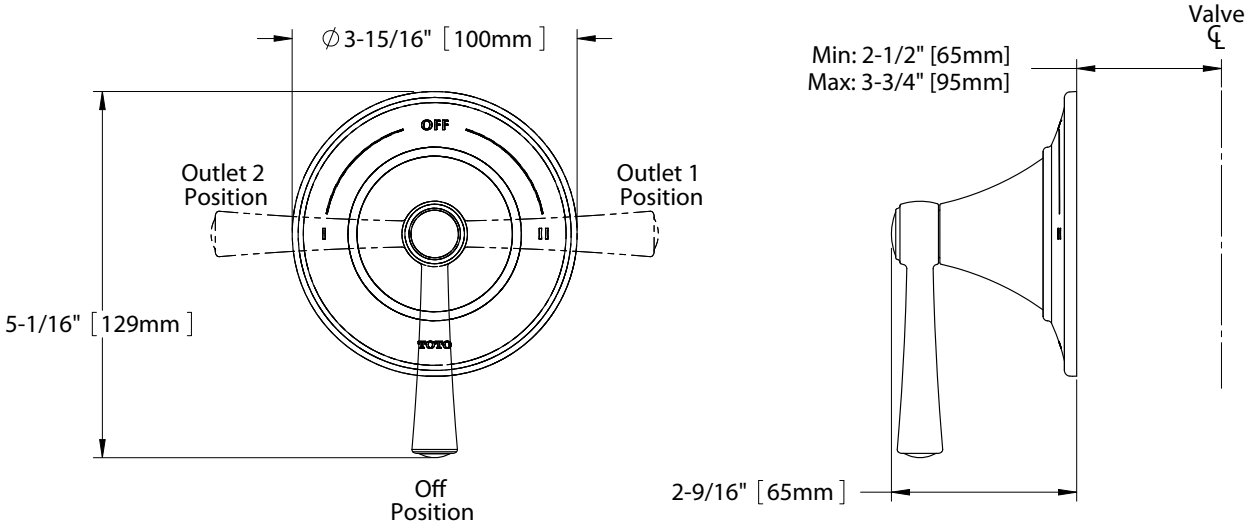

TOTO®

These dimensions and specifications are subject to change without notice

Ph: (888) 295-8134 | Fax: (800) 699-4889 | www.totousa.com

#SS-00815, v.03

Printed in U.S.A. | © TOTO USA 10/11 | Printed on recycled paper ♻