For Commercial and Industrial Applications

Job Name _____ Contractor _____

Job Location _____ Approval _____

Engineer _____ Contractor's P.O. No. _____

Approval _____ Representative _____

LEAD FREE*

Model LF127W

High Capacity Water Pressure Reducing Valve

Size: 3" (80mm)

Model LF127W High Capacity Water Pressure Reducing Valve is designed to reduce incoming water pressure to a sensible level to protect plumbing system components and reduce water consumption. The LF127W is a remote control type regulator ideal for commercial and industrial applications where a regulator must reach full capacity with a minor drop in reduced pressure. This model is also suitable for applications where close pressure regulation is required through extensive volume demand. This model is suitable for water supply pressures up to 175psi (12.1 bar) and may be adjusted from 25 – 100psi (172 – 690 kPa). All parts are quickly and easily serviceable.

The LF127W features Lead Free* construction to comply with Lead Free* installation requirements.



3" (80mm) LF127W

Features

- Lead Free* Brass body construction
- Replaceable stainless steel seat
- Outstanding maintenance features
- Close control of reduced pressure
- High temperature-resisting diaphragm
- Interchangeable diaphragm chamber

Specifications

A Water Pressure Reducing Valve shall be installed on the water service pipe near its entrance to the building where supply main pressure exceeds 60psi (413 kPa) to reduce it to 60psi (413 kPa) or lower. The water pressure reducing valve shall be constructed using Lead Free* materials. Lead Free* regulators shall comply with state codes and standards, where applicable, requiring reduced lead content. Sill cocks and outside wall hydrants may be left on full main pressure at the option of the owner. The valve shall be equipped with a ⅜" (10mm) tapping to receive equalizer piping and a ¾" (20mm) tapping to receive auxiliary regulator piping for low flow requirements. Valve shall be a Watts Model LF127W.

***The wetted surface of this product contacted by consumable water contains less than one quarter of one percent (0.25%) of lead by weight.**

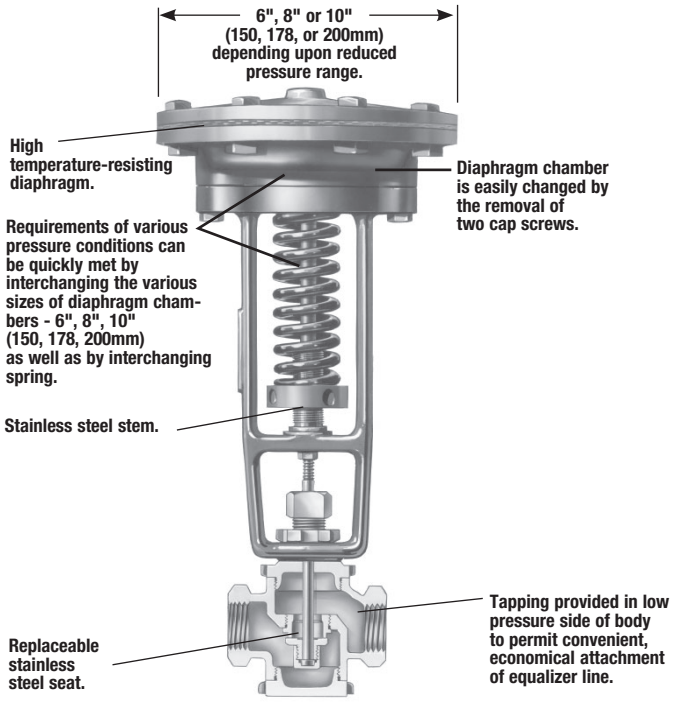

Watts product specifications in U.S. customary units and metric are approximate and are provided for reference only. For precise measurements, please contact Watts Technical Service. Watts reserves the right to change or modify product design, construction, specifications, or materials without prior notice and without incurring any obligation to make such changes and modifications on Watts products previously or subsequently sold.

WATTS®

Materials

Body: Lead Free* Brass

Seat: Replaceable stainless steel

Stem: Stainless steel

Pressure – Temperature

Temperature Range: 33˚F – 160˚F (0.5˚C – 71˚C)

Maximum Working Pressure: 175psi (12.1 bar)

Adjustable Reduced Pressure Range: 25 – 100psi (17 – 690 kPa)

Capacity

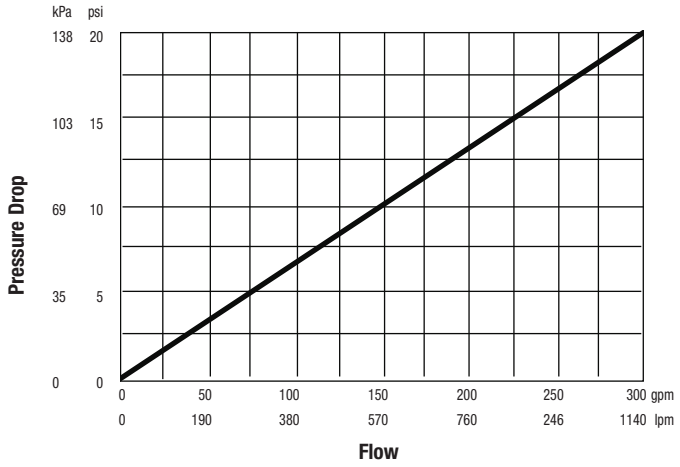

Dimensions – Weights

SIZE (DN)		CONNECTION	DIMENSIONS						WEIGHT	
			A		C		D			
in.	*mm*		*in.*	*mm*	*in.*	*mm*	*in.*	*mm*	*lbs.*	*kgs.*
3"	80	threaded	8	203	16⅛	410	2⅜	60	40	18

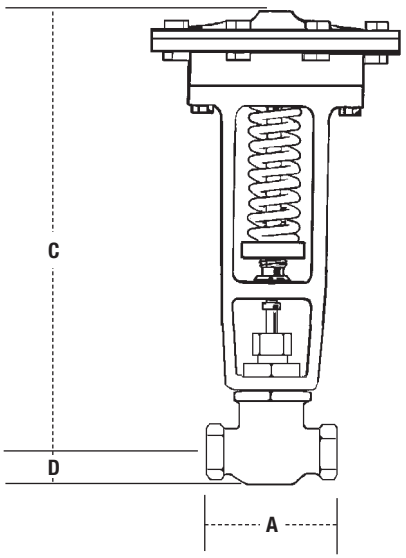

A Watts Water Technologies Company

USA: 815 Chestnut St., No. Andover, MA 01845-6098; www.watts.com
Canada: 5435 North Service Rd., Burlington, ONT. L7L 5H7; www.wattscanada.ca

© 2009 Watts