**For Commercial and Institutional Applications**

Job Name _____ Contractor _____

Job Location _____ Approval _____

Engineer _____ Contractor's P.O. No. _____

Approval _____ Representative _____

# Series 77F-DI-250

## Flanged, Wye Pattern, Ductile Iron Strainers

### Sizes: 2" – 12" (50 – 300mm)

Series 77F-DI-250 Flanged, Wye Pattern, Ductile Iron Strainers feature a one-piece cast body, bolted cover flange with flat gasket seal, 304 stainless steel perforated screens and a drain/blow-off connection plug.



77F-DI-250

### Features

- Flanges conform to American Cast Iron Flange Standard, Class 250 (ANSI B16.1)
- Body meets ASME standards
- One-piece cast body
- Equipped with bolted cover flange that utilizes a flat gasket seal
- Upper and lower machined seats
- 304 Stainless steel perforated screens
- Drain/Blow-off connection furnished with plug
- Generous screen area and properly proportioned straining chamber to minimize initial pressure drop while maximizing time between cleanings

### Specifications

A flanged, wye pattern, ductile iron strainer to be installed as indicated on the plans. The strainer must have a one-piece cast body, bolted cover flange, machined seats, 304 stainless steel perforated screens and a drain/blow-off plug. Pressure rating no less than 500psi (34.47 bars) WOG non-shock and 250psi (17.2 bars) WSP. Strainer body and flanges shall conform to American Cast Iron Flange Standard, Class 250 (ANSI B16.1). Strainer shall be a Watts Regulator Company Series 77F-DI-250.

### Pressure – Temperature

Temperature Range: -20°F (-28.9°C) - 406°F (208°C)

Maximum Operating Pressure:

500psi (34.47 bars) WOG, non-shock, @ 150°F (66°C)

250psi (17.2 bars) WSP @ 406°F (208°C)

### Standard Screens

2" – 3" (50 – 75mm): $^{3}/_{64}$" perforation

4" – 12" (100 – 300mm): $^{1}/_{8}$" perforation

WATTS® REGULATOR

Watts product specifications in U.S. customary units and metric are approximate and are provided for reference only. For precise measurements, please contact Watts Technical Service. Watts reserves the right to change or modify product design, construction, specifications, or materials without prior notice and without incurring any obligation to make such changes and modifications on Watts products previously or subsequently sold.

## Materials

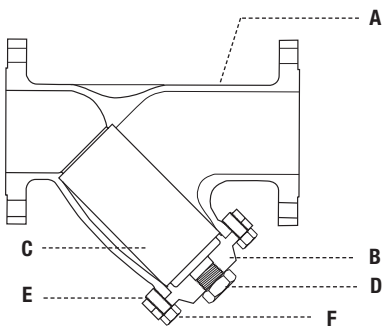


| | | |
|---|---|---|
| **A** | **Body** | Ductile Iron A395 |
| **B** | **Cover** | Ductile Iron A395 |
| **C** | **Screen (1)** | 304 Stainless Steel |
| **D** | **Plug (1)** | Cast Iron, A126-B |
| **E** | **Bolt/Stud (2)** | A307-B |
| **F** | **Nut (2)** | A563 |

## Pressure Drop vs. Flow

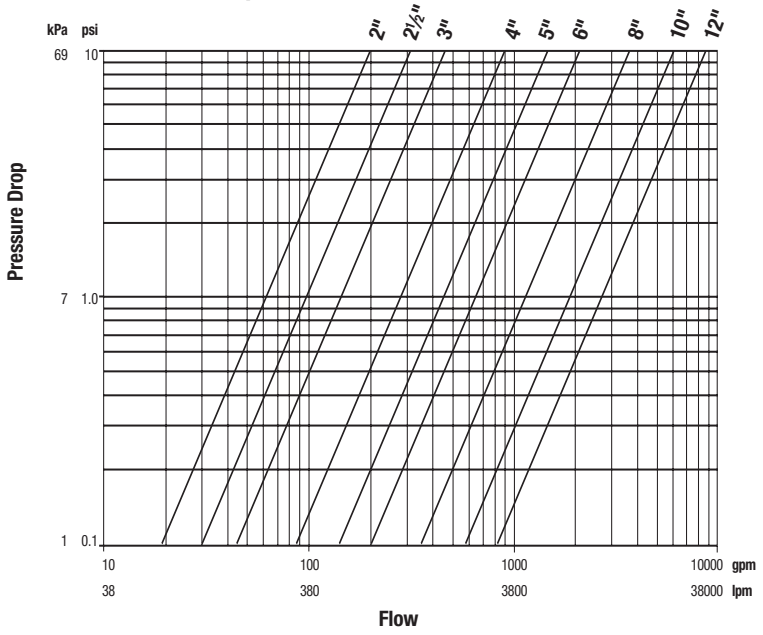


## Dimensions — Weights

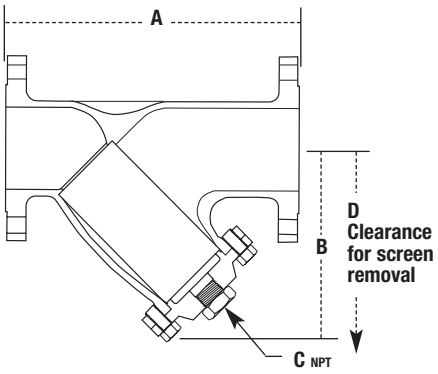


| SIZE (DN) | | DIMENSIONS | | | | | | | | WEIGHT | |
|---|---|---|---|---|---|---|---|---|---|---|---|
| | | A | | B | | C | | D | | | |
| *in* | *mm* | *in* | *mm* | *in* | *mm* | *in* | *mm* | *in* | *mm* | *lbs* | *kgs* |
| 2 | 50 | 8 7/8 | 226 | 6 1/2 | 165 | 1/2 | 15 | 9 1/8 | 232 | 28 | 13 |
| 2½ | 65 | 11 1/4 | 289 | 7 | 178 | 1 | 25 | 9 7/8 | 251 | 38 | 17 |
| 3 | 75 | 11 5/8 | 295 | 8 | 203 | 1 | 25 | 11 1/4 | 286 | 54 | 24 |
| 4 | 100 | 14 1/2 | 368 | 10 3/4 | 273 | 1 | 25 | 15 | 381 | 110 | 50 |
| 5 | 125 | 17 3/8 | 441 | 13 1/2 | 343 | 1 1/4 | 32 | 19 | 483 | 160 | 73 |
| 6 | 150 | 18 3/4 | 476 | 16 1/4 | 413 | 1 1/2 | 40 | 22 3/4 | 578 | 224 | 102 |
| 8 | 200 | 21 7/8 | 556 | 19 1/2 | 495 | 1 1/2 | 40 | 27 3/4 | 692 | 468 | 212 |
| 10 | 250 | 27 1/4 | 692 | 21 1/4 | 540 | 2 | 50 | 29 3/4 | 756 | 590 | 268 |
| 12 | 300 | 31 3/8 | 797 | 25 | 635 | 2 | 50 | 35 | 889 | 890 | 404 |


**USA:** 815 Chestnut St., No. Andover, MA 01845-6098; www.wattsreg.com
**Canada:** 5435 North Service Rd., Burlington, ONT. L7L 5H7; www.wattscanada.ca




© Watts Regulator Co., 2004