Freezeless Roof Hydrant

Model RHY2-MS

Can be ordered with or without Mounting System (MS).

The patented Woodford RHY2-MS provides water availability for window washing, cleaning of condenser coils, cooling towers and other types of roof equipment. The RHY2 is backflow protected with an ASSE 1052 double check backflow preventer that is field testable. The backflow device does not require removal for drain down. The RHY2 has a built in vent that allows drainage. Valve body of hydrant is drilled and tapped with ⅛″ drain hole which must be piped to a drain location.

The RHY2-MS allows for installation flexibility since it is not necessary to install hydrant when the patented Mounting System is bolted to the roof. The Mounting System utilizes a 3″opening that allows the hydrant to be installed later if desired. All necessary mounting hardware for proper installation on a commercial roof is supplied, including a 2 degree shim for pitch adjustment.

Hydrant Features:

- Rod guide eliminates side pull on rod, reduces wear on packing, packing nut & stem.
- Adjustable link for easy adjustment and positive lever lock tension.
- One piece variable flow plunger with large cushion type seal for longer life is not easily damaged and assures shut-off even when foreign particles are present.
- Hydrant automatically drains when shut off even with hose attached.
- All hydrant repairs can be made from top of unit without removing hydrant. Parts are readily available.

Specifications:

- Hose Connection Backflow Preventer:
  - Model 50HF with ¾″ hose connection
  - ASSE 1052 Listed
  - Field Testable Dual Check holds against 125 psi backflow pressure
- 1″ NPT female inlet connection
- 1 ¼″ U.S. made galvanized pipe casing
- **Maximum Working Pressure:** 100 p.s.i.
- **Maximum Temperature:** 120° F
- ⅛″ NPT Drain hole *(Must be piped to a drain location)*

Mounting System: *(Can be ordered Separately)*

- Cast iron Hydrant Support
- Cast iron Under Deck Flange
  - 4 bolts draw tight against the roof decking and the hydrant support.
  - 3 clamp screws tighten against the hydrant pipe to secure the hydrant's vertical position through the roof.
- Well Seal seals tight between the hydrant support and hydrant pipe.
- EPDM Boot covers well seal and top of hydrant support.
- 2° Shim is supplied, if needed, for installation on pitched roofs.

Manufactured under U.S. patent 7,472,718; 7,730,901 and patents pending.

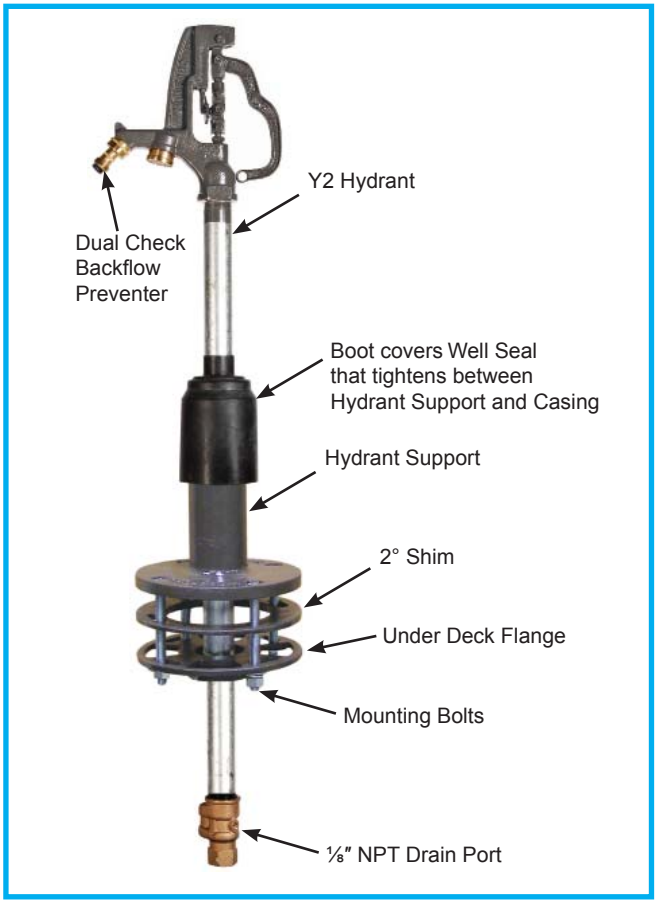

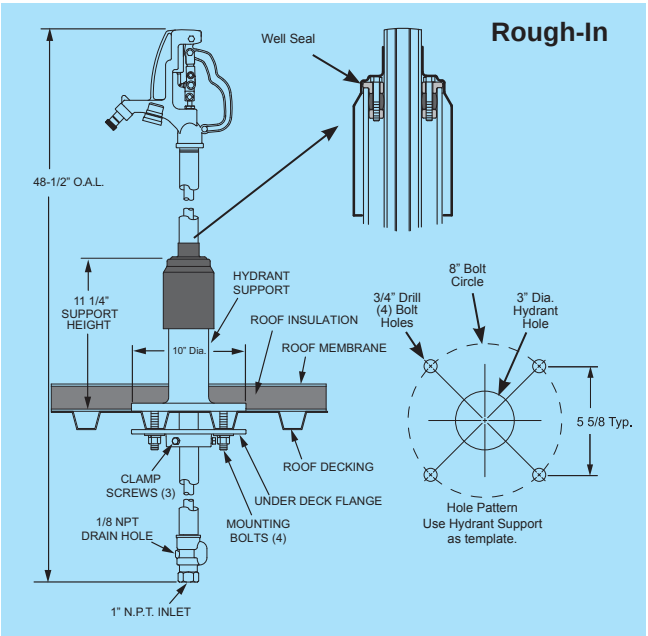

For Installation / Troubleshooting Instructions go to www.woodfordmfg.com or call 1-800-621-6032

©2010 WOODFORD Mfg. 0207

Rev. 11/10 Form No. RHY2.104

WOODFORD®

Woodford Excellence Since 1929
Proudly Made In The U.S.A.

MODEL RHY2-MS PARTS LIST

ITEM	PART#	DESCRIPTION
	15245	RHY2 Head Assembly (Includes Items 1-16)
1	10612	RHY2 Head
2	50HF-BR	50HF Backflow Preventer - Brass
3	15238	Diverter Assembly
4	10100	Packing Nut
5	10101	Packing
6	10102	Packing Support Washer
7	10104	Brass Rod Stem
8	10011	Reducing Coupling
9	10206	Hex Nut (3)
10	10614	RH Upper Link
11	15242	RH Lower Link (Includes Item 12)
12	10019	Set Screw (2)
13	15243	RH Cam & Clevis Assembly
14	10020	Link Bolt (2)
15	10021	Lever Bolt
16	10613	RH Lever
17	10017	Valve Body (1" NPT Inlet)
18	10106	Plunger
19	10023	Operating Pipe (35-1/2" Long)
20	10608	Boot, EPDM 1 1/4" Pipe
21	10606	Bolt, Hex Head 1/4-20 X 1 3/4" (4)
22	10582	Well Seal, Top
23	10609	Well Seal, EPDM
24	10583	Well Seal, Bottom
25	10584	Bolt, Hex Head 5/8-11 X 6" (4)
26	10579	Hydrant Support, Casting
27	10581	2° Shim, Casting
28	10580	Under Deck Flange
29	10607	Screw, Clamp 3/8-16 Hex Head X 1 3/4" (3)
30	10604	Washer, Plain 5/8 (4)
31	10605	Washer, Lock 5/8 (4)
32	10585	Nut, Hex 5/8-11 UNC (4)
	RK-Y1	Repair Kit (Includes items 4-7 & 18)
	RK-RHL	Repair Kit (Includes items 9-15)

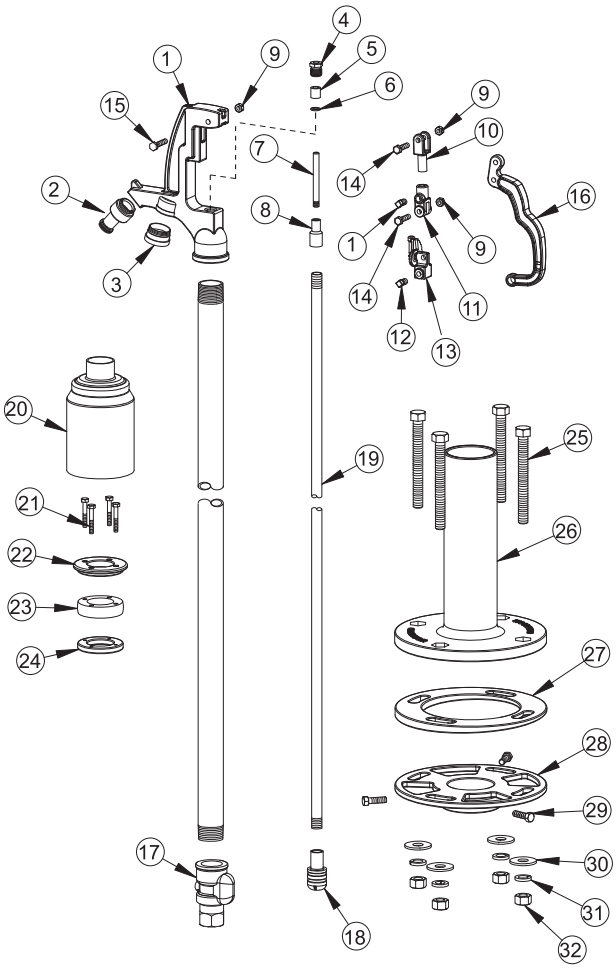

When ordering, specify RH part number option listed below.

Part# RHY2-MS
Consists of the complete Roof Hydrant system:
Qty.1 **RHY2**
Y2 Hydrant shipped in 1 carton.
Qty. 1 **RH-MS**
Mounting System shipped in 1 carton.

Total Shipping Wt.
2 cartons: 50 lbs

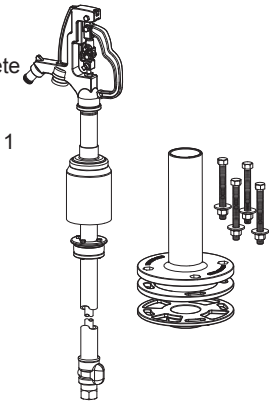

Part# RH-MS
Carton contents consists of:
Mounting System/ Rough-In Components (Parts 25-32 above)
- Hydrant Support
- 2° Shim,
- Under Deck Flange
- Mounting Bolts, Nuts, Washers.

Shipped in 1 Carton.
Shipping Wt. - 30 lbs

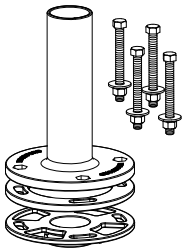

Part# RHY2
Carton contents consists of:
- Y2 Hydrant Assembly (Parts 1-19 above)
- Well Seal (Parts 21-24 above)
- Boot (Part 20 above)

Shipped in 1 Carton.
Shipping Wt. - 20 lbs

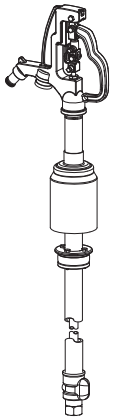

For more information contact...

WOODFORD MANUFACTURING COMPANY

2121 Waynoka Road, Colorado Springs, Colorado 80915 • **Phone:** (800) 621-6032 • **Fax:** (800) 765-4115
To view our complete product line visit: ***www.woodfordmfg.com*** *or email:* ***sales@woodfordmfg.com***
A Division Of WCM Industries, Inc.