Touchless Soap Dispenser, Square, 2~3 Spout, Controller and Tank Reservoir with Sub Tank

Product Number Kit#	Spout#	Controller# / Tank
TES204AE**#CP	TLK08001G#CP *2	TLK01106U(A)** / TLK01401U
TES205AE**#CP	TLK08001G#CP *3	TLK01107U(A)** / TLK01401U
TES204AF**#CP	TLK08002G#CP *2	TLK01106U(A)** / TLK01401U
TES205AF**#CP	TLK08002G#CP *3	TLK01107U(A)** / TLK01401U
TES204AG**#CP	TLK08003G#CP *2	TLK01106U(A)** / TLK01401U
TES205AG**#CP	TLK08003G#CP *3	TLK01107U(A)** / TLK01401U

Spout

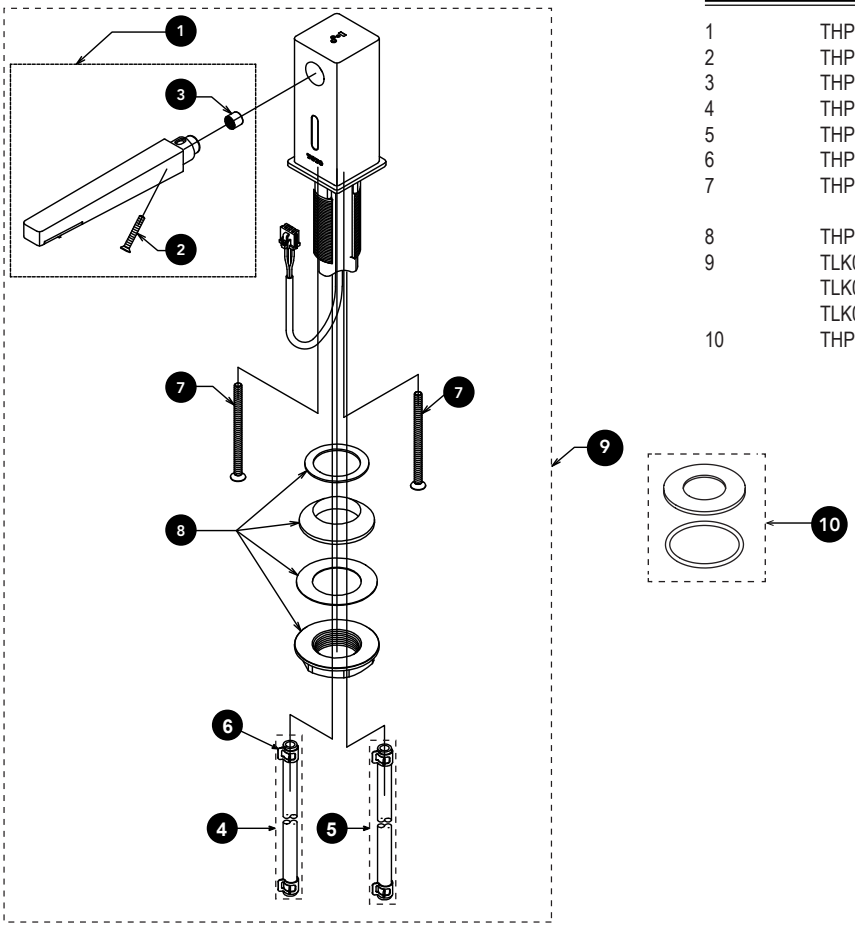

Item	Part	Description
1	THP3491#CP	Spout Nozzle Piece (Square)
2	THP3497	Screw (1 pc)
3	THP3496	Filter
4	THP3342	Blue Air Hose (L=66-15/16”, 1700mm)
5	THP3341	Clear Soap Hose (L=78-3/4”, 2000mm)
6	THP3439	Hose Clamp
7	THP3487	Screw (1 pc, for TLK08001G#CP spout only)
8	THP3489	Nut w/ Gaskets and Slip Washer
9	TLK08001G#CP	Spout Square
	TLK08002G#CP	Spout Square Semi-Vessel
	TLK08003G#CP	Spout Square Vessel
10	THP3140#C	Escutcheon for 1-1/8"~1-1/2" (28~38mm)

Touchless Soap Dispenser, Square, 2~3 Spout, Controller and Tank Reservoir with Sub Tank

Controller and Tank Reservoir

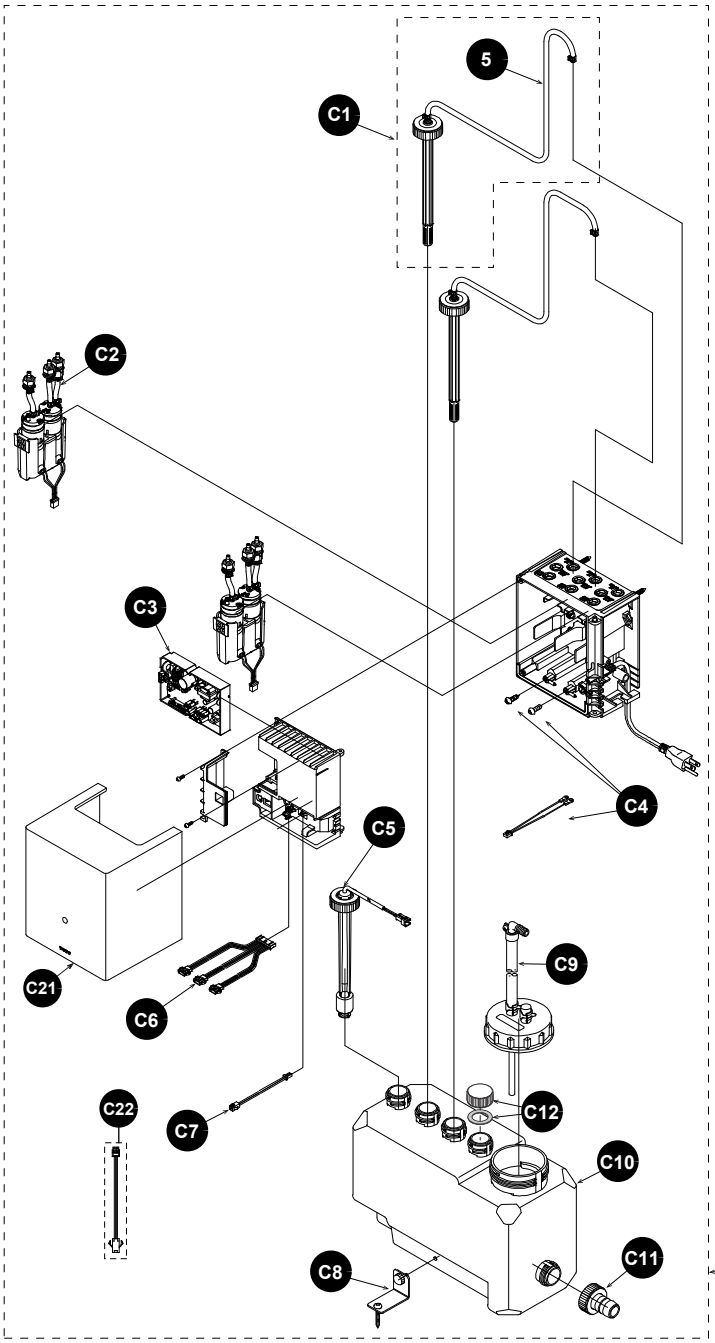

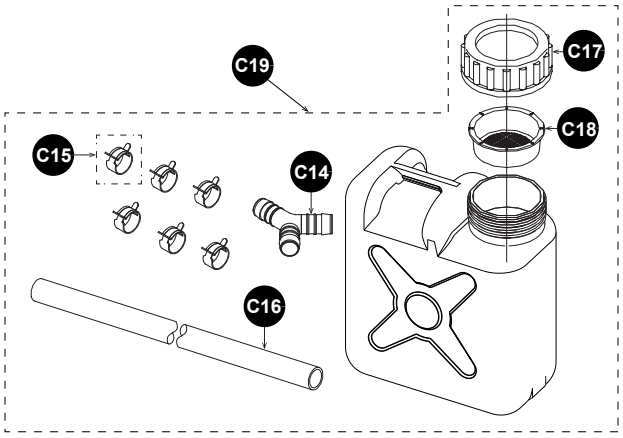

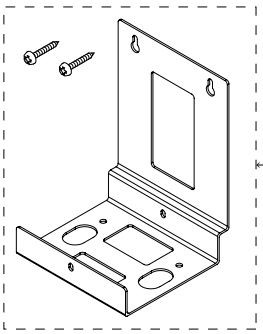

Item	Part	Description
C1	THP3343	Tank Joint x2 for TES204A* Tank Joint x3 for TES205A*
C2	THP3344	Soap and air pump x2 for TES204A* Soap and air pump x3 for TES205A*
C3	THP3391	Controller Board
C4	THP3346	Ground wire w/ screws
C5	THP3347	Float switch
C6	THP3348	Sensor sockets
C7	THP3349	Float switch connector
C8	THP3350	Soap tank bracket set
C9	THP3353	Air deflation hose set
C10	THP3354	Soap tank
C11	THP3355	Coupling cap
C12	THP3364	Cap
C13	TLK01106UA	Controller for 2 Spout & Resevoir
	TLK01107UA	Controller for 3 Spout & Resevoir
	TLK01106UiA	IoT Controller for 2 Spout & Resevoir
	TLK01107UiA	IoT Controller for 3 Spout & Resevoir
C14	THP3369	Y-Shaped Nipple
C15	THP3370	Hose Clamp
C16	THP3371	Connecting Tube, 16.4' (5m)
C17	THP3372	Cap, Sub Tank
C18	THP3373	Strainer, Sub Tank
C19	TLK01401U	Sub Tank
C20	THP3374	Mount Bracket
C21	THP3393	Cover, for IoT Controller Only
C22	THP3392	IoT wire harness
C23		IoT communication card, please contact TOTO sales representative or technical support for more information