SUBMITTAL DATA SHEET

NL Ball Style Curb Stop – 76101DU

FNPT x FNPT

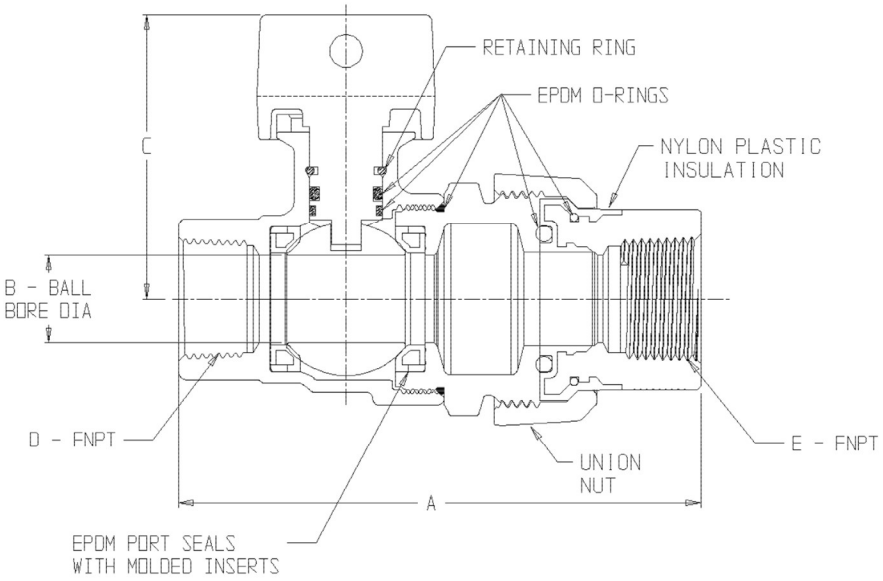

MODEL	SIZE	A	B	C	D	E
76101DU	3/4	4.50	.75	2.39	3/4	3/4
76101DU	1 X 3/4 X 3/4	4.65	.75	2.39	1	3/4
76101DU	1 X 3/4 X 1	5.36	.75	2.39	1	1
76101DU	1	5.00	1.00	2.65	1	1
76101DU	1 1/4 X 1 X 1	5.14	1.00	2.65	1 1/4	1

SUBMITTAL INFORMATION

- Manufactured in compliance with ANSI/AWWA C800 (latest revision)
- Brass components in contact with potable water conform to ASTM B584, UNS C89833 (latest revision) and identified with “NL”
- Certified to NSF/ANSI 61 and NSF/ANSI 372
- Brass components not in contact with potable water conform to ASTM B62 and ASTM B584, UNS C83600 -85-5-5-5 (latest revision)
- PTFE coated brass ball
- Valve rated for 300 PSIG water pressure, end connections not to exceed rated pipe pressures.
- Blow out proof EPDM port seals
- End piece joint sealed with an EPDM o-ring and thread locker

A.Y. McDonald Mfg. Co.
4800 Chavenelle Rd
Dubuque, IA 52002

Toll Free: 1-800-292-2737
sales@aymcdonald.com
aymcdonald.com

A.Y. McDonald considers the information on this assembly drawing correct when published. Item and option availability, including specifications, are subject to change without notice.

Submitted by: