SUBMITTAL DATA SHEET

NL Meter Coupling – 74624DU

Meter Swivel Nut x Di-electric MNPT

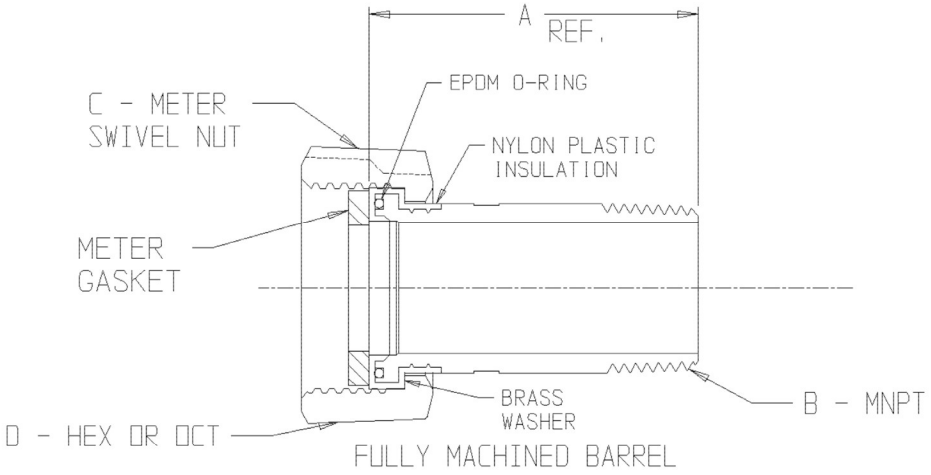

MODEL	SIZE	A	B	C	D
74624DU	3/4 X 3/4 X 1.50	1.50	3/4	5/8 X 3/4, 3/4	OCT
74624DU	3/4 X 3/4 X 2.00	2.00	3/4	5/8 X 3/4, 3/4	OCT
74624DU	3/4 X 3/4 X 2.50	2.50	3/4	5/8 X 3/4, 3/4	OCT
74624DU	1 X 1 X 1.50	1.50	1	1	HEX
74624DU	1 X 1 X 2.00	2.00	1	1	HEX
74624DU	1 X 1 X 2.50	2.50	1	1	HEX

SUBMITTAL INFORMATION

- Manufactured in compliance with ANSI/AWWA C800 (latest revision)
- Brass components in contact with potable water conform to ASTM B584, UNS C89833 (latest revision) and identified with "NL"
- Certified to NSF/ANSI 61 and NSF/ANSI 372
- Brass components not in contact with potable water conform to ASTM B62 and ASTM B584, UNS C83600 -85-5-5-5 (latest revision)
- Large wrench area provided for proper installation

A.Y. McDonald Mfg. Co.
4800 Chavenelle Rd
Dubuque, IA 52002

Toll Free: 1-800-292-2737
sales@aymcdonald.com
aymcdonald.com

A.Y. McDonald considers the information on this assembly drawing correct when published. Item and option availability, including specifications, are subject to change without notice.

Submitted by: