Electric Hydrostatic Test Pumps

Replacement Parts

PIPE TOOLS & VISES
SINCE 1896

Applies to: 08170, 08171, 08172, 08173, 08174, 08175, 08176, 08177, 08179

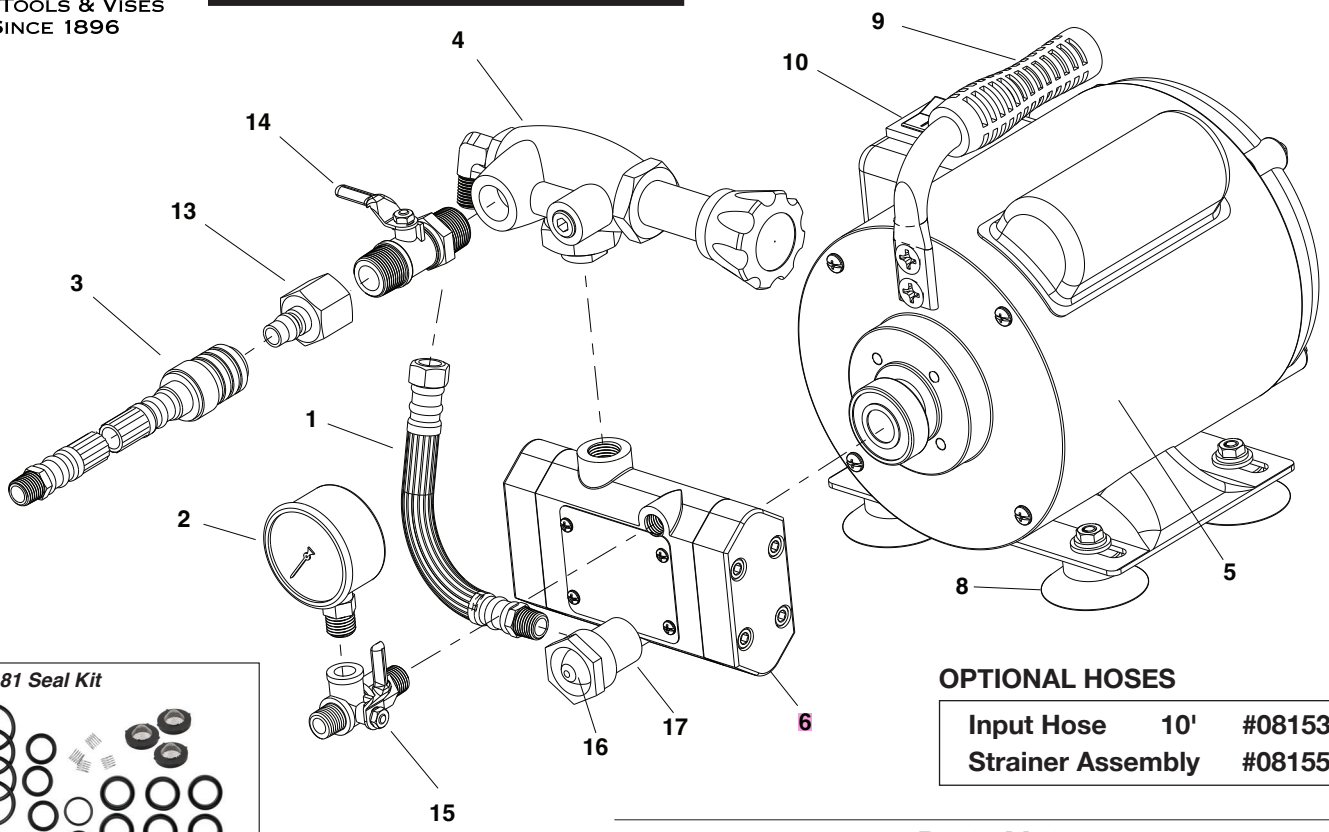

OPTIONAL HOSES

Input Hose	**10'**	**#08153**
Strainer Assembly		**#08155**

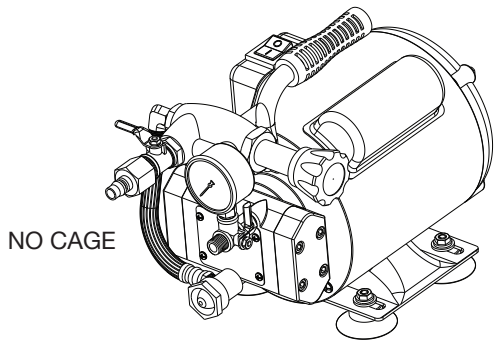

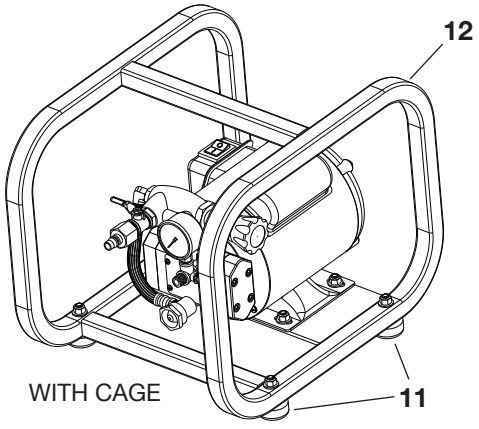

Parts List

ITEM	DESCRIPTION	EHTP500 EHTP500E EHTP500EU ITEM CODE	EHTP500C EHTP500CE EHTP500CEU ITEM CODE	QTY.
1	BYPASS HOSE	48183	48183	1
2	PRESSURE GAUGE	48185	48185	1
3	HIGH PRESSURE OUTPUT HOSE	08172	08172	1
4	REGULATOR ASSEMBLY	48189	48189	1
5*	MOTOR ASSEMBLY 110V**	48187	48187	1
6	PUMP ASSEMBLY	48188	48188	1
7	SEAL KIT	98181	98181	1
8	PUMP FEET	48190	—	4
9	CARRYING HANDLE	48191	—	1
10	ELECTRIC SWITCH / COVER	48193	48193	1
11	CAGE FEET	—	48186	4
12	CAGE WITH FEET	—	48195	1
13	MALE QUICK CONNECT	48200	48200	1
14	HIGH PRESSURE VALVE	48201	48201	1
15	3-WAY VALVE	48202	48202	1
16***	HOSE WASHER W/SCREEN	98180	98180	1
17	INTAKE HOSE FITTING	48204	48204	1

* Motor Assembly also includes #8, #9 and #10.

** For 220V replacement motor, customer will purchase 48187 110V motor and rewire to 220V with their own new plug or reuse original plug. Wiring instructions are under the switch cover of the motor.

*** Sold in packs of 3 screens / priced per pack.

Reed Manufacturing
1425 West 8th Street
Erie, PA 16502 USA

QUALITY & Service that Last a Lifetime

Phone: 800-666-3691 or +1 814-452-3691
reedsales@reedmfgco.com
www.reedmfgco.com

Electric Hydrostatic Test Pumps

Replacement Parts

Diagram for models sold before July 2013.

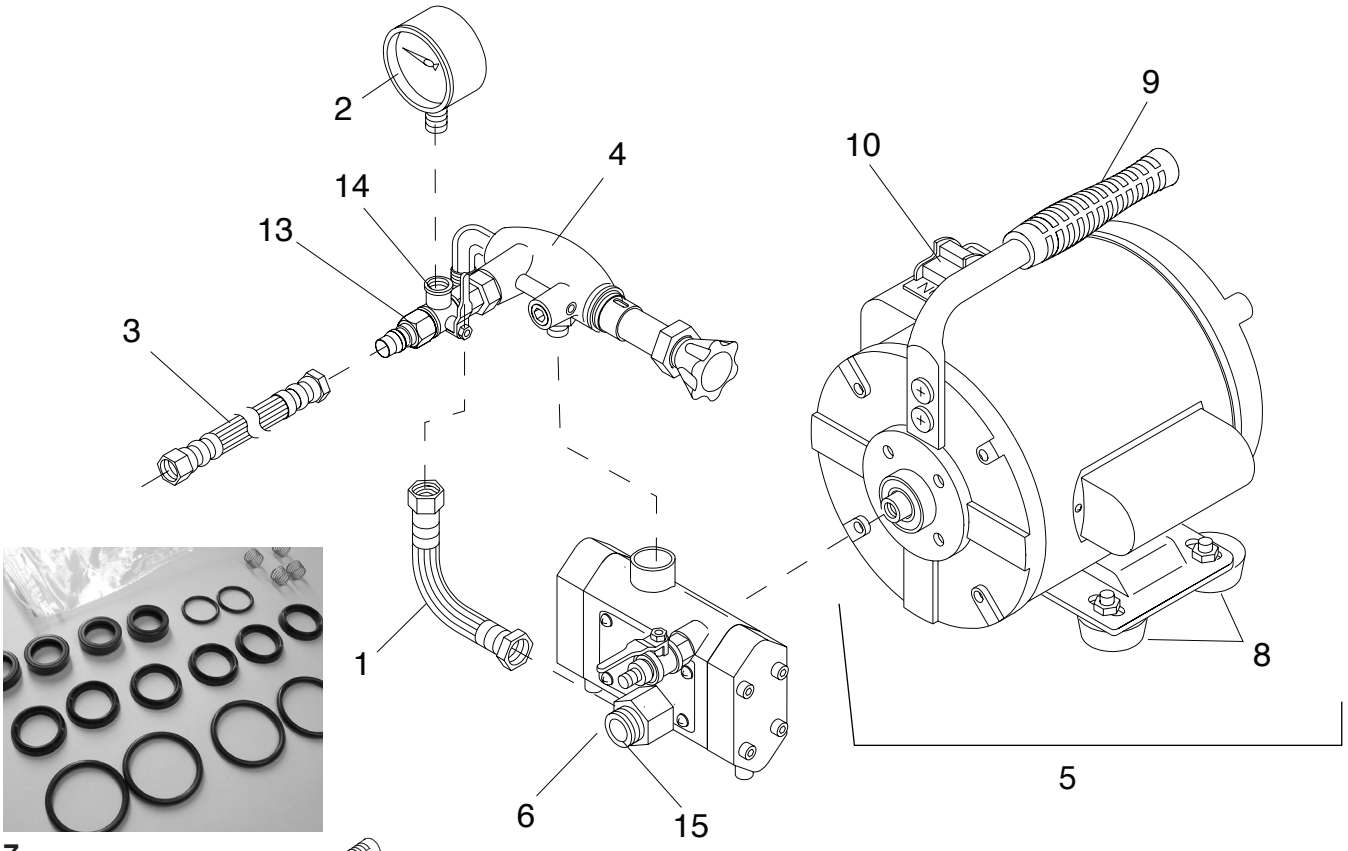

7

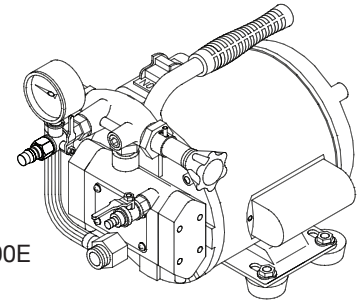

EHTP500
or EHTP500E

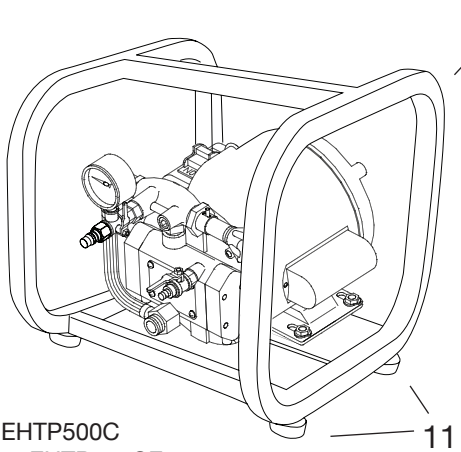

EHTP500C
or EHTP500CE

Parts List

ITEM	DESCRIPTION	EHTP500 EHTP500E ITEM CODE	EHTP500C EHTP500CE ITEM CODE	QTY.
1	BYPASS HOSE	48183	48183	1
2	PRESSURE GAUGE	48185	48185	1
3	HIGH PRESSURE OUTPUT HOSE	08172	08172	1
4	REGULATOR ASSEMBLY	48189	48189	1
5a*	MOTOR ASSEMBLY 110V.	48187	48187	1
5b*	MOTOR ASSEMBLY 220V.	48196	48196	**
6	PUMP ASSEMBLY	48188	48188	1
7	SEAL KIT	48181	48181	1
8	PUMP FEET	48190	—	4
9	CARRYING HANDLE	48191	—	1
10	ELECTRIC SWITCH / COVER	48193	48193	1
11	CAGE FEET	—	48186	4
12	CAGE WITH FEET	—	48195	1
13	MALE QUICK CONNECT	48197	48197	1
14	3-WAY VALVE	48202	48202	1
15***	HOSE WASHER W/SCREEN	98180	98180	1

* Motor Assembly also includes #8, #9 and #10.

** Choose the proper voltage.

*** Sold in packs of 3 screens / priced per pack.