GSUL Safe Ground Indicator System

Prevents operation of pumps without a safe ground for static dissipation.

Class I, Division 1, Groups C, D, and Zone 1, Groups IIB, IIA; NEMA 7 Class II, Division 1, Groups E, F, G; NEMA 9

Instant Visual Confirmation of Safe Ground

The Russellstoll® GSUL Safe Ground Indicator System is designed to ensure that a safe ground has been established for dissipating ever-present static electricity from tank vehicles, carriers, drums and other conductive equipment before allowing the transfer of flammable materials. The GSUL indicates the establishment of a safe ground via two parallel-connected green signal lights. Two lights are used for redundancy — if one lamp burns out, visual indication of safe grounding will be maintained by the other.

Intrinsically Safe Circuitry

The GSUL Safe Ground Indicator System features an intrinsically safe, low-energy ground-sensing circuit, which does not carry sufficient electrical energy to cause ignition in classified Hazardous Locations.

In operation, the ground-sensing circuit extends through the grounding clamp and its connection to the ground indicator, the metal portion of the vehicle between the jaw terminals of the clamp and earth ground electrode.

Pumps Won't Operate Until Safe Ground Is Established

A control relay in the GSUL Safe Ground Indicator System provides interlocked control of pump motors at the loading platform. The electronic control circuit will be de-energized while the green lights are off. Attaching the clamps to the tank closes the interlocking contact and energizes the control circuits to the motors.

Applications

Volatile or classified areas such as:

- Tank farms
- Petrochem
- Cosmetics
- Grain mills
- Vehicular or rail transport

Specifications

Enclosure: Cast copper-free aluminum with epoxy powder-coated finish
Outlets: Regularly furnished tapped ¾" NPT
Relay Contacts: Rated ⅓ HP, 10A, 120VAC; ½ HP, 10A, 240VAC
Certifications: UL® Listed, CSA Certified

E33553





Unit shown with covers removed

Thomas&Betts
A Member of the ABB Group

United States
Tel: 901.252.8000
800.816.7809
Fax: 901.252.1354

Technical Services
Tel: 888.862.3289

www.tnb.com

GSUL Safe Ground Indicator System

GSUL Safe Operating Features

- Two redundant, parallel green indicator lights glow when safe ground is established
- Lamps offer approximately 20,000 hours of operating life
- Unit may be ordered without lights where remote visual indication is desired
- Intrinsically safe, simplified circuitry
- Integral, intrinsically safe wiring compartment with approved strain-relief fitting for connection of cable from grounding clamp
- Solid-state actuating and control circuits mounted on removable printed circuit board
- Enclosure protects components against moisture
- Control relay provided for interlocked control of pump motor at loading rack
- Grounding clamp (ordered separately) provides dual isolated tip contacts in a heavy-duty cast-aluminum handle design

Wiring Diagram

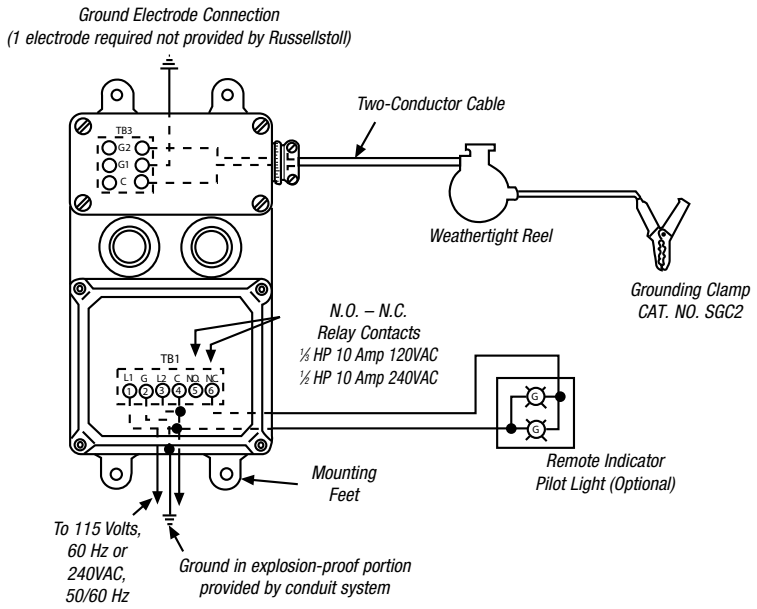



GCC1

Aerospace/Industrial Static Ground Devices

Static grounding receptacles are used in airport and aerospace installations worldwide during fueling, testing and maintenance procedures. Normal mounting is concrete/tarmac floor inset, threaded onto copper ground rod.

Heavy brass construction cup includes optional cover and receptacle's contact pin. Accommodates a wide variety of single-contact (copper on steel wire) static ground wire clamps in service.

CAT. NO.	DESCRIPTION
GCC1	Ground cup with cover*
GC1	Ground cup without cover*
F06146	Replacement contact tip**

** Hub is tapped for ¾"–10.*
*** Hub is tapped for ½"–13.*

Typical Installation

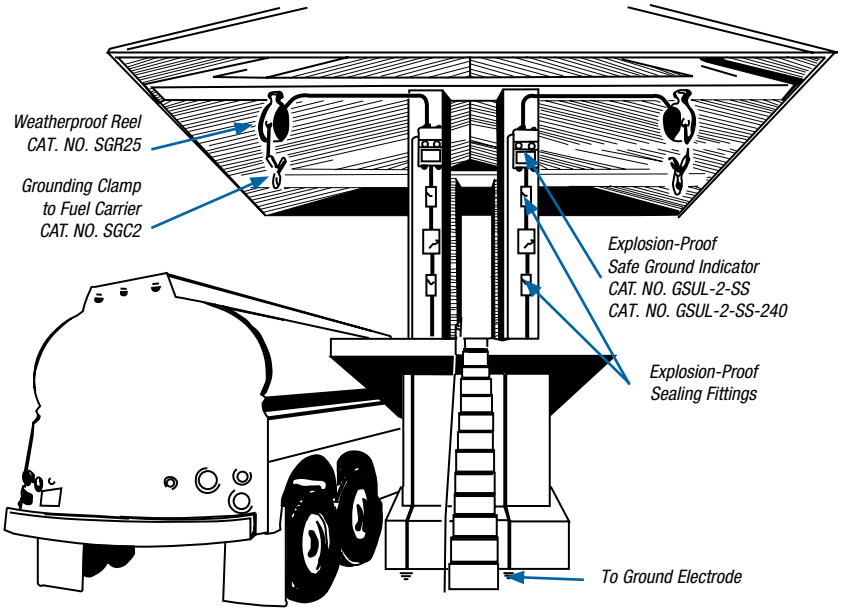

Loading rack illustration suggests a typical installation, which includes an Explosion-Proof Switch, Explosion-Proof Sealing Fittings, Weathertight Reel and the GSUL-2-SS Safe Ground indicator with 2-wire grounding clamp.

GSUL Safe Ground Indicator System



GSUL-2-SS

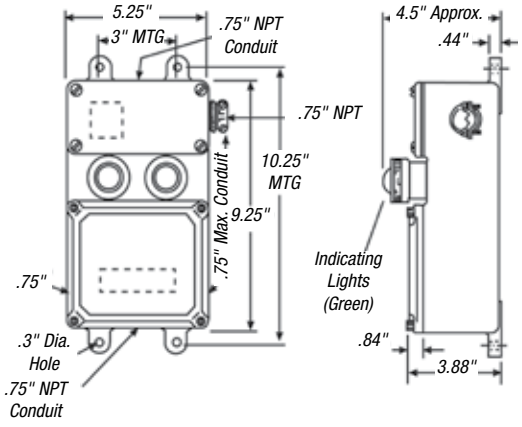



SGC2



SGR25
SGR50
SGR75

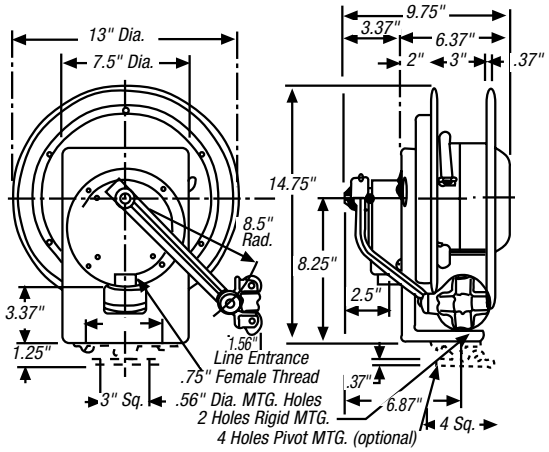

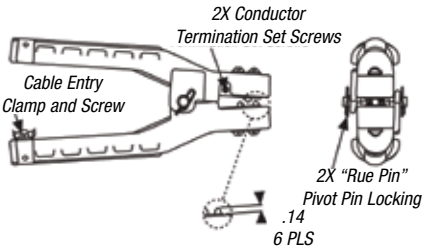

CAT. NO.	DESCRIPTION
GSUL2SS	Safe Ground Indicator with Indicator Lights, 120V, UL®/CSA
GSUL2SS-240	Safe Ground Indicator with Indicator Lights, 240V, CSA
SGC2	Safe Ground Static Clamp
SGR25	Weathertight Retracing Reel with 25 ft. of 12/2 SJO-W Cable
SGR50	Weathertight Retracing Reel with 50 ft. of 12/2 SJO-W Cable
SGR75	Weathertight Retracing Reel with 75 ft. of 12/2 SJO-W Cable
Replacement Parts for GSUL	
C13662	Printed Circuit Board, 120 Volts (includes relay)
GX24RCB	Printed Circuit Board, 240 Volts (includes relay)
F30674	Control Relay
F30602	Lamp Socket Assembly
ELAG	Pilot Light Globe Assembly (green)
310993	Lamp for GSUL2SS
Replacement Parts for SGC2	
GX2TK	Ground Clamp Repair Kit

Thomas&Betts
A Member of the ABB Group

United States
Tel: 901.252.8000
800.816.7809
Fax: 901.252.1354

Technical Services
Tel: 888.862.3289

www.tnb.com