# USER HANDBOOK

# for EDT BEARINGS

(Updated October 2015)

- **PRODUCT GUIDE**
- **INSTALLATION**
- **GENERAL OPERATION**
- **MAINTENANCE**
- **LUBRICATION**
- **TROUBLE SHOOTING**

**EDT Corp** ■ 1006-J NE 146th Street, Vancouver, WA 98685 USA
PHONE 360-574-7294 ■ FAX 360-574-3834 ■ edtcorp.com ■ edtsales@edtcorp.com

# Table of Contents


EDT Bearing Selection Guide ..... 3

What are Plane Bearings: Definitions of Class I, II, III, IV Plane Bearings ..... 4

Bearing Design Checklist (BDC) ..... 5

PV Calculation Chart and Worksheet ..... 6

Installation Instructions

- Poly-Round® Bearings: Installing into EDT housing ..... 7
- Mounted Bearings ..... 8
- Poly-Round® Bearings: Installing into NON-EDT housing ..... 9
- All-Round® Bearings: Replacing flange bearings into spherical inserts ..... 10
- All-Round® Bearings: Installing spherical insert into housing ..... 11
- Ball Bearings: Installing into housing ..... 12
- Ball Bearings: Installing unit onto equipment ..... 13
- High Temperature Locations: Installing EDT bearings ..... 14
- Polymer Block Bearings ..... 15
- Stainless Take-Up Frames ..... 16
- Unmounted Bearings ..... 17
- Bearing Glove® ..... 18
- Glove® 2 ..... 19–20

Special Application Conditions

- Abrasion ..... 21
- Cold ..... 21
- Heat ..... 22
- Horizontal Shafts – in ovens, all others, upside-down bearings ..... 22–23
- Bearing position in drive design ..... 23
- Restricted spaces ..... 23
- Vertical shafts ..... 25
- Vibration & impact ..... 25

Installation and General Information about EDT Bearings ..... 26

Ways to Increase Bearing Performance ..... 27

Maintenance and Lubrication of EDT Bearings ..... 28

Troubleshooting EDT Bearings ..... 29

# EDT Bearing Selection Guide

## A quick application reference for EDT products

This is a general reference. For specific recommendations concerning your applications, contact EDT Corp or your local distributor account manager. You will be asked to complete a Bearing Design Checklist (BDC) to assist in this process. A blank Bearing Design Checklist can be found on page O-5.

| Bearing application | Type of bearing to use | Refer to this catalog or website section |
|---|---|---|
| Modular plastic belt conveyor | NA Poly-Round® bearing | **B (Amber)** - Poly-Round® Solution® |
| Wire belt conveyor (flat- or round-wire) | NA Poly-Round® bearing | **B (Amber)** - Poly-Round® Solution® |
| Wire belt conveyor in oven, idler rollers | QF Poly-Round® bearing in metal housing (Note: in most cases cast iron housings are used inside ovens) | **F (Lt. Gray) -** Stainless Spherical Solution® Housings *and* **C (Dk Blue) -** Poly-Round® Bearings |
| Wire belt conveyor in ovens, head and tail puleys | Ball or other rolling element; standard or solid-lubricated | **F (Lt. Gray) -** Stainless Ball Solution® |
| Submerged fryer | FA Poly-Round® bearing in stainless housing for direct food contact<br>QF Poly-Round® bearing in stainless housing for incidental food contact | **C (Dk Blue) -** Poly-Round® Bearings *and* **F (Lt. Gray) -** Stainless Spherical Solution® Housings |
| Flat-belt and urethane belt conveyor | Ball or other rolling element; standard or solid-lubricated | **F (Lt. Gray) -** Stainless Ball Solution® |
| Table-top conveyor (usually high speed and multi-curved) | Ball or other rolling element; standard or solid-lubricated | **F (Lt. Gray) -** Stainless Ball Solution® |
| V-belt drive or unsupported overhung load | Ball or other rolling element; standard or solid-lubricated | **F (Lt. Gray) -** Stainless Ball Solution® |
| Fans, some pumps | Ball or other rolling element; standard or solid-lubricated (For plane bearings: contact Graphalloy at 914-968-8400 or sales@graphalloy.com) | **F (Lt. Gray) -** Stainless Ball Solution® |
| Trunnion | Ball or other rolling element; standard or solid-lubricated | **F (Lt. Gray) -** Stainless Ball Solution® |
| Reversing motion or frequent start/stop motion | Poly-Round® or Cylindrical Poly-Round® or Radial Poly-Round® | **B (Amber)** - Poly-Round® Solution® *or* **C (Dk Blue) -** Poly-Round® Bearings *or* **K (Dk. Gray) -** Unmounted Radial Bearings |
| High load + low speed combination | All-Round® or Poly-Round® or Cylindrical Poly-Round® (may require metal housing) | **D (Red) -** All-Round® Solution® *or* **B (Amber)** - Poly-Round Solution® |
| Low load + high speed combination | Ball or other rolling element; standard or solid-lubricated | **F (Lt. Gray) -** Stainless Ball Solution® |

# What are Plane Bearings?

All **Bearings** provide a sacrificial and disposable product between moving parts that are easier and less expensive to replace than more costly and less disposable components. (This is different than a **bushing** which is a device designed to fill an empty space and has no other particular function.)

Plane bearings are devices that have no “rolling” components. They are designed to maintain the centerline position of a shaft or establish a precise location of a structure. The name comes from the geometry “plane” that establishes the point of operation.

Plane bearings are divided into four classes based on the way each type works.

### Class I

A lubricated bearing whose source of lubricant must come from the outside. In order to be effective the lubricant must always be present; an absence of the lubricant will result in the journal contacting the bearing wall, and failure of the application.

Primary materials Brass, bronze, iron, babbitt, steel, polymer, wood, phenolic (micarta), elastomer, ceramic.

Principle of operation In a perfect design, the fluid film (lubricant) separates the journal from the bearing wall during normal operation, and eliminates wear.

### Class II

A lubricated bearing whose source of lubricant comes from within the bearing wall. In some cases the lubricant is added after the bearing is in its final physical form, and in others the lubricant is built into the matrix of the material during the manufacturing process. In either case, when the lubricant contained within the bearing wall has been exhausted, the journal will contact the bearing wall and will fail in the application.

Primary materials Sintered metals (primarily bronze), polymers (oil filled), ceramic, wood.

Principle of operation In a perfect design, the fluid film (lubricant) separates the journal from the bearing wall during normal operation, and eliminates wear.

### Class III

A bearing that requires no separate lubrication, and fails when the bearing wall has been exhausted or when the bearing material has broken down. Failure occurs when the journal centerline can no longer be sufficiently maintained for the application, or the load can no longer be sustained. The bearing must give up of itself in order to perform. (See chart below for list of primary materials.)

Principle of operation – A very thin film of material on the journal that is scraped from the inside of the bearing by the journal provides a suitable working interface between the journal and bearing wall.

### Class IV

Any other product that qualifies as a plane bearing by virtue of meeting all of the requirements of the plane bearing definition, but that do not fall into any of the first three classes by its operation.

## Class III Bearing Materials

| Base Materials | | Additives |
|---|---|---|
| ▪ Steel | ▪ Polyimide | ▪ PTFE |
| ▪ Resin (solid) | ▪ Urethane | ▪ Graphite |
| ▪ Polyethylene (low molecular weight) | ▪ PPS | ▪ Carbon |
| ▪ Filament wound resins | ▪ Wood | ▪ Molybdenum |
| ▪ UHMW (polyethylene, ultra-high molecular weight) | ▪ Peek | ▪ Silicone |
| ▪ Composition resins (wood, paper, cotton, canvas) | ▪ PEI | |
| ▪ Ceramic | ▪ Polyamide-imide | |
| | ▪ PES | |
| | ▪ PBI | |

# BEARING DESIGN CHECKLIST (BDC)

**Reference Project:** _____ **Date:** _____

**Distributor /Branch** **Contact**

**Customer** **Contact**

**City** **State**

**Phone** **Fax**

**Email**

## Application Data

**Do any of these conditions exist?**

- ☐ Modular Belt
- ☐ Tensioned Flat Belt
- ☐ Screw Auger
- ☐ Overhung Load
- ☐ Trunnion
- ☐ USDA/FDA Inspection
- ☐ Indirect Food Contact
- ☐ Direct Food Contact
- ☐ Wash Down
- ☐ Submersion
- ☐ Chemical
- ☐ Abrasive Material
- ☐ Vibration/Impact

**What type of drive is being used?**

- ☐ Roller Chain
- ☐ Direct Couple
- ☐ Timing Belt /HTD Belt
- ☐ V-Belt
- ☐ Line Shaft
- ☐ Hydraulic Motor
- ☐ Slave Drive
- ☐ Variable Frequency Drive
- ☐ Supported Shaft Mount Reducer
- ☐ Unsupported Shaft Mount Reducer
- ☐ Idler

**Bearing for:** ☐ New machine ☐ Retrofit

**How long is current bearing lasting?** (Estimated life)

Weeks: _____ Months: _____ Years: _____

**Is a drawing of current system available?** ☐ Yes ☐ No
**Existing problem is with:** ☐ Bearing ☐ Housing ☐ Both
**Suspected cause of failure:** _____

_____

**Will existing housing be re-used?** ☐ Yes ☐ No
**Has a plane bearing been tried previously?** ☐ Yes ☐ No

Material or brand: _____

**Describe the application:** _____

_____

_____

## Bearing Data

☐ Mounted ☐ Type "E" or Roller ☐ Thrust
☐ ER ☐ Unmounted/Radial ☐ Roll End

**Shaft Diameter:** _____

**Shaft RPM:** _____

**Estimated Load/Bearing:** _____

**Temp. around bearing:** _____
**Shaft direction:** ☐ Horizontal ☐ Vertical ☐ Inclined
**Type of motion:** ☐ Radial motion ☐ Linear motion
☐ Expansion ☐ Intermittent ☐ Reversing ☐ Frequent stop/start
**Self-alignment required?** ☐ Yes ☐ No
**Split housing required?** ☐ Yes ☐ No

**Part # of existing bearing:** _____

**Style of housing:** _____

**(If completing this checklist with bearing performance questions) Has anything about your operation or the enironment changed in the past few months:** _____

_____

_____

It is extremely helpful if you can provide information about the chemicals that the bearing is subjected to in operation or in cleaning. Please send MSDS if at all possible, or at least a list of the solutions that come in contact with the bearing(s). Email information to scottw@edtcorp.com with a note that your email accompanies the BDC you are submitting.

# PV Calculation Worksheet

PV (Pressure x Velocity) is a method of calculating bearing capacity by determining the amount of heat generated in a plane bearing. PV is the relationship of the load to the shaft speed.

(**F** _____ ÷ **A** _____ ) = **P** _____ x **V** _____ = **PV** _____

- **F**: Load on bearing
- **A**: Journal diameter x bearing LTB
- **P**: _____
- **V**: From chart below
- **PV**: Operational PV of bearing* (NTE PV limit of material from box below)

Calculate **P** (**P**ressure) by figuring F/A (force divided by area)

F = Load on the bearing
A = Journal size x length thru bore (LTB)

Use this chart to determine V (Velocity):

1. Find row that reflects speed
2. Find column that reflects journal size
3. The point where these two meet is V for this application

| Material Operating LImits | | | |
|---|---|---|---|
| Limiting | P | V | PV |
| PA | 800 | 50 | 1,000 |
| AA | 2,000 | 200 | 2,000 |
| NA | 2,000 | 350 | 6,000 |
| QB | 3,000 | 400 | 50,000 |
| QF | 6,000 | 400 | 60,000 |
| MA | 6,000 | 400 | 110,000 |

## Bearing / Journal Surface Speed Calculations (V = Surface Feet per Minute)

| Journal Speed in (RPM) | 1/2 | 3/4 | 1 | 1-1/4 | 1-1/2 | 2 | 2-1/2 | 3 | 3-1/2 | 4 |
|---|---|---|---|---|---|---|---|---|---|---|
| 1500 | 197 | 294 | 393 | 492 | 590 | 786 | 983 | 1179 | 1376 | 1572 |
| 1000 | 131 | 197 | 262 | 328 | 393 | 524 | 655 | 786 | 917 | 1048 |
| 900 | 118 | 177 | 236 | 295 | 354 | 472 | 590 | 708 | 826 | 944 |
| 800 | 105 | 157 | 210 | 262 | 315 | 420 | 524 | 628 | 734 | 838 |
| 700 | 92 | 138 | 184 | 230 | 276 | 368 | 459 | 551 | 642 | 734 |
| 600 | 79 | 118 | 158 | 197 | 236 | 316 | 393 | 472 | 551 | 629 |
| 550 | 73 | 108 | 145 | 180 | 217 | 288 | 361 | 432 | 505 | 577 |
| 500 | 66 | 98 | 131 | 164 | 197 | 262 | 328 | 393 | 459 | 524 |
| 450 | 59 | 88 | 118 | 148 | 177 | 236 | 295 | 354 | 413 | 468 |
| 400 | 53 | 79 | 105 | 131 | 158 | 210 | 262 | 315 | 367 | 420 |
| 350 | 46 | 69 | 92 | 115 | 138 | 184 | 230 | 276 | 321 | 369 |
| 300 | 40 | 59 | 79 | 98 | 118 | 158 | 197 | 236 | 276 | 315 |
| 250 | 33 | 49 | 66 | 82 | 99 | 132 | 164 | 197 | 230 | 262 |
| 200 | 27 | 39 | 53 | 66 | 79 | 106 | 131 | 158 | 184 | 210 |
| 175 | 23 | 35 | 46 | 58 | 69 | 92 | 115 | 138 | 161 | 184 |
| 150 | 20 | 30 | 40 | 49 | 59 | 80 | 99 | 118 | 138 | 158 |
| 100 | 14 | 20 | 27 | 33 | 40 | 53 | 66 | 80 | 92 | 105 |
| 75 | 10 | 15 | 20 | 25 | 30 | 40 | 50 | 60 | 69 | 79 |
| 50 | 7 | 10 | 14 | 16 | 20 | 26 | 33 | 40 | 46 | 53 |
| 25 | 4 | 5 | 7 | 8 | 10 | 13 | 17 | 20 | 23 | 26 |

**Journal Size (diameter in inches)**

Marginal - double check load (P) before selecting a plane bearing

Not recommended to use plane bearings

# ENGINEERING NOTES

## Installing Poly-Round® bearing into housing


Fig 8-1

**Step 1:** **Remove a Poly-Round® insert from an EDT housing, unscrew two (2) set-screws (Fig 8-1)**

Poly-Round® bearings are designed to fit snuggly in the housing. Note that "self-aligning" insert bearings typically do not actually "self-align" with only a thumb press; it is necessary to use a 'cheater-bar' through the bore to install, remove, or adjust alignment of most self-aligning inserts into most housings.

If using a housing by another manufacturer, choose Poly-Round® Plus insert.

**Step 2:** **Prepare to install EDT Poly-Round® bearing into housing**

Chilling the polymer shrinks it, making it easier to slip in and adjust the location within the sphere. As soon as the polymer returns to room temperature, it will fit as intended in the housing. For easiest installation, chill a new bearing by putting it into a freezer or in ice water for 30–60 minutes.


Fig 8-2

**Poly-Round® insert (with 2 slots on OD)**



A. Fig 8-2: Establish orientation of the drilled insert in the housing; align one of the anti-rotation slots with the tapped hole.
One of the anti-rotation slots should line up with the tapped hole.
NOTE: The second slot will be used when the insert has worn too far in one direction. At that time, the insert can be taken out of the housing and rotated 180º to utilize the unworn side of the insert.

**Poly-Round® Plus (with pin)**



A. Establish orientation of the [chilled] insert in the housing with the pin in one of the loading pockets (Fig 8-4).


Fig 8-4

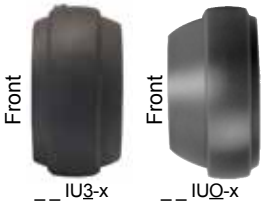

Fig 8-3

B. To maintain the same length through bore of the assembly, be aware of the direction of the longer side of the insert when you drop the Poly-Round® Plus into the housing. Poly-Round® inserts ( _ _ IUO-x) are usually assembled with the long end towards the front of the housing; inserts (_ _IU3-x) are assembled with the short end to the front (Fig 8-3).

C. Roll the [chilled] bearing into the housing. A 'cheater-bar' is a good assist. (The diameter of the bar should be as close to the bearing bore as possible; a wood or plastic bar is preferable because it will cause less damage to the components.)

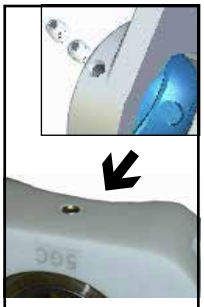
Fig 8-5

D. When the slot is in place under the tapped hole and the insert appears to be aligned in the housing, the set-screw can be installed (Fig 8-5). The first set-screw (the longest one) should make contact with the bottom of the slot in the bearing, then reverse it one (1) full turn. This anti-rotation pin within the slot allows the insert to pivot a few degrees in multiple directions without locking the insert in place. The second setscrew will go on top of the first to lock the first set-screw in place and fill the hole (sanitation).

D. Install ¼-28 set-screw into threaded hole until flush with surface (sanitation).


See: EDT Poly-Round® Installation video: http://www.youtube.com/watch?v=N8mXjrZbwYA

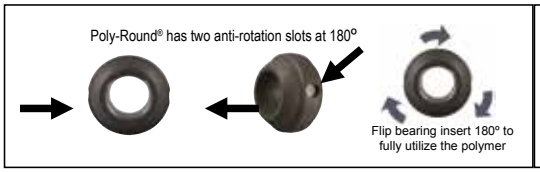



When insert wears too far in one direction, rotate insert 180° to use the unworn portion

*(Continued on next page)*



Fig 9-1

If using a housing by another manufacturer, choose Poly-Round® Plus

## Install the mounted bearing onto the equipment

### Step 3: Shaft tolerences

The shaft and bearing tolerances are important to get maximum performance with a plane bearing. Turned and ground shafting should be considered.

| RECOMMENDED SHAFT TOLERANCES RUNNING PLANE BEARINGS | | | | |
|---|---|---|---|---|
| Shaft sizes | ½" to 1-1/8" 12 – 29 mm | 1-3/16" to 1-15/16" 30 – 50 mm | 2" to 3-1/8" 51 – 80 mm | 3-1/4" to 4-1/2" 81 – 120 mm |
| DoubleLock® Sleeve | + .0005 / -.002 | + .001 / -.002 | + .001 / -.002 | + .001 / -.002 |
| Set-screw sleeve | +.001 / -.002 | +.002 / -.002 | +.003 / -.003 | +.003 / -.003 |

### Step 4: Installing bearing onto equipment

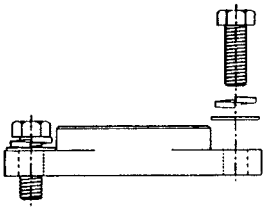

Fig 13-1

- All housings (polymer or stainless) should be installed with a flat washer under the head of the bolt.
- Use of a lockwasher is at the discretion of the installer; if used, lockwasher should be mounted above the flat washer (Fig 13-1).
- Tighten bolts no more than 25-30 foot-pounds / 300 inch-pounds of torque, no matter what material the housing is (polymer, stainless steel, standard cast metal).

### Step 5: Mount bearing insert onto shaft

- When mounting bearing insert onto shaft the torque pressure for inner race set-screws should not exceed:

| TIGHTENING TORQUE LIMITS OF SCREWS | | | | |
|---|---|---|---|---|
|  | KleanCap® screws on DoubleLock® sleeves | 203-208 ring A-F<br>1/2" - 1 1/2" shaft<br>1/4-28 UNF<br>**110 inch-pounds** | 209-212 ring G-J<br>1 5/8" - 2 7/16" shaft<br>5/16-24 UNF<br>**200 inch-pounds** | 214-218 ring L-O<br>2 1/2" - 3 1/2" shaft<br>3/8-24 UNF<br>**350 inch-pounds** |
|  | Stainless set-screws on locking sleeves | 203-205 ring A-C<br>1/2" - 1" shaft<br>1/4-28 UNF<br>**29 inch-pounds** | 206-212 ring D-J<br>1 1/8" - 2 7/16" shaft<br>3/8-24 UNF<br>**60 inch-pounds** | 214-218 ring L-O<br>2 1/2" - 3 1/2" shaft<br>1/2-20 UNF<br>**110 inch-pounds** |

- Use of threadlocker will assure set-screw integrity.

### Step 6: Run equipment

- Bearings must be checked after startup to make sure that they are not running hot. If the bearings are running hot, check step 5 again, and look for alignment problems. A Troubleshooting Guide is on page O-27 of the User Handbook (EDT catalog, Section O, or online at www.edtcorp.com).
- If there is still a problem after reviewing the installation, call the factory in Vancouver, WA (Ph: 360-574-7294) or email at **sales@edtcorp.com**.

Installation posters can be seen/ordered online at:

*http://www.edtcorp.com/html_pages/productsheets.html*




Poly-Round®




Poly-Round® Plus



## Replacing flange bearings into All-Round® spherical inserts

The sacrificial part of an All-Round® is the flanged polymer bearing (Fig 10-1).

- All-Round® flange bearing sleeves should be changed after the wear has reduced the wall thickness to no more than 3/4 of the original wall thickness, or when the shaft centerline becomes a problem.
- To replace an All-Round® flange polymer bearing, do NOT adjust the setscrews or otherwise tamper with the spherical insert in the housing – these two components should remain AS IS.



Fig 10-1



Fig 10-2

**Step 1:** Press used flange polymer bearing out of stainless ring (see Fig 10-2). This can be done with an EDT installation and removal tool and any arbor press or drill press. The spherical insert must be positioned on a pipe or some fixture that raises the spherical ring high enough off the bench to remove the bearing. See Fig 10-3A and 10-3B for fixtures that can be purchased from EDT for this operation.

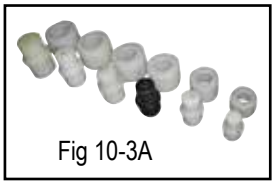

Fig 10-3A



Fig 10-4

**Step 2:** Install new EDT flange polymer bearing. When installing replacement All-Round® bearings, note that the flange polymer sleeves are somewhat brittle so they must be gently pressed into the All-Round® spherical inserts. Care should be taken that the flange bearing is perpendicular to the bore of the stainless ring before pressure is applied. Pressure should be applied smoothly and consistently. A drill press or arbor press is ideal for this (see Fig 10-4).

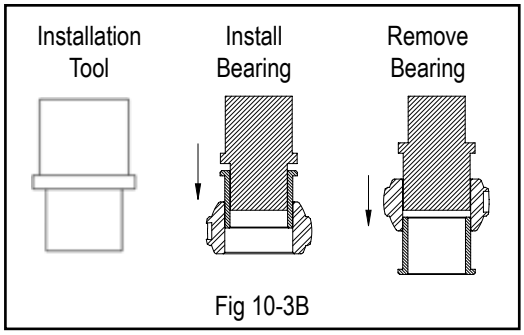


Fig 10-3B

All-Round® bearings can be installed with the polymer flange on either side of the spherical insert (see Fig 10-5A). Locking sleeve must run against polymer and not against a metal surface (see Fig 105B). Units are shipped from the factory as shown in “View A” configuration (see Fig 10-5B); you can specify “View B” assembly to reduce the length thru bore beyond the housing.

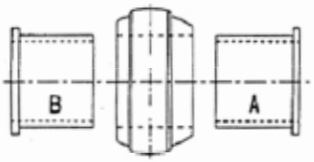


Fig 10-5A

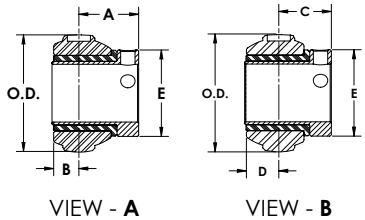


VIEW - **A** VIEW - **B**

Fig 10-5B

For Special Application Conditions ..... See pages O-22 thru )-25
To install housing onto equipment..... See page O-8

*To install All-Round® bearing into housing, see next page*



## Installing spherical insert into housing

Follow these instructions to install an All-Round® insert into a housing that previously held a different kind of bearing. Once installed there is no need, in most cases, to change out the spherical insert unless the polymer bearing wears through to the stainless insert.


Fig 11-1

**Step 1:** To remove the used stainless spherical insert from an EDT housing, unscrew TWO setscrews from the outside of the housing. For housings by other manufacturers, remove any fittings (grease-fitting or tap plug) and remove bearing insert (see Fig 11-1).

Check the I.D. of the housing (especially on a metal housing) for any burrs, scratches, or an obvious out-of-round condition. Repair burrs and scratches as required. An out-of-round condition makes the housing unusable. Refer to page U-23 for a fast and easy way to check housings without expensive tools.

**Step 2:** Note that the spherical insert is not symmetrical; direction of assembly significantly affects the overall length thru-bore. Also note the slot on the O.D. of the bearing (see Fig 11-2). The slot must be positioned so that it will fall under the threaded hole on the housing.

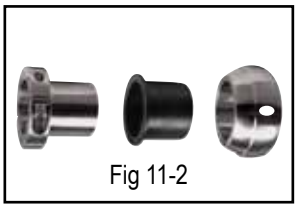
Fig 11-2

With all polymer bearing materials EXCEPT “QF” material, the spherical insert with the polymer bearing can be pressed together, and the two pieces can then be handled as one unit. QF flange polymer bearings should be pressed into the spherical insert AFTER the insert is set-screwed in place into the housing. Refer to Step 2 on page O-10 for flange bearing installation procedure.

Roll the bearing into the housing using a round bar that is as close to the bore dimension as possible. This will prevent damage to the bore of the flange polymer liner. If the “cheater bar” is smaller ID than the shaft, it may be helpful to wrap the round bar to avoid excess load on only one small part of the bearing (see Fig 11-3). Wood or polymer bars help reduce bearing damage.


Fig 11-3

**Step 3:** Install two setscrews through the housing. The 1st setscrew (long) will make contact with the bottom of the slot in the bearing and then needs to be reversed 1 FULL turn. The 2nd setscrew (short) goes on top of the 1st to lock the first in place and to fill the hole (see Fig 11-4).

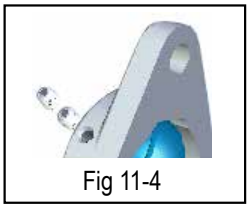
Fig 11-4

## Installing ball bearing into housing

**Revised 3/24/2014**

*If you have purchased a ball bearing that is already assembled into the housing, skip ahead to step 4 on page O-13.*

### Step 1: Inspect the I.D. of the housing for any burrs, scratches, or an obvious out-of-round condition



Fig 12-1

a) Check the mating parts prior to full installation by performing the following procedure:

- Install the bearing into the installation slots in the spherical housing.
- Hold the bearing between your fingers and turn the bearing in the housing like a key in a lock (Fig 12-1). A bearing that fits properly will turn 360° in the housing This may require two hands, but if a tool is required to turn the bearing in the housing, the fit is too tight.

b) Repair burrs and scratches as required. An out-of-round condition makes the housing unusable.

### Step 2: Select best lubrication option for your facility, and add hardware to housing



Fig 12-2a

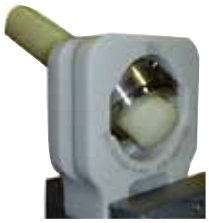

Fig 12-2b

- EDT provides a choice of housing hardware: a ¼-28 set-screw AND a ¼-28 grease fitting.
- Install the appropriate hardware: either a set-screw to plug hole, or a grease fitting to re-lube into the housing depending on how you choose to maintain your ball bearings (with regular re-greasing or sealed-for-life).

  **NOTE:** Solid lubricant eliminates issues related to over-greasing; bearings will run more cleanly and eliminates the labor and materials of regreasing. However, in a highly corrosive chemical environment, lubricants may prematurely degrade and not fully protect the races from chemicals. Even with a solid lubricant, an occasional shot of grease can prolong bearing life.

### Step 3: Insert ball bearing into housing

- If there is an anti-rotation pin on the O.D. of the bearing, the pin must be positioned to slip into the loading slot of the housing (Fig 12-2a).
- Use a round bar sized as close to the bore dimension as possible to roll the bearing into the housing (Fig 12-2b).
- Uncommon shaft sizes are accommodated by EDT with a stainless bushing (Fig 12-3) that slides between the inner race and the shaft. A long set-screw retains it in place. In many cases, bushings can be reused through several bearing changes. Do not tighten more than the listed pressure limits (refer to Step 6); over-tightening set-screws may cause the inner ring to crack.*

  *An alternative to set-screw locking is eccentric locking ball bearings. Eccentric style is a more positive locking system than set-screws. Eccentric bearings are not for reversing installations.



Fig 12-3

Fig 12-4



| HOUSING HARDWARE | | |
|---|---|---|
| | EDT Housings | Other brand housings |
| Re-lubricatable ball bearing | • To regrease: install ¼-28 grease fitting into threaded hole<br>• To maintain sealed-for-life: install ¼-28 set-screw into threaded hole until flush with surface (Fig 12-4) | • Check that grease hole of insert will align with grease ring of housing. Housing requires a grease fitting to accommodate a grease gun. |
| Solid lubricated ball bearing | • To rely on solid lubricant only: install ¼-28 set-screw into threaded hole until flush with surface (Fig 12-4) | • Remove grease fitting and replace with set-screw or pipe plug. This bearing typically does not need grease.** |

**As cleaning chemicals in the plants become more corrosive, solid lubricants do not always protect the races from the chemicals. An occasional shot of grease in a solid lube bearing generally corrects this problem.

*(Continues on next page...)*

## Installing ball bearing unit onto equipment

**Revised 3/24/2014**

**Step 4:** To get the maximum performance with a ball bearing, the shaft size and the bearing I.D. size must be closely matched. Turned and ground shafting should be considered.

| RECOMMENDED SHAFT TOLERANCES RUNNING BALL BEARINGS | | | | | | | |
|---|---|---|---|---|---|---|---|
| Shaft sizes: ½" to 1-1/8" 12 – 29 mm | | Shaft sizes: 1-3/16" to 1-15/16" 30 – 50 mm | | Shaft sizes: 2" to 3-1/8" 51 – 80 mm | | Shaft sizes: 3-1/4" to 4-1/2" 81 – 120 mm | |
| Max | +0 inch | Max | +0 inch | Max | +0 inch | Max | +0 inch |
| Min | -.0006 in/ -.015mm | Min | -.0006 in/ -.015mm | Min | -.0007 in/ -.017mm | Min | -.0009 in/ -.023mm |

**Step 5:** **When mounting housing onto equipment**

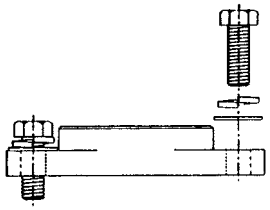

Fig 13-1

- All housings (polymer or stainless) should be installed with a flat washer under the head of the bolt.
- Use of a lockwasher is at the discretion of the installer; if used, lockwasher should be mounted above the flat washer (see Fig 13-1).
- Tighten bolts no more than 300 inch-pounds (25-30 foot-pounds) of torque, no matter what material the housing (polymer, stainless steel, cast metal)

**Step 6:** When mounting bearing insert onto shaft, torque pressure for inner race set-screws should not exceed these limits:

| TIGHTENING TORQUE LIMITS OF STAINLESS SET-SCREWS | | | |
|---|---|---|---|
| On set-screw locking bearings* | | | |
| 203-206 ring A-D | 207-209 ring E-G | 210-212 ring H-J | 214-215 ring L-M |
| 29 inch-pounds | 60 inch-pounds | 110 inch-pounds | ~170 inch-pounds |
| *An alternative to set-screw locking is eccentric locking ball bearings. Eccentric style is a more positive locking system than set-screws. Eccentric bearings are not for reversing installations. | | | |
| On eccentric locking bearings | | | |
| 203-205 ring A-C | 206-210 ring D-H | 211-215 ring I-L | 216-220 ring M-P |
| 35 inch-pounds | 74 inch-pounds | ~155 inch-pounds | ~245 inch-pounds |

Use of threadlocker will assure set-screw integrity.



Fig 13-2

**Step 7:** **Run equipment**

- Bearings must be checked after startup to make sure that they are not running hot (Fig 13-2). If the bearings are running hot, check step 5 again, and look for alignment problems. A Troubleshooting Guide is on page O-27 of the User Handbook section of EDT catalog, or online at www.edtcorp.com).
- If there is still a problem after reviewing the installation, call the factory in Vancouver, WA (Ph: 360-574-7294) or email at **sales@edtcorp.com**.

### RED FLAG ALERT!




Stainless ball bearings can RUST since the balls and races are made of 400-series (hardenable) stainless steel. High concentrations of cleaning solutions, as well as other strong chemicals, will speed the corrosion process.

OPTION: Check with EDT for assistance to see if a Poly-Round® or other plane bearing `might be an option for your application.


Fig 14-1

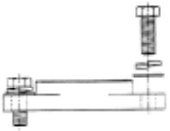
Fig 14-2


Fig 14-3


Fig 14-4

## Installing Poly-Round® mounted bearings onto equipment

**Note:** There are TWO setscrews through the outside of the EDT housing. These are pre-set at the factory and do not require adjustment in the field (see Fig 14-1).

**Step 1:** Mount bearing and housing assembly onto machine.

- **Always use a flat washer** under the hex head of the bolt.
- Use of a lockwasher is at discretion of the installer; lockwasher would be placed **above** the flat washer (see Fig 14-2).

Tighten bolts no more than 300 inch-pounds (25-30 foot-pounds) of torque, no matter what material the housing (polymer, stainless steel, standard cast metal).

**Step 2:** A. Threadlocker is recommended on all threads.
(Do this at time of installation, so threadlocker is fluid when tightening onto shaft.)

1. Setscrews: On setscrews, back out the setscrew, put drop of threadlocker in the tapped hole, and reinstall.
2. Bolts: back out the screw about half-way (5 turns), put drop of threadlocker at the neck of the thread so as screw is re-tightened, threadlocker is worked into the threads.

B. Locking sleeve must run on polymer (with a slight gap at flange*), not run against metal.

1. On Poly-Round® units, locking sleeve may thrust against either side of the insert since it is entirely polymer.
2. On All-Round® units, locking sleeve must thrust against polymer flange of the plastic bearing.

C. Tighten set screws or cap screws so sleeve is secured on shaft.

* Leave a .005 gap (paper thickness) between the SS flange of the locking sleeve and the side of the bearing (see Fig 14-4).

| TIGHTENING TORQUE LIMITS OF STAINLESS SET-SCREWS | | | |
|---|---|---|---|
| On setscrew locking bearings | | | |
| 204-206 ring size: 29 inch-pounds | 207-209 ring size: 60 inch-pounds | 210-212 ring size: 110 inch-pounds | 213-215 ring size: ~170 inch-pounds |
| On eccentric locking ball bearings | | | |
| 1/4-28 UNF: 35 inch-pounds | 5/16-24 UNF: 74 inch-pounds | 3/8-24 UNF: ~155 inch-pounds | 1/2-20 UNF: ~245 inch-pounds |

**Step 3:** Once the bearings are mounted, and before drives and belts (or other devices) are installed, make sure the shaft freewheels inside the bearings.

- If the shaft does not freewheel, the bearing must be adjusted inside the housing to better align with the shaft.
- If necessary, use a 'cheater bar' in the bearing bore to assist: the diameter of the bar should be as close to the bearing bore as possible; a wood or plastic bar is preferable because it will cause less damage (see Fig 14-6).
- Once shaft freewheels correctly, attach drive mechanisms and belts.
- When bearings are fully installed, check again for freewheeling. If equipment does NOT freewheel as it did before tightening bolts, back them off, adjust alignment or housing placement as needed for operation without excess 'drag.'

**Step 4:** Run equipment.

- EDT Poly-Round® bearings will run warmer than ball bearings, but they should never run so warm that you cannot hold your hand on the bearing.
- If an EDT bearing is warmer than your hand can tolerate, refer to Step 3 to adjust the alignment of the bearing and assure that the shaft freewheels.
- If bearing continues to run hotter than you are able to touch, refer to the Troubleshooting Guide on page O-28.
- For troubleshooting or other assistance, contact EDT factory by phone: 800-810-7110 or email: edtsales@edtcorp.com.


Fig 15-1

## Cylindrical profile bearings

**Radial Poly-Rounds® (Fig 15-1) are excellent in applications with:**

- Low to moderate shaft speed
- High temperature (up to 500°F)
- Low temperature to cryogenic
- Submerged, chemical, brine, wash-down


Fig 15-2

**Re-grease-able stainless ball bearings (Fig 15-2) are excellent in applications with:**

- High speed
- High tension
- Corrosive atmosphere
- Environments where lubrication is not a problem


Fig 15-3

**Solid lubricated stainless ball bearings (Fig 15-3) are excellent in applications with:**

- High speed
- High tension
- Difficult to maintain locations
- Corrosive atmospheres
- Extremes of temperature (high to 650°F, low to -250°F, vacuum) – specify requirement when ordering


Fig 15-4

**All-Round® Supreme ER bearings (Fig 15-4) are excellent in applications with:**

- High load
- Moderate speeds
- Frequent start/stop
- Submersion, chemical, brine, washdown
- Low temperature, to cryogenic
- High temperature, to 500°F (sustained, not intermittent)

Most unmounted bearings have no means of self-alignment, so it is critical that the shaft and the equipment are straight and square.

## Installing onto equipment

**Step 1:** Inspect location where the bearing will be installed. Check for burrs, scratches, rust, etc. that may adversely affect the installation of the bearing. If there are imperfections, repair the location prior to installing the bearing. Tube and pipe rollers also must be straight, as well as the shafting that supports them, or they will "thump" with every revolution.

**Step 2:** Install bearing.

OD-press bearings should be installed with an arbor or some means of pressing the bearing squarely into the housing while pressing on the circumference of the outer race.

ID-press bearings must be installed evenly onto the shaft while pressing on the inner hub or ID of the bearing.

**Step 3:** Radial Poly-Round® and solid lubricated ball bearings are designed not to be regreased for the life of the bearing.

## Installing EDT bearings in high temperature locations

Heated locations like dryers, ovens and fryers are very common in many industries as food is cooked, bulk chemicals dried, fiber glass baked, and heat-treated metal parts quenched, etc. In high temperature applications, the expansion of different materials relative to each other causes design difficulties and must be addressed in the bearings that allow these heated devices to move.

Materials expand with increasing levels of temperature and things that are fixed at both ends of an expanding material will break. It is for this reason that expansion bearings came about. EDT's plane bearings work very well in high temperature conditions with a fixed bearing on the drive side of a device and an expanding bearing on the opposite side (see Fig 16-1).

### Bearing installation in high temperature locations

The fixed bearing should be an EDT Poly-Round® out of a high temperature material in a metal housing with a locking sleeve flange on one side of the bearing and a split set collar on the opposite side of the same bearing. This allows control of the lateral movement of the shaft to be contained by just the one bearing. The opposite expansion bearing should be a Poly-Round® out of high temperature material in a metal housing with locking sleeve that has an extended length body. The locking sleeve fixed to the shaft now has a longer journal to accommodate the float of the shaft as the temperature increases and decreases. The flange of the locking sleeve of the expansion bearing must be on the outboard side of the oven (see diagram). (Call EDT if space limitations require inside mount.)

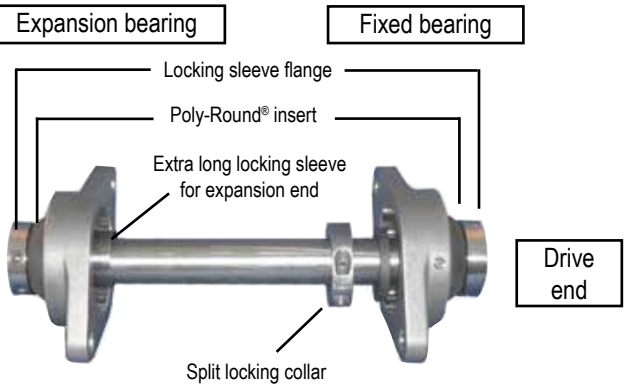

Fig 16-1

With few exceptions, lubricants of all kinds should not be applied in hot applications.

### Food grade high temp materials

Fryer bearings associated with food processing must, in most cases, be approved as a "food ingredient." EDT's FA bearing material makes the grade for temperature (operates to 500ºF), for USDA/FDA criteria and for ease-of-maintenance. As with all other high-temperature applications, this must be in a Poly-Round® style (see Fig 16-2).


Fig 16-2

### High speed or tension locations

High temperature locations with high speed or tension (flat belt take-ups, pumps, fans operating above 300ºF ambient temperature) will be well served with high temperature, solid lubricated ball bearings. Operating temperature must be specified, and stainless, standard or "special material" bearings are all available options.

### Threads

Since continuous expansion and contraction of metals will cause threaded products to vibrate loose, it is necessary to use an appropriate threadlocker on all setscrews.

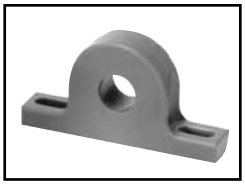

## Installing block bearing onto equipment

**Step 1:** Mount block bearing onto machine. Slide locking sleeve into bearing bore. Locking sleeve may be placed against either side of the bearing since the entire block is bearing-grade material (see Fig 17-1). Leave a .005 gap (paper thickness) between the stainless flange of the locking sleeve and the side of the bearing. Apply threadlocker when tightening the setscrews or bolts to insure that the locking sleeve will remain SECURELY in place.



Fig 17-1

**Step 2:** After the bearings are mounted, and before drives and belts (or other devices) are installed, make sure that the shaft freewheels inside the bearings. If not, the bearing must be shimmed to better align with the shaft. Block bearings have the disadvantage of not being able to adjust internally like a self-aligning bearing, so must be adjusted externally. Attach drive mechanisms and belts only after shaft freewheeling is confirmed.

**Step 3:** Run equipment. EDT block bearings will run warmer than ball bearings but should never run so warm that you cannot hold your hand on the bearing. If it runs warmer than your hand can tolerate, and Step 2 in the assembly has been accomplished, call the factory and we will help you with troubleshooting. Also, a Troubleshooting Guide is on page O-27 of this manual.



## Assembling and installing take-up frame onto equipment

EDT stainless steel take-up frames (Fig 16-1) are designed to bolt or weld directly onto a machine frame. Both narrow and wide slot designs are available which accept all industry standard housings. EDT stainless take-up units are made from a heavy gage of folded stainless sheet metal and will accommodate most loads. Applications with extreme side loading may require a heavier unit. A load large enough to damage a frame will also bend the shaft.



### Wide slot installation

The tensioning screw with wide slot housings can be installed either before or after the housing is installed on the rail. The end of the tension screw will reside in the open hole at one end of the housing and extend into the adjustment nut slot. There will be one stainless nut in that slot and another on the tensioning screw outside the housing that will tighten up against the flat end of the housing. The pair of these nuts will keep the screw from moving out of position during operation. All of the stainless hardware is included with the take-up frame when shipped (see Fig 18-2).

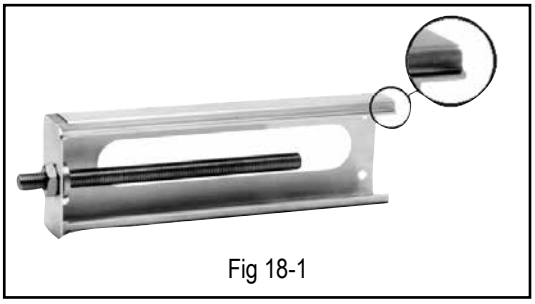

Fig 18-1

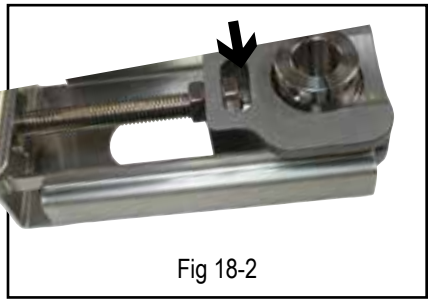

Fig 18-2



### Narrow slot installation

The tensioning screw with all narrow slot housings utilizes a split pin to attach the housing. Any split pin installation after the housing is installed in the take-up frame is inviting a failure of the slot and is not recommended. The tensioning screw should first be installed in the housing while the housing can be fully supported behind the pin. This is best accomplished with a small arbor press or a drill press (see Figs 18-3 through 18-6).



Fig 18-3

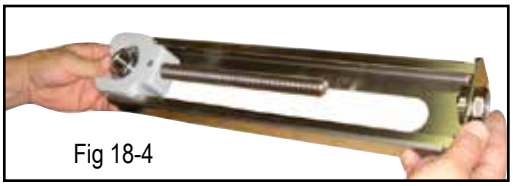

Fig 18-4

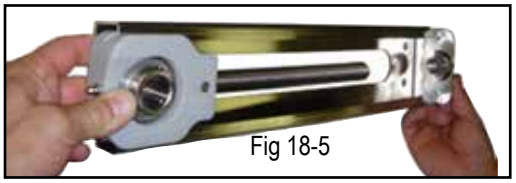

Fig 18-5

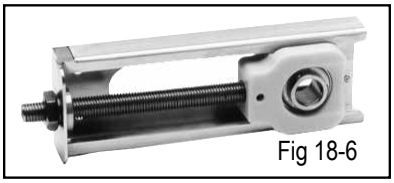

Fig 18-6

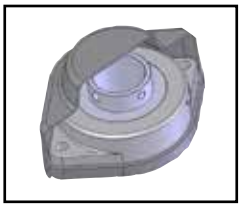



Fig 19-1

## Assembling and installing Bearing Glove® onto equipment

The Bearing Glove® surrounds a 2-bolt bearing (typically a ball bearing) with 360° of protection from solid contaminants including:

- Abrasives
- Bulk solids
- Powders

The EDT Bearing Glove® is designed to be a self-sufficient installation. The Glove® completely encases the bearing to provide a contaminant-free area of operation around the shaft and bearing. Figure 19-1 shows the three piece assembly of:

- Cover
- Any brand of 2-bolt flange bearing
- Base with seal

The Glove® cover has a built-in tab that snaps over a notch in the base. However, in some applications the tab may not keep the pieces together as securely as required. Some additional assembly options are shown below. Choose the one that best fits your specific application.



Fig 19-2

### Assembly option #1

**Step 1:** Bolt bearing and Glove® base to machine frame. Note slot direction on base (see Fig 19-2).

**Step 2:** Snap Glove® cover over bearing assembly (see Fig 19-2).

**Step 3:** Some Glove® sizes use push-in fasteners that are supplied.

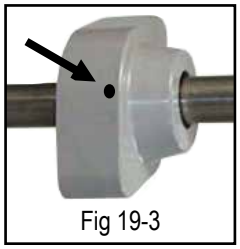

Fig 19-3

### Assembly option #2

**Step 1:** Assemble Glove® and bearing as in Option 1.

**Step 2:** Drill a small hole through the wall of the Glove® cover and into the edge of the base (see Fig 19-3).

**Step 3:** Install self-tapping screw to secure. Use as many screws as you feel are required for your application.

The Glove® is not intended for on/off bearing coverage. Installations that require frequent access to the insert should consider bearing caps.

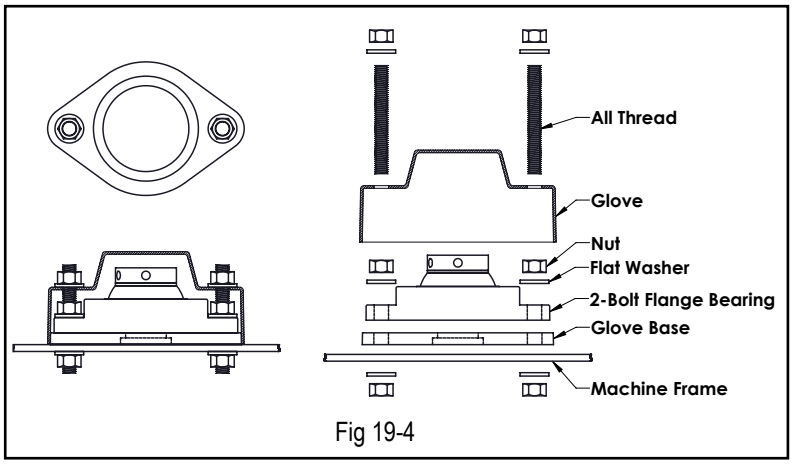


Fig 19-4

| | Qty | C Glove® (205 ring) | F Glove® (208 ring) | H Glove® (210 ring) |
|---|---|---|---|---|
| ss all-thread | 2 ea | 7/16" x 2-1/4" long | 1/2" X 3" long | 1/2" x 3-1/2" long |
| Drill holes | | 15/32" | 17/32" | 17/32" |
| ss hex nuts | 6 ea | 7/16" | 1/2" | 1/2" |
| ss flat washer | 6 ea | 7/16" | 1/2" | 1/2" |
| Option if packing with grease to keep out liquid contaminants | | ▪ Add 4 each rubber flat washers.<br>▪ Drill cover to accept grease fitting. (Take the fitting off the 2-bolt bearing and screw it into the cover.) | | |

## Installing *Glove® 2* with Poly-Round® bearing or ball bearing



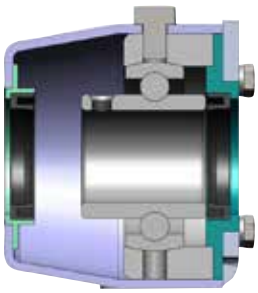

Cross section of thru-bore Glove®2 showing
Cover with seal, setscrew lock ball bearing in
Bearing Housing with Seal Ring and seal in Mounting Bracket



Cover | Bearing housing | Seal Ring | Mounting bracket

Marking on The Glove®2 that you have received indicates the product you have ordered:

| EDT | 72 | 23 | G | B | N | - | ZY | S |
|---|---|---|---|---|---|---|---|---|
| | Housing size (in mm) | ID size (in 16th inch) | Mounting bracket<br>G = Pillow block<br>2 = 2-Bolt<br>3 = 3-Bolt<br>4 = 4-Bolt | Cover style<br>B = Blind<br>T = Thru | Seal<br>N = Nitril seal<br>V = Viton seal | | Bearing insert*<br>Ball: Z = Stainless<br>Y = Food grade grease<br>J = food grade solid lubricant<br>Poly-Round® style: Use 2 letter polymer material identifier | Lock device<br>L = DoubleLock®<br>S = Setscrew lock<br>E = Eccentric lock |

***A ball bearing is recommended in The Glove®2** and The Glove® because ball bearing more tightly maintains the centerline which is critical to maintain integrity of the seal.*

**Step 1** *(Ball bearing Insert* and *Poly-Round® Insert)*

- The Glove®2 assembly that you have received consists of:
  The Bearing insert in the Bearing Housing bolted to the Mounting Bracket with Seal Ring and seal attached.
  The Cover and hardware to assemble Glove® Cover is included but unassembled
- If there is a locking sleeve or eccentric collar, remove this from the assembly.
- Slide the bearing over the shaft. Move assembly into location on the equipment.
- Bolt Mounting Bracket onto equipment – use a flat washer under the head of the mounting bolts.
  - — Do not tighten down the bolts until all of the Glove® assemblies and bearings are in place.
  - — Use of a lock washer is at the discretion of the installer. Lock washer should be installed **above** the flat washer.

*(Continues on next page...)*

**Step 2**

*Ball Bearing Insert*

- For setscrew lock: Back out the setscrew and put a drop of thread-locker on the setscrew.
- For eccentric lock: Back out the setscrew and put a drop of thread-locker on the screw as you screw it tight against the shaft. Use an allen wrench in the setscrew to turn the collar until it seats onto the inner ring of the ball bearing; tighten setscrew against the shaft.

*Poly-Round® Insert*

- Slide locking sleeve over the shaft and into the bearing.
- Position sleeve flange against one side of the polymer bearing. (Metal of sleeve should NOT contact another metal part.)
- Locate the sleeve flange with .005" gap (thickness of a business card) between the sleeve flange and the polymer side of the bearing.
- Back out the setscrew and put a drop of thread-locker on the setscrew as you screw it tight against the shaft.

**Step 3** *(Ball bearing Insert* and *Poly-Round® Insert)*

- After the Glove®2s are all mounted, before the drives, belts, or other devices are connected – **and before the covers are installed** – make sure the shaft free-wheels inside the bearings.
- If shaft does NOT free-wheel, adjust the bearing insert inside the housing or shift the Mounting Brackets as needed to better align with the shaft.
- When shaft free-wheels, tighten the mounting bolts of the Mounting Bracket. Bolt pressure should not exceed 25 to 30 foot/pounds of torque.
- After Mounting Brackets are tightened into place – and before adding the Covers – again verify that shaft free-wheels before adding covers. (If not, loosen bolts and adjust locations as needed.)

**Step 4** *(Ball bearing Insert* and *Poly-Round® Insert)*

- Slip Glove®2 Cover over the Bearing Housing. Align hole(s). Install with hardware provided.

**Step 5** *(Ball bearing Insert* and *Poly-Round® Insert)*

- Bearing inserts (ball bearings or Poly-Round® or All-Round®) should never be so loose in the Bearing Housing that they are actually free-"self-aligning." Proper bearing fit requires leverage of the shaft to align. Misalignment causes DRAG on the system which generates excess heat that will prematurely fail the bearing inserts.
- Run equipment.

*Ball Bearing Insert*

- If ball bearing insert runs warmer than your hand can tolerate, check shaft alignment (per Step 3.)

*Poly-Round® Insert*

- EDT Poly-Round® bearings will run warmer than ball bearings but should never run so warm that you cannot hold your hand onto the bearing. If it runs warmer than your hand can tolerate, check shaft alignment (per Step 3).

**To replace worn bearing** *(Ball bearing Insert* and *Poly-Round® Insert)*

- Back out the bolt(s) that secure the The Glove®2 cover.
- Remove the Mounting Bracket from the equipment (may not be necessary with pillow blocks).
- Remove the Bearing Housing from the Mounting Bracket.

*Ball Bearing Insert*

- Roll the bearing out of the bearing housing.
- Roll new ball bearing insert into the Bearing Housing.

*Poly-Round® Insert*

- Roll the bearing out of the bearing housing.
- Over time, the Poly-Round® insert will wear in the direction of the load. When the centerline is no longer workable, or when the seal will no longer function, replace the Poly-Round® insert.
- Roll Poly-Round® into bearing housing.
- Poly-Round® should be installed with the slot aligned with one of the tapped holes in the Bearing Housing.



*(Ball bearing Insert* and *Poly-Round® Insert)*

- Straighten the insert in the Bearing Housing to a position that appears to be aligned.
- Screw the bearing housing onto the Mounting Bracket
- Replace the seal as required.
- Follow Steps 2 and 3 to assure the shaft is freewheeling before you tighten The Glove®2 assembly to the equipment.
- Reattach the Glove®2 (step 4).

# Special Application Conditions

Many bearing applications fall out of “the norm” and often there is no choice except to change the product or break the generally accepted rules of design to accommodate these difficult conditions. Here are some difficult conditions in which EDT bearings have been called upon, and suggestions to extend bearing life as long as possible. These recommendations are based on the premise that “ambient temperature” is 70°F.

## Abrasion

All moving parts (bearings, by their nature, allow parts to move) are affected by solid abrasives. It is impossible to predict the longevity of any specific product, including an EDT bearing, in a solid abrasive environment because there are so many unknown factors involved. Take, for example, salt. It is both hard and soft, smooth and rough-edged, and different colors. Typically, bearing seals are called upon to combat abrasives, but even the best bearing seals are a compromise because bearings need to allow parts to move against each other and in so doing, the seal is not tight. The best option for extending bearing life in abrasives is to cover up the bearing.

For this, EDT developed the Bearing Glove® (see Fig 22-1) that completely encapsulates the bearing and housing with a sealed plate on the bottom and a sealed cover on the top. This device is very effective, and is even more effective if it is filled with grease. The stationary grease captured by the Glove® cover is nearly 100% effective. Any bearing mounted inside the Glove® does not require lubrication for the life of the product. Like all EDT products, the Glove® is designed to accommodate all other industry standard designs.



Fig 22-1

The Glove® is designed to mate with 2-bolt flange housings. Since the diagonal distance across the bolt holes of a 4-bolt flange are the same as a 2-bolt flange, a 2-bolt Glove® can be used to retrofit 4-bolt locations. An optional stainless angle allows 2-bolt flange housings to be mounted upright, like pillow blocks, so the 2-bolt Glove® can also retrofit for pillow blocks (see Fig 22-2). With the Glove®, three styles of bearings can accommodate complete exclusion of solid contaminants.



Fig 22-2

## Cold

Cold operations generally fall into the two categories of below -40° or above -40°. If ammonia refrigerant is used, the application will never be below -40°. (Note that -40°F and -40°C are the same temperature.)

All of EDT’s standard catalog bearings can be used in freezers down to -40°. There are no material restrictions or bore changes required at this low temperature, but the Poly-Round® style of bearing is generally better than the All-Round® bearing unless there are other unique application considerations.

For applications below -40°, it is important to inform EDT of the temperature requirement at time of order because changes in dimensions and materials may be necessary.

- No polymer bearing housings, including EDT’s “KG” material housing, should ever be used below -40°.
- No ALL-ROUND® style bearings should ever be used below -40°.
- Use only steel or stainless steel housings.
- Use only Poly-Round® bearings with “Below Temp” bore dimensions. Note this requirement in the part number of the bearing by adding suffix “B” (i.e. NA2GC7-1**B**) for below temp installation.

Stainless housings and Poly-Round® bearings can be used with ALL kinds of refrigerants including carbon dioxide and nitrogen.

- It is NEVER wise to use a lubricant in a low temperature freezer (the congealed grease will shorten the life of the bearing). For high speed or high tension low temperature locations, consider EDT’s low temperature solid lubricated ball bearings.
- ALWAYS use a threadlocker on all setscrews on rotating equipment.

EDT’s Sales and Engineering staff can assist with selecting the right bearing product for your low temperature needs.

*Continues on next page...*

# Heat

Heated locations like dryers, ovens and fryers are very common in many industries as food is cooked, bulk chemicals dried, fiber glass baked, and heat-treated metal parts quenched, etc. In high temperature applications, the expansion of different materials relative to each other causes design difficulties and must be addressed in the bearings that allow these heated devices to move.

Materials expand with increasing levels of temperature and things that are fixed at both ends of an expanding material will break. It is for this reason that expansion bearings came about. EDT's plane bearings work very well in high temperature conditions with a fixed bearing on the drive side of a device and an expanding bearing on the opposite side (see Fig 23-1).

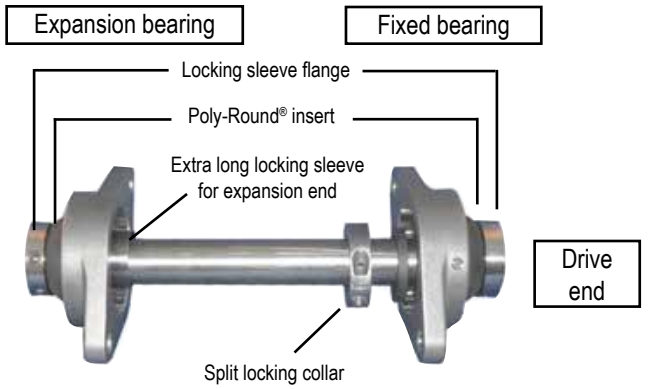


Fig 23-1

The **fixed bearing** should be an EDT Poly-Round® out of a high temperature material in a metal housing with a locking sleeve flange on one side of the bearing and a split set collar on the opposite side of the same bearing. This allows control of the lateral movement of the shaft to be contained by just the one bearing. The opposite **expansion bearing** should be a Poly-Round® insert with an extended length body locking sleeve. The locking sleeve fixed to the shaft now has a longer journal to accommodate the expansion of the shaft as temperature increases. The flange of the locking sleeve of the floating end bearing must be on the outboard side of the oven (see Fig 23-1). (Call EDT if space limitations require inside mount.)

Fryer bearings associated with food processing must, in most cases, be approved as a "food ingredient." EDT's FA bearing material makes the grade for temperature (operates to 500°F), for USDA/FDA criteria and for ease-of-maintenance. As with all other high-temperature applications, this must be in a Poly-Round® style.

High temperature locations with high speed or tension (flat belt take-ups, pumps, fans operating above 300°F ambient temperature) will be well served with high temperature, solid lubricated ball bearings. Operating temperature must be specified and stainless, standard or "special material" bearings are all available options.

Since continuous expansion and contraction of metals will cause threaded products to vibrate loose, it is necessary to use an appropriate threadlocker on all setscrews. With few exceptions, lubricants of all kinds should never be applied in hot applications.

# Horizontal shafts

The most common mounting orientation for shafting is horizontal. Mainly because of gravity it is easier to manage this orientation. All bearings must generally do three things:

1. Maintain shaft centerline
2. Allow movement in some direction and speed
3. Control shaft movement laterally through the bearing.

When horizontal, item 3 is much more manageable and causes less maintenance headaches.

Mounted ball bearings will generally have an extended inner ring with some type of mechanism for "gripping" the shaft which could be setscrews at 90° or a squeeze- or cam- lock mechanism. This will control the lateral movement of the shaft.

Plane bearings offer their own special challenges. In some applications, shafts are held in place by another machinery-specific mechanism while in others, a separate device is required. Sometimes, a separate locking collar that limits the movement opposite the direction of the collar is used. But EDT uses a built-in

*Continues on next page...*

flange on the locking sleeve to do that job. The fact that there are usually two bearings on a shaft allows the locking sleeve flange to be faced the opposite direction in order to control the shaft in both directions. On all horizontal installations, the location of the locking sleeve can be determined by the installer, but must either BOTH BE OUTSIDE OR BOTH BE INSIDE of the bearing (see Fig 24-1). Apply threadlocker when tightening the setscrews to insure that the locking sleeve will remain SECURELY in place.

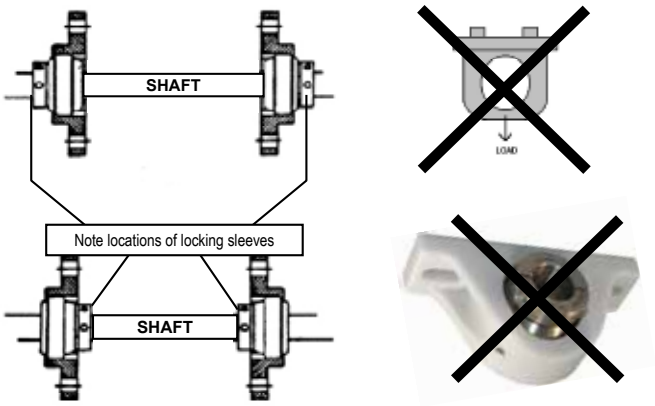


Fig 24-1

An additional benefit of the locking sleeve is to control the surface finish of the journal under the bearing, which significantly extends the life of the bearing.

Whenever possible, it is best to avoid mounting pillow blocks in an upside down position. If the design does not allow an upright mounting, then a metal housing is recommended.

## Bearing position in drive design

Some drive designs are easier on bearings than others. Many systems are designed with a cantilevered drive, but this type of design loads the bearing unevenly. Whenever possible, drives should be placed BETWEEN a pair of bearings. If a cantilevered design is required, the pair of bearings supporting that drive shaft should be separated as far apart as practical.

Whenever possible, shaft mounted gear reducers should have some support that relieves the cantilevered shaft as the sole support.

## Restricted spaces

In an attempt to continually make things smaller and compact, designers have to find ways to either buy smaller components, or to manage the orientation of components into smaller spaces. In some cases, this involves retrofits that reduce or eliminate the need for other design changes. EDT has designed this versatility into all of our bearing products.

EDT self-aligning bearings are not symmetrical around the major O.D. so they can be reversed in the housing which changes a design dimension without compromising the design load or requiring redesign of the product. This allows EDT bearings to retrofit into locations where other bearings will not physically fit without design changes to the rest of the equipment. EDT Locking Sleeves can also be installed from either the right or the left of every bearing which gives added flexibility to the installer. The combination of parts flexibility results in a total of four installation options that can be readily adjusted in the field (see Fig 24-2).

General maintenance and lubrication are growing problems as the equipment density of floor space increases in processing and manufacturing plants. EDT products reduce or eliminate lubrication and eliminate the catastrophic failure that often occurs with rolling element bearings in harsh environments. EDT bearings can reduce the unplanned maintenance that is required under extreme environments, which in turn reduces the overall cost of operations. Elimination of lubrication can reduce machine clutter because central lubrication systems can be eliminated.

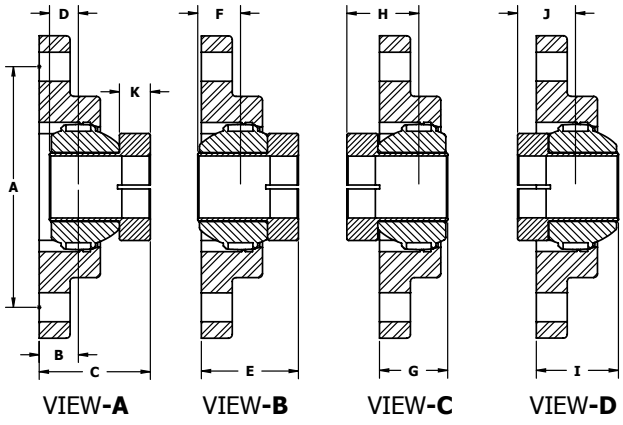


Fig 24-2

*Continues on next page...*

# Vertical shafts

Vertical shaft applications for rolling element and plane bearings must be carefully considered. There can be problems if details are not anticipated or are overlooked. For rolling element bearings, a tapered roller or an angular contact product is specified on many occasions because of their thrust capabilities.

For plane bearings, the same details that must be known for rolling element bearings apply. On plane bearings, the thrust surface is provided by either the full face of the bearing (in the case of EDT's Poly-Round® bearings) or on the polymer flange (in the case of EDT's ALL-ROUND® series). With both of these bearing styles, the thrust surface and the flange of the Locking Sleeve must be ON TOP of all of the bearings (see Fig 25-1). One bearing is chosen to be the first installed and the flange of the Locking Sleeve will be in full contact with the bearing. For all subsequent bearings on the same shaft, the flange of the Locking Sleeves will also have full contact. After the required "freewheel spin" to test for any misalignment, the units can be locked down and the drives connected. To prevent problems that often occur on vertical shafting, a final safety precaution is required: A SPLIT set collar must be placed directly on top of each locking sleeve flange to insure the shaft remains securely in the bearing despite load and vibration that would loosen the set screws on the flange of the locking sleeve (see Fig 25-1).

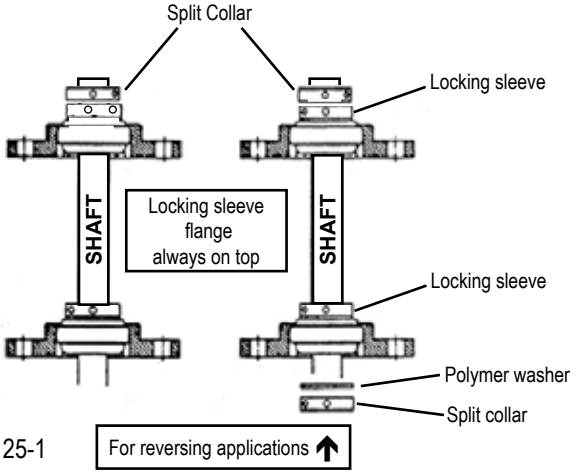


Fig 25-1

It is necessary to use an appropriate threadlocker on ALL setscrews because the continuous expansion and contraction of metals, however slight, cause threaded products to vibrate loose.

For reversing vertical applications with an All-Round® bearing assembly, a polymer thrust washer and split locking collar will be required below one bearing assembly (see Fig 25-1).

# Vibration & impact

Vibration and impact cause problems in multiple ways. These problems manifest themselves differently under varying conditions, so they are addressed here separately.

How **vibration** affects any bearing will depend on the frequency and amplitude (intensity) of the motion. A plane bearing operates with freeplay in the bearing so it can rotate or slide. This freeplay allows the shaft to shuttle back and forth in the bearing which can cause damage to the bearing and possibly to the machine. Freeplay can be a major source of heat in a bearing that can lead to early failure.

Rolling element bearings encounter this same freeplay action, although to a much lesser degree. The condition of the bearing races quickly become a serious issue when the shaft is loaded and then unloaded in the bearing; in some cases, this will cause the races to crack and fail.

Clearly, it is best to try to identify the source of the vibration and control it at the source as much as is possible. If that cannot be done, then high frequency vibration is most effectively handled by utilizing a preloaded rolling element bearing.

**Impact** load is different from higher frequency vibration and is generally better handled with plane bearings than ball bearings. There are a lot of issues to be considered here such as the choice of material that is necessary to perform in other parameters of the application. As a rule of thumb, higher performing materials are harder and more brittle while lower performing materials generally are softer and much more impact resistant. Fortunately, high impact situations usually do not require use of higher performing materials.

Rolling element bearings have hardened races in order to support the movement within ball bearings – the end result of hardening is more brittleness. Impact applications are normally solved with plane bearings than with rolling element bearings. As with all other harsh applications, vibration and impact will loosen setscrews, so an appropriate threadlocker is required.

# Installation and General Information about EDT Bearings

### General installation

Plane bearings and ball bearings must be set up properly in order to get the maximum design life out of each. One installation advantage of a plane bearing over a ball bearing is that, with a plane bearing, there is greater opportunity to detect an out-of-alignment condition before the equipment is put into operation. For each style of bearing, this is addressed in the Installation Instructions (pages O-8 through O-21 of this manual). Always apply threadlocker to locking sleeve setscrews to insure that the locking sleeve will remain SECURELY in place.

### New installations

Check new installations at start-up, and periodically for next couple hours.

> There is a problem if there is noise or if bearing is too hot to touch. For Troubleshooting Guide see page O-29.

Then check monthly or quarterly that:

- Locking sleeve stays in place
- Polymer is wearing evenly

### Dusty environments

In dusty and abrasive environments Forsheda V-ring seals work well to increase bearing life by reducing the exposure to contaminants. Your local EDT bearing distributor will be able to supply you with Forsheda seals. EDT's Bearing Glove® offers 360° protection around 3 kinds of mounted bearings. Refer to catalog or website section I-Misc Products and see page U-18 and 19 in this manual. Lubrication is never recommended for installations in dusty or abrasive environments because the lubricant will attract the dust and create an abrasive paste that will be more detrimental to the operation of the bearing.

### Bearing failure is caused by heat

Plane bearings fail because heat is generated faster than it can be dissipated and exceeds the long term temperature tolerance of the material. Maximum bearing life and cost effectiveness can be achieved by keeping plane bearings cool (artificial means such as water, other processing fluid, cooler air, metal housing) OR by upgrading the bearing material. Bearing failure due to heat can occur from any number of conditions, including:

- Use of plastic set collar to control thrust loads
- High loads
- High speeds
- High ambient temperature
- Out of round or bent shafting
- Poor shaft surface finish
- Edge loading caused by misalignment
- Poor bearing design for application
- Inappropriate material selection for application
- Some Special Application Conditions exist (see pages O-22 through O-25) that may not be sufficiently addressed

A secondary reason for plane bearing failure could be a chemical attack on the material that deteriorated the physical properties of the bearing. This will manifest itself primarily in three ways:

- Discoloration in areas of chemical attack
- Softening of the material surface
- Swelling of material or other slight changes in shape or configuration.

# Ways to Increase Bearing Performance

| Action | Result |
|---|---|
| Submersion in any liquid cooler than the normal operating temperature of the bearing | Helps to dissipate heat away from the polymer bearing |
| Lubrication (look under Special Application Conditions, pages O-22 thru O-25) | Lowers coefficient of friction and abrasion; reduces heat generation |
| Seal out solid contaminants (dirt, dust, chemicals, food processing powders, etc.) | Lowers coefficient of friction and abrasion; reduces heat generation |
| Improve shaft surface finish or install EDT locking sleeve (optimize at 10–12 RMS) | Lowers coefficient of friction and abrasion; reduces heat generation |
| Eliminate plastic locking collar; replace with stainless steel locking collar | Helps to dissipate heat from the polymer bearing |
| Upgrade polymer bearing material | Increases PV operating range; increases material's high temperature capacity; reduces chemical attack |
| Isolate from heat source by relocating or insulating bearing | Increases margin of PV available for application |
| Design power transmission drive so bearings evenly carry the load rather than the load being cantilevered | Better load distribution lowers PV and reduces heat generation |
| Check that locking sleeve is fully installed in bearing | Better load distribution lowers PV and reduces heat generation |

### Installation difficulties

If you have difficulty assembling spherical bearings into housings, or flange polymer bearings into ALL-ROUND® inserts, call the factory or your EDT representative for assistance. Polymer parts should be well chilled prior to installation for easiest assembly. Do not force units together if the installation does not go smoothly. In this respect EDT bearing installations are no different than radial ball bearing installations.

Test the mating parts prior to full installation by performing the following procedure:

1. Install the spherical insert into the installation slots in the spherical housing.
2. Using both hands, hold the bearing between your fingers like a key and turn the bearing in the housing like a key in a lock. (Do not use a separate tool to assist.) A bearing that fits properly will turn around in the housing until it reaches the original starting point (Fig 27-1). If it does not, check the following conditions:
   - Out-of-round housing
   - Out-of-round bearing
   - Tolerance mismatched of housing and bearing
   - Burr on I.D. of housing
   - Burr on O.D. of bearing
   - Loading slots not extended to centerline of spherical I.D. of housing.

Note: EDT self-aligning bearings should fit snugly but do not need to fit tight into the housing when they are swiveled into the final working position. They must be tight enough to prevent rotation of the bearing in the housing. A setscrew into the anti-rotation slot on the bearing O.D. insures that no rotation can occur.

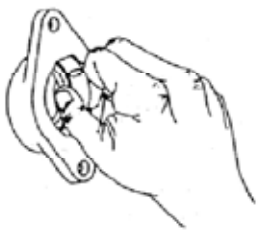

Fig 27-1

# Maintenance and Lubrication of EDT Bearings

| EDT Bearing Style | Lubrication | Start-up and General Maintenance |
|---|---|---|
| Poly-Round® bearings | None required | ▪ Should free-wheel on initial installation<br>▪ Should never get too hot to touch, but will run warmer than a ball bearing (outside of oven)<br>▪ Locking sleeve must be flush against bearing (with paper-thick gap), and all setscrews must have threadlocker<br>▪ When bearing wall is worn too far in one direction, remove and reinstall insert at 180º<br> |
| Polymer block bearings | None required | ▪ Should free-wheel on initial installation<br>▪ Should never get too hot to touch, but will run warmer than a ball bearing<br>▪ Locking sleeve must be flush against bearing (with paper-thick gap), and all setscrews must have threadlocker |
| ALL-ROUND® bearing (spherical and ER-style) | None required | ▪ Should free-wheel on initial installation<br>▪ Should never get too hot to touch, but will run warmer than a ball bearing (outside of oven)<br>▪ Locking sleeve must be flush against the polymer flange of the bearing “liner” (with paper-thick gap), and all setscrews must have threadlocker<br>▪ Replace bearing when polymer bearing “liner” wall has been reduced by 3/4 or when shaft centerline is a problem |
| Radial Poly-Round® | None required | ▪ Should free-wheel on initial installation<br>▪ Should never get too hot to touch but will run warmer than a ball bearing (outside of oven)<br>▪ Replace bearing when shaft centerline is a problem |
| Solid lubricated ball bearing | None required | ▪ Should free-wheel on initial installation<br>▪ Use threadlocker with all setscrews<br>▪ Should never get too hot to touch<br>▪ Replace bearing when temperature gets too hot or when bearing makes unusual noise or chatter |
| Re-grease-able stainless ball bearing | As application conditions require | ▪ Grease and seals prevent free-wheeling<br>▪ Use threadlocker with all setscrews<br>▪ Should never get too hot to touch (outside of oven)<br>▪ Replace bearing when temperature gets too hot or when bearing makes unusual noise or chatter |

# Troubleshooting EDT Bearings

| Problem | Cause |
|---|---|
| Cracked or broken flange on ALL-ROUND® polymer bearing | ▪ Anti-rotation setscrew locked and not allowing spherical insert to properly align<br>▪ High impact in radial or thrust direction<br>▪ Locking sleeves positioned and locked too close to the polymer flanges in high heat applications – when heat is removed and shaft shrinks, the locking sleeves pinch the bearing<br>▪ Centerline of bearing not lined up with shaft centerline (edge loading) |
| Excessive heat accumulating in ALL-ROUND® bearing | ▪ Polymer bearing material not suited for application<br>▪ Centerline of bearing not lined up with shaft centerline (edge loading)<br>▪ Locking sleeve flange mounted too close to polymer bearing<br>▪ Locking sleeve mounted on wrong side of polymer flange and making metal-to-metal contact with stainless steel insert<br>▪ Excessive buildup of contaminants in bearing<br>▪ Chemical deterioration<br>▪ Locking sleeve flange is improperly making contact with a fixed object |
| Excessive heat accumulating in Poly-Round® insert or block bearing | ▪ Anti-rotation setscrew locked and not allowing spherical insert to self-align<br>▪ Locking sleeve flange mounted too close to polymer bearing<br>▪ Polymer bearing material not suited for application<br>▪ Improper bore clearances<br>▪ Chemical deterioration<br>▪ Excessive buildup of contaminants in bearing<br>▪ Centerline of bearing is not in line with shaft centerline (edge-loading)<br>▪ Locking sleeve flange is improperly making contact with a non-rotating machine part |
| Locking sleeve moving out of position | ▪ Excessive thrust loading on bearing<br>▪ Undersized shaft for DoubleLock®<br>▪ Improper torque rating on screws<br>▪ Loctite® or other thread locker not used<br>▪ Back-up split set collar not installed behind locking sleeve flange |
| Ball bearing with excessive noise, vibration, or heat | ▪ Bearing is not aligned properly with shaft<br>▪ Too much grease packed in bearing<br>▪ Too little grease in bearing<br>▪ Races or balls damaged during installation<br>▪ Brinelling, spalling, surface contamination, corrosion, fit too loose or too tight. (See Google search for “ball bearing failure.”) |

Questions or concerns about EDT products? Please call the factory at:

**360-574-7294**

Monday - Friday 7:00 a.m. to 5:00 p.m. Pacific Time (Vancouver, Washington USA)

# ENGINEERING NOTES