Stainless Ball Bearing Solution®





Solution® Eccentric
Pg F10 - F34





Solution® Set Screw
Pg F48 - F72



QuiKlean® Eccentric
Pg F34 - F47



ER (Set Screw)
Pg F5



QuiKlean® Set Screw
Pg F72 - F85



Pg F7
Pg F10 - F47



Breader Bearings
Pg F35, F73



Set-Screw
Pg F8 - F9
Pg F48 - F85

Ball bearings for severe service environments

Inserts only or mounted units

Insert bearings made of 440-stainless steel (or other materials as appropriate)

- Eccentric lock, wide inner ring in the most popular shaft sizes
- Set-screw lock, wide inner ring in almost every shaft size
- 'ER' bearings (cylindrical OD with snap ring): 5/8" to 1-1/2"

- Choose food grade grease or various solid lubricants
- Stainless in shafts from 1/2" to 3" and metric
- EDT Solution® bearing housings (stainless or polymer) are USDA-accepted, and ideal for HACCP/ HARPC programs

We recommend ball bearings for the following applications:

- High speed devices (i.e. fans, pumps, table top conveyors)
- High tension (i.e. flat belt conveyors, v-belt drives, round/urethane belts, curved conveyors)
- Overhung loads (i.e. shaft mounted gear reducers)
- Trunnions

Grease-Free with Solid Lubricants

When bearings operate in severe service environments that compromise grease, and the application is not appropriate for a plane bearing, solid lubricant may be a good alternative. EDT solid lubricants can extend the life of ball bearings in areas where lubrication issues exist. Solid lube bearings:

- Are lubricated for life
- Are more resistant to washout than greased bearings
- Do not require re-greasing
- Keep contamination out because they are 100% filled

Two Solid Lubricant Options

EPL: EDT Polymer Lubricants



How EDT Polymer Lubricants work

EPL's micro-porous structure traps oil throughout its entire mass and slowly delivers lubrication to the bearing as needed. As the bearing rotates and the rolling element track warms, oil is released from the interconnected micro pores of the solid polymer to lubricate the bearing. When the bearing slows and cools, the oil is again retained in the matrix through surface tension.

EPL formulas contain 50% to 80% oil by weight, which is 2 to 5 times more oil than standard grease. The oil-permeated solid polymer also fills and seals the open space of the bearing to block out contaminants that lead to early bearing failure.

Advantages of solid polymer lubricants

- Eliminate need for re-lubrication
- Consistently deliver the right amount of lubrication
- Resist contamination
- Stand up to harsh applications and wash downs
- Dramatically improve cleanliness

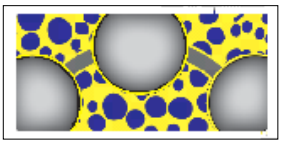

EGL: EDT Graphite Lubricants



How EDT Graphite Lubricants work

EGL lubricants are composites of natural graphite with fiber filler in organic binders. The resulting lubricant is black due to the graphite. The atomic structure of carbon makes graphite chemically inert to almost all compounds, including acids, alkalis and organic solvents. It is less resistant to oxidizing chemicals such as peroxides, chlorates, perchlorates, nitrates, and permanganates.

EGL uses amost 100% of the space between the races; when bearing moves, graphite is deposited on every surface, preventing metal-to-metal contact and hielding a very low-friction bearing.

Advantages of graphite lubricants

- Eliminate need for re-lubrication
- Consistently deliver the right amount of lubrication
- Resist contamination (hard matrix is more abrasive-resistant than polymers)
- Stand up to harsh applications and wash downs
- Dramatically improve cleanliness

EDT Solid Lubricants

EDT Solid Lube PN Indicator	Food-Grade Solid Lubricant Type	'Food grade' lubricants are rated H-1 (incidental food contact)	Color	Operating Temperature
F	EPL	Food grade oil- permeated polymer solid lube utilizing high performance synthetic lubricants. Formulated to withstand and inhibit corrosion in most food-processing environments that involve moisture and wash-down, performs equally well in similar industrial applications. Low temp to -55°F (-48°C).	white	-55°F to 200°F (-48°C to 93°C)
B	EPL	Food grade oil-permeated polymer solid lube utilizing high performance synthetic lubricants. Same kinds of food-processing and industrial applications as F lube (withstand moisture, corrosion inhibitors) with low temp to -65°F (-54°C)	white	-65°F to 200°F (-54°C to 93°C)
K	EPL	Food grade oil-permeated polymer solid lube utilizing high performance synthetic lubricants. Moisture resistance and corrosion inhibitors like F lube, with the ability to operate in high temps to 350°F (176°C)	white	-25°F to 350°F (-32°C to 176°C)
C	EPL	Food grade oil-permeated polymer solid lubricant utilizing high performance synthetic lubricants. Designed to resist moisture, with more aggressive resistance to cleaners including strong oxidizers (elements that are high pH.) High temp stability to 350°F (176°C)	white	-33°F to 350°F (-36°C to 176°C)
W	EGL	Food grade graphite-based solid lube resistance to most chemicals (wide pH range, except extreme pH.) Unaffected by moisture, radiation and UV resistant. Wide temperature range -150°F to 250°F. Low friction. Inert nature of graphite can be useful in wide range of applications. EGL is brittle and impact may accelerate loss of the lube. Vacuum grade available: WV.	black	-150°F to 250°F (-101°C to 121°C)
M	EGL	Food grade graphite based solid lubricant designed to operate within the range of most high temperature processing applications, from 250°F to 450°F including submerged in oil & other liquids, in ovens and fryers. UV- and radiation- resistant. Low friction. Hardness of lube can be advantageous with abrasion. EGLs are brittle, M is more brittle than W. Vacuum grade available: MV.	black	250°F to 450°F (121°C to 232°C)
T	EGL	Food grade graphite based solid lubricant designed to operate within the range of industrial- and some food- processing applications, from 450°F to 650°F; intermittently to 900°F is feasible. Abrasion-, radiation- and UV- resistant. Low friction. EGLs are brittle, T more brittle than M. Vacuum grade available: TV.	black	450°F to 650°F (232°C to 343°C)
Note: solid lubricants reduce the maximum speed and load capacity of bearings				

EDT Ball Bearing Part Numbering System

Ball Bearing Material		Ball Bearing Style		Bearing or Housing Size		Modifier		Shaft	Lubricant* See EDT Solid Lubricants chart on pg F-2		Modifier	
4	400 stainless	Y	Set screw (Classic)	Examples:		Blank	Bearing only (not assembly)	Size in 16ths	G	Food grade grease: Mobilgrease FM222 Freezer to oven	X	Standard
3	300 stainless	U	Wide eccentric (Choice)	205	Ring size				F	Food grade EPL -55°F to 200°F / -48°C to 93°C	Z	Shield
5	NC steel	E	Narrow eccentric	1GE	Housing group	8	Mounted ball bearing in housing		B	Food grade EPL -65°F to 200°F / -54°C to 93°C	O	Open
6	52100 steel	0	Unmounted	Details in charts below					K	Food grade EPL -25°F to 350°F / -32°C to 176°C	SM	Wider unit
7	Alloy	F	Flanged unmounted						C	Food grade EPL -33°F to 350°F / 36°C to 176°C		
		B	Set screw (Value)						W	Food grade EGL -150°F to 250°F / -101°C to 121°C		
									M	Food grade EGL 32°F to 450°F / 0°C to 232°C		
									T	Food grade EGL 40°F to 650°F / 5°C to 343°C		
									J, P, E	Solid lubricants EPL By special arrangement		
									R	Industrial EPL 40°F to 500°F / 5°C to 260°C		

*Lubricants listed as food grade are designated H1

EPL: EDT polymer solid lubricant
EGL: EDT graphite solid lubricant

Housing Shape / Profile Indicators

Indicators	Housing styles
1	Pillow block
2	2-Bolt flange
3	3-Bolt, extension
4	4-Bolt
5	Take-up, narrow
6	2-Bolt flange, small bolt pattern
7	Take-up, wide
8	Hanger
9	Tapped base pillow block
10	Pillow block, low backing height
22	3-Bolt, triangular
23	3-Bolt, extension, smaller profile
24	4-Bolt, piloted
32	3-Bolt, round

Housing Material Indicators

Indicators	Housing material
G	Polymer; EDT "KG"
A	Stainless 304/316
F	Cast iron
P	Cast stainless
E	Type E stainless

Group / Size Indicators

Ball Bearing Ring Size	Spherical Size: Ball Bearing OD Housing ID	EDT Group Size
201, 202, 203	1.575" / 40mm	A
204	1.850" / 47mm	B
205	2.047" / 52mm	C
206	2.441" / 62mm	D
207	2.835" / 72mm	E
208	3.150" / 80mm	F
209	3.346" / 85mm	G
210	3.543" / 90mm	H
211	3.937" / 100mm	I
212	4.331" / 110mm	J
214	4.921" / 125mm	K
215	5.128" / 130mm	L

Additional Sizes (not available in SS)

Ring Size	Spherical OD	EDT Group Size
213	4.724" / 120mm	Z
216	5.511" / 140mm	M
217	5.905" / 150mm	N
218	6.299" / 160mm	O
219	6.693" / 170mm	P
220	7.480" / 190mm	Q
221	7.874" / 200mm	R

Stainless Steel Insert Bearings - Technical Data

Materials of EDT Stainless Steel Insert Bearings	
Available styles	Set screw (Y or B), eccentric (U)
Races and balls	440C SS
Retainer (cage), flingers	300-series SS
Collar	300-series SS (U)
Seals - single lip	Silicon rubber (Y or U) -60°F to 400°F / -51°C to 204°C Buna-N (B) -30°F to 250°F / -34°C to 121°C
Grade of balls	G16
Set screws	300-series SS (at 120°)
Grease	FM221 (FM222-B) food grade grease or EPL or EGL (refer to page F-2)

Speed and Load Capacity of Insert Bearings			
	Speed	Load lbf	
Ring	RPM	Static Load	Dynamic
204	4835	1190	2435
205	4610	1425	2650
206	4050	2040	3720
207	3690	2751	4900
208	3240	3240	5595
209	3015	3580	6250
210	2700	4190	6770
211	2250	5387	8165
212	1950	6590	9980
214	1680	7210	10860
215	1450	8220	11420

Bearing Internal Clearances

EDT stainless steel ball bearings are made to the Normal or 'CN' (Class Normal) standard for fit and tolerancing of insert (mounted) bearings.

Normal fit in combination with typical 440C martensitic stainless steel material and associated heat treating, indicate EDT bearings meet the speed and load ratings standard with all bearings in this class. Refer to chart.

Operational parameters: if any of these…	Bearing Internal Clearance
Low to no load Low speed Temperature: Cryogenic to room temperature Requirement for fairly close tolerance No preload	C2
Moderate load Low to medium speed Temperature: Freezing to boiling Low torque Light preload Slight interference fit on either I.D. or O.D.	CN (Class Normal)
High load High temperature: Room temperature to 650°**F** Very low torque Preloaded Significant interference fit	C3, C4, C5

The life of all bearings will vary according to their environment, speed, and load, as well as the lubrication that is specified.

EDT bearings are designed for middle market applications such as conveyors, packaging machines, food processing equipment, machinery, and general fans. They are not designed for devices such as very high speed fans, high speed spindles, or precision equipment. For applications with these conditions, please contact our technical sales staff for possible custom products.



Seals

EDT ball bearings are configured with single lip seals on each side of the retainers. Insert bearings typically are covered by 302 stainless flanges.

Shaft size tolerances required for insert bearings		
		
Shaft size	**Ball bearing insert* (Y+B)**	**Ball bearing insert* (U)**
1/2" to 1-15/16"	nominal to -.0006" no plus	nominal to -.0006" no plus
2" to 3-1/8"	nominal to -.0007" no plus	nominal to -.0007" no plus
3-1/4" to 4-1/2"	nominal to -.0009" no plus	nominal to -.0009" no plus

- *The fit between the shaft and the bearing must be on the low end of the tolerance in order to be able to reach the maximum capacities of a bearing.*
- *For heavy loads, there should also be a close fit between ball bearing and the shaft. For heavy loads where there is NOT high speed, consider plane bearings, like EDT Poly-Round®.*
- *TGP (Turned, Ground and Polished) shafting is recommended for applications with higher operating speeds.*

Tightening torque limits of stainless set screws			
On set screw locking bearings			
203-206 ring A-D	207-209 ring E-G	210-212 ring H-J	214-215 ring L-M
29 inch-pounds	60 inch-pounds	110 inch-pounds	~170 inch-pounds
*An alternative to set screw locking is eccentric locking ball bearings. Eccentric style is a more positive locking system than set screws. Eccentric bearings are not for reversing installations.			
On eccentric locking bearings			
203-205 ring A-C	206-210 ring D-H	211-215 ring I-L	216-220 ring M-P
35 inch-pounds	74 inch-pounds	~155 inch-pounds	~245 inch-pounds
When mounting bearing insert onto shaft, torque pressure for inner race set screws should not exceed these limits.			

Materials of EDT Steel Insert Bearings	
Some applications do not need the non-corrosive properties of stainless steel. Steel bearings have 2 times the speed and load capacity of stainless ball bearings (style 6).	
Available styles	Set screw (Y), Eccentric (U)
Races and balls	52100 steel
Retainer (cage), flingers	#8 steel
Seals - single lip	Buna-N with steel backing -30°F to 250°F / -34°C to 121°C
Set screws, anti-rotation pins, rivets	#45 steel
Grease	Industrial grease or EPL or EGL

Idle Bearing Maintenance Recommendations by EDT

Refer to Technical Update 6-1-2015, EDT product catalog page T-27: "Maintenance Recommendation for Extended Idle Bearing Conditions"

ER Style Ball Bearing

ER style set screw stainless ball bearing Series “4Y”

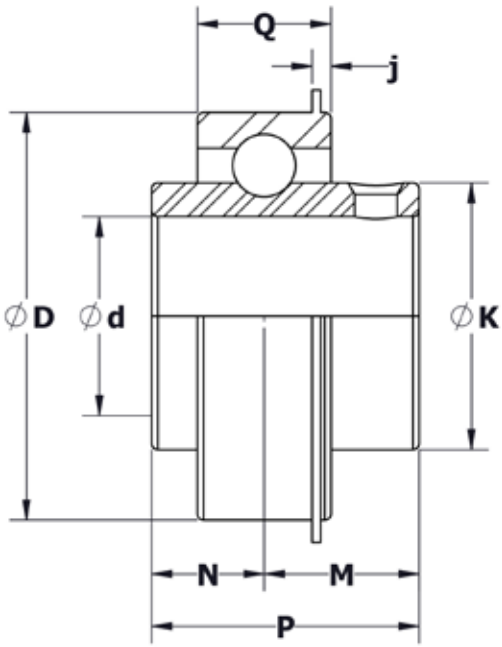

Materials of EDT Stainless Steel ER Bearings	
Available styles	Set screw (Y)
Races and balls	440C SS
Retainer (cage), flinger	300-series SS
Seals	Silicon rubber (single lip)
Set screws (at 120°)	300-series SS
Grade of balls	G16
Snap Ring	300 series stainless or Nickel-plated



“x” indicates a 2-letter designation for lube & seals

PART NUMBER	ER Interchange	Ød Shaft Diameter	ØD in. mm	ØK in. mm	j in. mm	M in. mm	N in mm	P in. mm	Q in. mm	2 ea ss set screw	Wt. lbs.
4YER204-10 X 4YER204-12 X 4YER204-20M X	ER-10 ER-12 ER-204	5/8" 3/4" 20mm	1.850 47.0	1.14 29.0	0.09 2.4	0.81 20.7	0.41 10.3	1.22 31.0	0.63 15.9	1/4-28	0.46
4YER205-25M X 4YER205-16 X	ER-205 ER-16	25mm 1"	2.047 52.0	1.34 34.0	0.09 2.4	0.86 21.8	0.52 13.1	1.38 34.9	0.75 19.1	1/4-28	0.60
4YER206-19 X	ER-19	1-3/16"	2.441 62.0	1.60 40.6	0.13 3.2	0.88 22.2	0.63 15.9	1.50 38.1	0.88 22.2	1/4-28	0.80
4YER207-20 X	ER-20	1-1/4"	2.835 72.0	1.87 47.4	0.13 3.2	1.00 25.4	0.69 17.5	1.69 42.9	0.94 23.8	5/16-24	1.20
4YER208-24 X	ER-24	1-1/2"	3.150 80.0	2.08 52.7	0.13 3.2	1.19 30.1	0.75 19.1	1.94 49.2	1.09 27.8	5/16-24	1.54

X indicates a 2-letter designation for lube & seals

G = food grade grease
F = food grade EPL
Other alpha - refer to page 3
X = standard configuration
O = open (no seal or flinger)
Others - refer to page 3

Example: GX = food grade grease with standard seals & flingers

BALL BEARING INSERTS CONTINUE ON PAGE 7

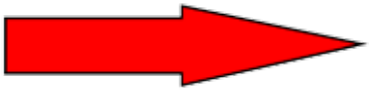

Eccentric Style Ball Bearing Insert - CHOICE SERIES

CHOICE

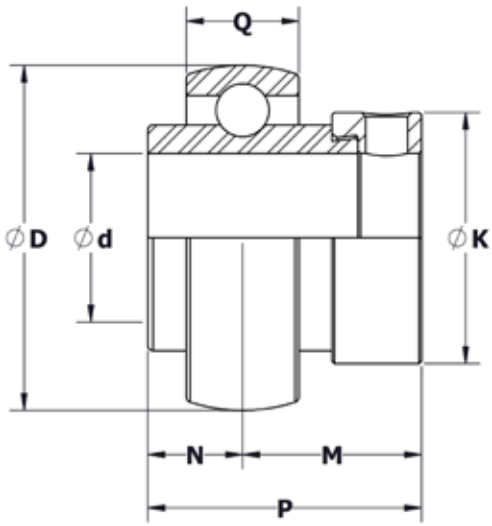

Series "4U"

Available as insert only or assembled in housing

Materials of EDT Stainless Steel Insert Bearings	
Available styles	Eccentric (U)
Races and balls	440C SS
Retainer (cage), flinger	300-series SS
Collar	300-series SS
Seals	Silicon rubber (single lip)
Grade of balls	G16
Grease	Food-grade grease or solid lubricant with seals and flingers as appropriate



More Sizes / Styles
Inserts pgs F-5 to F-9
Eccentric inserts in SS or KG: pgs F-10 to F-34
QuiKlean® eccentric: pgs F-34 to F-47
Set screw inserts in SS or KG: pgs F-48 to F-72
QuiKlean® set screw: pgs F-72 to F-85

"x" indicates a 2-letter designation for lube & seals

PART NUMBER	Ød Shaft Diameter	ØD in. mm	ØK in. mm	M in. mm	N in mm	P in. mm	Q in. mm	1 ea ss set screw	Wt. lbs.
4U203-08 X 4U203-10 X	1/2" 5/8"	1.575 40	1.13 28.6	0.91 23.1	0.39 10.0	1.30 33.1	0.59 15.0	10-32	0.29
4U204-10 X 4U204-12 X 4U204-20M X	5/8" 3/4" 20mm	1.850 47	1.31 33.3	1.05 26.6	0.5 12.7	1.55 39.3	0.67 17.0	1/4-28	0.42
4U205-25M X 4U205-16 X	25mm 1"	2.047 52	1.50 38.1	1.06 26.9	0.56 14.3	1.62 41.2	0.67 17.0	1/4-28	0.50
4U206-30M X 4U206-19 X 4U206-20 X	30mm 1-3/16" 1-1/4"	2.441 62	1.75 44.5	1.19 30.1	0.63 15.9	1.81 46.0	0.75 19.0	5/16-24	0.80
4U207-20 X 4U207-22 X 4U207-23 X	1-1/4" 1-3/8" 1-7/16""	2.835 72	2.19 55.6	1.27 32.3	0.69 17.5	1.96 49.8	0.79 20.0	5/16-24	1.28
4U208-24 X 4U208-40M X	1-1/2" 40mm	3.150 80	2.37 60.3	1.37 34.9	0.75 19.0	2.12 53.9	0.87 22.0	5/16-24	1.71
4U209-28 X	1-3/4"	3.346 85	2.50 63.5	1.37 34.9	0.75 19.0	2.12 53.9	0.87 22.0	5/16-24	1.70
4U210-31 X 4U210-50M X 4U210-32 X	1-15/16" 50mm 2"	3.543 90	2.75 69.9	1.50 38.1	0.75 19.0	2.25 57.1	0.95 24.0	5/16-24	1.94
4U211-32 X 4U211-35 X	2" 2-3/16"	3.937 100	3.00 76.2	1.72 43.6	0.87 22.2	2.59 65.8	0.98 25.0	3/8-24	3.07
4U212-39 X	2-7/16"	4.331 110	3.32 84.2	1.84 46.8	1.00 25.4	2.84 72.2	1.06 27.0	3/8-24	3.51
4U214-44 X	2-3/4"	4.921 125	4.02 102.0	1.94 49.2	1.19 30.2	3.13 79.4	1.14 29.0	3/8-24	4.91
4U215-47 X 4U215-75M X 4U215-48 X	2-15/16" 75mm 3"	5.118 130	4.02 102.0	2.15 54.6	1.31 33.3	3.46 87.9	1.26 32.0	3/8-24	5.75

X indicates a 2-letter designation for lube & seals

G = food grade grease
F = food grade EPL
Other alpha - refer to page 3
X = standard configuration
O = open (no seal or flinger)
Others - refer to page 3

Example: GX = food grade grease with standard seals & flingers

Set Screw Style Ball Bearing - CLASSIC SERIES

CLASSIC

Series "4Y"

Available as insert only or assembled in housing

Materials of EDT Stainless Steel Insert Bearings	
Available styles	Set screw (Y)
Races and balls	440C SS
Retainer (cage), flinger	300-series SS
Seals	Silicon rubber (single lip)
Set screws (at 120°)	300-series SS
Grade of balls	G16
Grease	Food-grade grease or solid lubricant with seals and flingers as appropriate



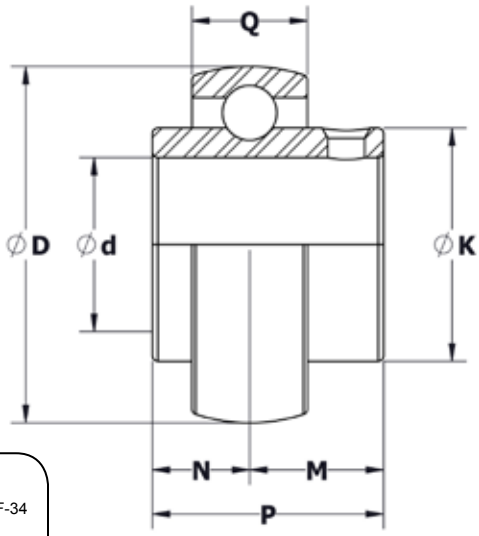

"x" indicates a 2-letter designation for lube & seals

More Sizes / Styles
Inserts pgs F-5 to F-9
Eccentric inserts in SS or KG: pgs F-10 to F-34
QuiKlean® eccentric: pgs F-34 to F-47
Set screw inserts in SS or KG: pgs F-48 to F-72
QuiKlean® set screw: pgs F-72 to F-85

Part #	Ød Shaft Diameter	ØD in. mm	ØK in. mm	M in. mm	N in mm	P in. mm	Q in. mm	2 ea ss set screw	Wt. lbs.
4Y203-12M X 4Y203-08 X 4Y203-09 X 4Y203-15M X 4Y203-10 X 4Y203-17M X	12mm 1/2" 9/16" 15mm 5/8" 17mm	1.575 40	0.97 24.6	0.61 15.5	0.41 10.5	1.02 26.0	0.59 15.0	10-24	0.22
4Y204-12M X 4Y204-08 X 4Y204-15M X 4Y204-10 X 4Y204-17M X 4Y204-11 X 4Y204-12 X 4Y204-20M X	12mm 1/2" 15mm 5/8" 17mm 11/16" 3/4" 20mm	1.850 47	1.14 29.0	0.72 18.3	0.50 12.7	1.22 31.0	0.63 16.0	1/4-28	0.35
4Y205-12 X 4Y205-14 X 4Y205-15 X 4Y205-25M X 4Y205-16 X	3/4" 7/8" 15/16" 25mm 1"	2.047 52	1.34 34.0	0.78 19.7	0.56 14.3	1.34 34.0	0.67 17.0	1/4-28	0.40
4Y206-16 X 4Y206-17 X 4Y206-18 X 4Y206-30M X 4Y206-19 X 4Y206-20 X	1" 1-1/16" 1-1/8" 30mm 1-3/16" 1-1/4"	2.441 62	1.59 40.5	0.87 22.2	0.63 15.9	1.50 38.1	0.75 19.0	5/16-24	0.67
4Y207-19 X 4Y207-20 X 4Y207-21 X 4Y207-22 X 4Y207-35M X 4Y207-23 X	1-3/16" 1-1/4" 1-5/16" 1-3/8" 35mm 1-7/16""	2.835 72	1.84 46.8	1.00 25.4	0.69 17.5	1.69 42.9	0.79 20.0	5/16-24	1.10
4Y208-23 X 4Y208-24 X 4Y208-40M X	1-7/16" 1-1/2" 40mm	3.150 80	2.08 52.8	1.19 30.2	0.75 19.0	1.94 49.2	0.83 21.0	5/16-24	1.41
4Y209-24 X 4Y209-26 X 4Y209-27 X 4Y209-28 X 4Y209-45M X	1-1/2" 1-5/8" 1-11/16" 1-3/4" 45mm	3.346 85	2.31 58.6	1.19 30.2	0.75 19.0	1.94 49.2	0.87 22.0	5/16-24	1.48
4Y210-28 X 4Y210-30 X 4Y210-31 X 4Y210-50M X 4Y210-32 X	1-3/4" 1-7/8" 1-15/16" 50mm 2"	3.543 90	2.45 62.2	1.28 32.6	0.75 19.0	2.03 51.6	0.91 23.0	5/16-24	1.68
4Y211-32 X 4Y211-55M X 4Y211-35 X 4Y211-36 X	2" 55mm 2-3/16" 2-1/4"	3.937 100	2.76 70.0	1.32 33.4	0.87 22.2	2.19 55.6	0.95 24.0	3/8-24	2.2
4Y212-36 X 4Y212-60M X 4Y212-39 X	2-1/4" 60mm 2-7/16"	4.331 110	3.03 77.0	1.56 39.7	1.00 25.4	2.56 65.1	1.02 26.0	3/8-24	3.0
4Y214-39 X 4Y214-40 X 4Y214-70M X 4Y214-44 X	2-7/16" 2-1/2" 70mm 2-3/4"	4.921 125	3.43 87.0	1.75 44.4	1.19 30.2	2.94 74.6	1.14 29.0	7/16-20	4.3
4Y215-40 X 4Y215-43 X 4Y215-44 X 4Y215-45 X 4Y215-47 X 4Y215-75M X 4Y215-48 X	2-1/2" 2-11/16" 2-3/4" 2-13/16" 2-15/16" 75mm 3"	5.118 130	3.60 91.5	1.75 44.5	1.31 33.3	3.06 77.8	1.18 30.0	1/2-20	4.4

X indicates a 2-letter designation for lube & seals
G = food grade grease
F = food grade EPL
Other alpha - refer to page 3
X = standard configuration
O = open (no seal or flinger)
Others - refer to page 3
Example: GX = food grade grease with standard seals & flingers

Set Screw Style Ball Bearing - VALUE SERIES

VALUE

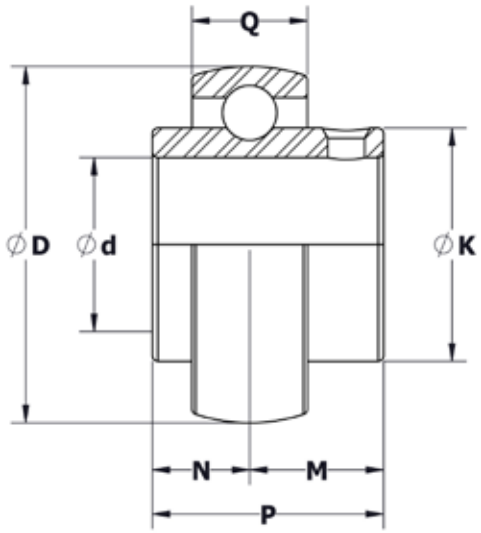

Series "4B"

Available as insert only or assembled in housing

Materials of EDT Stainless Steel Insert Bearings	
Available styles	Set screw (B)
Races and balls	440C SS
Retainer (cage), flinger	300-series SS
Seals	Buna-N
Set screws (at 120°)	300-series SS
Grade of balls	G16
Grease	Food-grade grease or solid lubricant that is flush-filled ("open")



More Sizes / Styles
Inserts pgs F-5 to F-9
Eccentric inserts in SS or KG: pgs F-10 to F-34
QuiKlean® eccentric: pgs F-34 to F-47
Set screw inserts in SS or KG: pgs F-48 to F-72
QuiKlean® set screw: pgs F-72 to F-85

"x" indicates a 2-letter designation for lube & seals

Part #	Ød Shaft Diameter	ØD in. mm	ØK in. mm	M in. mm	N in mm	P in. mm	Q in. mm	2 ea ss set screw	Wt. lbs.
4B204-12 X 4B204-20M X	12mm 20mm	1.850 47	1.14 29.0	0.72 18.3	0.50 12.7	1.22 31.0	0.63 16.0	1/4-28	0.35
4B205-25M 6 X 4B205-16 6 X	25mm 1"	2.047 52	1.34 34.0	0.78 19.7	0.56 14.3	1.34 34.0	0.67 17.0	1/4-28	0.40
4B206-30M X 4B206-19 X 4B206-20 X	30mm 1-3/16" 1-1/4"	2.441 62	1.59 40.5	0.87 22.2	0.63 15.9	1.50 38.1	0.75 19.0	5/16-24	0.67
4B207-20 X 4B207-35M X 4B207-23 X	1-3/16" 35mm 1-7/16""	2.835 72	1.84 46.8	1.00 25.4	0.69 17.5	1.69 42.9	0.79 20.0	5/16-24	1.10
4B208-24 X 4B208-40M X	1-1/2" 40mm	3.150 80	2.08 52.8	1.19 30.2	0.75 19.0	1.94 49.2	0.83 21.0	5/16-24	1.41
4B209	Available for special order	3.346 85	2.31 58.6	1.19 30.2	0.75 19.0	1.94 49.2	0.87 22.0	5/16-24	1.48
4B210	Available for special order	3.543 90	2.45 62.2	1.28 32.6	0.75 19.0	2.03 51.6	0.91 23.0	5/16-24	1.68
4B211	Available for special order	3.937 100	2.76 70.0	1.32 33.4	0.87 22.2	2.19 55.6	0.95 24.0	3/8-24	2.2
4B212	Available for special order	4.331 110	3.03 77.0	1.56 39.7	1.00 25.4	2.56 65.1	1.02 26.0	3/8-24	3.0

X indicates a 2-letter designation for lube & seals

G = food grade grease
F = food grade EPL
Other alpha - refer to page 3
X = standard configuration
O = open (no seal or flinger)
Others - refer to page 3

Example: GX = food grade grease with standard seals & flingers

ECCENTRIC BALL BEARINGS BEGIN ON PAGE 10

Stainless Ball Solution® Pillow Block

CHOICE

Eccentric lock stainless ball bearing Series “4U”
Standard backing height Series “1”
Stainless housing Series “A”



More Sizes / Styles
Inserts pgs F-5 to F-9
Eccentric inserts in SS or KG: pgs F-10 to F-34
QuiKlean® eccentric: pgs F-34 to F-47
Set screw inserts in SS or KG: pgs F-48 to F-72
QuiKlean® set screw: pgs F-72 to F-85

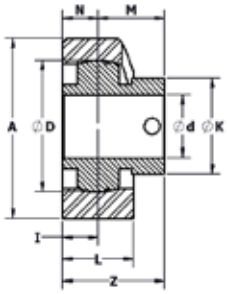

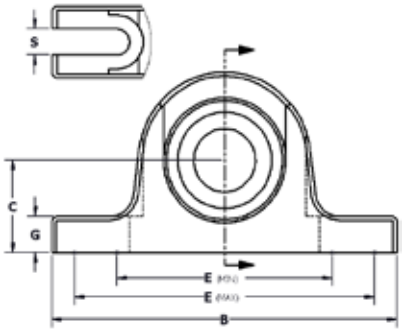

Stainless Housing

“x” indicates a 2-letter designation referring to lube & seals

MOUNTED BEARING PART NUMBER	d			Sphere OD size								Sph. depth	Bolt size			Overall LTB of brg (I+M)	Brg collar size	Housing	Ball bearing PN
	mm	in	16th	D	A	B	C	E min	E max	G	L	I	S	M	N	Z	K	PN	WIDE ECC
				1.575	2.13	5	1.06	2.94	4.06	0.44	1.13	0.56	3/8	0.91	0.39	1.47	1.13	1AA	
4U1AA8-08 x		1/2	8	40	54.1	127.0	26.9	74.7	103.1	11.2	28.7	14.2		23.1	9.9	37.3	28.7		4U203-08 x
4U1AA8-10 x		5/8	10																4U203-10 x
				1.850	2.56	5.25	1.31	3.25	4.38	0.5	1.13	0.56	3/8	1.05	0.5	1.61	1.31	1AB	
4U1AB8-08 x		1/2	8	47	65.0	133.4	33.3	82.6	111.3	12.7	28.7	14.2		26.7	12.7	40.9	33.3		4U204-08 x
4U1AB8-10 x		5/8	10																4U204-10 x
4U1AB8-12 x		3/4	12																4U204-12 x
4U1AB8-20M x	20M																		4U204-20M x
				2.047	2.81	5.5	1.44	3.44	4.63	0.56	1.13	0.56	3/8	1.06	0.56	1.62	1.5	1AC	
				52	71.4	139.7	36.6	87.4	117.6	14.2	28.7	14.2		26.9	14.2	41.1	38.1		
4U1AC8-25M x	25M																		4U205-25M x
4U1AC8-16 x		1	16																4U205-16 x
				2.441	3.25	6.25	1.69	4.13	5.13	0.69	1.47	0.73	1/2	1.19	0.63	1.92	1.75	1AD	
				62	82.6	158.8	42.9	104.9	130.3	17.5	37.3	18.5		30.2	16.0	48.8	44.5		
4U1AD8-30M x	30M																		4U206-30M x
4U1AD8-19 x		1-3/16	19																4U206-19 x
4U1AD8-20 x		1-1/4	20																4U206-20 x
				2.835	3.75	6.56	1.88	4.69	5.44	0.69	1.47	0.73	1/2	1.27	0.69	2.00	2.19	1AE	
4U1AE8-20 x		1-1/4	20	72	95.3	166.6	47.8	119.1	138.2	17.5	37.3	18.5		32.3	17.5	50.8	55.6		4U207-20 x
4U1AE8-22 x		1-3/8	22																4U207-22 x
4U1AE8-35M x	35M																		4U207-35M x
4U1AE8-23 x		1-7/16	23																4U207-23 x
				3.150	4.19	7.25	2.13	5	6.13	0.75	1.63	0.81	1/2	1.37	0.75	2.18	2.37	1AF	
4U1AF8-24 x		1-1/2	24	80	106.4	184.2	54.1	127.0	155.7	19.1	41.4	20.6		34.8	19.1	55.4	60.2		4U208-24 x
4U1AF8-40M x	40M																		4U208-40M x
				3.346	4.25	7.44	2.13	5.31	6.31	0.75	1.72	0.86	1/2	1.37	0.75	2.23	2.5	1AG	
				85	108.0	189.0	54.1	134.9	160.3	19.1	43.7	21.8		34.8	19.1	56.6	63.5		
4U1AG8-28 x		1-3/4	28																4U209-28 x
				3.543	4.5	8.13	2.25	5.88	6.75	0.75	1.97	0.99	5/8	1.5	0.75	2.49	2.75	1AH	
				90	114.3	206.5	57.2	149.4	171.5	19.1	50.0	25.1		38.1	19.1	63.2	69.9		
4U1AH8-31 x		1-15/16	31																4U210-31 x
4U1AH8-50M x	50M																		4U210-50M x
4U1AH8-32 x		2	32																4U210-32 x
4U1AI8-32 x		2	32	3.937	4.94	8.88	2.5	6.38	7.5	0.88	1.97	0.99	5/8	1.72	0.87	2.71	3	1AI	4U211-32 x
				100	125.5	225.6	63.5	162.1	190.5	22.4	50.0	25.1		43.7	22.1	68.8	76.2		
4U1AI8-35 x		2-3/16	35																4U211-35 x
				4.331	5.38	9.5	2.75	6.44	8.13	0.88	1.97	0.99	5/8	1.84	1	2.83	3.32	1AJ	
				110	136.7	241.3	69.9	163.6	206.5	22.4	50.0	25.1		46.7	25.4	71.9	84.3		
4U1AJ8-39 x		2-7/16	39																4U212-39 x
				4.921	6.06	10.75	3	7.44	9.13	0.94	1.97	0.99	3/4	1.94	1.19	2.93	4.02	1AK	
				125	153.9	273.1	76.2	189.0	231.9	23.9	50.0	25.1		49.3	30.2	74.4	102.1		
4U1AK8-44 x		2-3/4	44																4U214-44 x
				5.128	6.75	11.75	3.5	8.25	9.75	1	2.47	1.24	7/8	2.15	1.31	3.39	4.02	1AL	
				130	171.5	298.5	88.9	209.6	247.7	25.4	62.7	31.5		54.6	33.3	86.1	102.1		
4U1AL8-47 x		2-15/16	47																4U215-47 x
4U1AL8-75M x	75M																		4U215-75M x
4U1AL8-48 x		3	48																4U215-48 x

X indicates a 2-letter designation for lube & seals
G = food grade grease
F = food grade EPL
Other alpha - refer to page 3
X = standard configuration
O = open (no seal or flinger)
Others - refer to page 3
Example: GX = food grade grease with standard seals & flingers

Stainless Ball Solution®
Pillow Block

CHOICE

Eccentric lock stainless ball bearing Series “4U”
Standard backing height Series “1”
Polymer housing Series “G”



More Sizes / Styles
Inserts pgs F-5 to F-9
Eccentric inserts in SS or KG: pgs F-10 to F-34
QuiKlean® eccentric: pgs F-34 to F-47
Set screw inserts in SS or KG: pgs F-48 to F-72
QuiKlean® set screw: pgs F-72 to F-85

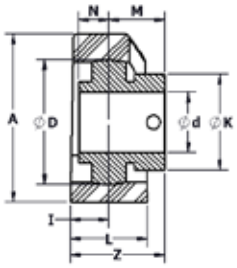

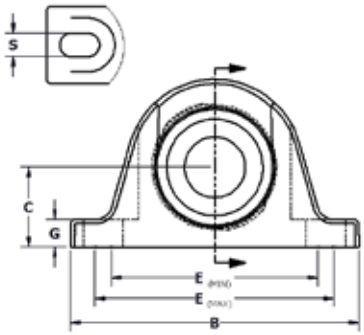

Polymer Housing

“x” indicates a 2-letter designation referring to lube & seals

MOUNTED BEARING PART NUMBER	d			Sphere OD size								Sph. depth	Bolt size			Overall LTB of brg (I+M)	Brg collar size	Housing PN	Ball bearing PN
	mm	in	16th	D	A	B	C	E min	E max	G	L	I	S	M	N	Z	K		WIDE ECC
				1.575	2.25	5	1.06	2.94	4.06	0.44	1.25	0.63	3/8	0.91	0.39	1.54	1.13	1GA	
4U1GA8-08 x		1/2	8	40	57.2	127.0	26.9	74.7	103.1	11.2	31.8	16.0		23.1	9.9	39.1	28.7		4U203-08 x
4U1GA8-10 x		5/8	10																4U203-10 x
				1.850	2.69	5.25	1.31	3.25	4.38	0.5	1.38	0.69	3/8	1.05	0.5	1.74	1.31	1GB	
4U1GB8-08 x		1/2	8	47	68.3	133.4	33.3	82.6	111.3	12.7	35.1	17.5		26.7	12.7	44.2	33.3		4U204-08 x
4U1GB8-10 x		5/8	10																4U204-10 x
4U1GB8-12 x		3/4	12																4U204-12 x
4U1GB8-20M x	20M																		4U204-20M x
				2.047	2.94	5.5	1.44	3.44	4.63	0.56	1.5	0.75	3/8	1.06	0.56	1.81	1.5	1GC	
				52	74.7	139.7	36.6	87.4	117.6	14.2	38.1	19.1		26.9	14.2	46.0	38.1		
4U1GC8-25M x	25M																		4U205-25M x
4U1GC8-16 x		1	16																4U205-16 x
				2.441	3.38	6.25	1.69	4.13	5.13	0.69	1.75	0.88	1/2	1.19	0.63	2.07	1.75	1GD	
				62	85.9	158.8	42.9	104.9	130.3	17.5	44.5	22.4		30.2	16.0	52.6	44.5		
4U1GD8-30M x	30M																		4U206-30M x
4U1GD8-19 x		1-3/16	19																4U206-19 x
4U1GD8-20 x		1-1/4	20																4U206-20 x
				2.835	3.88	6.56	1.88	4.69	5.44	0.69	1.75	0.88	1/2	1.27	0.69	2.15	2.19	1GE	
4U1GE8-20 x		1-1/4	20	72	98.6	166.6	47.8	119.1	138.2	17.5	44.5	22.4		32.3	17.5	54.6	55.6		4U207-20 x
4U1GE8-22 x		1-3/8	22																4U207-22 x
4U1GE8-35M x	35M																		4U207-35M x
4U1GE8-23 x		1-7/16	23																4U207-23 x
				3.150	4.31	7.25	2.13	5	6.13	0.75	1.94	0.97	1/2	1.37	0.75	2.34	2.37	1GF	
4U1GF8-24 x		1-1/2	24	80	109.5	184.2	54.1	127.0	155.7	19.1	49.3	24.6		34.8	19.1	59.4	60.2		4U208-24 x
4U1GF8-40M x	40M																		4U208-40M x
				3.346	4.38	7.44	2.13	5.31	6.31	0.75	2	1	1/2	1.37	0.75	2.37	2.5	1GG	
				85	111.3	189.0	54.1	134.9	160.3	19.1	50.8	25.4		34.8	19.1	60.2	63.5		
4U1GG8-28 x		1-3/4	28																4U209-28 x
				3.543	4.63	8.13	2.25	5.88	6.75	0.75	2.25	1.13	5/8	1.5	0.75	2.63	2.75	1GH	
				90	117.6	206.5	57.2	149.4	171.5	19.1	57.2	28.7		38.1	19.1	66.8	69.9		
4U1GH8-31 x		1-15/16	31																4U210-31 x
4U1GH8-50M x	50M																		4U210-50M x
4U1GH8-32 x		2	32																4U210-32 x
4U1GI8-32 x		2	32	3.937	5.13	8.88	2.5	6.38	7.5	0.88	2.38	1.19	5/8	1.72	0.87	2.91	3	1GI	4U211-32 x
				100	130.3	225.6	63.5	162.1	190.5	22.4	60.5	30.2		43.7	22.1	73.9	76.2		
4U1GI8-35 x		2-3/16	35																4U211-35 x
				4.331	5.5	9.5	2.75	6.44	8.13	0.88	2.5	1.25	5/8	1.84	1	3.09	3.32	1GJ	
				110	139.7	241.3	69.9	163.6	206.5	22.4	63.5	31.8		46.7	25.4	78.5	84.3		
4U1GJ8-39 x		2-7/16	39																4U212-39 x
				4.921	6.25	10.75	3	7.44	9.13	0.94	2.75	1.38	3/4	1.94	1.19	3.32	4.02	1GK	
				125	158.8	273.1	76.2	189.0	231.9	23.9	69.9	35.1		49.3	30.2	84.3	102.1		
4U1GK8-44 x		2-3/4	44																4U214-44 x
				5.128	6.88	11.75	3.5	8.25	9.75	1	2.88	1.44	7/8	2.15	1.31	3.59	4.02	1GL	
				130	174.8	298.5	88.9	209.6	247.7	25.4	73.2	36.6		54.6	33.3	91.2	102.1		
4U1GL8-47 x		2-15/16	47																4U215-47 x
4U1GL8-75M x	75M																		4U215-75M x
4U1GL8-48 x		3	48																4U215-48 x

X indicates a 2-letter designation for lube & seals
G = food grade grease
F = food grade EPL
Other alpha - refer to page 3
X = standard configuration
O = open (no seal or flinger)
Others - refer to page 3
Example: GX = food grade grease with standard seals & flingers

Stainless Ball Solution® Pillow Block

CHOICE

Eccentric lock stainless ball bearing Series “4U”
Low backing height Series “10”
Stainless housing Series “A”



More Sizes / Styles
Inserts pgs F-5 to F-9
Eccentric inserts in SS or KG: pgs F-10 to F-34
QuiKlean® eccentric: pgs F-34 to F-47
Set screw inserts in SS or KG: pgs F-48 to F-72
QuiKlean® set screw: pgs F-72 to F-85

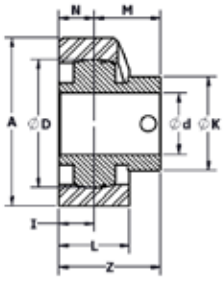

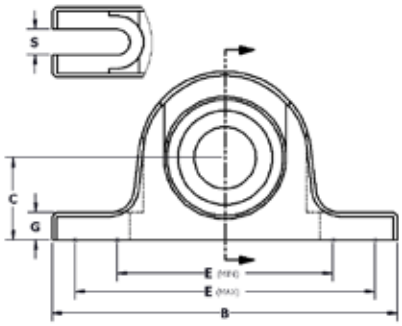

Stainless Housing

“x” indicates a 2-letter designation referring to lube & seals

MOUNTED BEARING PART NUMBER	d			Sphere OD size								Sph depth	Bolt size	Brg c/l to front	Brg c/l to back	Overall LTB of brg (I+M)	Brg collar size	Housing PN	Ball bearing PN
	mm	in	16th	D	A	B	C	E min	E max	G	L	I	S	M	N	Z	K		WIDE ECC
				1.575										0.91	0.39		1.13	10AA	
4U10AA8-08 x		1/2	8	40	0.0	0.0	0.0	0.0	0.0	0.0	0.0	0.0		23.1	9.9	0.0	28.7		4U203-08 x
4U10AA8-10 x		5/8	10																4U203-10 x
				1.850	2.5	5.25	1.25	3.25	4.38	0.44	1.13	0.56	3/8"	1.05	0.5	1.61	1.31	10AB	
4U10AB8-08 x		1/2	8	47	63.5	133.4	31.8	82.6	111.3	11.2	28.7	14.2		26.7	12.7	40.9	33.3		4U204-08 x
4U10AB8-10 x		5/8	10																4U204-10 x
4U10AB8-12 x		3/4	12																4U204-12 x
4U10AB8-20M x	20M																		4U204-20M
				2.047	2.69	5.5	1.31	3.44	4.63	0.44	1.13	0.56	3/8"	1.06	0.56	1.62	1.5	10AC	
				52	68.3	139.7	33.3	87.4	117.6	11.2	28.7	14.2		26.9	14.2	41.1	38.1		
4U10AC8-25M x	25M																		4U205-25M x
4U10AC8-16 x		1	16																4U205-16 x
				2.441	3.13	6.25	1.56	4.13	5.13	0.56	1.47	0.74	1/2"	1.19	0.63	1.93	1.75	10AD	
				62	79.4	158.8	39.6	104.9	130.3	14.2	37.3	18.8		30.2	16.0	49.0	44.5		
4U10AD8-30M x	30M																		4U206-30M x
4U10AD8-19 x		1-3/16	19																4U206-19 x
4U10AD8-20 x		1-1/4	20																4U206-20 x
				2.835	3.69	6.56	1.81	4.69	5.44	0.63	1.47	0.74	1/2"	1.27	0.69	2.01	2.19	10AE	
4U10AE8-20 x		1-1/4	20	72	93.7	166.6	46.0	119.1	138.2	16.0	37.3	18.8		32.3	17.5	51.1	55.6		4U207-20 x
4U10AE8-22 x		1-3/8	22																4U207-22 x
4U10AE8-35M x	35M																		4U207-35M x
4U10AE8-23 x		1-7/16	23																4U207-23 x
				3.150	4	7.25	1.94	5	6.13	0.56	1.625	0.81	1/2"	1.37	0.75	2.18	2.37	10AF	
4U10AF8-24 x		1-1/2	24	80	101.6	184.2	49.3	127.0	155.7	14.2	41.3	20.6		34.8	19.1	55.4	60.2		4U208-24 x
4U10AF8-40M x	40M																		4U208-40M x
				3.346	4.19	7.44	2.06	5.31	6.31	0.69	1.72	0.86	1/2"	1.37	0.75	2.23	2.5	10AG	
				85	106.4	189.0	52.3	134.9	160.3	17.5	43.7	21.8		34.8	19.1	56.6	63.5		
4U10AG8-28 x		1-3/4	28																4U209-28 x
				3.543	4.44	8.13	2.19	5.88	6.75	0.69	1.97	0.99	5/8"	1.5	0.75	2.49	2.75	10AH	
				90	112.8	206.5	55.6	149.4	171.5	17.5	50.0	25.1		38.1	19.1	63.2	69.9		
4U10AH8-31 x		1-15/16	31																4U210-31 x
4U10AH8-50M x	50M																		4U210-50M x
4U10AH8-32 x		2	32																4U210-32 x
4U10AI8-32 x		2	32	3.937	4.88	8.88	2.44	6.38	7.5	0.81	1.97	0.99	5/8"	1.72	0.87	2.71	3	10AI	4U211-32 x
				100	124.0	225.6	62.0	162.1	190.5	20.6	50.0	25.1		43.7	22.1	68.8	76.2		
4U10AI8-35 x		2-3/16	35																4U211-35 x
				4.331	5.31	9.5	2.69	6.44	8.13	0.81	1.97	0.99	5/8"	1.84	1	2.83	3.32	10AJ	
				110	134.9	241.3	68.3	163.6	206.5	20.6	50.0	25.1		46.7	25.4	71.9	84.3		
4U10AJ8-39 x		2-7/16	39																4U212-39 x
				4.921	6.19	10.75	3.13	7.44	9.13	1.06	1.97	0.99	3/4"	1.94	1.19	2.93	4.02	10AK	
				125	157.2	273.1	79.5	189.0	231.9	26.9	50.0	25.1		49.3	30.2	74.4	102.1		
4U10AK8-44 x		2-3/4	44																4U214-44 x
				5.128	6.5	11.75	3.25	8.25	9.75	0.75	2.47	1.24	7/8"	2.15	1.31	3.39	4.02	10AL	
				130	165.1	298.5	82.6	209.6	247.7	19.1	62.7	31.5		54.6	33.3	86.1	102.1		
4U10AL8-47 x		2-15/16	47																4U215-47 x
4U10AL8-75M x	75M																		4U215-75M x
4U10AL8-48 x		3	48																4U215-48 x

X indicates a 2-letter designation for lube & seals
G = food grade grease
F = food grade EPL
Other alpha - refer to page 3
X = standard configuration
O = open (no seal or flinger)
Others - refer to page 3
Example: GX = food grade grease with standard seals & flingers

Stainless Ball Solution® Pillow Block

CHOICE

Eccentric lock stainless ball bearing Series “4U”
Low backing height Series “10”
Polymer housing Series “G”

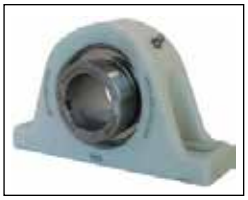

More Sizes / Styles
Inserts pgs F-5 to F-9
Eccentric inserts in SS or KG: pgs F-10 to F-34
QuiKlean® eccentric: pgs F-34 to F-47
Set screw inserts in SS or KG: pgs F-48 to F-72
QuiKlean® set screw: pgs F-72 to F-85

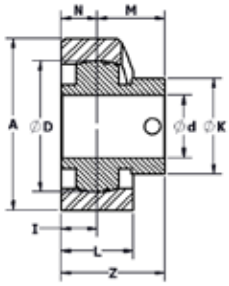

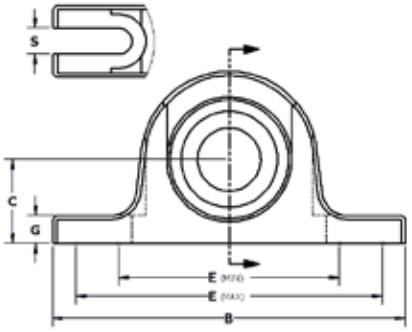

Polymer Housing

“x” indicates a 2-letter designation referring to lube & seals

MOUNTED BEARING PART NUMBER	d			Sphere OD size								Sph depth	Bolt size	Brg c/l to front	Brg c/l to back	Overall LTB of brg (I+M)	Brg collar size	Housing PN	Ball bearing PN
	mm	in	16th	D	A	B	C	E min	E max	G	L	I	S	M	N	Z	K		WIDE ECC
				1.575										0.91	0.39		1.13	10GA	
4U10GA8-08 x		1/2	8	40	0.0	0.0	0.0	0.0	0.0	0.0	0.0	0.0		23.1	9.9	0.0	28.7		4U203-08 x
4U10GA8-10 x		5/8	10																4U203-10 x
				1.850	2.63	5.25	1.25	3.25	4.38	0.44	1.38	0.69	3/8"	1.05	0.5	1.74	1.31	10GB	
4U10GB8-08 x		1/2	8	47	66.7	133.4	31.8	82.6	111.3	11.2	35.1	17.5		26.7	12.7	44.2	33.3		4U204-08 x
4U10GB8-10 x		5/8	10																4U204-10 x
4U10GB8-12 x		3/4	12																4U204-12 x
4U10GB8-20M x	20M																		4U204-20M x
				2.047	2.81	5.5	1.31	3.44	4.63	0.44	1.5	0.75	3/8"	1.06	0.56	1.81	1.5	10GC	
				52	71.4	139.7	33.3	87.4	117.6	11.2	38.1	19.1		26.9	14.2	46.0	38.1		
4U10GC8-25M x	25M																		4U205-25M x
4U10GC8-16 x		1	16																4U205-16 x
				2.441	3.25	6.25	1.56	4.13	5.13	0.56	1.75	0.88	1/2"	1.19	0.63	2.07	1.75	10GD	
				62	82.6	158.8	39.6	104.9	130.3	14.2	44.5	22.4		30.2	16.0	52.6	44.5		
4U10GD8-30M x	30M																		4U206-30M x
4U10GD8-19 x		1-3/16	19																4U206-19 x
4U10GD8-20 x		1-1/4	20																4U206-20 x
				2.835	3.81	6.56	1.81	4.69	5.44	0.63	1.75	0.88	1/2"	1.27	0.69	2.15	2.19	10GE	
4U10GE8-20 x		1-1/4	20	72	96.8	166.6	46.0	119.1	138.2	16.0	44.5	22.4		32.3	17.5	54.6	55.6		4U207-20 x
4U10GE8-22 x		1-3/8	22																4U207-22 x
4U10GE8-35M x	35M																		4U207-35M x
4U10GE8-23 x		1-7/16	23																4U207-23 x
				3.150	4.13	7.25	1.94	5	6.13	0.56	1.94	0.97	1/2"	1.37	0.75	2.34	2.37	10GF	
4U10GF8-24 x		1-1/2	24	80	104.8	184.2	49.3	127.0	155.7	14.2	49.3	24.6		34.8	19.1	59.4	60.2		4U208-24 x
4U10GF8-40M x	40M																		4U208-40M x
				3.346	4.31	7.44	2.06	5.31	6.31	0.69	2	1	1/2"	1.37	0.75	2.37	2.5	10GG	
				85	109.5	189.0	52.3	134.9	160.3	17.5	50.8	25.4		34.8	19.1	60.2	63.5		
4U10GG8-28 x		1-3/4	28																4U209-28 x
				3.543	4.56	8.13	2.19	5.88	6.75	0.69	2.25	1.13	5/8"	1.5	0.75	2.63	2.75	10GH	
				90	115.8	206.5	55.6	149.4	171.5	17.5	57.2	28.6		38.1	19.1	66.7	69.9		
4U10GH8-31 x		1-15/16	31																4U210-31 x
4U10GH8-50M x	50M																		4U210-50M x
4U10GH8-32 x		2	32																4U210-32 x
4U10GI8-32 x		2	32	3.937	5.06	8.88	2.44	6.38	7.5	0.81	2.38	1.19	5/8"	1.72	0.87	2.91	3	10GI	4U211-32 x
				100	128.5	225.6	62.0	162.1	190.5	20.6	60.3	30.2		43.7	22.1	73.9	76.2		
4U10GI8-35 x		2-3/16	35																4U211-35 x
				4.331	5.44	9.5	2.69	6.44	8.13	0.81	2.5	1.25	5/8"	1.84	1	3.09	3.32	10GJ	
				110	138.2	241.3	68.3	163.6	206.5	20.6	63.5	31.8		46.7	25.4	78.5	84.3		
4U10GJ8-39 x		2-7/16	39																4U212-39 x
				4.921	6.38	10.75	3.13	7.44	9.13	1.06	2.75	1.38	3/4"	1.94	1.19	3.32	4.02	10GK	
				125	161.9	273.1	79.5	189.0	231.9	26.9	69.9	34.9		49.3	30.2	84.2	102.1		
4U10GK8-44 x		2-3/4	44																4U214-44 x
				5.128	6.63	11.75	3.25	8.25	9.75	0.75	2.87	1.44	7/8"	2.15	1.31	3.59	4.02	10GL	
				130	168.3	298.5	82.6	209.6	247.7	19.1	72.9	36.6		54.6	33.3	91.2	102.1		
4U10GL8-47 x		2-15/16	47																4U215-47 x
4U10GL8-75M x	75M																		4U215-75M x
4U10GL8-48 x		3	48																4U215-48 x

X indicates a 2-letter designation for lube & seals
G = food grade grease
F = food grade EPL
Other alpha - refer to page 3
X = standard configuration
O = open (no seal or flinger)
Others - refer to page 3
Example: GX = food grade grease with standard seals & flingers

Stainless Ball Solution®
Tapped Base Pillow Block

CHOICE

Eccentric lock stainless ball bearing Series “4U”
Tapped base housing Series “9”
Stainless housing Series “A”



More Sizes / Styles
Inserts pgs F-5 to F-9
Eccentric inserts in SS or KG: pgs F-10 to F-34
QuiKlean® eccentric: pgs F-34 to F-47
Set screw inserts in SS or KG: pgs F-48 to F-72
QuiKlean® set screw: pgs F-72 to F-85

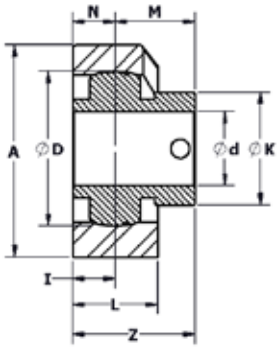

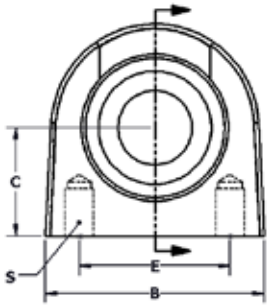

Stainless Housing

“x” indicates a 2-letter designation referring to lube & seals

MOUNTED BEARING PART NUMBER	d			Sphere OD size						Sph depth	Bolt size	Brg c/l to front	Brg c/l to back	Overall LTB of brg (I+M)	Brg collar size	Housing PN	Ball bearing PN
	mm	in	16th	D	A	B	C	E	L	I	S	M	N	Z	K		WIDE ECC
				1.575	2.41	2.88	1.31	2	1.13	0.56	3/8-16	0.91	0.39	1.47	1.13	9AA	
4U9AA8-08 x		1/2	8	40	61.2	73.2	33.3	50.8	28.7	14.2		23.1	9.9	37.3	28.7		4U203-08 x
4U9AA8-10 x		5/8	10														4U203-10 x
				1.850	2.53	2.88	1.31	2	1.13	0.56	3/8-16	1.05	0.5	1.61	1.31	9AB	
4U9AB8-08 x		1/2	8	47	64.3	73.2	33.3	50.8	28.7	14.2		26.7	12.7	40.9	33.3		4U204-08 x
4U9AB8-10 x		5/8	10														4U204-10 x
4U9AB8-12 x		3/4	12														4U204-12 x
4U9AB8-20M x	20M																4U204-20M x
				2.047	2.81	3	1.44	2	1.13	0.56	3/8-16	1.06	0.56	1.62	1.5	9AC	
				52	71.4	76.2	36.6	50.8	28.7	14.2		26.9	14.2	41.1	38.1		
4U9AC8-25M x	25M																4U205-25M x
4U9AC8-16 x		1	16														4U205-16 x
				2.441	3.25	4	1.69	3	1.47	0.74	7/16-14	1.19	0.63	1.93	1.75	9AD	
				62	82.6	101.6	42.9	76.2	37.3	18.8		30.2	16.0	49.0	44.5		
4U9AD8-30M x	30M																4U206-30M x
4U9AD8-19 x		1-3/16	19														4U206-19 x
4U9AD8-20 x		1-1/4	20														4U206-20 x
				2.835	3.69	4.25	1.88	3.25	1.47	0.74	1/2-13	1.27	0.69	2.01	2.19	9AE	
4U9AE8-20 x		1-1/4	20	72	93.7	108.0	47.8	82.6	37.3	18.8		32.3	17.5	51.1	55.6		4U207-20 x
4U9AE8-22 x		1-3/8	22														4U207-22 x
4U9AE8-35M x	35M																4U207-35M x
4U9AE8-23 x		1-7/16	23														4U207-23 x
				3.150	3.94	4.63	1.94	3.5	1.63	0.81	1/2-13	1.37	0.75	2.18	2.37	9AF	
4U9AF8-24 x		1-1/2	24	80	100.1	117.6	49.3	88.9	41.4	20.6		34.8	19.1	55.4	60.2		4U208-24 x
4U9AF8-40M x	40M																4U208-40M x
				3.346	4.25	5	2.125	3.75	1.72	0.86	1/2-13	1.37	0.75	2.23	2.5	9AG	
				85	108.0	127.0	54.0	95.3	43.7	21.8		34.8	19.1	56.6	63.5		
4U9AG8-28 x		1-3/4	28														4U209-28 x
				3.543	4.5	5.5	2.25	4	1.97	0.99	5/8-11	1.5	0.75	2.49	2.75	9AH	
				90	114.3	139.7	57.2	101.6	50.0	25.1		38.1	19.1	63.2	69.9		
4U9AH8-31 x		1-15/16	31														4U210-31 x
4U9AH8-50M x	50M																4U210-50M x
4U9AH8-32 x		2	32														4U210-32 x
4U9AI8-32 x		2	32	3.937	4.72	5.5	2.25	4	1.97	0.99	5/8-11	1.72	0.87	2.71	3	9AI	4U211-32 x
				100	119.9	139.7	57.2	101.6	50.0	25.1		43.7	22.1	68.8	76.2		
4U9AI8-35 x		2-3/16	35														4U211-35 x
				4.331	5.38	6	2.75	4.25	1.97	0.99	5/8-11	1.84	1	2.83	3.32	9AJ	
				110	136.5	152.4	69.9	108.0	50.0	25.1		46.7	25.4	71.9	84.3		
4U9AJ8-39 x		2-7/16	39														4U212-39 x
				4.921	6.06	7	3	5	1.97	0.99	3/4-10	1.94	1.19	2.93	4.02	9AK	
				125	154.0	177.8	76.2	127.0	50.0	25.1		49.3	30.2	74.4	102.1		
4U9AK8-44 x		2-3/4	44														4U214-44 x
				5.128	6.75	7.5	3.5	5.25	1.97	0.99	7/8-9	2.15	1.31	3.14	4.02	9AL	
				130	171.5	190.5	88.9	133.4	50.0	25.1		54.6	33.3	79.8	102.1		
4U9AL8-47 x		2-15/16	47														4U215-47 x
4U9AL8-75M x	75M																4U215-75M x
4U9AL8-48 x		3	48														4U215-48 x

X indicates a 2-letter designation for lube & seals
G = food grade grease
F = food grade EPL
Other alpha - refer to page 3
X = standard configuration
O = open (no seal or flinger)
Others - refer to page 3
Example: GX = food grade grease with standard seals & flingers

Stainless Ball Solution®
Tapped Base Pillow Block

CHOICE

Eccentric lock stainless ball bearing Series "4U"
Tapped base housing Series "9"
Polymer housing Series "G"



More Sizes / Styles
Inserts pgs F-5 to F-9
Eccentric inserts in SS or KG: pgs F-10 to F-34
QuiKlean® eccentric: pgs F-34 to F-47
Set screw inserts in SS or KG: pgs F-48 to F-72
QuiKlean® set screw: pgs F-72 to F-85

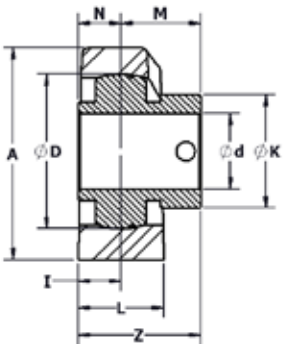

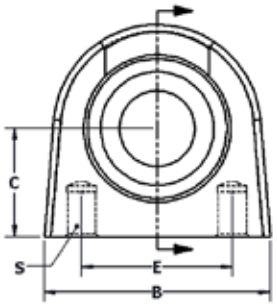

Polymer Housing

"x" indicates a 2-letter designation referring to lube & seals

MOUNTED BEARING PART NUMBER	d			Sphere OD size						Sph depth	Bolt size	Brg c/l to front	Brg c/l to back	Overall LTB of brg (I+M)	Brg collar size	Housing PN	Ball bearing PN
	mm	in	16th	D	A	B	C	E	L	I	S	M	N	Z	K		WIDE ECC
				1.575	2.46	2.94	1.31	2	1.12	0.56	3/8-16	0.91	0.39	1.47	1.13	9GA	
4U9GA8-08 x		1/2	8	40	62.5	74.7	33.3	50.8	28.4	14.2		23.1	9.9	37.3	28.7		4U203-08 x
4U9GA8-10 x		5/8	10														4U203-10 x
				1.850	2.58	2.96	1.31	2	1.13	0.56	3/8-16	1.05	0.5	1.61	1.31	9GB	
4U9GB8-08 x		1/2	8	47	65.5	75.2	33.3	50.8	28.7	14.2		26.7	12.7	40.9	33.3		4U204-08 x
4U9GB8-10 x		5/8	10														4U204-10 x
4U9GB8-12 x		3/4	12														4U204-12 x
4U9GB8-20M x	20M																4U204-20M x
				2.047	2.81	3	1.44	2	1.14	0.57	3/8-16	1.06	0.56	1.63	1.5	9GC	
				52	71.4	76.2	36.6	50.8	29.0	14.5		26.9	14.2	41.4	38.1		
4U9GC8-25M x	25M																4U205-25M x
4U9GC8-16 x		1	16														4U205-16 x
				2.441	3.38	4.25	1.69	3	1.63	0.81	7/16-14	1.19	0.63	2.00	1.75	9GD	
				62	85.9	108.0	42.9	76.2	41.4	20.6		30.2	16.0	50.8	44.5		
4U9GD8-30M x	30M																4U206-30M x
4U9GD8-19 x		1-3/16	19														4U206-19 x
4U9GD8-20 x		1-1/4	20														4U206-20 x
				2.835	3.88	4.5	1.88	3.25	1.75	0.88	1/2-13	1.27	0.69	2.15	2.19	9GE	
4U9GE8-20 x		1-1/4	20	72	98.6	114.3	47.8	82.6	44.5	22.4		32.3	17.5	54.6	55.6		4U207-20 x
4U9GE8-22 x		1-3/8	22														4U207-22 x
4U9GE8-35M x	35M																4U207-35M x
4U9GE8-23 x		1-7/16	23														4U207-23 x
				3.150	4.13	4.75	1.94	3.5	1.88	0.94	1/2-13	1.37	0.75	2.31	2.37	9GF	
4U9GF8-24 x		1-1/2	24	80	104.8	120.7	49.3	88.9	47.8	23.9		34.8	19.1	58.7	60.2		4U208-24 x
4U9GF8-40M x	40M																4U208-40M x
				3.346	4.38	5.25	2.125	3.75	1.97	0.98	1/2-13	1.37	0.75	2.35	2.5	9GG	
				85	111.3	133.4	54.0	95.3	50.0	24.9		34.8	19.1	59.7	63.5		
4U9GG8-28 x		1-3/4	28														4U209-28 x
				3.543	4.75	5.75	2.25	4	2.13	1.06	5/8-11	1.5	0.75	2.56	2.75	9GH	
				90	120.7	146.1	57.2	101.6	54.1	26.9		38.1	19.1	65.0	69.9		
4U9GH8-31 x		1-15/16	31														4U210-31 x
4U9GH8-50M x	50M																4U210-50M x
4U9GH8-32 x		2	32														4U210-32 x
4U9GI8-32 x		2	32	3.937	4.88	5.75	2.25	4	2.31	1.16	5/8-11	1.72	0.87	2.88	3	9GI	4U211-32 x
				100	124.0	146.1	57.2	101.6	58.7	29.5		43.7	22.1	73.2	76.2		
4U9GI8-35 x		2-3/16	35														4U211-35 x
				4.331	5.75	6.5	2.75	4.25	2.44	1.22	5/8-11	1.84	1	3.06	3.32	9GJ	
				110	146.1	165.1	69.9	108.0	62.0	31.0		46.7	25.4	77.7	84.3		
4U9GJ8-39 x		2-7/16	39														4U212-39 x
				4.921	6.38	7.5	3	5	2.5	1.25	3/4-10	1.94	1.19	3.19	4.02	9GK	
				125	162.1	190.5	76.2	127.0	63.5	31.8		49.3	30.2	81.0	102.1		
4U9GK8-44 x		2-3/4	44														4U214-44 x
				5.128	7	8	3.5	5.25	2.88	1.44	3/4-10	2.15	1.31	3.59	4.02	9GL	
				130	177.8	203.2	88.9	133.4	73.2	36.6		54.6	33.3	91.2	102.1		
4U9GL8-47 x		2-15/16	47														4U215-47 x
4U9GL8-75M x	75M																4U215-75M x
4U9GL8-48 x		3	48														4U215-48 x

X indicates a 2-letter designation for lube & seals

G = food grade grease
F = food grade EPL
Other alpha - refer to page 3
X = standard configuration
O = open (no seal or flinger)
Others - refer to page 3

Example: GX = food grade grease with standard seals & flingers

Stainless Ball Solution®
Two-Bolt Flange

CHOICE

Eccentric lock stainless ball bearing Series “4U”
Standard two-bolt pattern Series “2”
Stainless housing Series “A”

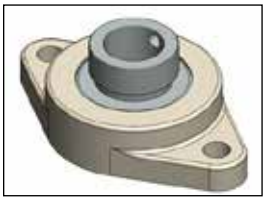

More Sizes / Styles
Inserts pgs F-5 to F-9
Eccentric inserts in SS or KG: pgs F-10 to F-34
QuiKlean® eccentric: pgs F-34 to F-47
Set screw inserts in SS or KG: pgs F-48 to F-72
QuiKlean® set screw: pgs F-72 to F-85

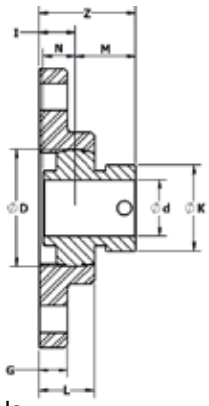

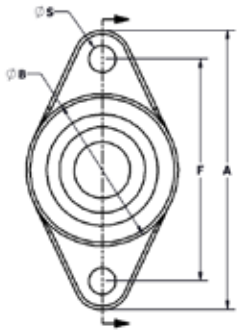

Stainless Housing

“x” indicates a 2-letter designation referring to lube & seals

MOUNTED BEARING PART NUMBER	d			Sphere OD size							Bolt size	Brg c/l to front	Brg c/l to back	Overall LTB of brg + hsg (I+M)	Brg collar size	Housing PN	Ball bearing PN
	mm	in	16th	D	A	B	F	G	L	I	S	M	N	Z	K		WIDE ECC
				1.575	3.88	2.15	3	0.44	0.85	0.53	3/8"	0.91	0.39	1.44	1.13	2AA	
4U2AA8-08 x		1/2	8	40	98.6	54.6	76.2	11.2	21.6	13.5		23.1	9.9	36.6	28.7		4U203-08 x
4U2AA8-10 x		5/8	10														4U203-10 x
				1.850	4.41	2.42	3.53	0.44	0.95	0.59	3/8"	1.05	0.5	1.64	1.31	2AB	
4U2AB8-08 x		1/2	8	47	112.0	61.5	89.7	11.2	24.1	15.0		26.7	12.7	41.7	33.3		4U204-08 x
4U2AB8-10 x		5/8	10														4U204-10x
4U2AB8-12 x		3/4	12														4U204-12 x
4U2AB8-20M x	20M																4U204-20M x
				2.047	4.89	2.66	3.89	0.5	0.97	0.63	7/16"	1.06	0.56	1.69	1.5	2AC	
				52	124.2	67.6	98.8	12.7	24.6	16.0		26.9	14.2	42.9	38.1		
4U2AC8-25M x	25M																4U205-25M x
4U2AC8-16 x		1	16														4U205-16 x
				2.441	5.59	3.12	4.6	0.5	1.07	0.66	7/16"	1.19	0.63	1.85	1.75	2AD	
				62	142.0	79.2	116.8	12.7	27.2	16.8		30.2	16.0	47.0	44.5		
4U2AD8-30M x	30M																4U206-30M x
4U2AD8-19 x		1-3/16	19														4U206-19 x
4U2AD8-20 x		1-1/4	20														4U206-20 x
				2.835	6.25	3.62	5.12	0.56	1.22	0.79	1/2"	1.27	0.69	2.06	2.19	2AE	
4U2AE8-20 x		1-1/4	20	72	158.8	91.9	130.0	14.2	31.0	20.1		32.3	17.5	52.3	55.6		4U207-20 x
4U2AE8-22 x		1-3/8	22														4U207-22 x
4U2AE8-35M x	35M																4U207-35M x
4U2AE8-23 x		1-7/16	23														4U207-23 x
				3.150	6.78	4	5.66	0.56	1.24	0.77	1/2"	1.37	0.75	2.14	2.37	2AF	
4U2AF8-24 x		1-1/2	24	80	172.2	101.6	143.8	14.2	31.5	19.6		34.8	19.1	54.4	60.2		4U208-24 x
4U2AF8-40M x	40M																4U208-40M x
				3.346	6.97	4.25	5.84	0.63	1.24	0.76	1/2"	1.37	0.75	2.13	2.5	2AG	
				85	177.0	108.0	148.3	16.0	31.5	19.3		34.8	19.1	54.1	63.5		
4U2AG8-28 x		1-3/4	28														4U209-28 x
				3.543	7.31	4.56	6.19	0.63	1.24	0.77	1/2"	1.5	0.75	2.27	2.75	2AH	
				90	185.7	115.8	157.2	16.0	31.5	19.6		38.1	19.1	57.7	69.9		
4U2AH8-31 x		1-15/16	31														4U210-31 x
4U2AH8-50M x	50M																4U210-50M x
4U2AH8-32 x		2	32														4U210-32 x
4U2AI8-32 x		2	32	3.937	8.63	5.06	7.25	0.69	1.47	0.92	5/8"	1.72	0.87	2.64	3	2AI	4U211-32 x
				100	219.2	128.5	184.2	17.5	37.3	23.4		43.7	22.1	67.1	76.2		
4U2AI8-35 x		2-3/16	35														4U211-35 x
				4.331	9.33	5.62	7.95	0.69	1.66	1.07	5/8"	1.84	1	2.91	3.32	2AJ	
				110	237.0	142.7	201.9	17.5	42.2	27.2		46.7	25.4	73.9	84.3		
4U2AJ8-39 x		2-7/16	39														4U212-39 x
				4.921	9.69	6.44	8.31	0.75	1.86	1.25	5/8"	1.94	1.19	3.19	4.02	2AK	
				125	246.1	163.6	211.1	19.1	47.2	31.8		49.3	30.2	81.0	102.1		
4U2AK8-44 x		2-3/4	44														4U214-44 x
				5.128	10.13	6.5	8.5	1	1.98	1.39	3/4"	2.15	1.31	3.54	4.02	2AL	
				130	257.3	165.1	215.9	25.4	50.3	35.3		54.6	33.3	89.9	102.1		
4U2AL8-47 x		2-15/16	47														4U215-47 x
4U2AL8-75M x	75M																4U215-75M x
4U2AL8-48 x		3	48														4U215-48 x

X indicates a 2-letter designation for lube & seals
G = food grade grease
F = food grade EPL
Other alpha - refer to page 3
X = standard configuration
O = open (no seal or flinger)
Others - refer to page 3
Example: GX = food grade grease with standard seals & flingers

Stainless Ball Solution®
Two-Bolt Flange

CHOICE

Eccentric lock stainless ball bearing Series “4U”
Standard two-bolt pattern Series “2”
Polymer housing Series “G”



More Sizes / Styles
Inserts pgs F-5 to F-9
Eccentric inserts in SS or KG: pgs F-10 to F-34
QuiKlean® eccentric: pgs F-34 to F-47
Set screw inserts in SS or KG: pgs F-48 to F-72
QuiKlean® set screw: pgs F-72 to F-85

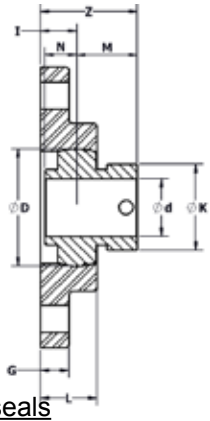

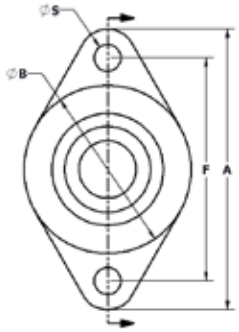

Polymer Housing

“x” indicates a 2-letter designation referring to lube & seals

MOUNTED BEARING PART NUMBER	d			Sphere OD size						Sph depth	Bolt size	Brg c/l to front	Brg c/l to back	Overall LTB of brg (I+M)	Brg collar size	Housing PN	Ball bearing PN
	mm	in	16th	D	A	B	F	G	L	I	S	M	N	Z	K		WIDE ECC
				1.575	3.88	2.15	3	0.44	0.85	0.53	3/8"	0.91	0.39	1.44	1.13	2GA	
4U2GA8-08 x		1/2	8	40	98.6	54.6	76.2	11.2	21.6	13.5		23.1	9.9	36.6	28.7		4U203-08 x
4U2GA8-10 x		5/8	10														4U203-10 x
				1.850	4.41	2.69	3.53	0.44	0.95	0.59	3/8"	1.05	0.5	1.64	1.31	2GB	
4U2GB8-08 x		1/2	8	47	112.0	68.3	89.7	11.2	24.1	15.0		26.7	12.7	41.7	33.3		4U204-08 x
4U2GB8-10 x		5/8	10														4U204-10 x
4U2GB8-12 x		3/4	12														4U204-12 x
4U2GB8-20M x	20M																4U204-20M x
				2.047	4.77	2.93	3.89	0.5	0.99	0.63	7/16"	1.06	0.56	1.69	1.5	2GC	
				52	121.2	74.4	98.8	12.7	25.1	16.0		26.9	14.2	42.9	38.1		
4U2GC8-25M x	25M																4U205-25M x
4U2GC8-16 x		1	16														4U205-16 x
				2.441	5.72	3.625	4.59	0.5	1.07	0.66	7/16"	1.19	0.63	1.85	1.75	2GD	
				62	145.3	92.1	116.6	12.7	27.2	16.8		30.2	16.0	47.0	44.5		
4U2GD8-30M x	30M																4U206-30M x
4U2GD8-19 x		1-3/16	19														4U206-19 x
4U2GD8-20 x		1-1/4	20														4U206-20 x
				2.835	6.25	4	5.12	0.56	1.22	0.79	1/2"	1.27	0.69	2.06	2.19	2GE	
4U2GE8-20 x		1-1/4	20	72	158.8	101.6	130.0	14.2	31.0	20.1		32.3	17.5	52.3	55.6		4U207-20 x
4U2GE8-22 x		1-3/8	22														4U207-22 x
4U2GE8-35M x	35M																4U207-35M x
4U2GE8-23 x		1-7/16	23														4U207-23 x
				3.150	6.78	4.56	5.66	0.56	1.24	0.77	1/2"	1.37	0.75	2.14	2.37	2GF	
4U2GF8-24 x		1-1/2	24	80	172.2	115.8	143.8	14.2	31.5	19.6		34.8	19.1	54.4	60.2		4U208-24 x
4U2GF8-40M x	40M																4U208-40M x
				3.346	6.97	4.74	5.84	0.63	1.24	0.76	1/2"	1.37	0.75	2.13	2.5	2GG	
				85	177.0	120.4	148.3	16.0	31.5	19.3		34.8	19.1	54.1	63.5		
4U2GG8-28 x		1-3/4	28														4U209-28 x
				3.543	7.31	5.06	6.19	0.63	1.24	0.77	1/2"	1.5	0.75	2.27	2.75	2GH	
				90	185.7	128.5	157.2	16.0	31.5	19.6		38.1	19.1	57.7	69.9		
4U2GH8-31 x		1-15/16	31														4U210-31 x
4U2GH8-50M x	50M																4U210-50M x
4U2GH8-32 x		2	32														4U210-32 x
4U2GI8-32 x		2	32	3.937	8.63	5.87	7.25	0.69	1.47	0.92	5/8"	1.72	0.87	2.64	3	2GI	4U211-32 x
				100	219.2	149.1	184.2	17.5	37.3	23.4		43.7	22.1	67.1	76.2		
4U2GI8-35 x		2-3/16	35														4U211-35 x
				4.331	9.33	6.56	7.95	0.69	1.66	1.07	5/8"	1.84	1	2.91	3.32	2GJ	
				110	237.0	166.6	201.9	17.5	42.2	27.2		46.7	25.4	73.9	84.3		
4U2GJ8-39 x		2-7/16	39														4U212-39 x
				4.921	9.69	6.94	8.31	0.75	1.86	1.25	5/8"	1.94	1.19	3.19	4.02	2GK	
				125	246.1	176.3	211.1	19.1	47.2	31.8		49.3	30.2	81.0	102.1		
4U2GK8-44 x		2-3/4	44														4U214-44 x
				5.128	10.13	6.94	8.5	1	1.98	1.39	3/4"	2.15	1.31	3.54	4.02	2GL	
				130	257.3	176.3	215.9	25.4	50.3	35.3		54.6	33.3	89.9	102.1		
4U2GL8-47 x		2-15/16	47														4U215-47 x
4U2GL8-75M x	75M																4U215-75M x
4U2GL8-48 x		3	48														4U215-48 x

X indicates a 2-letter designation for lube & seals
G = food grade grease
F = food grade EPL
Other alpha - refer to page 3
X = standard configuration
O = open (no seal or flinger)
Others - refer to page 3
Example: GX = food grade grease with standard seals & flingers

Stainless Ball Solution®
Small Two-Bolt Flange

CHOICE

Eccentric lock stainless ball bearing Series “4U”
Small two-bolt pattern Series “6”
Stainless housing Series “A”



More Sizes / Styles
Inserts pgs F-5 to F-9
Eccentric inserts in SS or KG: pgs F-10 to F-34
QuiKlean® eccentric: pgs F-34 to F-47
Set screw inserts in SS or KG: pgs F-48 to F-72
QuiKlean® set screw: pgs F-72 to F-85

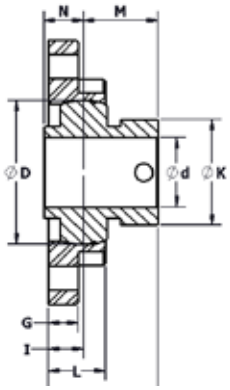

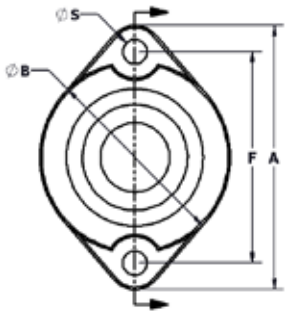

Stainless Housing

“x” indicates a 2-letter designation referring to lube & seals

MOUNTED BEARING PART NUMBER	d			Sphere OD size						Sph depth	Bolt size	Brg c/l to front	Brg c/l to back	Overall LTB of brg (I+M)	Brg collar size	Housing PN	Ball bearing PN
	mm	in	16th	D	A	B	F	G	L	I	S	M	N	Z	K		WIDE ECC
				1.575	3.19	2.09	2.5	0.38	0.7	0.42	1/4	0.91	0.39	1.33	1.13	6AA	
4U6AA8-08 x		1/2	8	40	81.0	53.1	63.5	9.7	17.8	10.7		23.1	9.9	33.8	28.7		4U203-08 x
4U6AA8-10 x		5/8	10														4U203-10 x
				1.850	3.56	2.42	2.81	0.42	0.86	0.5	5/16	1.05	0.5	1.55	1.31	6AB	
4U6AB8-08 x		1/2	8	47	90.4	61.5	71.4	10.7	21.8	12.7		26.7	12.7	39.4	33.3		4U204-08 x
4U6AB8-10 x		5/8	10														4U204-10 x
4U6AB8-12 x		3/4	12														4U204-12 x
4U6AB8-20M x	20M																4U204-20M x
				2.047	3.75	2.72	3	0.42	0.81	0.5	5/16	1.06	0.56	1.56	1.5	6AC	
				52	95.3	69.1	76.2	10.7	20.6	12.7		26.9	14.2	39.6	38.1		
4U6AC8-25M x	25M																4U205-25M x
4U6AC8-16 x		1	16														4U205-16 x
				2.441	4.44	3.09	3.56	0.47	0.96	0.56	3/8	1.19	0.63	1.75	1.75	6AD	
				62	112.8	78.5	90.4	11.9	24.4	14.2		30.2	16.0	44.5	44.5		
4U6AD8-30M x	30M																4U206-30M x
4U6AD8-19 x		1-3/16	19														4U206-19 x
4U6AD8-20 x		1-1/4	20														4U206-20 x
				2.835	4.94	3.5	3.94	0.5	0.96	0.56	3/8	1.27	0.69	1.83	2.19	6AE	
4U6AE8-20 x		1-1/4	20	72	125.5	88.9	100.1	12.7	24.4	14.2		32.3	17.5	46.5	55.6		4U207-20 x
4U6AE8-22 x		1-3/8	22														4U207-22 x
4U6AE8-35M x	35M																4U207-35M x
4U6AE8-23 x		1-7/16	23														4U207-23 x

X indicates a 2-letter designation for lube & seals
G = food grade grease
F = food grade EPL
Other alpha - refer to page 3
X = standard configuration
O = open (no seal or flinger)
Others - refer to page 3
Example: GX = food grade grease with standard seals & flingers

Stainless Ball Solution®
Small Two-Bolt Flange

CHOICE

Eccentric lock stainless ball bearing Series “4U”
Small two-bolt pattern Series “6”
Polymer housing Series “G”

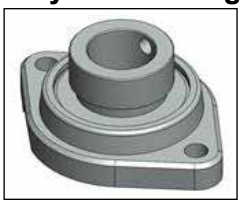

More Sizes / Styles
Inserts pgs F-5 to F-9
Eccentric inserts in SS or KG: pgs F-10 to F-34
QuiKlean® eccentric: pgs F-34 to F-47
Set screw inserts in SS or KG: pgs F-48 to F-72
QuiKlean® set screw: pgs F-72 to F-85

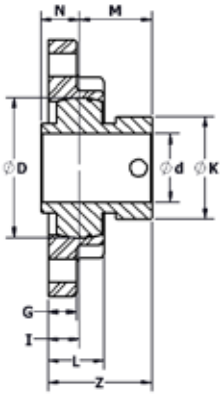

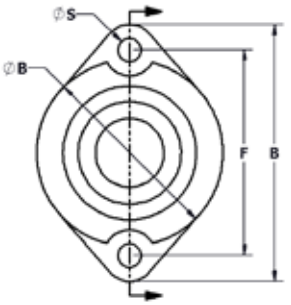

Polymer Housing

“x” indicates a 2-letter designation referring to lube & seals

MOUNTED BEARING PART NUMBER	d			Sphere OD size						Sph depth	Bolt size	Brg c/l to front	Brg c/l to back	Overall LTB of brg (I+M)	Brg collar size	Housing PN	Ball bearing PN
	mm	in	16th	D	A	B	F	G	L	I	S	M	N	Z	K		WIDE ECC
				1.575	3.19	2.09	2.5	0.38	0.7	0.42	1/4	0.91	0.39	1.33	1.13	6GA	
4U6GA8-08 x		1/2	8	40	81.0	53.1	63.5	9.7	17.8	10.7		23.1	9.9	33.8	28.7		4U203-08 x
4U6GA8-10 x		5/8	10														4U203-10 x
				1.850	3.56	2.42	2.81	0.42	0.86	0.5	5/16	1.05	0.5	1.55	1.31	6GB	
4U6GB8-08 x		1/2	8	47	90.4	61.5	71.4	10.7	21.8	12.7		26.7	12.7	39.4	33.3		4U204-08 x
4U6GB8-10 x		5/8	10														4U204-10 x
4U6GB8-12 x		3/4	12														4U204-12 x
4U6GB8-20M x	20M																4U204-20M x
				2.047	3.75	2.72	3	0.42	0.81	0.46	5/16	1.06	0.56	1.52	1.5	6GC	
				52	95.3	69.1	76.2	10.7	20.6	11.7		26.9	14.2	38.6	38.1		
4U6GC8-25M x	25M																4U205-25M x
4U6GC8-16 x		1	16														4U205-16 x
				2.441	4.44	3.09	3.56	0.47	0.96	0.56	3/8	1.19	0.63	1.75	1.75	6GD	
				62	112.8	78.5	90.4	11.9	24.4	14.2		30.2	16.0	44.5	44.5		
4U6GD8-30M x	30M																4U206-30M x
4U6GD8-19 x		1-3/16	19														4U206-19 x
4U6GD8-20 x		1-1/4	20														4U206-20 x
				2.835	4.94	3.5	3.94	0.5	0.96	0.56	3/8	1.27	0.69	1.83	2.19	6GE	
4U6GE8-20 x		1-1/4	20	72	125.5	88.9	100.1	12.7	24.4	14.2		32.3	17.5	46.5	55.6		4U207-20 x
4U6GE8-22 x		1-3/8	22														4U207-22 x
4U6GE8-35M x	35M																4U207-35M x
4U6GE8-23 x		1-7/16	23														4U207-23 x

X indicates a 2-letter designation for lube & seals

G = food grade grease
F = food grade EPL
Other alpha - refer to page 3
X = standard configuration
O = open (no seal or flinger)
Others - refer to page 3

Example: GX = food grade grease with standard seals & flingers

Stainless Ball Solution® Piloted Two-Bolt Flange

CHOICE

Eccentric lock stainless ball bearing Series “4U”
Standard two-bolt pattern Series “6_-SP”
Stainless housing Series “A”



More Sizes / Styles
Inserts pgs F-5 to F-9
Eccentric inserts in SS or KG: pgs F-10 to F-34
QuiKlean® eccentric: pgs F-34 to F-47
Set screw inserts in SS or KG: pgs F-48 to F-72
QuiKlean® set screw: pgs F-72 to F-85

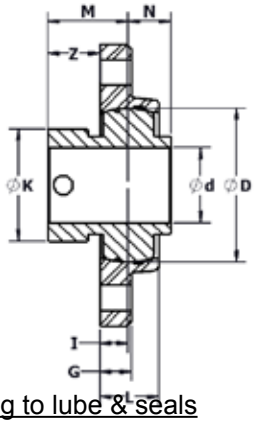

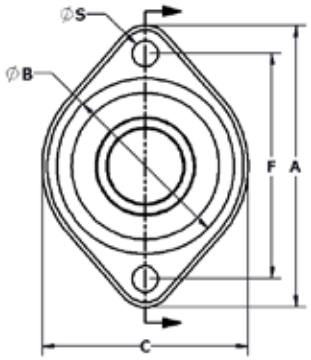

“x” indicates a 2-letter designation referring to lube & seals

Stainless Housing

MOUNTED BEARING PART NUMBER	d			Sphere OD size		Boss Dia					Sph depth	Bolt size	Brg c/l to front	Brg c/l to back	Overall LTB of brg (1+M)	Brg collar size	Housing PN	Ball bearing PN
	mm	in	16th	D	A	B	C	F	G	L	I	S	M	N	Z	K		WIDE ECC
				1.850	3.56	2.12	2.5	2.81	0.35	0.73	0.35	5/16	1.05	0.5	1.40	1.31	6AB-SP	
4U6AB-SP8-08 x		1/2	8	47	90.4	53.8	63.5	71.4	8.9	18.5	8.9		26.7	12.7	35.6	33.3		4U204-08 x
4U6AB-SP8-10 x		5/8	10															4U204-10 x
4U6AB-SP8-12 x		3/4	12															4U204-12 x
4U6AB-SP8-20M x	20M																	4U204-20M x
				2.047	3.75	2.34	2.72	3	0.42	0.78	0.38	5/16	1.06	0.56	1.44	1.5	6AC-SP	
				52	95.3	59.4	69.1	76.2	10.7	19.8	9.5		26.9	14.2	36.4	38.1		
4U6AC-SP8-25M x	25M																	4U205-25M x
4U6AC-SP8-16 x		1	16															4U205-16x

X indicates a 2-letter designation for lube & seals

G = food grade grease
F = food grade EPL
Other alpha - refer to page 3
X = standard configuration
O = open (no seal or flinger)
Others - refer to page 3

Example: GX = food grade grease with standard seals & flingers

Stainless Ball Solution® Hanger Bearing

CHOICE

Eccentric lock stainless ball bearing Series “4U”
Hanger pattern Series “8”
Stainless housing Series “A”



More Sizes / Styles
Inserts pgs F-5 to F-9
Eccentric inserts in SS or KG: pgs F-10 to F-34
QuiKlean® eccentric: pgs F-34 to F-47
Set screw inserts in SS or KG: pgs F-48 to F-72
QuiKlean® set screw: pgs F-72 to F-85

“x” indicates a 2-letter designation referring to lube & seals

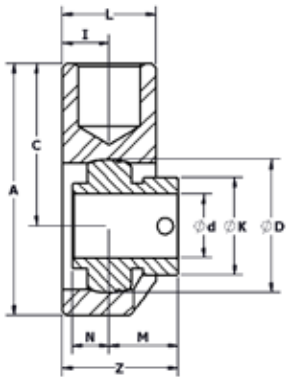

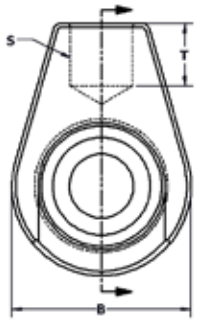

Stainless Housing

MOUNTED BEARING PART NUMBER	d			Sphere OD size						Thread size		Brg c/l to front	Brg c/l to back	Overall LTB of brg (I+M)	Brg collar size	Housing PN	Ball bearing PN
	mm	in	16th	D	A	B	C	L	I	S	T	M	N	Z	K		WIDE ECC
				1.575	2.94	2.13	1.88	1.19	0.59	1/2 - 14 NPSM	0.63	0.91	0.39	1.50	1.13	8AA	
4U8AA8-08 x		1/2	8	40	74.7	54.1	47.8	30.2	15.0	5/8 - 11 UNC	16.0	23.1	9.9	38.1	28.7	8AA-01	4U203-08 x
										M12 - 1.75						8AA-03B	
										5/8 - 18						8AA-01A	
4U8AA8-10 x		5/8	10														4U203-10 x
				1.850	3.75	2.5	2.5	1.44	0.72	3/4 - 14 NPSM	0.75	1.05	0.5	1.77	1.31	8AB	
4U8AB8-08 x		1/2	8	47	95.3	63.5	63.5	36.6	18.3	5/8 - 11 UNC	19.1	26.7	12.7	45.0	33.3	8AB-03	4U204-08 x
										M16 - 2						8AB-03B	
4U8AB8-10 x		5/8	10														4U204-10 x
4U8AB8-12 x		3/4	12														4U204-12 x
4U8AB8-20M x	20M																4U204-20M x
				2.047	3.88	2.75	2.5	1.44	0.72	3/4 - 14 NPSM	0.75	1.06	0.56	1.78	1.5	8AC	
				52	98.6	69.9	63.5	36.6	18.3		19.1	26.9	14.2	45.2	38.1		
4U8AC8-25M x	25M																4U205-25M x
4U8AC8-16 x		1	16														4U205-16 x
				2.441	4.06	3.13	2.5	1.44	0.72	3/4 - 14 NPSM	0.75	1.19	0.63	1.91	1.75	8AD	
				62	103.1	79.5	63.5	36.6	18.3	5/8 - 11 UNC	19.1	30.2	16.0	48.5	44.5	8AD-02	
										M16 - 2						8AD-03	
4U8AD8-30M x	30M																4U206-30M x
4U8AD8-19 x		1-3/16	19														4U206-19 x
4U8AD8-20 x		1-1/4	20														4U206-20 x
				2.835	4.56	3.63	2.75	1.44	0.72	3/4 - 14 NPSM	0.75	1.27	0.69	1.99	2.19	8AE	
4U8AE8-20 x		1-1/4	20	72	115.8	92.2	69.9	36.6	18.3	1 - 8 UNC	19.1	32.3	17.5	50.5	55.6	8AE-01	4U207-20 x
										5/8 - 11 NPSM						8AE-02	
4U8AE8-22 x		1-3/8	22														4U207-22 x
4U8AE8-35M x	35M																4U207-35M x
4U8AE8-23 x		1-7/16	23														4U207-23 x
				3.150	4.75	3.75	2.88	1.44	0.72	3/4 - 14 NPSM	0.75	1.37	0.75	2.09	2.37	8AF	
4U8AF8-24 x		1-1/2	24	80	120.7	95.3	73.2	36.6	18.3	3/4 - 10 NPSM	19.1	34.8	19.1	53.1	60.2	8AF-01	4U208-24 x
4U8AF8-40M x	40M																4U208-40M x
				3.346	5.38	4.25	3.25	1.88	0.94	1 - 11 1/2 NPSM	0.81	1.37	0.75	2.31	2.5	8AG	
				85	136.7	108.0	82.6	47.8	23.9		20.6	34.8	19.1	58.7	63.5		
4U8AG8-28 x		1-3/4	28														4U209-28 x
				3.543	5.5	4.5	3.25	1.88	0.94	1 - 11 1/2 NPSM	0.81	1.5	0.75	2.44	2.75	8AH	
				90	139.7	114.3	82.6	47.8	23.9	1 - 8 UNC	20.6	38.1	19.1	62.0	69.9	8AH-01	
4U8AH8-31 x		1-15/16	31														4U210-31 x
4U8AH8-50M x	50M																4U210-50M x
4U8AH8-32 x		2	32														4U210-32 x
4U8AI8-32 x		2	32	3.937	5.94	5	3.44	1.97	0.99	1 1/4 - 11 1/2 NPSM	1	1.72	0.87	2.71	3	8AI	4U211-32 x
				100	150.9	127.0	87.4	50.0	25.0	1 1/4 - 7 UNC	25.4	43.7	22.1	68.7	76.2	8AI-01	
4U8AI8-35 x		2-3/16	35														4U211-35 x
				4.331	6.81	5.63	4	1.97	0.99	1 1/4 - 11 1/2 NPSM	1	1.84	1	2.83	3.32	8AJ	
				110	173.0	143.0	101.6	50.0	25.0	1 1/2 - 6 UNC	25.4	46.7	25.4	71.8	84.3	8AJ-01	
4U8AJ8-39 x		2-7/16	39														4U212-39 x
				4.921	7.88	6.5	4.63	2.47	1.24	1 1/2 - 11 1/2 NPSM	1.25	1.94	1.19	3.18	4.02	8AK	
				125	200.2	165.1	117.6	62.7	31.4		31.8	49.3	30.2	80.6	102.1		
4U8AK8-44 x		2-3/4	44														4U214-44 x
				5.128	7.88	6.5	4.63	2.47	1.24	1 1/2 - 11 1/2 NPSM	1.25	2.15	1.31	3.39	4.02	8AL	
				130	200.2	165.1	117.6	62.7	31.4		31.8	54.6	33.3	86.0	102.1		
4U8AL8-47 x		2-15/16	47														4U215-47 x
4U8AL8-75M x	75M																4U215-75M x
4U8AL8-48 x		3	48														4U215-48 x

X indicates a 2-letter designation for lube & seals

G = food grade grease
F = food grade EPL
Other alpha - refer to page 3
X = standard configuration
O = open (no seal or flinger)
Others - refer to page 3

Example: GX = food grade grease with standard seals & flingers

Stainless Ball Solution® Three-Bolt Flange

CHOICE

Eccentric lock stainless ball bearing Series “4U”
Standard three-bolt pattern Series “3”
Stainless housing Series “A”



More Sizes / Styles
Inserts pgs F-5 to F-9
Eccentric inserts in SS or KG: pgs F-10 to F-34
QuiKlean® eccentric: pgs F-34 to F-47
Set screw inserts in SS or KG: pgs F-48 to F-72
QuiKlean® set screw: pgs F-72 to F-85

“x” indicates a 2-letter designation referring to lube & seals

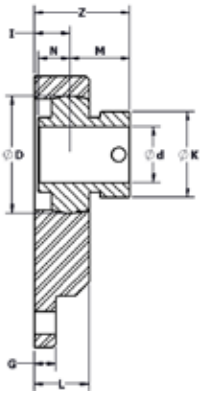

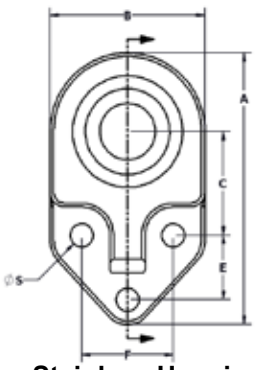

Stainless Housing

MOUNTED BEARING PART NUMBER	d mm	d in	d 16th	Sphere OD size D	A	B	C	E	F	G	L	I	Bolt size S	Brg c/l to front M	Brg c/l to back N	Overall LTB of brg (I+M) Z	Brg collar size K	Housing PN	Ball bearing PN WIDE ECC
				1.575	3.5	2	1.38	0.81	1.25	0.25	0.85	0.53	5/16"	0.91	0.39	1.44	1.13	3AA	
4U3AA8-08 x		1/2	8	40	88.9	50.8	35.1	20.6	31.8	6.4	21.6	13.5		23.1	9.9	36.6	28.7		4U203-08 x
4U3AA8-10 x		5/8	10																4U203-10 x
				1.850	4.25	2.5	1.69	0.88	1.5	0.31	0.95	0.59	3/8"	1.05	0.5	1.64	1.31	3AB	
4U3AB8-08 x		1/2	8	47	108.0	63.5	42.9	22.4	38.1	7.9	24.1	15.0		26.7	12.7	41.7	33.3		4U204-08 x
4U3AB8-10 x		5/8	10																4U204-10 x
4U3AB8-12 x		3/4	12																4U204-12 x
4U3AB8-20M x	20M																		4U204-20M x
				2.047	4.75	2.75	1.81	1.13	1.63	0.38	0.97	0.64	3/8"	1.06	0.56	1.70	1.5	3AC	
				52	120.7	69.9	46.0	28.7	41.4	9.7	24.6	16.3		26.9	14.2	43.2	38.1		
4U3AC8-25M x	25M																		4U205-25M
4U3AC8-16 x		1	16																4U205-16 x
				2.441	5.38	3.12	2.06	1.25	1.88	0.38	1.07	0.66	3/8"	1.19	0.63	1.85	1.75	3AD	
				62	136.7	79.2	52.3	31.8	47.8	9.7	27.2	16.8		30.2	16.0	47.0	44.5		
4U3AD8-30M x	30M																		4U206-30M x
4U3AD8-19 x		1-3/16	19																4U206-19 x
4U3AD8-20 x		1-1/4	20																4U206-20 x
				2.835	6	3.63	2.38	1.25	2	0.5	1.22	0.79	1/2"	1.27	0.69	2.06	2.19	3AE	
4U3AE8-20 x		1-1/4	20	72	152.4	92.2	60.5	31.8	50.8	12.7	31.0	20.1		32.3	17.5	52.3	55.6		4U207-20 x
4U3AE8-22 x		1-3/8	22																4U207-22 x
4U3AE8-35M x	35M																		4U207-35M x
4U3AE8-23 x		1-7/16	23																4U207-23 x
				3.150	6.5	4	2.56	1.38	2.25	0.5	1.24	0.77	1/2"	1.37	0.75	2.14	2.37	3AF	
4U3AF8-24 x		1-1/2	24	80	165.1	101.6	65.0	35.1	57.2	12.7	31.5	19.6		34.8	19.1	54.4	60.2		4U208-24 x
4U3AF8-40M x	40M																		4U208-40M x
				3.346	6.94	4.25	2.75	1.5	2.5	0.5	1.24	0.76	1/2"	1.37	0.75	2.13	2.5	3AG	
				85	176.3	108.0	69.9	38.1	63.5	12.7	31.5	19.3		34.8	19.1	54.1	63.5		
4U3AG8-28 x		1-3/4	28																4U209-28 x
				3.543	7.41	4.56	2.94	1.63	2.75	0.5	1.24	0.77	1/2"	1.5	0.75	2.27	2.75	3AH	
				90	188.2	115.8	74.7	41.4	69.9	12.7	31.5	19.6		38.1	19.1	57.7	69.9		
4U3AH8-31 x		1-15/16	31																4U210-31 x
4U3AH8-50M x	50M																		4U210-50M x
4U3AH8-32 x		2	32																4U210-32 x
4U3AI8-32 x		2	32	3.937	8.04	4.95	3.13	1.75	3	0.63	1.47	0.92	5/8"	1.72	0.87	2.64	3	3AI	4U211-32 x
				100	204.2	125.7	79.5	44.5	76.2	16.0	37.3	23.4		43.7	22.1	67.1	76.2		
4U3AI8-35 x		2-3/16	35																4U211-35 x
				4.331	8.88	5.63	3.38	2	3.5	0.63	1.66	1.07	5/8"	1.84	1	2.91	3.32	3AJ	
				110	225.6	143.0	85.9	50.8	88.9	16.0	42.2	27.2		46.7	25.4	73.9	84.3		
4U3AJ8-39 x		2-7/16	39																4U212-39 x
				4.921	10.03	6.44	3.75	2.38	4.25	0.63	1.86	1.25	5/8"	1.94	1.19	3.19	4.02	3AK	
				125	254.8	163.6	95.3	60.5	108.0	16.0	47.2	31.8		49.3	30.2	81.0	102.1		
4U3AK8-44 x		2-3/4	44																4U214-44 x
				5.128	10.69	6.5	4	2.63	4.25	0.75	1.98	1.39	3/4"	2.15	1.31	3.54	4.02	3AL	
				130	271.5	165.1	101.6	66.8	108.0	19.1	50.3	35.3		54.6	33.3	89.9	102.1		
4U3AL8-47 x		2-15/16	47																4U215-47 x
4U3AL8-75M x	75M																		4U215-75M x
4U3AL8-48 x		3	48																4U215-48 x

X indicates a 2-letter designation for lube & seals

G = food grade grease
F = food grade EPL
Other alpha - refer to page 3
X = standard configuration
O = open (no seal or flinger)
Others - refer to page 3

Example: GX = food grade grease with standard seals & flingers

Stainless Ball Solution® Three-Bolt Flange

CHOICE

Eccentric lock stainless ball bearing Series "4U"
Standard three-bolt pattern Series "3"
Polymer housing Series "G"



More Sizes / Styles
Inserts pgs F-5 to F-9
Eccentric inserts in SS or KG: pgs F-10 to F-34
QuiKlean® eccentric: pgs F-34 to F-47
Set screw inserts in SS or KG: pgs F-48 to F-72
QuiKlean® set screw: pgs F-72 to F-85

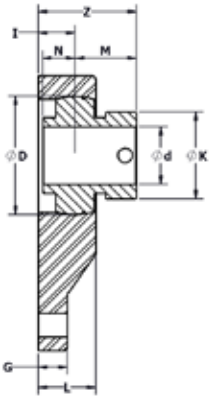

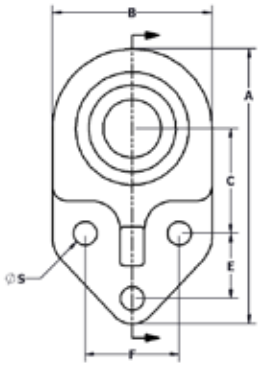

"x" indicates a 2-letter designation referring to lube & seals

Polymer Housing

MOUNTED BEARING PART NUMBER	d			Sphere OD size									Bolt size	Brg c/l to front	Brg c/l to back	Overall LTB of brg (I+M)	Brg collar size	Housing PN	Ball bearing PN
	mm	in	16th	D	A	B	C	E	F	G	L	I	S	M	N	Z	K		WIDE ECC
				1.575	3.66	2.19	1.38	0.81	1.25	0.44	0.85	0.53	5/16"	0.91	0.39	1.44	1.13	3GA	
4U3GA8-08 x		1/2	8	40	93.0	55.6	35.1	20.6	31.8	11.2	21.6	13.5		23.1	9.9	36.6	28.7		4U203-08 x
4U3GA8-10 x		5/8	10																4U203-10 x
				1.850	4.34	2.56	1.68	0.88	1.5	0.44	0.95	0.59	3/8"	1.05	0.5	1.64	1.31	3GB	
4U3GB8-08 x		1/2	8	47	110.2	65.0	42.7	22.4	38.1	11.2	24.1	15.0		26.7	12.7	41.7	33.3		4U204-08 x
4U3GB8-10 x		5/8	10																4U204-10 x
4U3GB8-12 x		3/4	12																4U204-12 x
4U3GB8-20M x	20M																		4U204-20M x
				2.047	4.75	2.75	1.81	1.12	1.63	0.5	0.99	0.64	3/8"	1.06	0.56	1.70	1.5	3GC	
				52	120.7	69.9	46.0	28.4	41.4	12.7	25.1	16.3		26.9	14.2	43.2	38.1		
4U3GC8-25M x	25M																		4U205-25M x
4U3GC8-16 x		1	16																4U205-16 x
				2.441	5.44	3.25	2.06	1.25	1.88	0.5	1.07	0.66	3/8"	1.19	0.63	1.85	1.75	3GD	
				62	138.2	82.6	52.3	31.8	47.8	12.7	27.2	16.8		30.2	16.0	47.0	44.5		
4U3GD8-30M x	30M																		4U206-30M x
4U3GD8-19 x		1-3/16	19																4U206-19 x
4U3GD8-20 x		1-1/4	20																4U206-20 x
				2.835	6.19	3.81	2.38	1.25	2	0.56	1.22	0.79	1/2"	1.27	0.69	2.06	2.19	3GE	
4U3GE8-20 x		1-1/4	20	72	157.2	96.8	60.5	31.8	50.8	14.2	31.0	20.1		32.3	17.5	52.3	55.6		4U207-20 x
4U3GE8-22 x		1-3/8	22																4U207-22 x
4U3GE8-35M x	35M																		4U207-35M x
4U3GE8-23 x		1-7/16	23																4U207-23 x
				3.150	6.72	4.25	2.56	1.38	2.25	0.56	1.24	0.77	1/2"	1.37	0.75	2.14	2.37	3GF	
4U3GF8-24 x		1-1/2	24	80	170.7	108.0	65.0	35.1	57.2	14.2	31.5	19.6		34.8	19.1	54.4	60.2		4U208-24 x
4U3GF8-40M x	40M																		4U208-40M x
				3.346	7.19	4.56	2.75	1.5	2.5	0.63	1.24	0.76	1/2"	1.37	0.75	2.13	2.5	3GG	
				85	182.6	115.8	69.9	38.1	63.5	16.0	31.5	19.3		34.8	19.1	54.1	63.5		
4U3GG8-28 x		1-3/4	28																4U209-28 x
				3.543	7.63	4.88	2.94	1.63	2.75	0.63	1.24	0.77	1/2"	1.5	0.75	2.27	2.75	3GH	
				90	193.8	124.0	74.7	41.4	69.9	16.0	31.5	19.6		38.1	19.1	57.7	69.9		
4U3GH8-31 x		1-15/16	31																4U210-31 x
4U3GH8-50M x	50M																		4U210-50M x
4U3GH8-32 x		2	32																4U210-32 x
4U3GI8-32 x		2	32	3.937	8.38	5.38	3.12	1.75	3	0.69	1.47	0.92	5/8"	1.72	0.87	2.64	3	3GI	4U211-32 x
				100	212.9	136.7	79.2	44.5	76.2	17.5	37.3	23.4		43.7	22.1	67.1	76.2		
4U3GI8-35 x		2-3/16	35																4U211-35 x
				4.331	9.19	6	3.38	2	3.5	0.69	1.66	1.07	5/8"	1.84	1	2.91	3.32	3GJ	
				110	233.4	152.4	85.9	50.8	88.9	17.5	42.2	27.2		46.7	25.4	73.9	84.3		
4U3GJ8-39 x		2-7/16	39																4U212-39 x
				4.921	10.38	6.88	3.75	2.38	4.25	0.75	1.86	1.25	5/8"	1.94	1.19	3.19	4.02	3GK	
				125	263.7	174.8	95.3	60.5	108.0	19.1	47.2	31.8		49.3	30.2	81.0	102.1		
4U3GK8-44 x		2-3/4	44																4U214-44 x
				5.128	11.13	7.13	4	2.63	4.25	1	1.98	1.39	5/8	2.15	1.31	3.54	4.02	3GL	
				130	282.7	181.1	101.6	66.8	108.0	25.4	50.3	35.3		54.6	33.3	89.9	102.1		
4U3GL8-47 x		2-15/16	47																4U215-47 x
4U3GL8-75M x	75M																		4U215-75M x
4U3GL8-48 x		3	48																4U215-48 x

X indicates a 2-letter designation for lube & seals

G = food grade grease
F = food grade EPL
Other alpha - refer to page 3
X = standard configuration
O = open (no seal or flinger)
Others - refer to page 3

Example: GX = food grade grease with standard seals & flingers

Stainless Ball Solution®
Round Three-Bolt Flange

CHOICE

Eccentric lock stainless ball bearing Series “4U”
Round three-bolt pattern Series “22”
Stainless housing Series “A”



More Sizes / Styles
Inserts pgs F-5 to F-9
Eccentric inserts in SS or KG: pgs F-10 to F-34
QuiKlean® eccentric: pgs F-34 to F-47
Set screw inserts in SS or KG: pgs F-48 to F-72
QuiKlean® set screw: pgs F-72 to F-85

“x” indicates a 2-letter designation referring to lube & seals

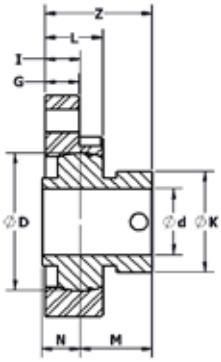

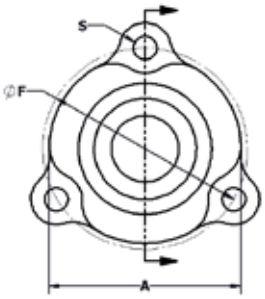

Stainless Housing

MOUNTED BEARING PART NUMBER	d			Sphere OD size						Bolt size	Brg c/l to front	Brg c/l to back	Overall LTB of brg (I+M)	Brg collar size	Housing PN	Ball bearing PN
	mm	in	16th	D	A	F	G	L	I	S	M	N	Z	K		WIDE ECC
	12			1.575	2.4	2.5	0.38	0.69	0.43	1/4	0.91	0.39	1.34	1.13	22AA	
4U22AA8-08 x		1/2	8	40	61.0	63.5	9.5	17.5	10.9		23.1	9.9	34.0	28.7		4U203-08 x
		9/16	9													
	15															
4U22AA8-10 x		5/8	10													4U203-10 x
	17															
	12			1.575	2.4	2.39	0.38	0.69	0.43	1/4	0.91	0.39	1.34	1.13	22AA-01	
4U22AA-018-08 x		1/2	8	40	61.0	60.7	9.5	17.5	10.9		23.1	9.9	34.0	28.7		4U203-08 x
		9/16	9													
	15															
4U22AA-018-10 x		5/8	10													4U203-10 x
	17															
	12			1.850	2.5	2.81	0.42	0.78	0.43	5/16	1.05	0.5	1.48	1.31	22AB	
4U22AB8-08 x		1/2	8	47	63.5	71.4	10.7	19.8	10.9		26.7	12.7	37.6	33.3		4U204-08 x
	15															
4U22AB8-10 x		5/8	10													4U204-10 x
	17															
		11/16	11													
4U22AB8-12 x		3/4	12													4U204-12 x
4U22AB8-20M x	20M															4U204-20M x
		3/4	12	2.047	2.8	3	0.5	0.84	0.53	5/16	1.06	0.56	1.59	1.5	22AC	
		7/8		52	71.1	76.2	12.7	21.3	13.5		26.9	14.2	40.4	38.1		
		15/16														
4U22AC8-25M x	25M															4U205-25M x
4U22AC8-16 x		1	16													4U205-16 x
		1	16	2.441	3.31	3.56	0.58	0.98	0.6	3/8	1.19	0.63	1.79	1.75	22AD	
		1-1/16	17	62	84.1	90.4	14.7	24.9	15.2		30.2	16.0	45.5	44.5		
		1-1/8	18													
4U22AD8-30M x	30M															4U206-30M x
4U22AD8-19 x		1-3/16	19													4U206-19 x
4U22AD8-20 x		1-1/4	20													4U206-20 x
		1-3/16	19	2.835	3.69	3.94	0.66	1.12	0.7	3/8	1.27	0.69	1.97	2.19	22AE	
4U22AE8-20 x		1-1/4	20	72	93.7	100.1	16.8	28.4	17.8		32.3	17.5	50.0	55.6		4U207-20 x
		1-5/16	21													
4U22AE8-22 x		1-3/8	22													4U207-22 x
4U22AE8-35M x	35M															4U207-35M x
4U22AE8-23 x		1-7/16	23													4U207-23 x
		1-7/16	23	3.150	3.69	3.94	0.66	1.12	0.7	3/8	1.37	0.75	2.07	2.37	22AF	
4U22AF8-24 x		1-1/2	24	80	93.7	100.1	16.8	28.4	17.8		34.8	19.1	52.6	60.2		4U208-24 x
4U22AF8-40M x	40M															4U208-40M x
		1-1/2	24	3.334	4.5	4.75	0.65	1.12	0.7	1/2	1.37	0.75	2.07	2.5	22AG	
		1-5/8	26	85	114.3	120.7	16.5	28.4	17.8		34.8	19.1	52.6	63.5		
		1-11/16	27													
4U22AG8-28 x		13/4	28													4U209-28 x
		1-3/4	28	3.543	4.5	5	0.63	1.13	0.72	1/2	1.5	0.75	2.22	2.75	22AH	
		1-7/8	30	90	114.3	127.0	15.9	28.6	18.3		38.1	19.1	56.4	69.9		
4U22AH8-31 x		1-15/16	31													4U210-31 x
4U22AH8-50M x	50M															4U210-50M x
4U22AH8-32 x		2	32													4U210-32 x

X indicates a 2-letter designation for lube & seals
G = food grade grease
F = food grade EPL
Other alpha - refer to page 3
X = standard configuration
O = open (no seal or flinger)
Others - refer to page 3
Example: GX = food grade grease with standard seals & flingers

Stainless Ball Solution®
Round Three-Bolt Flange

CHOICE

Eccentric lock stainless ball bearing Series “4U”
Round three-bolt pattern Series “22”
Polymer housing Series “G”



More Sizes / Styles
Inserts pgs F-5 to F-9
Eccentric inserts in SS or KG: pgs F-10 to F-34
QuiKlean® eccentric: pgs F-34 to F-47
Set screw inserts in SS or KG: pgs F-48 to F-72
QuiKlean® set screw: pgs F-72 to F-85

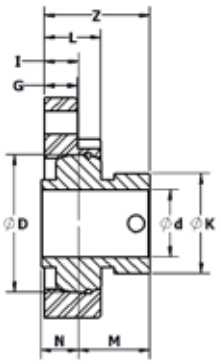

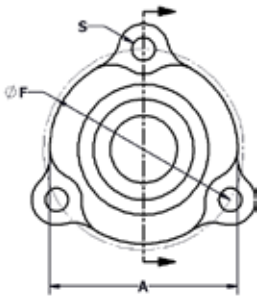

“x” indicates a 2-letter designation referring to lube & seals

Polymer Housing

MOUNTED BEARING PART NUMBER	d			Sphere OD size					Sph depth	Bolt size	Brg c/l to front	Brg c/l to back	Overall LTB of brg (I+M)	Brg collar size	Housing PN	Ball Bearing PN
	mm	in	16th	D	A	F	G	L	I	S	M	N	Z	K		WIDE ECC
	12			1.575	2.38	2.5	0.38	0.69	0.41	1/4	0.91	0.39	1.32	1.13	22GA	
4U22GA8-08 x		1/2	8	40	60.5	63.5	9.5	17.5	10.4		23.1	9.9	33.5	28.7		4U203-08 x
		9/16	9													
	15															
4U22GA8-10 x		5/8	10													4U203-10 x
	17															
	12			1.575	2.38	2.39	0.38	0.69	0.41	1/4	0.91	0.39	1.32	1.13	22GA-01	
4U22GA-018-08 x		1/2	8	40	60.5	60.7	9.5	17.5	10.4		23.1	9.9	33.5	28.7		4U203-08 x
		9/16	9													
	15															
4U22GA-018-10 x		5/8	10													4U203-10 x
	17															
	12			1.850	2.5	2.81	0.42	0.78	0.43	5/16	1.05	0.5	1.48	1.31	22GB	
4U22GB8-08 x		1/2	8	47	63.5	71.4	10.7	19.8	10.9		26.7	12.7	37.6	33.3		4U204-08 x
	15															
4U22GB8-10 x		5/8	10													4U204-10 x
	17															
		11/16	11													
4U22GB8-12 x		3/4	12													4U204-12 x
4U22GB8-20M x	20M															4U204-20M x
		3/4	12	2.047	2.81	3	0.5	0.84	0.51	5/16	1.06	0.56	1.57	1.5	22GC	
		7/8		52	71.4	76.2	12.7	21.3	13.0		26.9	14.2	39.9	38.1		
		15/16														
4U22GC8-25M x	25M															4U205-25M x
4U22GC8-16 x		1	16													4U205-16 x
		1	16	2.441	3.31	3.56	0.58	0.98	0.58	3/8	1.19	0.63	1.77	1.75	22GD	
		1-1/16	17	62	84.1	90.4	14.7	24.9	14.7		30.2	16.0	45.0	44.5		
		1-1/8	18													
4U22GD8-30M x	30M															4U206-30M x
4U22GD8-19 x		1-3/16	19													4U206-19 x
4U22GD8-20 x		1-1/4	20													4U206-20 x
		1-3/16	19	2.835	3.69	3.94	0.66	1.08	0.68	3/8	1.27	0.69	1.95	2.19	22GE	
4U22GE8-20 x		1-1/4	20	72	93.7	100.1	16.8	27.4	17.3		32.3	17.5	49.5	55.6		4U207-20 x
		1-5/16	21													
4U22GE8-22 x		1-3/8	22													4U207-22 x
4U22GE8-35M x	35M															4U207-35M x
4U22GE8-23 x		1-7/16	23													4U207-23 x

X indicates a 2-letter designation for lube & seals

G = food grade grease
F = food grade EPL
Other alpha - refer to page 3
X = standard configuration
O = open (no seal or flinger)
Others - refer to page 3

Example: GX = food grade grease with standard seals & flingers

Stainless Ball Solution® Four-Bolt Flange

CHOICE

Eccentric lock stainless ball bearing Series “4U”
Standard four-bolt pattern Series “4”
Stainless housing Series “A”

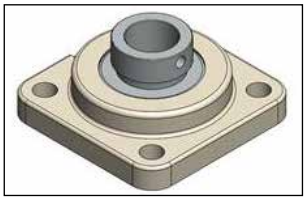

More Sizes / Styles
Inserts pgs F-5 to F-9
Eccentric inserts in SS or KG: pgs F-10 to F-34
QuiKlean® eccentric: pgs F-34 to F-47
Set screw inserts in SS or KG: pgs F-48 to F-72
QuiKlean® set screw: pgs F-72 to F-85

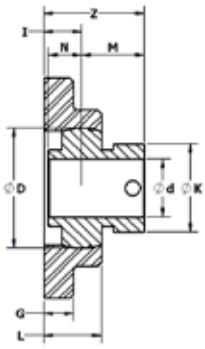

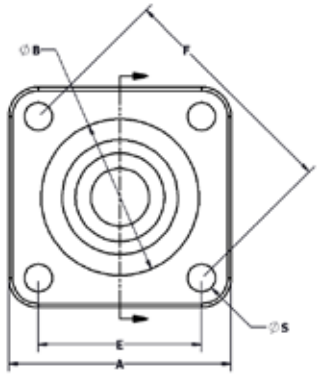

“x” indicates a 2-letter designation referring to lube & seals

Stainless Housing

MOUNTED BEARING PART NUMBER	d			Sphere OD size								Bolt size	Brg c/l to front	Brg c/l to back	Overall LTB of brg (I+M)	Brg collar size	Housing PN	Ball bearing PN
	mm	in	16th	D	A	B	E	F	G	L	I	S	M	N	Z	K		WIDE ECC
				1.575	3	2.15	2.13	3.01	0.44	0.85	0.53	3/8"	0.91	0.39	1.44	1.13	4AA	
4U4AA8-08 x		1/2	8	40	76.2	54.6	54.1	76.5	11.2	21.6	13.5		23.1	9.9	36.6	28.7		4U203-08 x
4U4AA8-10 x		5/8	10															4U203-10 x
				1.850	3.38	2.42	2.5	3.54	0.44	0.95	0.59	3/8"	1.05	0.5	1.64	1.31	4AB	
4U4AB8-08 x		1/2	8	47	85.9	61.5	63.5	89.9	11.2	24.1	15.0		26.7	12.7	41.7	33.3		4U204-08 x
4U4AB8-10 x		5/8	10															4U204-10 x
4U4AB8-12 x		3/4	12															4U204-12 x
4U4AB8-20M x	20M																	4U204-20M x
				2.047	3.75	2.66	2.75	3.89	0.5	0.97	0.64	7/16"	1.06	0.56	1.70	1.5	4AC	
				52	95.3	67.6	69.9	98.8	12.7	24.6	16.3		26.9	14.2	43.2	38.1		
4U4AC8-25M x	25M																	4U205-25M x
4U4AC8-16 x		1	16															4U205-16 x
				2.441	4.25	3.13	3.25	4.6	0.5	1.07	0.66	7/16"	1.19	0.63	1.85	1.75	4AD	
				62	108.0	79.5	82.6	116.8	12.7	27.2	16.8		30.2	16.0	47.0	44.5		
4U4AD8-30M x	30M																	4U206-30M x
4U4AD8-19 x		1-3/16	19															4U206-19 x
4U4AD8-20 x		1-1/4	20															4U206-20 x
				2.835	4.75	3.63	3.63	5.13	0.56	1.22	0.79	1/2"	1.27	0.69	2.06	2.19	4AE	
4U4AE8-20 x		1-1/4	20	72	120.7	92.2	92.2	130.3	14.2	31.0	20.1		32.3	17.5	52.3	55.6		4U207-20 x
4U4AE8-22 x		1-3/8	22															4U207-22 x
4U4AE8-35M x	35M																	4U207-35M x
4U4AE8-23 x		1-7/16	23															4U207-23 x
				3.150	5.13	4	4	5.66	0.56	1.24	0.77	1/2"	1.37	0.75	2.14	2.37	4AF	
4U4AF8-24 x		1-1/2	24	80	130.3	101.6	101.6	143.8	14.2	31.5	19.6		34.8	19.1	54.4	60.2		4U208-24 x
4U4AF8-40M x	40M																	4U208-40M x
				3.346	5.25	4.25	4.13	5.83	0.63	1.24	0.76	1/2"	1.37	0.75	2.13	2.5	4AG	
				85	133.4	108.0	104.9	148.1	16.0	31.5	19.3		34.8	19.1	54.1	63.5		
4U4AG8-28 x		1-3/4	28															4U209-28 x
				3.543	5.5	4.56	4.38	6.19	0.63	1.24	0.77	1/2"	1.5	0.75	2.27	2.75	4AH	
				90	139.7	115.8	111.3	157.2	16.0	31.5	19.6		38.1	19.1	57.7	69.9		
4U4AH8-31 x		1-15/16	31															4U210-31 x
4U4AH8-50M x	50M																	4U210-50M x
4U4AH8-32 x		2	32															4U210-32 x
4U4AI8-32 x		2	32	3.937	6.5	5.06	5.13	7.25	0.69	1.47	0.92	5/8"	1.72	0.87	2.64	3	4AI	4U211-32 x
				100	165.1	128.5	130.3	184.2	17.5	37.3	23.4		43.7	22.1	67.1	76.2		
4U4AI8-35 x		2-3/16	35															4U211-35 x
				4.331	7	5.63	5.63	7.96	0.69	1.66	1.07	5/8"	1.84	1	2.91	3.32	4AJ	
				110	177.8	143.0	143.0	202.2	17.5	42.2	27.2		46.7	25.4	73.9	84.3		
4U4AJ8-39 x		2-7/16	39															4U212-39 x
				4.921	7.25	6.44	5.88	8.31	0.75	1.86	1.25	5/8"	1.94	1.19	3.19	4.02	4AK	
				125	184.2	163.6	149.4	211.1	19.1	47.2	31.8		49.3	30.2	81.0	102.1		
4U4AK8-44 x		2-3/4	44															4U214-44 x
				5.128	7.62	6.5	6	8.49	1	1.98	1.39	3/4"	2.15	1.31	3.54	4.02	4AL	
				130	193.5	165.1	152.4	215.6	25.4	50.3	35.3		54.6	33.3	89.9	102.1		
4U4AL8-47 x		2-15/16	47															4U215-47 x
4U4AL8-75M x	75M																	4U215-75M x
4U4AL8-48 x		3	48															4U215-48 x

X indicates a 2-letter designation for lube & seals
G = food grade grease
F = food grade EPL
Other alpha - refer to page 3
X = standard configuration
O = open (no seal or flinger)
Others - refer to page 3
Example: GX = food grade grease with standard seals & flingers

Stainless Ball Solution® Four-Bolt Flange

CHOICE

Eccentric lock stainless ball bearing Series "4U"
Standard four-bolt pattern Series "4"
Polymer housing Series "G"



More Sizes / Styles
Inserts pgs F-5 to F-9
Eccentric inserts in SS or KG: pgs F-10 to F-34
QuiKlean® eccentric: pgs F-34 to F-47
Set screw inserts in SS or KG: pgs F-48 to F-72
QuiKlean® set screw: pgs F-72 to F-85

"x" indicates a 2-letter designation referring to lube & seals

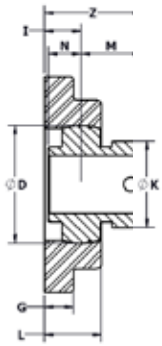

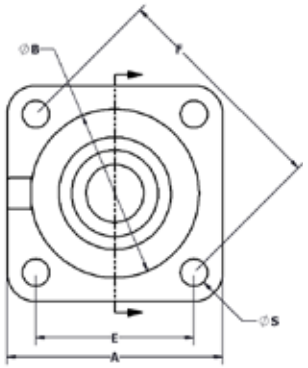

Polymer Housing

MOUNTED BEARING PART NUMBER	d			Sphere OD size								Bolt size	Brg c/l to front	Brg c/l to back	Overall LTB of brg (I+M)	Brg collar size	Housing PN	Ball bearing PN
	mm	in	16th	D	A	B	E	F	G	L	I	S	M	N	Z	K		WIDE ECC
				1.575	3	2.15	2.13	3.01	0.44	0.85	0.53	3/8"	0.91	0.39	1.44	1.13	4GA	
4U4GA8-08 x		1/2	8	40	76.2	54.6	54.1	76.5	11.2	21.6	13.5		23.1	9.9	36.6	28.7		4U203-08 x
4U4GA8-10 x		5/8	10															4U203-10 x
				1.850	3.38	2.69	2.5	3.54	0.44	0.95	0.59	3/8"	1.05	0.5	1.64	1.31	4GB	
4U4GB8-08 x		1/2	8	47	85.9	68.3	63.5	89.9	11.2	24.1	15.0		26.7	12.7	41.7	33.3		4U204-08 x
4U4GB8-10 x		5/8	10															4U204-10 x
4U4GB8-12 x		3/4	12															4U204-12 x
4U4GB8-20M x	20M																	4U204-20M x
				2.047	3.75	2.93	2.75	3.89	0.5	0.99	0.64	7/16"	1.06	0.56	1.70	1.5	4GC	
				52	95.3	74.4	69.9	98.8	12.7	25.1	16.3		26.9	14.2	43.2	38.1		
4U4GC8-25M x	25M																	4U205-25M x
4U4GC8-16 x		1	16															4U205-16 x
				2.441	4.25	3.63	3.25	4.6	0.5	1.07	0.66	7/16"	1.19	0.63	1.85	1.75	4GD	
				62	108.0	92.2	82.6	116.8	12.7	27.2	16.8		30.2	16.0	47.0	44.5		
4U4GD8-30M x	30M																	4U206-30M x
4U4GD8-19 x		1-3/16	19															4U206-19 x
4U4GD8-20 x		1-1/4	20															4U206-20x
				2.835	4.75	4	3.63	5.13	0.56	1.22	0.79	1/2"	1.27	0.69	2.06	2.19	4GE	
4U4GE8-20 x		1-1/4	20	72	120.7	101.6	92.2	130.3	14.2	31.0	20.1		32.3	17.5	52.3	55.6		4U207-20 x
4U4GE8-22 x		1-3/8	22															4U207-22 x
4U4GE8-35M x	35M																	4U207-35M x
4U4GE8-23 x		1-7/16	23															4U207-23 x
				3.150	5.13	4.56	4	5.66	0.56	1.24	0.77	1/2"	1.37	0.75	2.14	2.37	4GF	
4U4GF8-24 x		1-1/2	24	80	130.3	115.8	101.6	143.8	14.2	31.5	19.6		34.8	19.1	54.4	60.2		4U208-24 x
4U4GF8-40M x	40M																	4U208-40M x
				3.346	5.25	4.74	4.13	5.83	0.63	1.24	0.76	1/2"	1.37	0.75	2.13	2.5	4GG	
				85	133.4	120.4	104.9	148.1	16.0	31.5	19.3		34.8	19.1	54.1	63.5		
4U4GG8-28 x		1-3/4	28															4U209-28 x
				3.543	5.5	5.06	4.38	6.19	0.63	1.24	0.77	1/2"	1.5	0.75	2.27	2.75	4GH	
				90	139.7	128.5	111.3	157.2	16.0	31.5	19.6		38.1	19.1	57.7	69.9		
4U4GH8-31 x		1-15/16	31															4U210-31 x
4U4GH8-50M x	50M																	4U210-50M x
4U4GH8-32 x		2	32															4U210-32 x
4U4GI8-32 x		2	32	3.937	6.5	5.88	5.13	7.25	0.69	1.47	0.92	5/8"	1.72	0.87	2.64	3	4GI	4U211-32x
				100	165.1	149.4	130.3	184.2	17.5	37.3	23.4		43.7	22.1	67.1	76.2		
4U4GI8-35 x		2-3/16	35															4U211-35 x
				4.331	7	6.56	5.62	7.96	0.69	1.66	1.07	5/8"	1.84	1	2.91	3.32	4GJ	
				110	177.8	166.6	142.7	202.2	17.5	42.2	27.2		46.7	25.4	73.9	84.3		
4U4GJ8-39 x		2-7/16	39															4U212-39 x
				4.921	6.94	6.44	5.87	8.31	0.75	1.86	1.25	5/8"	1.94	1.19	3.19	4.02	4GK	
				125	176.3	163.6	149.1	211.1	19.1	47.2	31.8		49.3	30.2	81.0	102.1		
4U4GK8-44 x		2-3/4	44															4U214-44 x
				5.128	7.63	6.94	6	8.49	1	1.98	1.39	3/4"	2.15	1.31	3.54	4.02	4GL	
				130	193.8	176.3	152.4	215.6	25.4	50.3	35.3		54.6	33.3	89.9	102.1		
4U4GL8-47 x		2-15/16	47															4U215-47 x
4U4GL8-75M x	75M																	4U215-75Mx
4U4GL8-48 x		3	48															4U215-48x

X indicates a 2-letter designation for lube & seals
G = food grade grease
F = food grade EPL
Other alpha - refer to page 3
X = standard configuration
O = open (no seal or flinger)
Others - refer to page 3
Example: GX = food grade grease with standard seals & flingers

Stainless Ball Solution®
Take Up Bearing, Narrow

CHOICE

Eccentric lock stainless ball bearing Series “4U”
Take up bearing pattern Series “5”
Stainless housing Series “A”



More Sizes / Styles
Inserts pgs F-5 to F-9
Eccentric inserts in SS or KG: pgs F-10 to F-34
QuiKlean® eccentric: pgs F-34 to F-47
Set screw inserts in SS or KG: pgs F-48 to F-72
QuiKlean® set screw: pgs F-72 to F-85

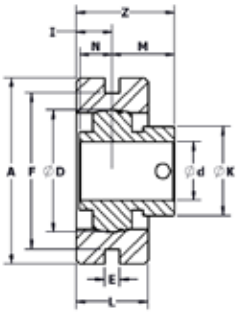

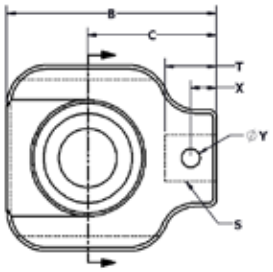

Stainless Housing

“x” indicates a 2-letter designation referring to lube & seals

MOUNTED BEARING PART NUMBER	d			Sphere OD size							Sph. depth	Hole size				Brg c/l to front	Btrg c/l to back	Overall LTB of brg (I+M)	Brg collar size	Housing	Ball bearing PN
	mm	in	16th	D	A	B	C	E	F	L	I	S	T	X	Y	M	N	Z	K	PN	WIDE ECC
				1.575	2.5	2.69	1.69	0.26	2	0.88	0.44	17/32	0.63	0.31	0.25	0.91	0.39	1.35	1.13	5AA	
4U5AA8-08 x		1/2	8	40	63.5	68.3	42.9		50.8	22.4	11.2		16.0	7.9		23.1	9.9	34.3	28.7		4U203-08 x
4U5AA8-10 x		5/8	10																		4U203-10 x
				1.850	3.13	3.44	2.19	0.26	2.63	1.22	0.61	25/32	0.88	0.44	0.31	1.05	0.5	1.66	1.31	5AB	
4U5AB8-08 x		1/2	8	47	79.5	87.4	55.6		66.8	31.0	15.5		22.4	11.2		26.7	12.7	42.2	33.3		4U204-08 x
4U5AB8-10 x		5/8	10																		4U204-10 x
4U5AB8-12 x		3/4	12																		4U204-12 x
4U5AB8-20M x	20M																				4U204-20M x
				2.047	3.13	3.56	2.19	0.26	2.63	1.22	0.61	25/32	0.88	0.44	0.31	1.06	0.56	1.67	1.5	5AC	
				52	79.5	90.4	55.6		66.8	31.0	15.5		22.4	11.2		26.9	14.2	42.4	38.1		
4U5AC8-25M x	25M																				4U205-25M x
4U5AC8-16 x		1	16																		4U205-16 x
				2.441	4.13	4.31	2.69	0.26	3.5	1.22	0.61	25/32	1	0.5	0.31	1.19	0.63	1.80	1.75	5AD	
				62	104.9	109.5	68.3		88.9	31.0	15.5		25.4	12.7		30.2	16.0	45.7	44.5		
4U5AD8-30M x	30M																				4U206-30M x
4U5AD8-19 x		1-3/16	19																		4U206-19 x
4U5AD8-20 x		1-1/4	20																		4U206-20x
				2.835	4.13	4.5	2.69	0.26	3.5	1.22	0.61	25/32	1	0.5	0.31	1.27	0.69	1.88	2.19	5AE	
4U5AE8-20 x		1-1/4	20	72	104.9	114.3	68.3		88.9	31.0	15.5		25.4	12.7		32.3	17.5	47.8	55.6		4U207-20 x
4U5AE8-22 x		1-3/8	22																		4U207-22 x
4U5AE8-35M x	35M																				4U207-35M x
4U5AE8-23 x		1-7/16	23																		4U207-23 x
				3.150	4.75	5.38	3.25	0.32	4	1.47	0.74	29/32	1.16	0.66	0.38	1.37	0.75	2.11	2.37	5AF	
4U5AF8-24 x		1-1/2	24	80	120.7	136.7	82.6		101.6	37.3	18.7		29.5	16.8		34.8	19.1	53.5	60.2		4U208-24 x
4U5AF8-40M x	40M																				4U208-40M x
				3.346	4.75	5.44	3.25	0.32	4	1.47	0.74	29/32	1.16	0.66	0.38	1.37	0.75	2.11	2.5	5AG	
				85	120.7	138.2	82.6		101.6	37.3	18.7		29.5	16.8		34.8	19.1	53.5	63.5		
4U5AG8-28 x		1-3/4	28																		4U209-28 x
				3.543	4.75	5.5	3.25	0.32	4	1.47	0.74	29/32	1.16	0.66	0.38	1.5	0.75	2.24	2.75	5AH	
				90	120.7	139.7	82.6		101.6	37.3	18.7		29.5	16.8		38.1	19.1	56.8	69.9		
4U5AH8-31 x		1-15/16	31																		4U210-31 x
4U5AH8-50M x	50M																				4U210-50M x
4U5AH8-32 x		2	32																		4U210-32 x
4U5AI8-32 x		2	32	3.937	5.38	6.13	3.63	0.32	4.44	1.72	0.86	1-1/32	1.28	0.69	0.44	1.72	0.87	2.58	3	5AI	4U211-32 x
				100	136.7	155.7	92.2		112.8	43.7	21.8		32.5	17.5		43.7	22.1	65.5	76.2		
4U5AI8-35 x		2-3/16	35																		4U211-35 x
				4.331	5.75	6.69	3.88	0.32	4.94	1.72	0.86	1-1/32	1.28	0.69	0.44	1.84	1	2.70	3.32	5AJ	
				110	146.1	169.9	98.6		125.5	43.7	21.8		32.5	17.5		46.7	25.4	68.6	84.3		
4U5AJ8-39 x		2-7/16	39																		4U212-39 x
				4.921	6.38	7.38	4.31	0.38	5.5	1.88	0.94	1-9/32	1.5	0.75	0.5	1.94	1.19	2.88	4.02	5AK	
				125	162.1	187.5	109.5		139.7	47.8	23.9		38.1	19.1		49.3	30.2	73.2	102.1		
4U5AK8-44 x		2-3/4	44																		4U214-44 x
				5.128	6.75	7.69	4.44	0.38	5.88	1.88	0.94	1-9/32	1.5	0.75	0.5	2.15	1.31	3.09	4.02	5AL	
				130	171.5	195.3	112.8		149.4	47.8	23.9		38.1	19.1		54.6	33.3	78.5	102.1		
4U5AL8-47 x		2-15/16	47																		4U215-47 x
4U5AL8-75M x	75M																				4U215-75M x
4U5AL8-48 x		3	48																		4U215-48 x

X indicates a 2-letter designation for lube & seals
G = food grade grease
F = food grade EPL
Other alpha - refer to page 3
X = standard configuration
O = open (no seal or flinger)
Others - refer to page 3
Example: GX = food grade grease with standard seals & flingers

Stainless Ball Solution®
Take Up Bearing, Narrow

CHOICE

Eccentric lock stainless ball bearing Series “4U”
Take up bearing pattern Series “5”
Polymer housing Series “G”



More Sizes / Styles
Inserts pgs F-5 to F-9
Eccentric inserts in SS or KG: pgs F-10 to F-34
QuiKlean® eccentric: pgs F-34 to F-47
Set screw inserts in SS or KG: pgs F-48 to F-72
QuiKlean® set screw: pgs F-72 to F-85

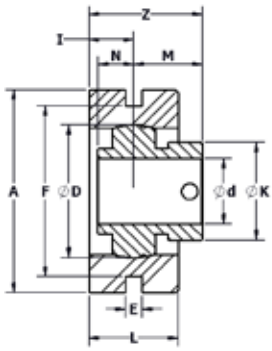

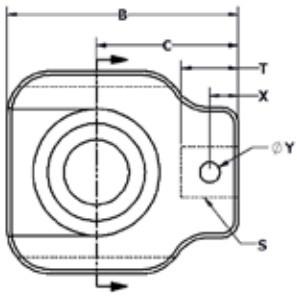

Polymer Housing

“x” indicates a 2-letter designation referring to lube & seals

MOUNTED BEARING PART NUMBER	d			Sphere OD size							Sph. depth	Hole size				Brg c/l to front	Brg c/l to back	Overall LTB of brg (I+M)	Brg collar size	Housing PN	Ball bearing PN
	mm	in	16th	D	A	B	C	E	F	L	I	S	T	X	Y	M	N	Z	K		WIDE ECC
		1/2	8	1.575	2.5	2.69	1.69	0.26	2	1		17/32	0.63	0.31	0.25	0.91	0.39	1.41	1.13		
		5/8	10	40	63.5	68.3	42.9		50.8	25.4			16.0	7.9		23.1	9.9	35.8	28.7		
				1.850	3.13	3.44	2.19	0.26	2.63	1.38	0.69	25/32	0.88	0.44	0.31	1.05	0.5	1.74	1.31	5GB	
4U5GB8-08 x		1/2	8	47	79.5	87.4	55.6		66.8	34.9	17.5		22.4	11.2		26.7	12.7	44.1	33.3		4U204-08 x
4U5GB8-10 x		5/8	10																		4U204-10 x
4U5GB8-12 x		3/4	12																		4U204-12 x
4U5GB8-20M x	20M																				4U204-20M x
				2.047	3.13	3.56	2.19	0.26	2.63	1.38	0.69	25/32	0.88	0.44	0.31	1.06	0.56	1.75	1.5	5GC	
				52	79.5	90.4	55.6		66.8	34.9	17.5		22.4	11.2		26.9	14.2	44.4	38.1		
4U5GC8-25M x	25M																				4U205-25M x
4U5GC8-16 x		1	16																		4U205-16 x
				2.441	4.13	4.31	2.69	0.26	3.5	1.38	0.69	25/32	1	0.5	0.31	1.19	0.63	1.88	1.75	5GD	
				62	104.9	109.5	68.3		88.9	34.9	17.5		25.4	12.7		30.2	16.0	47.7	44.5		
4U5GD8-30M x	30M																				4U206-30M x
4U5GD8-19 x		1-3/16	19																		4U206-19 x
4U5GD8-20 x		1-1/4	20																		4U206-20 x
				2.835	4.13	4.5	2.69	0.26	3.5	1.38	0.69	25/32	1	0.5	0.31	1.27	0.69	1.96	2.19	5GE	
4U5GE8-20 x		1-1/4	20	72	104.9	114.3	68.3		88.9	34.9	17.5		25.4	12.7		32.3	17.5	49.7	55.6		4U207-20 x
4U5GE8-22 x		1-3/8	22																		4U207-22 x
4U5GE8-35M x	35M																				4U207-35M x
4U5GE8-23 x		1-7/16	23																		4U207-23 x
				3.150	4.75	5.38	3.25	0.32	4	1.63	0.81	29/32	1.16	0.66	0.38	1.37	0.75	2.18	2.37	5GF	
4U5GF8-24 x		1-1/2	24	80	120.7	136.7	82.6		101.6	41.3	20.6		29.5	16.8		34.8	19.1	55.4	60.2		4U208-24 x
4U5GF8-40M x	40M																				4U208-40M x
				3.346	4.75	5.44	3.25	0.32	4	1.63	0.81	29/32	1.16	0.66	0.38	1.37	0.75	2.18	2.5	5GG	
				85	120.7	138.2	82.6		101.6	41.3	20.6		29.5	16.8		34.8	19.1	55.4	63.5		
4U5GG8-28 x		1-3/4	28																		4U209-28 x
				3.543	4.75	5.5	3.25	0.32	4	1.63	0.81	29/32	1.16	0.66	0.38	1.5	0.75	2.31	2.75	5GH	
				90	120.7	139.7	82.6		101.6	41.3	20.6		29.5	16.8		38.1	19.1	58.7	69.9		
4U5GH8-31 x		1-15/16	31																		4U210-31 x
4U5GH8-50M x	50M																				4U210-50M x
4U5GH8-32 x		2	32																		4U210-32 x
4U5GI8-32 x		2	32	3.937	5.38	6.13	3.63	0.32	4.44	1.75	0.88	1-1/32	1.28	0.69	0.44	1.72	0.87	2.60	3	5GI	4U211-32 x
				100	136.7	155.7	92.2		112.8	44.5	22.2		32.5	17.5		43.7	22.1	65.9	76.2		
4U5GI8-35 x		2-3/16	35																		4U211-35 x
				4.331	5.75	6.69	3.88	0.32	4.94	1.75	0.88	1-1/32	1.28	0.69	0.44	1.84	1	2.72	3.32	5GJ	
				110	146.1	169.9	98.6		125.5	44.5	22.2		32.5	17.5		46.7	25.4	69.0	84.3		
4U5GJ8-39 x		2-7/16	39																		4U212-39 x
				4.921	6.38	7.38	4.31	0.38	5.5	2	1.00	1-9/32	1.5	0.75	0.5	1.94	1.19	2.94	4.02	5GK	
				125	162.1	187.5	109.5		139.7	50.8	25.4		38.1	19.1		49.3	30.2	74.7	102.1		
4U5GK8-44 x		2-3/4	44																		4U214-44 x
				5.128	6.75	7.69	4.44	0.38	5.88	2	1.00	1-9/32	1.5	0.75	0.5	2.15	1.31	3.15	4.02	5GL	
				130	171.5	195.3	112.8		149.4	50.8	25.4		38.1	19.1		54.6	33.3	80.0	102.1		
4U5GL8-47 x		2-15/16	47																		4U215-47 x
4U5GL8-75M x	75M																				4U215-75M x
4U5GL8-48 x		3	48																		4U215-48 x

X indicates a 2-letter designation for lube & seals
G = food grade grease
F = food grade EPL
Other alpha - refer to page 3
X = standard configuration
O = open (no seal or flinger)
Others - refer to page 3
Example: GX = food grade grease with standard seals & flingers

Stainless Ball Solution® Take Up Bearing, Wide

CHOICE

Eccentric lock stainless ball bearing Series “4U”
Take up bearing pattern Series “7”
Stainless housing Series “A”



More Sizes / Styles
Inserts pgs F-5 to F-9
Eccentric inserts in SS or KG: pgs F-10 to F-34
QuiKlean® eccentric: pgs F-34 to F-47
Set screw inserts in SS or KG: pgs F-48 to F-72
QuiKlean® set screw: pgs F-72 to F-85

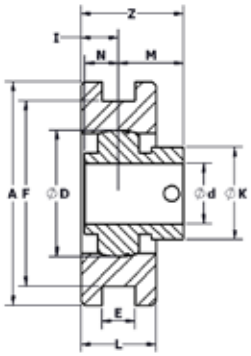

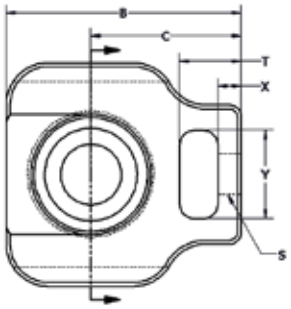

Stainless Housing

“x” indicates a 2-letter designation referring to lube & seals

MOUNTED BEARING PART NUMBER	d			Sphere OD size								Hole size				Brg c/l to front	Brg c/l to back	Overall LTB of brg (I+M)	Brg collar size	Housing	Ball bearing PN
	mm	in	16th	D	A	B	C	E	F	L	I	S	T	X	Y	M	N	Z	K	PN	WIDE ECC
				1.575	3	3.13	2	0.42	2.5	0.97	0.49	17/32	0.81	0.31	1.25	0.91	0.39	1.40	1.13	7AA	
4U7AA8-08 x		1/2	8	40	76.2	79.5	50.8	10.7	63.5	24.6	12.3		20.6	7.9	31.8	23.1	9.9	35.4	28.7		4U203-08 x
4U7AA8-10 x		5/8	10																		4U203-10 x
				1.850	3.63	3.69	2.38	0.54	3	1.22	0.61	21/32	1	0.38	1.44	1.05	0.5	1.66	1.31	7AB	
4U7AB8-08 x		1/2	8	47	92.2	93.7	60.5	13.7	76.2	31.0	15.5		25.4	9.7	36.6	26.7	12.7	42.2	33.3		4U204-08 x
4U7AB8-10 x		5/8	10																		4U204-10 x
4U7AB8-12 x		3/4	12																		4U204-12 x
4U7AB8-20M x	20M																				4U204-20M x
				2.047	3.63	3.81	2.44	0.54	3	1.22	0.61	21/32	1	0.38	1.44	1.06	0.56	1.67	1.5	7AC	
				52	92.2	96.8	62.0	13.7	76.2	31.0	15.5		25.4	9.7	36.6	26.9	14.2	42.4	38.1		
4U7AC8-25M x	25M																				4U205-25M x
4U7AC8-16 x		1	16																		4U205-16 x
				2.441	4.13	4.38	2.75	0.54	3.5	1.47	0.74	25/32	1.16	0.38	1.63	1.19	0.63	1.93	1.75	7AD	
				62	104.9	111.3	69.9	13.7	88.9	37.3	18.7		29.5	9.7	41.4	30.2	16.0	48.9	44.5		
4U7AD8-30M x	30M																				4U206-30M x
4U7AD8-19 x		1-3/16	19																		4U206-19 x
4U7AD8-20 x		1-1/4	20																		4U206-20 x
				2.835	4.13	4.81	3	0.54	3.5	1.47	0.74	25/32	1.16	0.38	1.63	1.27	0.69	2.01	2.19	7AE	
4U7AE8-20 x		1-1/4	20	72	104.9	122.2	76.2	13.7	88.9	37.3	18.7		29.5	9.7	41.4	32.3	17.5	50.9	55.6		4U207-20 x
4U7AE8-22 x		1-3/8	22																		4U207-22 x
4U7AE8-35M x	35M																				4U207-35M x
4U7AE8-23 x		1-7/16	23																		4U207-23 x
				3.150	4.5	5.5	3.44	0.7	4	1.88	0.94	1-1/16	1.5	0.56	1.94	1.37	0.75	2.31	2.37	7AF	
4U7AF8-24 x		1-1/2	24	80	114.3	139.7	87.4	17.8	101.6	47.8	23.9		38.1	14.2	49.3	34.8	19.1	58.7	60.2		4U208-24 x
4U7AF8-40M x	40M																				4U208-40M x
				3.346	4.63	5.69	3.5	0.7	4	1.88	0.94	1-1/16	1.5	0.56	1.94	1.37	0.75	2.31	2.5	7AG	
				85	117.6	144.5	88.9	17.8	101.6	47.8	23.9		38.1	14.2	49.3	34.8	19.1	58.7	63.5		
4U7AG8-28 x		1-3/4	28																		4U209-28 x
				3.543	4.75	5.81	3.56	0.7	4	1.88	0.94	1-1/16	1.5	0.56	1.94	1.5	0.75	2.44	2.75	7AH	
				90	120.7	147.6	90.4	17.8	101.6	47.8	23.9		38.1	14.2	49.3	38.1	19.1	62.0	69.9		
4U7AH8-31 x		1-15/16	31																		4U210-31 x
4U7AH8-50M x	50M																				4U210-50M x
4U7AH8-32 x		2	32																		4U210-32 x
4U7AI8-32 x		2	32	3.937	5.88	7	4.5	1.07	5.13	1.97	0.99	1-5/16	1.97	0.72	2.5	1.72	0.87	2.71	3	7AI	4U211-32 x
				100	149.4	177.8	114.3	27.2	130.3	50.0	25.0		50.0	18.3	63.5	43.7	22.1	68.7	76.2		
4U7AI8-35 x		2-3/16	35																		4U211-35 x
				4.331	5.88	7.5	4.69	1.07	5.13	1.97	0.99	1-5/16	1.97	0.72	2.5	1.84	1	2.83	3.32	7AJ	
				110	149.4	190.5	119.1	27.2	130.3	50.0	25.0		50.0	18.3	63.5	46.7	25.4	71.8	84.3		
4U7AJ8-39 x		2-7/16	39																		4U212-39 x
				4.921	6.69	8.88	5.38	1.07	5.94	1.97	0.99	1-9/16	2.31	0.81	2.88	1.94	1.19	2.93	4.02	7AK	
				125	169.9	225.6	136.7	27.2	150.9	50.0	25.0		58.7	20.6	73.2	49.3	30.2	74.3	102.1		
4U7AK8-44 x		2-3/4	44																		4U214-44 x
				5.128	6.69	9.13	5.5	1.07	5.94	1.97	0.99	1-9/16	2.31	0.81	2.88	2.15	1.31	3.14	4.02	7AL	
				130	169.9	231.9	139.7	27.2	150.9	50.0	25.0		58.7	20.6	73.2	54.6	33.3	79.6	102.1		
4U7AL8-47 x		2-15/16	47																		4U215-47 x
4U7AL8-75M x	75M																				4U215-75M x
4U7AL8-48 x		3	48																		4U215-48 x

X indicates a 2-letter designation for lube & seals

G = food grade grease
F = food grade EPL
Other alpha - refer to page 3
X = standard configuration
O = open (no seal or flinger)
Others - refer to page 3

Example: GX = food grade grease with standard seals & flingers

Stainless Ball Solution®
Take Up Bearing, Wide

CHOICE

Eccentric lock stainless ball bearing Series “4U”
Take up bearing pattern Series “7”
Polymer housing Series “G”



More Sizes / Styles
Inserts pgs F-5 to F-9
Eccentric inserts in SS or KG: pgs F-10 to F-34
QuiKlean® eccentric: pgs F-34 to F-47
Set screw inserts in SS or KG: pgs F-48 to F-72
QuiKlean® set screw: pgs F-72 to F-85

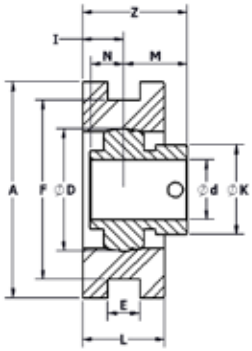

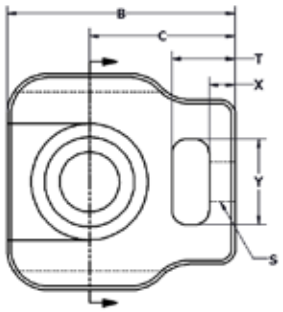

Polymer Housing

“x” indicates a 2-letter designation referring to lube & seals

MOUNTED BEARING PART NUMBER	d			Sphere OD size								Hole size					Brg c/l to front	Brg c/l to back	Overall LTB of brg (I+M)	Brg collar size	Housing PN	Ball bearing PN
	mm	in	16th	D	A	B	C	E	F	L	I	S	T	X	Y	M	N	Z	K		WIDE ECC
		1/2	8	1.58	3	3.13	2	0.42	2.5			17/32	0.88	0.38	1.25	0.91	0.39	1.47	1.13		
		5/8	10	40.1	76.2	79.5	50.8	10.7	63.5				22.4	9.7	31.8	23.1	9.9	37.4	28.7		
				1.85	3.63	3.69	2.38	0.54	3	1.38	0.69	21/32	1.06	0.44	1.44	1.05	0.5	1.74	1.31	7GB	
4U7GB8-08 x		1/2	8	47.0	92.2	93.7	60.5	13.7	76.2	35.1	17.5		26.9	11.2	36.6	26.7	12.7	44.2	33.3		4U204-08 x
4U7GB8-10 x		5/8	10																		4U204-10 x
4U7GB8-12 x		3/4	12																		4U204-12 x
4U7GB8-20M x	20M																				4U204-20M x
				2.05	3.63	3.81	2.44	0.54	3	1.38	0.69	21/32	1.06	0.44	1.44	1.06	0.56	1.75	1.5	7GC	
				52.1	92.2	96.8	62.0	13.7	76.2	35.1	17.5		26.9	11.2	36.6	26.9	14.2	44.5	38.1		
4U7GC8-25M x	25M																				4U205-25M x
4U7GC8-16 x		1	16																		4U205-16 x
				2.44	4.13	4.38	2.75	0.54	3.5	1.63	0.81	25/32	1.22	0.44	1.63	1.19	0.63	2.00	1.75	7GD	
				62.0	104.9	111.3	69.9	13.7	88.9	41.3	20.6		31.0	11.2	41.4	30.2	16.0	50.9	44.5		
4U7GD8-30M x	30M																				4U206-30M x
4U7GD8-19 x		1-3/16	19																		4U206-19 x
4U7GD8-20 x		1-1/4	20																		4U206-20 x
				2.84	4.13	4.81	3	0.54	3.5	1.63	0.81	25/32	1.22	0.44	1.63	1.27	0.69	2.08	2.19	7GE	
4U7GE8-20 x		1-1/4	20	72.1	104.9	122.2	76.2	13.7	88.9	41.3	20.6		31.0	11.2	41.4	32.3	17.5	52.9	55.6		4U207-20 x
4U7GE8-22 x		1-3/8	22																		4U207-22 x
4U7GE8-35M x	35M																				4U207-35M x
4U7GE8-23 x		1-7/16	23																		4U207-23 x
				3.15	4.5	5.5	3.44	0.69	4	1.88	0.94	1-1/16	1.5	0.56	1.94	1.37	0.75	2.31	2.37	7GF	
4U7GF8-24 x		1-1/2	24	80.0	114.3	139.7	87.4	17.5	101.6	47.8	23.9		38.1	14.2	49.3	34.8	19.1	58.7	60.2		4U208-24 x
4U7GF8-40M x	40M																				4U208-40M x
				3.35	4.63	5.69	3.5	0.7	4	1.88	0.94	1-1/16	1.5	0.56	1.94	1.37	0.75	2.31	2.5	7GG	
				85.1	117.6	144.5	88.9	17.8	101.6	47.8	23.9		38.1	14.2	49.3	34.8	19.1	58.7	63.5		
4U7GG8-28 x		1-3/4	28																		4U209-28 x
				3.54	4.75	5.81	3.56	0.7	4	1.88	0.94	1-1/16	1.5	0.56	1.94	1.5	0.75	2.44	2.75	7GH	
				89.9	120.7	147.6	90.4	17.8	101.6	47.8	23.9		38.1	14.2	49.3	38.1	19.1	62.0	69.9		
4U7GH8-31 x		1-15/16	31																		4U210-31 x
4U7GH8-50M x	50M																				4U210-50M x
4U7GH8-32 x		2	32																		4U210-32 x
4U7GI8-32 x		2	32	3.94	5.88	7.5	4.69	1.07	5.13	2.5	1.25	1-5/16	1.97	0.72	2.5	1.72	0.87	2.97	3	7GI	4U211-32 x
				100.1	149.4	190.5	119.1	27.2	130.3	63.5	31.8		50.0	18.3	63.5	43.7	22.1	75.4	76.2		
4U7GI8-35 x		2-3/16	35																		4U211-35 x
				4.33	5.88	7.5	4.69	1.07	5.13	2.5	1.25	1-5/16	1.97	0.72	2.5	1.84	1	3.09	3.32	7GJ	
				110.0	149.4	190.5	119.1	27.2	130.3	63.5	31.8		50.0	18.3	63.5	46.7	25.4	78.5	84.3		
4U7GJ8-39 x		2-7/16	39																		4U212-39 x
				4.92	6.69	8.88	5.38	1.07	5.94	2.75	1.38	1-9/16	2.31	0.81	2.88	1.94	1.19	3.32	4.02	7GK	
				125.0	169.9	225.6	136.7	27.2	150.9	69.9	34.9		58.7	20.6	73.2	49.3	30.2	84.2	102.1		
4U7GK8-44 x		2-3/4	44																		4U214-44 x
				5.12	6.69	9.13	5.5	1.07	5.94	2.75	1.38	1-9/16	2.31	0.81	2.88	2.15	1.31	3.53	4.02	7GL	
				130.0	169.9	231.9	139.7	27.2	150.9	69.9	34.9		58.7	20.6	73.2	54.6	33.3	89.5	102.1		
4U7GL8-47 x		2-15/16	47																		4U215-47 x
4U7GL8-75M x	75M																				4U215-75M x
4U7GL8-48 x		3	48																		4U215-48 x

X indicates a 2-letter designation for lube & seals

G = food grade grease
F = food grade EPL
Other alpha - refer to page 3
X = standard configuration
O = open (no seal or flinger)
Others - refer to page 3

Example: GX = food grade grease with standard seals & flingers

Stainless Ball Solution® Piloted Flange Bearing

CHOICE

Eccentric lock stainless ball bearing Series “4U”
Piloted flange pattern Series “24”
Stainless housing Series “A”



More Sizes / Styles
Inserts pgs F-5 to F-9
Eccentric inserts in SS or KG: pgs F-10 to F-34
QuiKlean® eccentric: pgs F-34 to F-47
Set screw inserts in SS or KG: pgs F-48 to F-72
QuiKlean® set screw: pgs F-72 to F-85

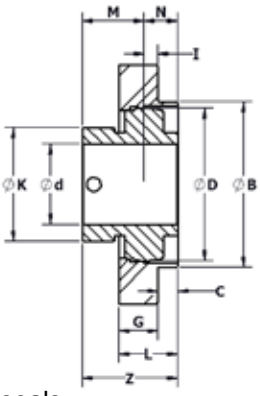

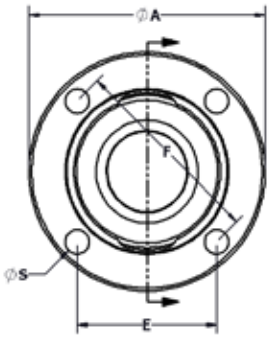

Stainless Housing

“x” indicates a 2-letter designation referring to lube & seals

MOUNTED BEARING PART NUMBER	d			Sphere OD size								Sph depth	Bolt size	Brg c/l to front	Brg c/l to back	Overall LTB of brg (I+M)	Brg collar size	Housing PN	Ball bearing PN
	mm	in	16th	D	A	B	C	E	F	G	L	I	S	M	N	Z	K		WIDE ECC
				2.047	4.38	3	0.38	2.56	3.63	0.81	1.19	0.34	3/8	1.06	0.56	1.78	1.5	24AC	
				52	111.1	76.2	9.5	65.1	92.1	20.6	30.2	8.7		26.9	14.2	45.2	38.1		
4U24AC8-25M x	25M																		4U205-25M x
4U24AC8-16 x		1	16																4U205-16 x
				2.441	4.38	3	0.38	2.56	3.63	0.88	1.25	0.34	3/8	1.19	0.63	1.90	1.75	24AD	
				62	111.1	76.2	9.5	65.1	92.1	22.2	31.8	8.7		30.2	16.0	48.4	44.5		
4U24AD8-30M x	30M																		4U206-30M x
4U24AD8-19 x		1-3/16	19																4U206-19 x
4U24AD8-20 x		1-1/4	20																4U206-20 x
				2.835	5	3.38	0.38	2.92	4.13	0.88	1.25	0.33	7/16	1.27	0.69	1.98	2.19	24AE	
4U24AE8-20 x		1-1/4	20	72	127.0	85.7	9.5	74.1	104.8	22.2	31.8	8.4		32.3	17.5	50.2	55.6		4U207-20 x
4U24AE8-22 x		1-3/8	22																4U207-22 x
4U24AE8-35M x	35M																		4U207-35M x
4U24AE8-23 x		1-7/16	23																4U207-23 x
				3.150	5.25	3.63	0.44	3.09	4.38	0.88	1.31	0.31	7/16	1.37	0.75	2.12	2.37	24AF	
4U24AF8-24 x		1-1/2	24	80	133.4	92.1	11.1	78.6	111.1	22.2	33.4	7.9		34.8	19.1	53.9	60.2		4U208-24 x
4U24AF8-40M x	40M																		4U208-40Mx
				3.346	5.25	3.63	0.44	3.09	4.38	0.88	1.31	0.31	1/2	1.37	0.75	2.12	2.5	24AG	
				85	133.4	92.1	11.1	78.6	111.1	22.2	33.4	7.9		34.8	19.1	53.9	63.5		
4U24AG8-28 x		1-3/4	28																4U209-28 x
				3.346	5.75	4.00	0.44	3.36	4.75	1.00	1.44	0.34	1/2	1.37	0.75	2.12	2.5	24AG-DSC	
				85	146.1	101.6	11.1	85.3	120.7	25.4	36.5	8.7		34.8	19.1	53.9	63.5		
		1-15/16	31																
4U24AG-DSC8-28 x	50M																		4U209-28 x
4U24AG-DSC8-45M x		2	32																4U209-45M x
		2	32	3.543	6.00	4.25	0.63	3.62	5.13	0.88	1.5	0.24	1/2	1.5	0.75	2.36	2.75	24AH	
				90	152.4	108.0	15.9	92.0	130.2	22.2	38.1	6.0		38.1	19.1	60.0	69.9		
4U24AH8-31 x		2-3/16	35																4U210-31 x
4U24AH8-50M x																			4U210-50M x
4U24AH8-32 x																			4U210-32 x
4U24AI8-32 x				3.937	6.38	4.5	0.63	3.80	5.38	0.88	1.5	0.19	1/2	1.72	0.87	2.53	3	24AI	4U211-32 x
		2-7/16	39	100	161.9	114.3	15.9	96.5	136.5	22.2	38.1	4.8		43.7	22.1	64.3	76.2		
4U24AI8-35 x																			4U211-35 x
				4.331	7.13	5	0.88	4.24	6	1.00	1.88	0.19	9/16	1.84	1	2.91	3.32	24AJ	
		2-3/4	44	110	181.0	127.0	22.2	107.8	152.4	25.4	47.6	4.7		46.7	25.4	73.8	84.3		
4U24AJ8-39 x																			4U212-39 x
				4.921	7.63	5.5	1.00	4.60	6.5	1.00	2	0.11	9/16	1.94	1.19	3.04	4.02	24AK	
				125	193.7	139.7	25.4	116.7	165.1	25.4	50.8	2.7		49.3	30.2	77.3	102.1		
4U24AK8-44 x		2-15/16	47																4U214-44 x
	75M			5.128	8.75	6.38	1.13	5.30	7.5	1.00	2.13	0.12	11/16	2.15	1.31	3.40	4.02	24AL	
		3	48	130	222.3	161.9	28.6	134.7	190.5	25.4	54.0	3.1		54.6	33.3	86.3	102.1		
		2-3/4	44																
		2-13/16	45																
4U24AL8-47 x		2-15/16	47																4U215-47 x
4U24AL8-75M x	75																		4U215-75M x
4U24AL8-48 x		3	48																4U215-48 x

X indicates a 2-letter designation for lube & seals
G = food grade grease
F = food grade EPL
Other alpha - refer to page 3
X = standard configuration
O = open (no seal or flinger)
Others - refer to page 3
Example: GX = food grade grease with standard seals & flingers

Stainless Ball Solution® Piloted Flange Bearing

CHOICE

Eccentric lock stainless ball bearing Series "4U"
Piloted flange pattern Series "24"
Polymer housing Series "G"



More Sizes / Styles
Inserts pgs F-5 to F-9
Eccentric inserts in SS or KG: pgs F-10 to F-34
QuiKlean® eccentric: pgs F-34 to F-47
Set screw inserts in SS or KG: pgs F-48 to F-72
QuiKlean® set screw: pgs F-72 to F-85

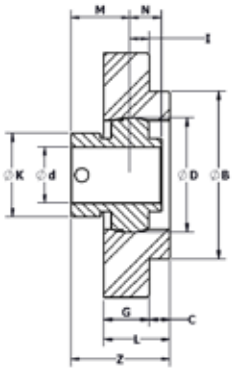

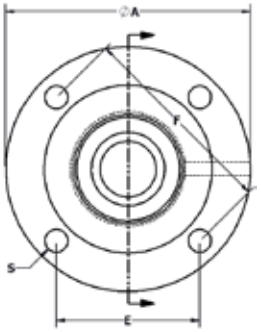

Polymer Housing

"x" indicates a 2-letter designation referring to lube & seals

MOUNTED BEARING PART NUMBER	d			Sphere OD size								Sph depth	Bolt size	Brg c/l to front	Brg c/l to back	Overall LTB of brg (I+M)	Brg collar size	Housing PN	Ball bearing PN
	mm	in	16th	D	A	B	C	E	F	G	L	I	S	M	N	Z	K		WIDE ECC
				2.047	4.38	3	0.38	2.56	3.63	0.81	1.19	0.34	3/8	1.06	0.56	1.78	1.5	24GC	
				52	111.1	76.2	9.5	65.1	92.1	20.6	30.2	8.7		26.9	14.2	45.2	38.1		
4U24GC8-25M x	25M																		4U205-25M x
4U24GC8-16 x		1	16																4U205-16 x
				2.441	4.38	3	0.38	2.56	3.63	0.88	1.25	0.34	3/8	1.19	0.63	1.90	1.75	24GD	
				62	111.1	76.2	9.5	65.1	92.1	22.2	31.8	8.7		30.2	16.0	48.4	44.5		
4U24GD8-30M x	30M																		4U206-30M x
4U24GD8-19 x		1-3/16	19																4U206-19x
4U24GD8-20 x		1-1/4	20																4U206-20 x
				2.835	5	3.38	0.38	2.92	4.13	0.88	1.25	0.33	7/16	1.27	0.69	1.98	2.19	24GE	
4U24GE8-20 x		1-1/4	20	72	127.0	85.7	9.5	74.1	104.8	22.2	31.8	8.4		32.3	17.5	50.2	55.6		4U207-20 x
4U24GE8-22 x		1-3/8	22																4U207-22 x
4U24GE8-35M x	35M																		4U207-35M x
4U24GE8-23 x		1-7/16	23																4U207-23 x
				3.150	5.25	3.63	0.44	3.09	4.37	0.88	1.31	0.31	7/16	1.37	0.75	2.12	2.37	24GF	
4U24GF8-24 x		1-1/2	24	80	133.4	92.1	11.1	78.6	111.0	22.2	33.4	7.9		34.8	19.1	53.9	60.2		4U208-24 x
4U24GF8-40M x	40M																		4U208-40M x
				3.346	5.75	4.00	0.44	3.36	4.75	0.88	1.31	0.31	1/2	1.37	0.75	2.12	2.5	24GG-DSC	
				85	146.1	101.6	11.1	85.3	120.7	22.2	33.4	7.9		34.8	19.1	53.9	63.5		
4U24GG-DSC8-28 x		1-3/4	28																4U209-28 x
				3.346	5.25	3.63	0.44	3.09	4.38	0.88	1.31	0.31	1/2	1.37	0.75	2.12	2.5	24GG	
				85	133.4	92.1	11.1	78.6	111.1	22.2	33.4	7.9		34.8	19.1	53.9	63.5		
		1-15/16	31																
4U24GG8-28 x	50M																		4U209-28 x
4U24GG8-45M x		2	32																4U209-45M x
		2	32	3.543	6.06	4.25	0.63	3.62	5.13	0.88	1.5	0.24	1/2	1.5	0.75	2.36	2.75	24GH	
				90	153.9	108.0	15.9	92.0	130.2	22.2	38.1	6.0		38.1	19.1	60.0	69.9		
4U24GH8-31 x		2-3/16	35																4U210-31 x
4U24GH8-50M x																			4U210-50M x
4U24GH8-32 x																			4U210-32 x
4U24GI8-32 x				3.937	6.38	4.5	0.63	3.80	5.38	0.88	1.5	0.19	1/2	1.72	0.87	2.53	3	24GI	4U211-32 x
		2-7/16	39	100	161.9	114.3	15.9	96.5	136.5	22.2	38.1	4.8		43.7	22.1	64.3	76.2		
4U24GI8-35 x																			4U211-35 x
				4.331	7.13	5	0.88	4.24	6	1.00	1.88	0.19	9/16	1.84	1	2.91	3.32	24GJ	
		2-3/4	44	110	181.0	127.0	22.2	107.8	152.4	25.4	47.6	4.7		46.7	25.4	73.8	84.3		
4U24GJ8-39 x																			4U212-39 x
				4.921	7.63	5.5	1.00	4.60	6.5	1.00	2	0.11	9/16	1.94	1.19	3.04	4.02	24GK	
				125	193.7	139.7	25.4	116.7	165.1	25.4	50.8	2.7		49.3	30.2	77.3	102.1		
4U24GK8-44 x		2-15/16	47																4U214-44 x
	75M			5.128	8.75	6.38	1.13	5.30	7.5	1.00	2.13	0.12	11/16	2.15	1.31	3.40	4.02	24GL	
		3	48	130	222.3	161.9	28.6	134.7	190.5	25.4	54.0	3.1		54.6	33.3	86.3	102.1		
		2-3/4	44																
		2-13/16	45																
4U24GL8-47 x		2-15/16	47																4U215-47 x
4U24GL8-75M x	75																		4U215-75M x
4U24GL8-48 x		3	48																4U215-48 x

X indicates a 2-letter designation for lube & seals

G = food grade grease
F = food grade EPL
Other alpha - refer to page 3
X = standard configuration
O = open (no seal or flinger)
Others - refer to page 3

Example: GX = food grade grease with standard seals & flingers

Stainless Ball Solution® Four-Bolt Flange

CHOICE

Eccentric lock stainless ball bearing Series "4U"
Standard four-bolt pattern Series "4_-01"
Stainless housing Series "A"

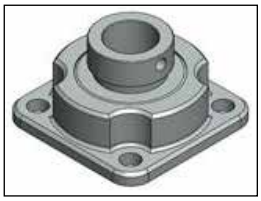

More Sizes / Styles
Inserts pgs F-5 to F-9
Eccentric inserts in SS or KG: pgs F-10 to F-34
QuiKlean® eccentric: pgs F-34 to F-47
Set screw inserts in SS or KG: pgs F-48 to F-72
QuiKlean® set screw: pgs F-72 to F-85

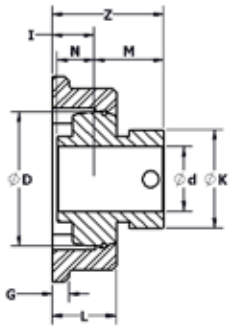

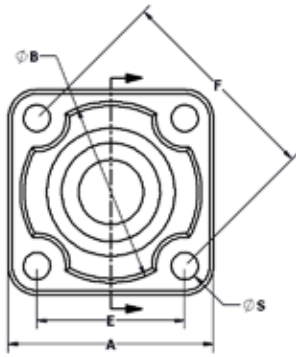

Stainless Housing

"x" indicates a 2-letter designation referring to lube & seals

MOUNTED BEARING PART NUMBER	d			Sphere OD size							Sph depth	Bolt size	Brg c/l to front	Brg c/l to back	Overall LTB of brg (I+M)	Brg collar size	Housing PN	Ball bearing PN
	mm	in	16th	D	A	B	E	F	G	L	I	S	M	N	Z	K		SETSCREW
				2.047	3.13	2.76	2.25	3.18	0.25	0.97	0.64	3/8"	1.06	0.56	1.70	1.5	4AC-01	
				52	79.5	70.1	57.2	80.8	6.4	24.6	16.3		26.9	14.2	43.2	38.1		
4U4AC-018-25M x	25M																	4U205-25M x
4U4AC-018-16 x		1	16															4U205-16x

Stainless Ball Solution® Four-Bolt Flange (QuiKlean®) with 5/8" Stand-off

CHOICE

Eccentric lock stainless ball bearing Series "4U"
Standard four-bolt pattern Series "4_-01"
Stainless housing Series "A"
5/8" stand-off above base "QK"

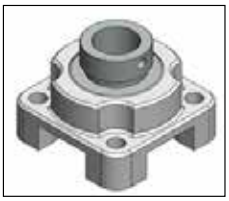

More Sizes / Styles
Inserts pgs F-5 to F-9
Eccentric inserts in SS or KG: pgs F-10 to F-34
QuiKlean® eccentric: pgs F-34 to F-47
Set screw inserts in SS or KG: pgs F-48 to F-72
QuiKlean® set screw: pgs F-72 to F-85

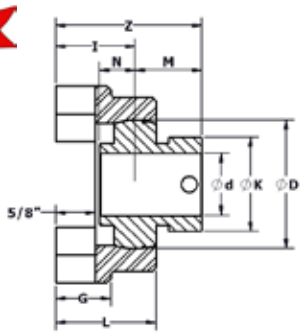

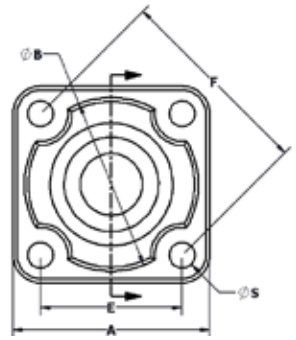

Stainless Housing

"x" indicates a 2-letter designation referring to lube & seals

MOUNTED BEARING PART NUMBER	d			Sphere OD size							Sph depth	Bolt size	Brg c/l to front	Brg c/l to back	Overall LTB of brg (I+M)	Brg collar size	Housing PN	Ball bearing PN
	mm	in	16th	D	A	B	E	F	G	L	I	S	M	N	Z	K		WIDE ECC
				2.047	3.13	2.76	2.25	3.18	0.88	1.60	1.27	3/8"	1.06	0.56	2.33	1.5	4AC-01-QK	
				52	79.5	70.1	57.2	80.8	22.2	40.5	32.1		26.9	14.2	59.1	38.1		
4U4AC-01-QK8-25M x	25M																	4U205-25M x
4U4AC-01-QK8-16 x		1	16															4U205-16 x

QuiKlean® housing with integral standoff is 5/8" above the base of standard units

X indicates a 2-letter designation for lube & seals
G = food grade grease
F = food grade EPL
Other alpha - refer to page 3
X = standard configuration
O = open (no seal or flinger)
Others - refer to page 3
Example: GX = food grade grease with standard seals & flingers

Stainless Ball Solution® Breader Bearing

CLASSIC

Stainless QuiKlean® housing
Assembly includes PA backing plate and stainless ball bearing, either:
- **Food grade solid lubricant (prefix ZJ)**
- **Food grade grease (prefix ZY)**
- **H1 graphite lubricant (prefix ZW)**



More Sizes / Styles
Inserts pgs F-5 to F-9
Eccentric inserts in SS or KG: pgs F-10 to F-34
QuiKlean® eccentric: pgs F-34 to F-47
Set screw inserts in SS or KG: pgs F-48 to F-72
QuiKlean® set screw: pgs F-72 to F-85

"x" indicates a 2-letter designation referring to lube & seals

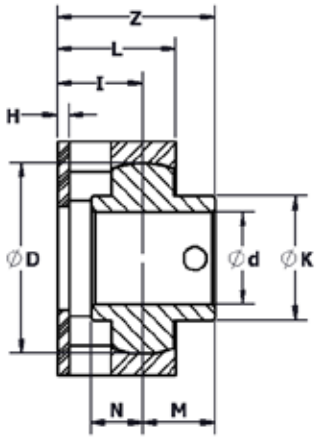

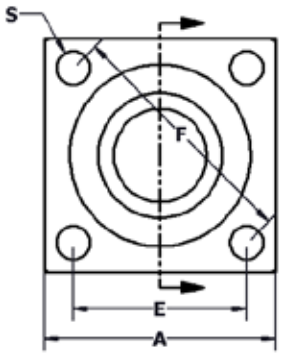

Stainless Housing

MOUNTED BEARING PART NUMBER	d		Sphere OD size							Bolt size	Brg c/l to front	Brg c/l to back	Overall LTB of brg (I+M)	Brg collar size	Standoff	Housing PN	Ball bearing PN
	in	16th	D	A	E	F	H	L	I	S	M	N	Z	K			SETSCREW
ZJZA100-QK8-3/4	3/4	12	2.047	2.5	1.875	2.65	0.13	1.28	0.93	5/16	0.78	0.56	1.71	1.34	0.50 / 12.7	ZA100-QK	4Y205-12FX
ZJZA100-QK8-1	1	16	52	63.5	47.6	67.3	3.2	32.5	23.6		19.8	14.2	43.4	34.0			4Y205-16FX
ZWZA100-QK8-1	1	16															4Y205-16WX
ZYZA100-QK8-1	1	16															4Y205-16GX

Stainless Ball Solution® Breader Bearing

CHOICE

Stainless QuiKlean® housing
Assembly includes PA backing plate and stainless ball bearing with food grade solid lubricant (prefix ZJ)

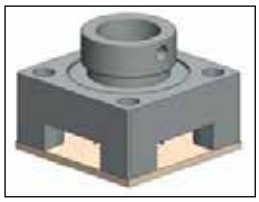

More Sizes / Styles
Inserts pgs F-5 to F-9
Eccentric inserts in SS or KG: pgs F-10 to F-34
QuiKlean® eccentric: pgs F-34 to F-47
Set screw inserts in SS or KG: pgs F-48 to F-72
QuiKlean® set screw: pgs F-72 to F-85

"x" indicates a 2-letter designation referring to lube & seals

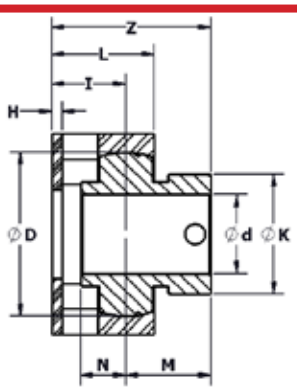

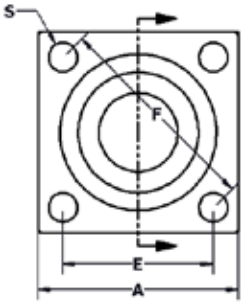

Stainless Housing

MOUNTED BEARING PART NUMBER	d			Sphere OD size							Bolt size	Brg c/l to front	Brg c/l to back	Overall LTB of brg (I+M)	Brg collar size	Housing PN	Ball bearing PN
	mm	in	16th	D	A	E	F	H	L	I	S	M	N	Z	K		WIDE ECC
ZEJZA100-QK8-1		1	16	2.047	2.5	1.875	2.65	0.13	1.28	0.93	5/16	1.06	0.56	1.99	1.5	ZA100-QK	4U205-1FX
				52	63.5	47.6	67.3	3.2	32.5	23.6		26.9	14.2	50.5	38.1		

Stainless Ball Solution® Breader Auger

CLASSIC

For vertical shaft on JBT Breader
Stainless four bolt flange with exclusionary seal and solid lubricant, stainless ball bearing





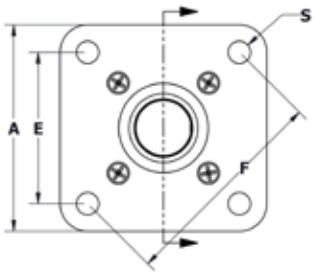

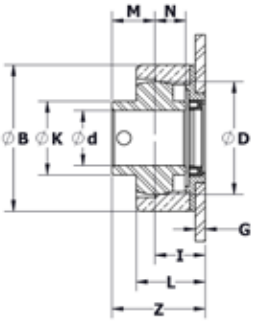

Stainless Housing

X indicates a 2-letter designation for lube & seals
G = food grade grease
F = food grade EPL
Other alpha - refer to page 3
X = standard configuration
O = open (no seal or flinger)
Others - refer to page 3
Example: GX = food grade grease with standard seals & flingers

MOUNTED BEARING PART NUMBER	d		Sphere OD size								Bolt size	Brg c/l to front	Brg c/l to back	Overall LTB of brg (I+M)	Brg collar size	Seal	Housing PN	Ball bearing PN
	in	16th	D	A	B	E	F	G	I	L	S	M	N	Z	K			SETSCREW
ZJZA400-ON8-1	1	16	2.047 52	3.75 95.3	2.66 67.6	2.75 69.9	3.89 98.8	0.18 4.6	0.91 23.12	1.25 31.8	3/8	0.78 19.8	0.56 14.2	1.69 42.3	1.34 34.0	EDT-Glove® C	ZA100-QK	4Y205-16FX

Stainless Ball Solution® Pillow Block (QuiKlean®) with 5/8" Stand-off

Eccentric lock stainless ball bearing Series "4U"
Standard backing height Series "1"
Stainless housing Series "A"
5/8" stand-off above base "QK"

CHOICE



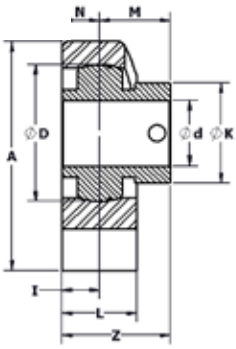

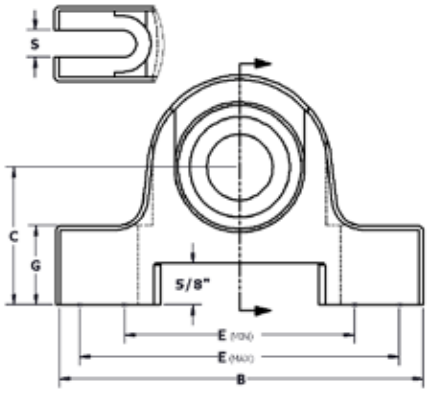

Stainless Housing

More Sizes / Styles
Inserts pgs F-5 to F-9
Eccentric inserts in SS or KG: pgs F-10 to F-34
QuiKlean® eccentric: pgs F-34 to F-47
Set screw inserts in SS or KG: pgs F-48 to F-72
QuiKlean® set screw: pgs F-72 to F-85

"x" indicates a 2-letter designation referring to lube & seals

QK only available on standard height

MOUNTED BEARING PART NUMBER	d			Sphere OD size								Sph. depth	Bolt size	Brg c/l to front	Brg c/l to back	Overall LTB of brg (I+M)	Brg collar size	Housing PN	Ball bearing PN
	mm	in	16th	D	A	B	C	E min	E max	G	L	I	S	M	N	Z	K		WIDE ECC
				2.047	3.438	5.5	2.063	3.44	4.63	1.188	1.13	0.56	3/8	1.06	0.56	1.62	1.5	1AC-QK	
				52	87.3	139.7	52.4	87.4	117.6	30.2	28.7	14.2		26.9	14.2	41.1	38.1		
4U1AC-QK8-25M x	25M																		4U205-25M x
4U1AC-QK8-16 x		1	16																4U205-16 x

QuiKlean® housing with integral standoff is 5/8" above the base of standard units

X indicates a 2-letter designation for lube & seals
G = food grade grease
F = food grade EPL
Other alpha - refer to page 3
X = standard configuration
O = open (no seal or flinger)
Others - refer to page 3
Example: GX = food grade grease with standard seals & flingers

Stainless Ball Solution®
Pillow Block
(QuiKlean®) with 5/8" Stand-off

CHOICE

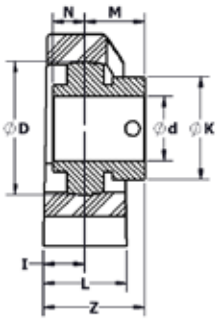

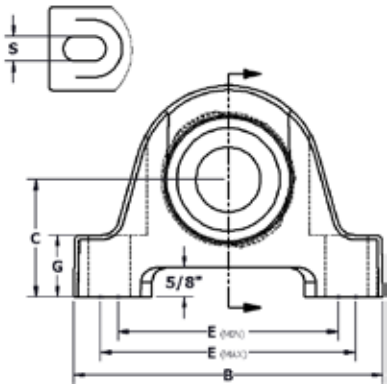

Polymer Housing

Eccentric lock stainless ball bearing Series "4U"
Standard backing height Series "1"
Polymer housing Series "G"
5/8" stand-off above base "QK"



More Sizes / Styles
Inserts pgs F-5 to F-9
Eccentric inserts in SS or KG: pgs F-10 to F-34
QuiKlean® eccentric: pgs F-34 to F-47
Set screw inserts in SS or KG: pgs F-48 to F-72
QuiKlean® set screw: pgs F-72 to F-85

"x" indicates a 2-letter designation referring to lube & seals

QK only available on standard height

MOUNTED BEARING PART NUMBER	d			Sphere OD size									Sph. septh	Bolt size	Brg c/l to front	Brg c/l to back		Overall LTB of brg (I+M)	Brg collar size	Housing PN	Ball bearing PN
	mm	in	16th	D	A	B	C	E min	E max	G	L		I	S	M	N	Z	Z	K		WIDE ECC
				1.575	2.88	5	1.69	2.94	4.06	1.06	1.25		0.63	3/8	0.91	0.39	1.54	1.13	0.97	1AA-QK	
4U1GA-QK8-08 x		1/2	8	40	73.2	127.0	42.9	74.7	103.1	26.9	31.8		15.9		23.1	9.9	39.0	28.7	24.6		4U203-08 x
4U1GA-QK8-10 x		5/8	10																		4U203-10 x
				1.850	3.31	5.27	1.94	3.25	4.38	1.13	1.4		0.69	3/8	1.05	0.5	1.74	1.31	1.14	1AB-QK	
4U1GB-QK8-08 x		1/2	8	47	84.1	133.9	49.3	82.6	111.3	28.6	35.6		17.5		26.7	12.7	44.2	33.3	29.0		4U204-08 x
4U1GB-QK8-10 x		5/8	10																		4U204-10 x
4U1GB-QK8-12 x		3/4	12																		4U204-12 x
4U1GB-QK8-20M x	20M																				4U204-20M x
				2.047	3.56	5.5	2.06	3.44	4.63	1.19	1.52		0.75	3/8	1.06	0.56	1.81	1.5	1.34	1AC-QK	
				52	90.4	139.7	52.3	87.4	117.6	30.2	38.6		19.1		26.9	14.2	46.0	38.1	34.0		
4U1GC-QK8-25M x	25M																				4U205-25M x
4U1GC-QK8-16 x		1	16																		4U205-16 x
				2.441	4	6.25	2.31	4.13	5.13	1.31	1.75		0.88	1/2	1.19	0.63	2.07	1.75	1.59	1AD-QK	
				62	101.6	158.8	58.7	104.9	130.3	33.3	44.5		22.2		30.2	16.0	52.5	44.5	40.4		
4U1GD-QK8-30M x	30M																				4U206-30M x
4U1GD-QK8-19 x		1-3/16	19																		4U206-19 x
4U1GD-QK8-20 x		1-1/4	20																		4U206-20 x
				2.835	4.5	6.56	2.5	4.69	5.44	1.31	1.75		0.88	1/2	1.27	0.69	2.15	2.19	1.84	1AE-QK	
4U1GE-QK8-20 x		1-1/4	20	72	114.3	166.6	63.5	119.1	138.2	33.3	44.5		22.2		32.3	17.5	54.5	55.6	46.7		4U207-20 x
4U1GE-QK8-22 x		1-3/8	22																		4U207-22 x
4U1GE-QK8-35M x	35M																				4U207-35M x
4U1GE-QK8-23 x		1-7/16	23																		4U207-23 x
				3.150	4.94	7.25	2.75	5	6.13	1.38	1.94		0.97	1/2	1.37	0.75	2.34	2.37	2.08	1AF-QK	
4U1GF-QK8-24 x		1-1/2	24	80	125.5	184.2	69.9	127.0	155.7	34.9	49.3		24.6		34.8	19.1	59.4	60.2	52.8		4U208-24 x
4U1GF-QK8-40M x	40M																				4U208-40M x

QuiKlean® housing with integral standoff is 5/8" above the base of standard units

X indicates a 2-letter designation for lube & seals
G = food grade grease
F = food grade EPL
Other alpha - refer to page 3
X = standard configuration
O = open (no seal or flinger)
Others - refer to page 3
Example: GX = food grade grease with standard seals & flingers

Stainless Ball Solution® Tapped Base Pillow Block (QuiKlean®) with 5/8" Stand-off

Eccentric lock stainless ball bearing Series "4U"
Tapped base housing Series "9"
Stainless housing Series "A"
5/8" stand-off above base "QK"

CHOICE



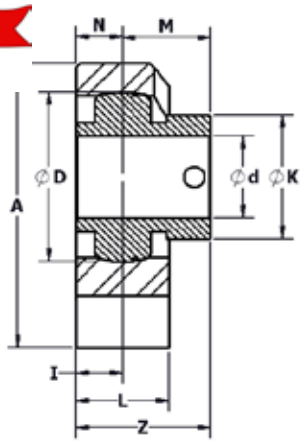

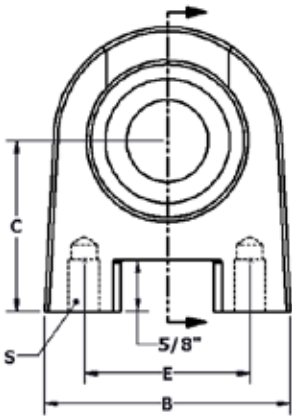

Stainless Housing

More Sizes / Styles
Inserts pgs F-5 to F-9
Eccentric inserts in SS or KG: pgs F-10 to F-34
QuiKlean® eccentric: pgs F-34 to F-47
Set screw inserts in SS or KG: pgs F-48 to F-72
QuiKlean® set screw: pgs F-72 to F-85

"x" indicates a 2-letter designation referring to lube & seals

MOUNTED BEARING PART NUMBER	d			sphere OD size						Sph depth	Bolt size	Brg c/l to front	Brg c/l to back	Overall LTB of brg (I+M)	Brg collar size	Housing PN	Ball bearing PN
	mm	in	16th	D	A	B	C	E	L	I	S	M	N	Z	K		WIDE ECC
				1.575	3.03	2.88	1.94	2	1.13	0.56	3/8-16	0.91	0.39	1.47	1.13	9AA-QK	
4U9AA-QK8-08 x		1/2	8	40	77.0	73.2	49.3	50.8	28.7	14.2		23.1	9.9	37.3	28.7		4U203-08 x
4U9AA-QK8-10 x		5/8	10														4U203-10 x
				1.850	3.16	2.88	1.94	2	1.13	0.56	3/8-16	1.05	0.5	1.61	1.31	9AB-QK	
4U9AB-QK8-08 x		1/2	8	47	80.3	73.2	49.3	50.8	28.7	14.2		26.7	12.7	40.9	33.3		4U204-08 x
4U9AB-QK8-10 x		5/8	10														4U204-10 x
4U9AB-QK8-12 x		3/4	12														4U204-12 x
4U9AB-QK8-20M x	20M																4U204-20M x
				2.047	3.44	3	2.06	2	1.13	0.56	3/8-16	1.06	0.56	1.62	1.5	9AC-QK	
				52	87.4	76.2	52.3	50.8	28.7	14.2		26.9	14.2	41.1	38.1		
4U9AC-QK8-25M x	25M																4U205-25M x
4U9AC-QK8-16 x		1	16														4U205-16 x
				2.441	3.88	4	2.31	3	1.47	0.74	7/16-14	1.19	0.63	1.93	1.75	9AD-QK	
				62	98.6	101.6	58.7	76.2	37.3	18.8		30.2	16.0	49.0	44.5		
4U9AD-QK8-30M x	30M																4U206-30M x
4U9AD-QK8-19 x		1-3/16	19														4U206-19 x
4U9AD-QK8-20 x		1-1/4	20														4U206-20 x
				2.835	4.31	4.25	2.5	3.25	1.47	0.74	1/2-13	1.27	0.69	2.01	2.19	9AE-QK	
4U9AE-QK8-20 x		1-1/4	20	72	109.5	108.0	63.5	82.6	37.3	18.8		32.3	17.5	51.1	55.6		4U207-20 x
4U9AE-QK8-22 x		1-3/8	22														4U207-22 x
4U9AE-QK8-35M x	35M																4U207-35M x
4U9AE-QK8-23 x		1-7/16	23														4U207-23 x
				3.150	4.56	4.63	2.56	3.5	1.63	0.81	1/2-13	1.37	0.75	2.18	2.37	9AF-QK	
4U9AF-QK8-24 x		1-1/2	24	80	115.8	117.6	65.0	88.9	41.4	20.6		34.8	19.1	55.4	60.2		4U208-24 x
4U9AF-QK8-40M x	40M																4U208-40M x

QuiKlean® housing with integral standoff is 5/8" above the base of standard units

X indicates a 2-letter designation for lube & seals
G = food grade grease
F = food grade EPL
Other alpha - refer to page 3
X = standard configuration
O = open (no seal or flinger)
Others - refer to page 3
Example: GX = food grade grease with standard seals & flingers

Stainless Ball Solution® Tapped Base Pillow Block (QuiKlean®) with 5/8" Stand-off

CHOICE

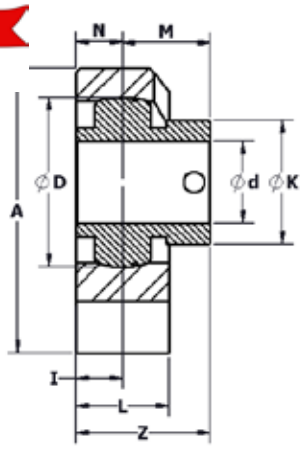

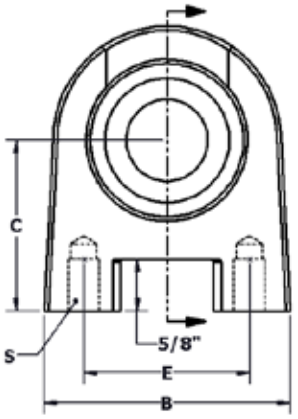

Polymer Housing

Eccentric lock stainless ball bearing Series "4U"
Tapped base housing Series "9"
Polymer housing Series "G"
5/8" stand-off above base "QK"



More Sizes / Styles
Inserts pgs F-5 to F-9
Eccentric inserts in SS or KG: pgs F-10 to F-34
QuiKlean® eccentric: pgs F-34 to F-47
Set screw inserts in SS or KG: pgs F-48 to F-72
QuiKlean® set screw: pgs F-72 to F-85

"x" indicates a 2-letter designation referring to lube & seals

MOUNTED BEARING PART NUMBER	d			Sphere OD size								Brg c/l to front	Brg c/l to back	Overall LTB of brg (I+M)	Brg collar size	Housing PN	Ball bearing PN
	mm	in	16th	D	A	B	C	E	L	I	S	M	N	Z	K		WIDE ECC
				1.575	3.08	2.94	1.94	2	1.12	0.56	3/8-16	0.91	0.39	1.47	1.13	9GA-QK	
4U9GA-QK8-08 x		1/2	8	40	78.2	74.7	49.3	50.8	28.4	14.2		23.1	9.9	37.3	28.7		4U203-08 x
4U9GA-QK8-10 x		5/8	10														4U203-10 x
				1.850	3.2	3.07	1.94	2	1.13	0.56	3/8-16	1.05	0.5	1.61	1.31	9GB-QK	
4U9GB-QK8-08 x		1/2	8	47	81.3	78.0	49.3	50.8	28.7	14.2		26.7	12.7	40.9	33.3		4U204-08 x
4U9GB-QK8-10 x		5/8	10														4U204-10 x
4U9GB-QK8-12 x		3/4	12														4U204-12 x
4U9GB-QK8-20M x	20M																4U204-20M x
				2.047	3.44	3.11	2.06	2	1.16	0.57	3/8-16	1.06	0.56	1.63	1.5	9GC-QK	
				52	87.4	79.0	52.3	50.8	29.5	14.5		26.9	14.2	41.4	38.1		
4U9GC-QK8-25M x	25M																4U205-25M x
4U9GC-QK8-16 x		1	16														4U205-16 x
				2.441	4	4.25	2.31	3	1.63	0.81	7/16-14	1.19	0.63	2.00	1.75	9GD-QK	
				62	101.6	108.0	58.7	76.2	41.4	20.6		30.2	16.0	50.8	44.5		
4U9GD-QK8-30M x	30M																4U206-30M x
4U9GD-QK8-19 x		1-3/16	19														4U206-19 x
4U9GD-QK8-20 x		1-1/4	20														4U206-20 x
				2.835	4.5	4.66	2.5	3.25	1.75	0.88	1/2-13	1.27	0.69	2.15	2.19	9GE-QK	
4U9GE-QK8-20 x		1-1/4	20	72	114.3	118.4	63.5	82.6	44.5	22.4		32.3	17.5	54.6	55.6		4U207-20 x
4U9GE-QK8-22 x		1-3/8	22														4U207-22 x
4U9GE-QK8-35M x	35M																4U207-35M x
4U9GE-QK8-23 x		1-7/16	23														4U207-23 x
				3.150	4.75	4.75	2.56	3.5	1.88	0.94	1/2-13	1.37	0.75	2.31	2.37	9GF-QK	
4U9GF-QK8-24 x		1-1/2	24	80	120.7	120.7	65.0	88.9	47.8	23.9		34.8	19.1	58.7	60.2		4U208-24 x
4U9GF-QK8-40M x	40M																4U208-40M x

QuiKlean® housing with integral standoff is 5/8" above the base of standard units

X indicates a 2-letter designation for lube & seals

G = food grade grease
F = food grade EPL
Other alpha - refer to page 3
X = standard configuration
O = open (no seal or flinger)
Others - refer to page 3

Example: GX = food grade grease with standard seals & flingers

Stainless Ball Solution® Two-Bolt Flange (QuiKlean®) with 5/8" Stand-off

CHOICE

Eccentric lock stainless ball bearing Series "4U"
Standard two-bolt pattern Series "2"
Stainless housing Series "A"
5/8" stand-off above base "QK"



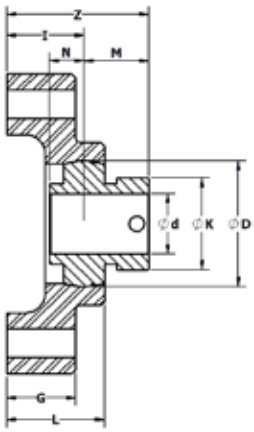

Stainless Housing

More Sizes / Styles
Inserts pgs F-5 to F-9
Eccentric inserts in SS or KG: pgs F-10 to F-34
QuiKlean® eccentric: pgs F-34 to F-47
Set screw inserts in SS or KG: pgs F-48 to F-72
QuiKlean® set screw: pgs F-72 to F-85

"x" indicates a 2-letter designation referring to lube & seals

MOUNTED BEARING PART NUMBER			Sphere OD size						Sph depth	Bolt size	Brg c/l to front	Brg c/l to back	Overall LTB of brg + hsg (I+M)	Brg collar size	Housing PN	Ball bearing PN
	mm	in	16th	D	A	B	E	G	L	I	S	M	N	Z	K	WIDE ECC
				1.575	3.88	2.15	3	1.06	1.47	1.15	3/8"	0.91	0.39	2.06	1.13	2AA-QK	
4U2AA-QK8-08 x		1/2	8	40	98.6	54.6	76.2	27.0	37.3	29.2		23.1	9.9	52.3	28.7		4U203-08 x
4U2AA-QK8-10 x		5/8	10														4U203-10 x
				1.850	4.41	2.42	3.53	1.06	1.58	1.22	3/8"	1.05	0.5	2.27	1.31	2AB-QK	
4U2AB-QK8-08 x		1/2	8	47	112.0	61.5	89.7	27.0	40.1	31.0		26.7	12.7	57.7	33.3		4U204-08 x
4U2AB-QK8-10 x		5/8	10														4U204-10 x
4U2AB-QK8-12 x		3/4	12														4U204-12 x
4U2AB-QK8-20M x	20M																4U204-20M x
				2.047	4.89	2.66	3.89	1.13	1.6	1.16	7/16"	1.06	0.56	2.22	1.5	2AC-QK	
				52	124.2	67.6	98.8	28.6	40.6	29.5		26.9	14.2	56.4	38.1		
4U2AC-QK8-25M x	25M																4U205-25M x
4U2AC-QK8-16 x		1	16														4U205-16 x
				2.441	5.69	3.12	4.6	1.13	1.69	1.28	7/16"	1.19	0.63	2.47	1.75	2AD-QK	
				62	144.5	79.2	116.8	28.6	42.9	32.5		30.2	16.0	62.7	44.5		
4U2AD-QK8-30M x	30M																4U206-30M x
4U2AD-QK8-19 x		1-3/16	19														4U206-19 x
4U2AD-QK8-20 x		1-1/4	20														4U206-20 x
				2.835	6.25	3.62	5.12	1.19	1.85	1.42	1/2"	1.27	0.69	2.69	2.19	2AE-QK	
4U2AE-QK8-20 x		1-1/4	20	72	158.8	91.9	130.0	30.2	47.0	36.1		32.3	17.5	68.3	55.6		4U207-20 x
4U2AE-QK8-22 x		1-3/8	22														4U207-22 x
4U2AE-QK8-35M x	35M																4U207-35M x
4U2AE-QK8-23 x		1-7/16	23														4U207-23 x
				3.150	6.78	4	5.66	1.19	1.87	1.39	1/2"	1.37	0.75	2.76	2.37	2AF-QK	
4U2AF-QK8-24 x		1-1/2	24	80	172.2	101.6	143.8	30.2	47.5	35.3		34.8	19.1	70.1	60.2		4U208-24 x
4U2AF-QK8-40M x	40M																4U208-40M x

QuiKlean® housing with integral standoff is 5/8" above the base of standard units

X indicates a 2-letter designation for lube & seals
G = food grade grease
F = food grade EPL
Other alpha - refer to page 3
X = standard configuration
O = open (no seal or flinger)
Others - refer to page 3
Example: GX = food grade grease with standard seals & flingers

Stainless Ball Solution® Two-Bolt Flange (QuiKlean®) with 5/8" Stand-off

CHOICE

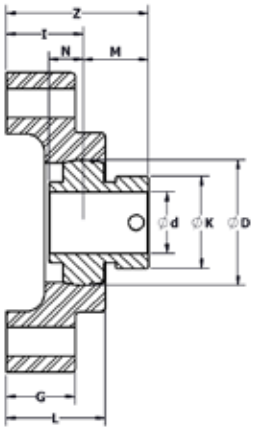

Polymer Housing

Eccentric lock stainless ball bearing Series "4U"
Standard two-bolt pattern Series "2"
Polymer housing Series "G"
5/8" stand-off above base "QK"



More Sizes / Styles
Inserts pgs F-5 to F-9
Eccentric inserts in SS or KG: pgs F-10 to F-34
QuiKlean® eccentric: pgs F-34 to F-47
Set screw inserts in SS or KG: pgs F-48 to F-72
QuiKlean® set screw: pgs F-72 to F-85

"x" indicates a 2-letter designation referring to lube & seals

MOUNTED BEARING PART NUMBER	d			Sphere OD size						Sph depth	Bolt size	Brg c/l to front	Brg c/l to back	Overall LTB of brg (I+M)	Brg collar size	Housing PN	Ball bearing PN
	mm	in	16th	D	A	B	F	G	L	I	S	M	N	Z	K		WIDE ECC
				1.575	3.88	2.15	3	1.06	1.47	1.15	3/8"	0.91	0.39	2.06	1.13	2GA-QK	
4U2GA-QK8-08 x		1/2	8	40	98.6	54.6	76.2	26.9	37.3	29.2		23.1	9.9	52.3	28.7		4U203-08 x
4U2GA-QK8-10 x		5/8	10														4U203-10 x
				1.850	4.41	2.69	3.53	1.06	1.58	1.22	3/8"	1.05	0.5	2.27	1.31	2GB-QK	
4U2GB-QK8-08 x		1/2	8	47	112.0	68.3	89.7	26.9	40.1	31.0		26.7	12.7	57.7	33.3		4U204-08 x
4U2GB-QK8-10 x		5/8	10														4U204-10 x
4U2GB-QK8-12 x		3/4	12														4U204-12 x
4U2GB-QK8-20M x	20M																4U204-20M x
				2.047	4.89	2.93	3.89	1.13	1.62	1.26	7/16"	1.06	0.56	2.32	1.5	2GC-QK	
				52	124.2	74.4	98.8	28.6	41.0	32.0		26.9	14.2	58.9	38.1		
4U2GC-QK8-25M x	25M																4U205-25M x
4U2GC-QK8-16 x		1	16														4U205-16 x
				2.441	5.59	3.625	4.59	1.13	1.69	1.28	7/16"	1.19	0.63	2.47	1.75	2GD-QK	
				62	142.0	92.1	116.6	28.6	42.9	32.5		30.2	16.0	62.7	44.5		
4U2GD-QK8-30M x	30M																4U206-30M x
4U2GD-QK8-19 x		1-3/16	19														4U206-19 x
4U2GD-QK8-20 x		1-1/4	20														4U206-20 x
				2.835	6.25	4	5.12	1.19	1.85	1.42	1/2"	1.27	0.69	2.69	2.19	2GE-QK	
4U2GE-QK8-20 x		1-1/4	20	72	158.8	101.6	130.0	30.2	47.0	36.1		32.3	17.5	68.3	55.6		4U207-20 x
4U2GE-QK8-22 x		1-3/8	22														4U207-22 x
4U2GE-QK8-35M x	35M																4U207-35M x
4U2GE-QK8-23 x		1-7/16	23														4U207-23 x
				3.150	6.78	4.56	5.66	1.19	1.87	1.39	1/2"	1.37	0.75	2.76	2.37	2GF-QK	
4U2GF-QK8-24 x		1-1/2	24	80	172.2	115.8	143.8	30.2	47.5	35.3		34.8	19.1	70.1	60.2		4U208-24 x
4U2GF-QK8-40M x	40M																4U208-40M x

QuiKlean® housing with integral standoff is 5/8" above the base of standard units

X indicates a 2-letter designation for lube & seals
G = food grade grease
F = food grade EPL
Other alpha - refer to page 3
X = standard configuration
O = open (no seal or flinger)
Others - refer to page 3
Example: GX = food grade grease with standard seals & flingers

Stainless Ball Solution®
Small Two-Bolt Flange
(QuiKlean®) with 5/8" Stand-off

Eccentric lock stainless ball bearing Series "4U"
Small two-bolt pattern Series "6"
Stainless housing Series "A"
5/8" stand-off above base "QK"



More Sizes / Styles
Inserts pgs F-5 to F-9
Eccentric inserts in SS or KG: pgs F-10 to F-34
QuiKlean® eccentric: pgs F-34 to F-47
Set screw inserts in SS or KG: pgs F-48 to F-72
QuiKlean® set screw: pgs F-72 to F-85

CHOICE

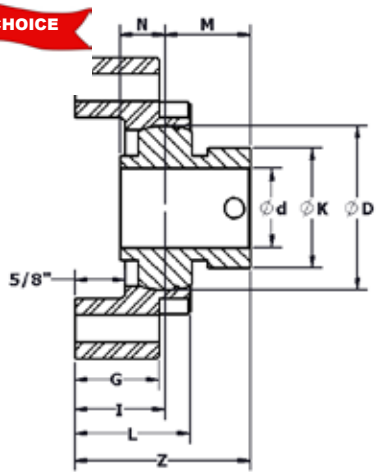

Stainless Housing

"x" indicates a 2-letter designation referring to lube & seals

MOUNTED BEARING PART NUMBER	d			Sphere OD size						Sph depth	Bolt size	Brg c/l to front	Brg c/l to back	Overall LTB of brg + hsg (I+M)	Brg collar size	Housing PN	Ball bearing PN
	mm	in	16th	D	A	B	F	G	L	I	S	M	N	Z	K		WIDE ECC
				2.835	4.94	3.5	3.94	1.13	1.58	1.19	3/8	1.27	0.69	2.46	2.19	6AE-QK	
4U6AE-QK8-20 x		1-1/4	20	72	125.5	88.9	100.1	28.7	40.1	30.2		32.3	17.5	62.5	55.6		4U207-20 x
4U6AE-QK8-22 x		1-3/8	22														4U207-22 x
4U6AE-QK8-35M x	35M																4U207-35M x
4U6AE-QK8-23 x		1-7/16	23														4U207-23 x

Stainless Ball Solution®
Small Two-Bolt Flange
(QuiKlean®) with 5/8" Stand-off

Eccentric lock stainless ball bearing Series "4U"
Small two-bolt pattern Series "6"
Polymer housing Series "G"
5/8" stand-off above base "QK"



More Sizes / Styles
Inserts pgs F-5 to F-9
Eccentric inserts in SS or KG: pgs F-10 to F-34
QuiKlean® eccentric: pgs F-34 to F-47
Set screw inserts in SS or KG: pgs F-48 to F-72
QuiKlean® set screw: pgs F-72 to F-85

CHOICE

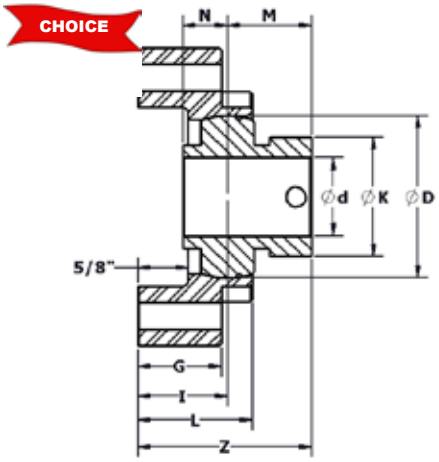

Polymer Housing

"x" indicates a 2-letter designation referring to lube & seals

MOUNTED BEARING PART NUMBER	d			Sphere OD size						Sph depth	Bolt size	Brg c/l to front	Brg c/l to back	Overall LTB of brg (I+M)	Brg collar size	Housing PN	Ball bearing PN
	mm	in	16th	D	A	B	F	G	L	I	S	M	N	Z	K		WIDE ECC
				2.835	4.94	3.5	3.94	1.13	1.58	1.19	3/8	1.27	0.69	2.46	2.19	6GE-QK	
4U6GE-QK8-20 x		1-1/4	20	72	125.5	88.9	100.1	28.7	40.1	30.2		32.3	17.5	62.5	55.6		4U207-20 x
4U6GE-QK8-22 x		1-3/8	22														4U207-22 x
4U6GE-QK8-35M x	35M																4U207-35M x
4U6GE-QK8-23 x		1-7/16	23														4U207-23 x

QuiKlean® housing with integral standoff is 5/8" above the base of standard units

X indicates a 2-letter designation for lube & seals
G = food grade grease
F = food grade EPL
Other alpha - refer to page 3
X = standard configuration
O = open (no seal or flinger)
Others - refer to page 3
Example: GX = food grade grease with standard seals & flingers

ECCENTRIC BALL BEARINGS CONTINUE ON PAGE 44

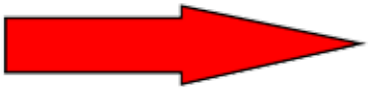

Stainless Ball Solution® Three-Bolt Flange (QuiKlean®) with 5/8" Stand-off

CHOICE

Eccentric lock stainless ball bearing Series "4U"
Standard three-bolt pattern Series "3"
Stainless housing Series "A"
5/8" stand-off above base "QK"



More Sizes / Styles
Inserts pgs F-5 to F-9
Eccentric inserts in SS or KG: pgs F-10 to F-34
QuiKlean® eccentric: pgs F-34 to F-47
Set screw inserts in SS or KG: pgs F-48 to F-72
QuiKlean® set screw: pgs F-72 to F-85

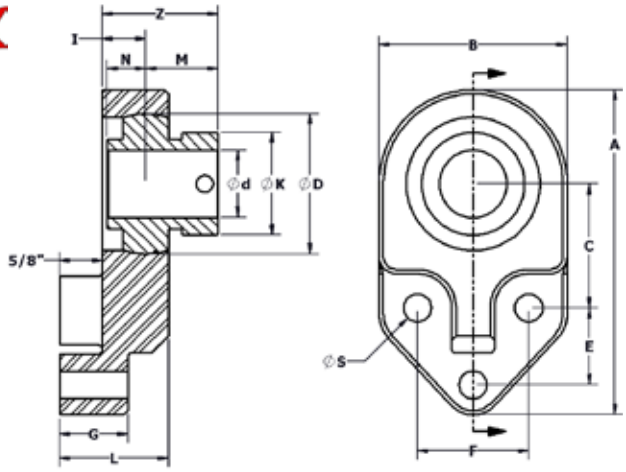

Stainless Housing

"x" indicates a 2-letter designation referring to lube & seals

MOUNTED BEARING PART NUMBER	d			Sphere OD size									Bolt size	Brg c/l to front	Brg c/l to back	Overall LTB of brg (I+M)	Brg collar size	Housing PN	Ball bearing PN
	mm	in	16th	D	A	B	C	E	F	G	L	I	S	M	N	Z	K		WIDE ECC
				2.835	6	3.63	2.38	1.25	2	1.125	1.85	0.79	1/2"	1.27	0.69	2.06	2.19	3AE-QK	
4U3AE-QK8-20 x		1-1/4	20	72	152.4	92.2	60.5	31.8	50.8	28.6	46.9	20.1		32.3	17.5	52.3	55.6		4U207-20 x
4U3AE-QK8-22 x		1-3/8	22																4U207-22 x
4U3AE-QK8-35M x	35M																		4U207-35M x
4U3AE-QK8-23 x		1-7/16	23																4U207-23 x

QuiKlean® housing with integral standoff is 5/8" above the base of standard units

X indicates a 2-letter designation for lube & seals
G = food grade grease
F = food grade EPL
Other alpha - refer to page 3
X = standard configuration
O = open (no seal or flinger)
Others - refer to page 3
Example: GX = food grade grease with standard seals & flingers

Stainless Ball Solution® Three-Bolt Flange (QuiKlean®) with 5/8" Stand-off

CHOICE

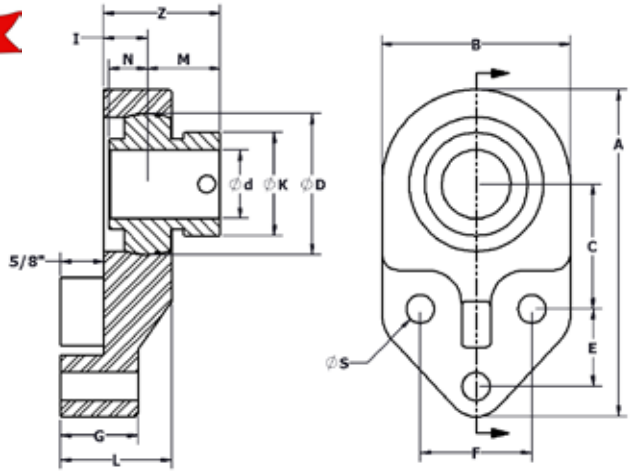

Polymer Housing

Eccentric lock stainless ball bearing Series "4U"
Standard three-bolt pattern Series "3"
Polymer housing Series "G"
5/8" stand-off above base "QK"



More Sizes / Styles
Inserts pgs F-5 to F-9
Eccentric inserts in SS or KG: pgs F-10 to F-34
QuiKlean® eccentric: pgs F-34 to F-47
Set screw inserts in SS or KG: pgs F-48 to F-72
QuiKlean® set screw: pgs F-72 to F-85

"x" indicates a 2-letter designation referring to lube & seals

MOUNTED BEARING PART NUMBER	d			Sphere OD size									Bolt size	Brg c/l to front	Brg c/l to back	Overall LTB of brg (I+M)	Brg collar size	Housing PN	Ball bearing PN
	mm	in	16th	D	A	B	C	E	F	G	L	I	S	M	N	Z	K		WIDE ECC
				1.575	3.66	2.19	1.38	0.81	1.25	1.06	1.47	0.53	5/16"	0.91	0.39	1.44	1.13	3GA-QK	
4U3GA-QK8-08 x		1/2	8	40	93.0	55.6	35.1	20.6	31.8	26.9	37.3	13.5		23.1	9.9	36.6	28.7		4U203-08 x
4U3GA-QK8-10 x		5/8	10																4U203-10 x
				1.850	4.34	2.56	1.69	0.88	1.5	1.06	1.58	0.59	3/8"	1.05	0.5	1.64	1.31	3GB-QK	
4U3GB-QK8-08 x		1/2	8	47	110.2	65.0	42.9	22.4	38.1	26.9	40.1	15.0		26.7	12.7	41.7	33.3		4U204-08 x
4U3GB-QK8-10 x		5/8	10																4U204-10 x
4U3GB-QK8-12 x		3/4	12																4U204-12 x
4U3GB-QK8-20M x	20M																		4U204-20M x
				2.047	4.75	2.75	1.81	1.13	1.63	1.13	1.615	0.64	3/8"	1.06	0.56	1.70	1.5	3GC-QK	
				52	120.7	69.9	46.0	28.6	41.4	28.6	41.0	16.1		26.9	14.2	43.1	38.1		
4U3GC-QK8-25M x	25M																		4U205-25M x
4U3GC-QK8-16 x		1	16																4U205-16 x
				2.441	5.44	3.25	2.06	1.25	1.88	1.125	1.69	0.66	3/8"	1.19	0.63	1.85	1.75	3GD-QK	
				62	138.2	82.6	52.3	31.8	47.8	28.6	42.9	16.8		30.2	16.0	47.0	44.5		
4U3GD-QK8-30M x	30M																		4U206-30M x
4U3GD-QK8-19 x		1-3/16	19																4U206-19 x
4U3GD-QK8-20 x		1-1/4	20																4U206-20 x
				2.835	6.19	3.81	2.38	1.25	2	1.19	1.85	0.79	1/2"	1.27	0.69	2.06	2.19	3GE-QK	
4U3GE-QK8-20 x		1-1/4	20	72	157.2	96.8	60.5	31.8	50.8	30.2	47.0	20.1		32.3	17.5	52.3	55.6		4U207-20 x
4U3GE-QK8-22 x		1-3/8	22																4U207-22 x
4U3GE-QK8-35M x	35M																		4U207-35M x
4U3GE-QK8-23 x		1-7/16	23																4U207-23 x
				3.150	6.72	4.25	2.56	1.38	2.25	1.19	1.86	0.77	1/2"	1.37	0.75	2.14	2.37	3GF-QK	
4U3GF-QK8-24 x		1-1/2	24	80	170.7	108.0	65.0	35.1	57.2	30.2	47.2	19.6		34.8	19.1	54.4	60.2		4U208-24 x
4U3GF-QK8-40M x	40M																		4U208-40Mx

QuiKlean® housing with integral standoff is 5/8" above the base of standard units

X indicates a 2-letter designation for lube & seals
G = food grade grease
F = food grade EPL
Other alpha - refer to page 3
X = standard configuration
O = open (no seal or flinger)
Others - refer to page 3
Example: GX = food grade grease with standard seals & flingers

Stainless Ball Solution® Four-Bolt Flange (QuiKlean®) with 5/8" Stand-off

Eccentric lock stainless ball bearing Series "4U"
Standard four-bolt pattern Series "4"
Stainless housing Series "A"
5/8" stand-off above base "QK"

CHOICE



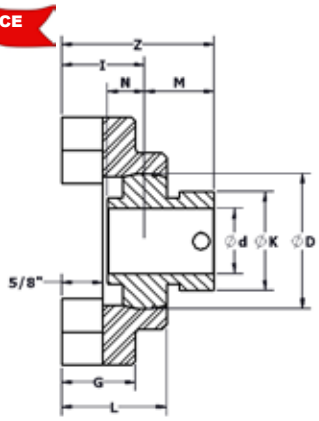

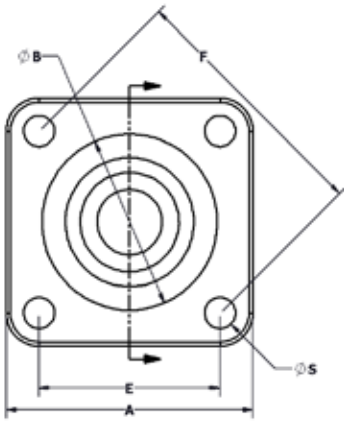

Stainless Housing

More Sizes / Styles
Inserts pgs F-5 to F-9
Eccentric inserts in SS or KG: pgs F-10 to F-34
QuiKlean® eccentric: pgs F-34 to F-47
Set screw inserts in SS or KG: pgs F-48 to F-72
QuiKlean® set screw: pgs F-72 to F-85

"x" indicates a 2-letter designation referring to lube & seals

MOUNTED BEARING PART NUMBER	d			Sphere OD size								Bolt size	Brg c/l to front	Brg c/l to back	Overall LTB of brg (I+M)	Brg collar size	Housing PN	Ball bearing PN
	mm	in	16th	D	A	B	E	F	G	L	I	S	M	N	Z	K		WIDE ECC
				1.850	3.37	2.42	2.5	3.54	1.06	1.58	1.22	3/8"	1.05	0.5	2.27	1.31	4AB-QK	
4U4AB-QK8-08 x		1/2	8	47	85.6	61.5	63.5	89.9	26.9	40.1	31.0		26.7	12.7	57.7	33.3		4U204-08 x
4U4AB-QK8-10 x		5/8	10															4U204-10 x
4U4AB-QK8-12 x		3/4	12															4U204-12 x
4U4AB-QK8-20M x	20M																	4U204-20M x
				2.047	3.75	2.66	2.75	3.89	1.13	1.6	1.26	7/16"	1.06	0.56	2.32	1.5	4AC-QK	
				52	95.3	67.6	69.9	98.8	28.7	40.6	32.0		26.9	14.2	58.9	38.1		
4U4AC-QK8-25M x	25M																	4U205-25M x
4U4AC-QK8-16 x		1	16															4U205-16 x
				2.441	4.25	3.12	3.25	4.59	1.13	1.69	1.28	7/16"	1.19	0.63	2.47	1.75	4AD-QK	
				62	108.0	79.2	82.6	116.6	28.7	42.9	32.5		30.2	16.0	62.7	44.5		
4U4AD-QK8-30M x	30M																	4U206-30M x
4U4AD-QK8-19 x		1-3/16	19															4U206-19 x
4U4AD-QK8-20 x		1-1/4	20															4U206-20 x
				2.835	4.75	3.62	3.62	5.13	1.19	1.85	1.42	1/2"	1.27	0.69	2.69	2.19	4AE-QK	
4U4AE-QK8-20 x		1-1/4	20	72	120.7	91.9	91.9	130.3	30.2	47.0	36.1		32.3	17.5	68.3	55.6		4U207-20 x
4U4AE-QK8-22 x		1-3/8	22															4U207-22 x
4U4AE-QK8-35M x	35M																	4U207-35M x
4U4AE-QK8-23 x		1-7/16	23															4U207-23 x
				3.150	5.12	4	4	5.66	1.19	1.87	1.39	1/2"	1.37	0.75	2.76	2.37	4AF-QK	
4U4AF-QK8-24 x		1-1/2	24	80	130.0	101.6	101.6	143.8	30.2	47.5	35.3		34.8	19.1	70.1	60.2		4U208-24 x
4U4AF-QK8-40M x	40M																	4U208-40M x

QuiKlean® housing with integral standoff is 5/8" above the base of standard units

X indicates a 2-letter designation for lube & seals
G = food grade grease
F = food grade EPL
Other alpha - refer to page 3
X = standard configuration
O = open (no seal or flinger)
Others - refer to page 3
Example: GX = food grade grease with standard seals & flingers

Stainless Ball Solution®
Four-Bolt Flange
(QuiKlean®) with 5/8” Stand-off

CHOICE

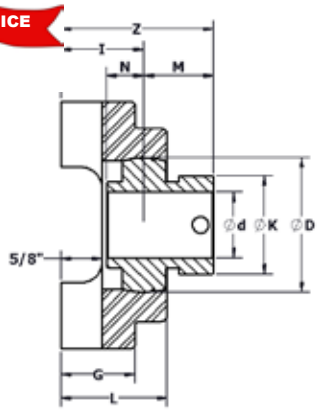

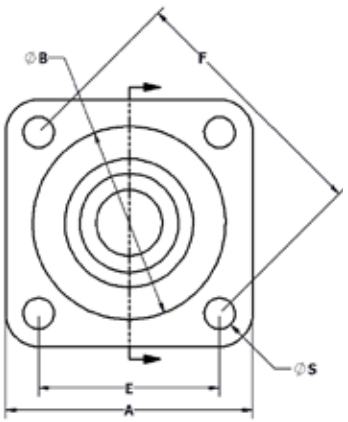

Polymer Housing

Eccentric lock stainless ball bearing Series “4U”
Standard four-bolt pattern Series “4”
Polymer housing Series “G”
5/8" stand-off above base “QK”



More Sizes / Styles
Inserts pgs F-5 to F-9
Eccentric inserts in SS or KG: pgs F-10 to F-34
QuiKlean® eccentric: pgs F-34 to F-47
Set screw inserts in SS or KG: pgs F-48 to F-72
QuiKlean® set screw: pgs F-72 to F-85

“x” indicates a 2-letter designation referring to lube & seals

MOUNTED BEARING PART NUMBER	d			Sphere OD size								Bolt size	Brg c/l to front	Brg c/l to back	Overall LTB of brg (I+M)	Brg collar size	Housing PN	Ball bearing PN
	mm	in	16th	D	A	B	E	F	G	L	I	S	M	N	Z	K		WIDE ECC
				1.575	3	2.15	2.13	3.01	1.06	1.47	1.15	3/8"	0.91	0.39	2.06	1.13	4GA-QK	
4U4GA-QK8-08 x		1/2	8	40	76.2	54.6	54.1	76.5	26.9	37.3	29.2		23.1	9.9	52.3	28.7		4U203-08 x
4U4GA-QK8-10 x		5/8	10															4U203-10 x
				1.850	3.38	2.69	2.5	3.54	1.06	1.57	1.22	3/8"	1.05	0.5	2.27	1.31	4GB-QK	
4U4GB-QK8-08 x		1/2	8	47	85.9	68.3	63.5	89.9	26.9	39.9	31.0		26.7	12.7	57.7	33.3		4U204-08 x
4U4GB-QK8-10 x		5/8	10															4U204-10 x
4U4GB-QK8-12 x		3/4	12															4U204-12 x
4U4GB-QK8-20M x	20M																	4U204-20M x
				2.047	3.75	2.93	2.75	3.89	1.13	1.62	1.26	7/16"	1.06	0.56	2.32	1.5	4GC-QK	
				52	95.3	74.4	69.9	98.8	28.6	41.1	32.0		26.9	14.2	58.9	38.1		
4U4GC-QK8-25M x	25M																	4U205-25M x
4U4GC-QK8-16 x		1	16															4U205-16 x
				2.441	4.25	3.63	3.25	4.6	1.13	1.69	1.28	7/16"	1.19	0.63	2.47	1.75	4GD-QK	
				62	108.0	92.2	82.6	116.8	28.6	42.9	32.5		30.2	16.0	62.7	44.5		
4U4GD-QK8-30M x	30M																	4U206-30M x
4U4GD-QK8-19 x		1-3/16	19															4U206-19 x
4U4GD-QK8-20 x		1-1/4	20															4U206-20 x
				2.835	4.75	4	3.63	5.13	1.19	1.85	1.42	1/2"	1.27	0.69	2.69	2.19	4GE-QK	
4U4GE-QK8-20 x		1-1/4	20	72	120.7	101.6	92.2	130.3	30.2	47.0	36.1		32.3	17.5	68.3	55.6		4U207-20 x
4U4GE-QK8-22 x		1-3/8	22															4U207-22 x
4U4GE-QK8-35M x	35M																	4U207-35M x
4U4GE-QK8-23 x		1-7/16	23															4U207-23 x
				3.150	5.13	4.56	4	5.66	1.19	1.87	1.39	1/2"	1.37	0.75	2.76	2.37	4GF-QK	
4U4GF-QK8-24 x		1-1/2	24	80	130.3	115.8	101.6	143.8	30.2	47.5	35.3		34.8	19.1	70.1	60.2		4U208-24 x
4U4GF-QK8-40M x	40M																	4U208-40M x
		1-5/8	26															

QuiKlean® housing with integral standoff is 5/8" above the base of standard units

X indicates a 2-letter designation for lube & seals
G = food grade grease
F = food grade EPL
Other alpha - refer to page 3
X = standard configuration
O = open (no seal or flinger)
Others - refer to page 3
Example: GX = food grade grease with standard seals & flingers

Stainless Ball Solution® Pillow Block

CLASSIC or VALUE

Set screw locking stainless ball bearing Series "4Y"
Standard backing height Series "1"
Stainless housing Series "A"

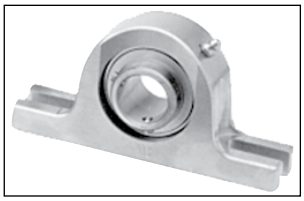

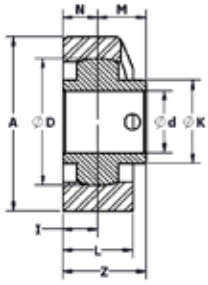

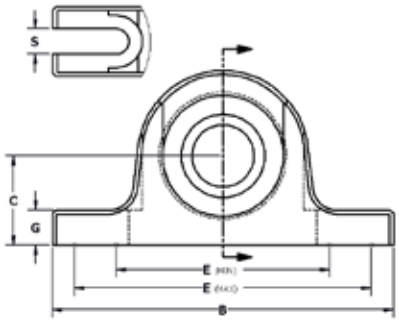

Stainless Housing

More Sizes / Styles
Inserts pgs F-5 to F-9
Eccentric inserts in SS or KG: pgs F-10 to F-34
QuiKlean® eccentric: pgs F-34 to F-47
Set screw inserts in SS or KG: pgs F-48 to F-72
QuiKlean® set screw: pgs F-72 to F-85

"x" indicates a 2-letter designation referring to lube & seals

MOUNTED BEARING PART NUMBER	d			Sphere OD size								Sph. depth	Bolt size	Brg c/l to front	Brg c/l to back	Overall LTB of brg (I+M)	Brg collar size	Housing PN	Ball bearing PN
	mm	in	16th	D	A	B	C	E min	E max	G	L	I	S	M	N	Z	K	PN	SETSCREW
4Y1AA8-12M x	12			1.575	2.13	5	1.06	2.94	4.06	0.44	1.13	0.56	3/8	0.61	0.41	1.17	0.97	1AA	4Y203-12M x
4Y1AA8-08 x		1/2	8	40	54.1	127.0	26.9	74.7	103.1	11.2	28.7	14.2		15.5	10.4	29.7	24.6		4Y203-08 x
4Y1AA8-09 x		9/16	9																4Y203-09 x
4Y1AA8-15M x	15																		4Y203-15M x
4Y1AA8-10 x		5/8	10																4Y203-10 x
4Y1AA8-17M x	17																		4Y203-17M x
4Y1AB8-12M x	12			1.850	2.56	5.25	1.31	3.25	4.38	0.5	1.13	0.56	3/8	0.72	0.5	1.28	1.14	1AB	4Y204-12M x
4Y1AB8-08 x		1/2	8	47	65.0	133.4	33.3	82.6	111.3	12.7	28.7	14.2		18.3	12.7	32.5	29.0		4Y204-08 x
4Y1AB8-15M x	15																		4Y204-15M x
4Y1AB8-10 x		5/8	10																4Y204-10 x
4Y1AB8-17M x	17																		4Y204-17M x
4Y1AB8-11 x		11/16	11																4Y204-11 x
4Y1AB8-12 x		3/4	12																4Y204-12 x
4Y1AB8-20M x	20																		4Y204-20M x
4Y1AC8-12 x		3/4	12	2.047	2.81	5.5	1.44	3.44	4.63	0.56	1.13	0.56	3/8	0.78	0.56	1.34	1.34	1AC	4Y205-12 x
4Y1AC8-14 x		7/8	14	52	71.4	139.7	36.6	87.4	117.6	14.2	28.7	14.2		19.8	14.2	34.0	34.0		4Y205-14 x
4Y1AC8-15 x		15/16	15																4Y205-15 x
4Y1AC8-25M x	25																		4Y205-25M x
4Y1AC8-16 x		1	16																4Y205-16 x
4Y1AD8-16 x		1	16	2.441	3.25	6.25	1.69	4.13	5.13	0.69	1.47	0.73	1/2	0.87	0.63	1.60	1.59	1AD	4Y206-16 x
4Y1AD8-17 x		1-1/16	17	62	82.6	158.8	42.9	104.9	130.3	17.5	37.3	18.5		22.1	16.0	40.6	40.4		4Y206-17 x
4Y1AD8-18 x		1-1/8	18																4Y206-18 x
4Y1AD8-30M x	30																		4Y206-30M x
4Y1AD8-19 x		1-3/16	19																4Y206-19 x
4Y1AD8-20 x		1-1/4	20																4Y206-20 x
4Y1AE8-19 x		1-3/16	19	2.835	3.75	6.56	1.88	4.69	5.44	0.69	1.47	0.73	1/2	1	0.69	1.73	1.84	1AE	4Y207-19 x
4Y1AE8-20 x		1-1/4	20	72	95.3	166.6	47.8	119.1	138.2	17.5	37.3	18.5		25.4	17.5	43.9	46.7		4Y207-20 x
4Y1AE8-21 x		1-5/16	21																4Y207-21 x
4Y1AE8-22 x		1-3/8	22																4Y207-22 x
4Y1AE8-35M x	35																		4Y207-35M x
4Y1AE8-23 x		1-7/16	23																4Y207-23 x
4Y1AF8-23 x		1-7/16	23	3.150	4.19	7.25	2.13	5	6.13	0.75	1.63	0.81	1/2	1.19	0.75	2.00	2.08	1AF	4Y208-23 x
4Y1AF8-24 x		1-1/2	24	80	106.4	184.2	54.1	127.0	155.7	19.1	41.4	20.6		30.2	19.1	50.8	52.8		4Y208-24 x
4Y1AF8-40M x	40																		4Y208-40M x
4Y1AG8-24 x		1-1/2	24	3.346	4.25	7.44	2.13	5.31	6.31	0.75	1.72	0.86	1/2	1.19	0.75	2.05	2.31	1AG	4Y209-24 x
4Y1AG8-26 x		1-5/8	26	85	108.0	189.0	54.1	134.9	160.3	19.1	43.7	21.8		30.2	19.1	52.1	58.7		4Y209-26 x
4Y1AG8-27 x		1-11/16	27																4Y209-27 x
4Y1AG8-28 x		1-3/4	28																4Y209-28 x
4Y1AG8-45M x	45																		4Y209-45M x
4Y1AH8-28 x		1-3/4	28	3.543	4.5	8.13	2.25	5.88	6.75	0.75	1.97	0.99	5/8	1.28	0.75	2.27	2.45	1AH	4Y210-28 x
4Y1AH8-30 x		1-7/8	30	90	114.3	206.5	57.2	149.4	171.5	19.1	50.0	25.1		32.5	19.1	57.7	62.2		4Y210-30 x
4Y1AH8-31 x		1-15/16	31																4Y210-31 x
4Y1AH8-50M x	50																		4Y210-50M x
4Y1AH8-32 x		2	32																4Y210-32 x
4Y1AI8-32 x		2	32	3.937	4.94	8.88	2.5	6.38	7.5	0.88	1.97	0.99	5/8	1.32	0.87	2.31	2.76	1AI	4Y211-32 x
4Y1AI8-55M x	55			100	125.5	225.6	63.5	162.1	190.5	22.4	50.0	25.1		33.5	22.1	58.7	70.1		4Y211-55M x
4Y1AI8-35 x		2-3/16	35																4Y211-35 x
4Y1AI8-36 x		2-1/4	36																4Y211-36 x
4Y1AJ8-36 x		2-1/4	36	4.331	5.38	9.5	2.75	6.44	8.13	0.88	1.97	0.99	5/8	1.56	1	2.55	3.03	1AJ	4Y212-36 x
4Y1AJ8-60M x	60			110	136.7	241.3	69.9	163.6	206.5	22.4	50.0	25.1		39.6	25.4	64.8	77.0		4Y212-60M x
4Y1AJ8-39 x		2-7/16	39																4Y212-39 x
4Y1AK8-39 x		2-7/16	39	4.921	6.06	10.75	3	7.44	9.13	0.94	1.97	0.99	3/4	1.75	1.19	2.74	3.43	1AK	4Y214-39 x
4Y1AK8-40 x		2-1/2	40	125	153.9	273.1	76.2	189.0	231.9	23.9	50.0	25.1		44.5	30.2	69.6	87.1		4Y214-40 x
4Y1AK8-70M x	70																		4Y214-70M x
4Y1AK8-44 x		2-3/4	44																4Y214-44 x
4Y1AL8-40 x				5.128	6.75	11.75	3.5	8.25	9.75	1	2.47	1.24	7/8	1.75	1.31	2.99	3.6	1AL	4Y215-40
4Y1AL8-43 x		2-11/16	43	130	171.5	298.5	88.9	209.6	247.7	25.4	62.7	31.5		44.5	33.3	75.9	91.4		4Y215-43 x
4Y1AL8-44 x		2-3/4	44																4Y215-44 x
4Y1AL8-45 x		2-13/16	45																4Y215-45 x
4Y1AL8-47 x		2-15/16	47																4Y215-47 x
4Y1AL8-75M x	75																		4Y215-75M x
4Y1AL8-48 x		3	48																4Y215-48 x

X indicates a 2-letter designation for lube & seals
G = food grade grease
F = food grade EPL
Other alpha - refer to page 3
X = standard configuration
O = open (no seal or flinger)
Others - refer to page 3
Example: GX = food grade grease with standard seals & flingers

Stainless Ball Solution® Pillow Block

CLASSIC or VALUE

Set screw locking stainless ball bearing Series “4Y”
Standard backing height Series “1”
Polymer housing Series “G”



More Sizes / Styles
Inserts pgs F-5 to F-9
Eccentric inserts in SS or KG: pgs F-10 to F-34
QuiKlean® eccentric: pgs F-34 to F-47
Set screw inserts in SS or KG: pgs F-48 to F-72
QuiKlean® set screw: pgs F-72 to F-85

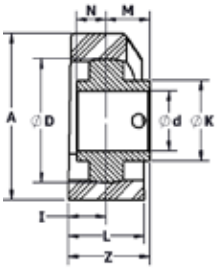

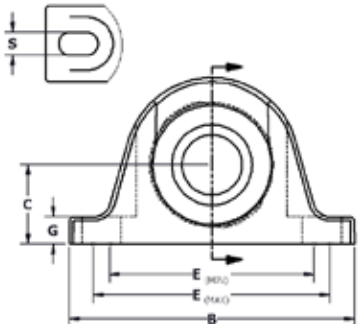

Polymer Housing

“x” indicates a 2-letter designation referring to lube & seals

MOUNTED BEARING PART NUMBER	d			Sphere OD size								Sph. depth	Bolt size	Brg c/l to front	Brg c/l to back from brg	Overall LTB of brg (I+M)	Brg collar size	Housing PN	Ball bearing PN
	mm	in	16th	D	A	B	C	E min	E max	G	L	I	S	M	N	Z	K	PN	SETSCREW
4Y1GA8-12M x	12			1.575	2.25	5	1.06	2.94	4.06	0.44	1.25	0.63	3/8	0.61	0.41	1.24	0.97	1GA	4Y203-12M x
4Y1GA8-08 x		1/2	8	40	57.2	127.0	26.9	74.7	103.1	11.2	31.8	16.0		15.5	10.4	31.5	24.6		4Y203-08 x
4Y1GA8-09 x		9/16	9																4Y203-09 x
4Y1GA8-15M x	15																		4Y203-15M x
4Y1GA8-10 x		5/8	10																4Y203-10 x
4Y1GA8-17M x	17																		4Y203-17M x
4Y1GB8-12M x	12			1.850	2.69	5.25	1.31	3.25	4.38	0.5	1.38	0.69	3/8	0.72	0.5	1.41	1.14	1GB	4Y204-12M x
4Y1GB8-08 x		1/2	8	47	68.3	133.4	33.3	82.6	111.3	12.7	35.1	17.5		18.3	12.7	35.8	29.0		4Y204-08 x
4Y1GB8-15M x	15																		4Y204-15M x
4Y1GB8-10 x		5/8	10																4Y204-10 x
4Y1GB8-17M x	17																		4Y204-17M x
4Y1GB8-11 x		11/16	11																4Y204-11 x
4Y1GB8-12 x		3/4	12																4Y204-12 x
4Y1GB8-20M x	20																		4Y204-20M x
4Y1GC8-12 x		3/4	12	2.047	2.94	5.5	1.44	3.44	4.63	0.56	1.5	0.75	3/8	0.78	0.56	1.53	1.34	1GC	4Y205-12 x
4Y1GC8-14 x		7/8	14	52	74.7	139.7	36.6	87.4	117.6	14.2	38.1	19.1		19.8	14.2	38.9	34.0		4Y205-14 x
4Y1GC8-15 x		15/16	15																4Y205-15 x
4Y1GC8-25M x	25																		4Y205-25M x
4Y1GC8-16 x		1	16																4Y205-16 x
4Y1GD8-16 x		1	16	2.441	3.38	6.25	1.69	4.13	5.13	0.69	1.75	0.88	1/2	0.87	0.63	1.75	1.59	1GD	4Y206-16 x
4Y1GD8-17 x		1-1/16	17	62	85.9	158.8	42.9	104.9	130.3	17.5	44.5	22.4		22.1	16.0	44.5	40.4		4Y206-17 x
4Y1GD8-18 x		1-1/8	18																4Y206-18 x
4Y1GD8-30M x	30																		4Y206-30M x
4Y1GD8-19 x		1-3/16	19																4Y206-19 x
4Y1GD8-20 x		1-1/4	20																4Y206-20 x
4Y1GE8-19 x		1-3/16	19	2.835	3.88	6.56	1.88	4.69	5.44	0.69	1.75	0.88	1/2	1	0.69	1.88	1.84	1GE	4Y207-19 x
4Y1GE8-20 x		1-1/4	20	72	98.6	166.6	47.8	119.1	138.2	17.5	44.5	22.4		25.4	17.5	47.8	46.7		4Y207-20 x
4Y1GE8-21 x		1-5/16	21																4Y207-21 x
4Y1GE8-22 x		1-3/8	22																4Y207-22 x
4Y1GE8-35M x	35																		4Y207-35M x
4Y1GE8-23 x		1-7/16	23																4Y207-23 x
4Y1GF8-23 x		1-7/16	23	3.150	4.31	7.25	2.13	5	6.13	0.75	1.94	0.97	1/2	1.19	0.75	2.16	2.08	1GF	4Y208-23 x
4Y1GF8-24 x		1-1/2	24	80	109.5	184.2	54.1	127.0	155.7	19.1	49.3	24.6		30.2	19.1	54.9	52.8		4Y208-24 x
4Y1GF8-40M x	40																		4Y208-40M x
4Y1GG8-24 x		1-1/2	24	3.346	4.38	7.44	2.13	5.31	6.31	0.75	2	1	1/2	1.19	0.75	2.19	2.31	1GG	4Y209-24 x
4Y1GG8-26 x		1-5/8	26	85	111.3	189.0	54.1	134.9	160.3	19.1	50.8	25.4		30.2	19.1	55.6	58.7		4Y209-26 x
4Y1GG8-27 x		1-11/16	27																4Y209-27 x
4Y1GG8-28 x		1-3/4	28																4Y209-28 x
4Y1GG8-45M x	45																		4Y209-45M x
4Y1GH8-28 x		1-3/4	28	3.543	4.63	8.13	2.25	5.88	6.75	0.75	2.25	1.13	5/8	1.28	0.75	2.41	2.45	1GH	4Y210-28 x
4Y1GH8-30 x		1-7/8	30	90	117.6	206.5	57.2	149.4	171.5	19.1	57.2	28.7		32.5	19.1	61.2	62.2		4Y210-30 x
4Y1GH8-31 x		1-15/16	31																4Y210-31 x
4Y1GH8-50M x	50																		4Y210-50M x
4Y1GH8-32 x		2	32																4Y210-32 x
4Y1GI8-32 x		2	32	3.937	5.13	8.88	2.5	6.38	7.5	0.88	2.38	1.19	5/8	1.32	0.87	2.51	2.76	1GI	4Y211-32 x
4Y1GI8-55M x	55			100	130.3	225.6	63.5	162.1	190.5	22.4	60.5	30.2		33.5	22.1	63.8	70.1		4Y211-55M x
4Y1GI8-35 x		2-3/16	35																4Y211-35 x
4Y1GI8-36 x		2-1/4	36																4Y211-36 x
4Y1GJ8-36 x		2-1/4	36	4.331	5.5	9.5	2.75	6.44	8.13	0.88	2.5	1.25	5/8	1.56	1	2.81	3.03	1GJ	4Y212-36 x
4Y1GJ8-60M x	60			110	139.7	241.3	69.9	163.6	206.5	22.4	63.5	31.8		39.6	25.4	71.4	77.0		4Y212-60M x
4Y1GJ8-39 x		2-7/16	39																4Y212-39 x
4Y1GK8-39 x		2-7/16	39	4.921	6.25	10.75	3	7.44	9.13	0.94	2.75	1.38	3/4	1.75	1.19	3.13	3.43	1GK	4Y214-39 x
4Y1GK8-40 x		2-1/2	40	125	158.8	273.1	76.2	189.0	231.9	23.9	69.9	35.1		44.5	30.2	79.5	87.1		4Y214-40 x
4Y1GK8-70M x	70																		4Y214-70M x
4Y1GK8-44 x		2-3/4	44																4Y214-44 x
4Y1GL8-40 x				5.128	6.88	11.75	3.5	8.25	9.75	1	2.88	1.44	7/8	1.75	1.31	3.19	3.6	1GL	4Y215-40
4Y1GL8-43 x		2-11/16	43	130	174.8	298.5	88.9	209.6	247.7	25.4	73.2	36.6		44.5	33.3	81.0	91.4		4Y215-43 x
4Y1GL8-44 x		2-3/4	44																4Y215-44 x
4Y1GL8-45 x		2-13/16	45																4Y215-45 x
4Y1GL8-47 x		2-15/16	47																4Y215-47 x
4Y1GL8-75M x	75																		4Y215-75M x
4Y1GL8-48 x		3	48																4Y215-48 x

X indicates a 2-letter designation for lube & seals

G = food grade grease
F = food grade EPL
Other alpha - refer to page 3
X = standard configuration
O = open (no seal or flinger)
Others - refer to page 3

Example: GX = food grade grease with standard seals & flingers

Stainless Ball Solution® Pillow Block

CLASSIC or VALUE

Set screw locking stainless ball bearing Series "4Y"
Low backing height Series "10"
Stainless housing Series "A"

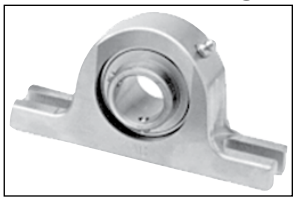

More Sizes / Styles
Inserts pgs F-5 to F-9
Eccentric inserts in SS or KG: pgs F-10 to F-34
QuiKlean® eccentric: pgs F-34 to F-47
Set screw inserts in SS or KG: pgs F-48 to F-72
QuiKlean® set screw: pgs F-72 to F-85

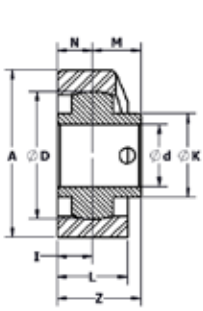

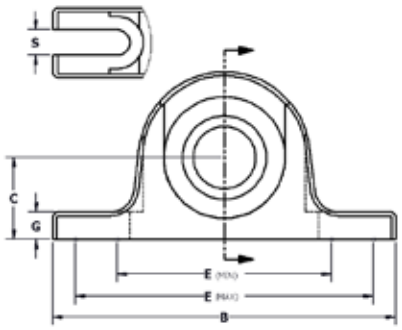

Stainless Housing

"x" indicates a 2-letter designation referring to lube & seals

MOUNTED BEARING PART NUMBER	d			Sphere OD size								Sph depth	Bolt size	Brg c/l to front	Brg c/l to back	Overall LTB of brg (I+M)	Brg collar size	Housing PN	Ball bearing PN
	mm	in	16th	D	A	B	C	E min	E max	G	L	I	S	M	N	Z	K		SETSCREW
4Y10AA8-12M x	12			1.575										0.61	0.41		0.97	10AA	4Y203-12M x
4Y10AA8-08 x		1/2	8	40	0.0	0.0	0.0	0.0	0.0	0.0	0.0	0.0		15.5	10.4	0.0	24.6		4Y203-08 x
4Y10AA8-09 x		9/16	9																4Y203-09 x
4Y10AA8-15M x	15																		4Y203-15M x
4Y10AA8-10 x		5/8	10																4Y203-10 x
4Y10AA8-17M x	17																		4Y203-17M x
4Y10AB8-12M x	12			1.850	2.5	5.25	1.25	3.25	4.38	0.44	1.13	0.56	3/8"	0.72	0.5	1.28	1.14	10AB	4Y204-12M x
4Y10AB8-08 x		1/2	8	47	63.5	133.4	31.8	82.6	111.3	11.2	28.7	14.2		18.3	12.7	32.5	29.0		4Y204-08 x
4Y10AB8-15M x	15																		4Y204-15M x
4Y10AB8-10 x		5/8	10																4Y204-10 x
4Y10AB8-17M x	17																		4Y204-17M x
4Y10AB8-11 x		11/16	11																4Y204-11 x
4Y10AB8-12 x		3/4	12																4Y204-12 x
4Y10AB8-20M x	20																		4Y204-20M x
4Y10AC8-12 x		3/4	12	2.047	2.69	5.5	1.31	3.44	4.63	0.44	1.13	0.56	3/8"	0.78	0.56	1.34	1.34	10AC	4Y205-12 x
4Y10AC8-14 x		7/8	14	52	68.3	139.7	33.3	87.4	117.6	11.2	28.7	14.2		19.8	14.2	34.0	34.0		4Y205-14 x
4Y10AC8-15 x		15/16	15																4Y205-15 x
4Y10AC8-25M x	25																		4Y205-25M x
4Y10AC8-16 x		1	16																4Y205-16 x
4Y10AD8-16 x		1	16	2.441	3.13	6.25	1.56	4.13	5.13	0.56	1.47	0.74	1/2"	0.87	0.63	1.61	1.59	10AD	4Y206-16 x
4Y10AD8-17 x		1-1/16	17	62	79.4	158.8	39.6	104.9	130.3	14.2	37.3	18.8		22.1	16.0	40.9	40.4		4Y206-17 x
4Y10AD8-18 x		1-1/8	18																4Y206-18 x
4Y10AD8-30M x	30																		4Y206-30M x
4Y10AD8-19 x		1-3/16	19																4Y206-19 x
4Y10AD8-20 x		1-1/4	20																4Y206-20 x
4Y10AE8-19 x		1-3/16	19	2.835	3.69	6.56	1.81	4.69	5.44	0.63	1.47	0.74	1/2"	1	0.69	1.74	1.84	10AE	4Y207-19 x
4Y10AE8-20 x		1-1/4	20	72	93.7	166.6	46.0	119.1	138.2	16.0	37.3	18.8		25.4	17.5	44.2	46.7		4Y207-20 x
4Y10AE8-21 x		1-5/16	21																4Y207-21 x
4Y10AE8-22 x		1-3/8	22																4Y207-22 x
4Y10AE8-35M x	35																		4Y207-35M x
4Y10AE8-23 x		1-7/16	23																4Y207-23 x
4Y10AF8-23 x		1-7/16	23	3.150	4	7.25	1.94	5	6.13	0.56	1.625	0.81	1/2"	1.19	0.75	2.00	2.08	10AF	4Y208-23 x
4Y10AF8-24 x		1-1/2	24	80	101.6	184.2	49.3	127.0	155.7	14.2	41.3	20.6		30.2	19.1	50.8	52.8		4Y208-24 x
4Y10AF8-40M x	40																		4Y208-40M x
4Y10AG8-24 x		1-1/2	24	3.346	4.19	7.44	2.06	5.31	6.31	0.69	1.72	0.86	1/2"	1.19	0.75	2.05	2.31	10AG	4Y209-24 x
4Y10AG8-26 x		1-5/8	26	85	106.4	189.0	52.3	134.9	160.3	17.5	43.7	21.8		30.2	19.1	52.1	58.7		4Y209-26 x
4Y10AG8-27 x		1-11/16	27																4Y209-27 x
4Y10AG8-28 x		1-3/4	28																4Y209-28 x
4Y10AG8-45M x	45																		4Y209-45M x
4Y10AH8-28 x		1-3/4	28	3.543	4.44	8.13	2.19	5.88	6.75	0.69	1.97	0.99	5/8"	1.28	0.75	2.27	2.45	10AH	4Y210-28 x
4Y10AH8-30 x		1-7/8	30	90	112.8	206.5	55.6	149.4	171.5	17.5	50.0	25.1		32.5	19.1	57.7	62.2		4Y210-30 x
4Y10AH8-31 x		1-15/16	31																4Y210-31 x
4Y10AH8-50M x	50																		4Y210-50M x
4Y10AH8-32 x		2	32																4Y210-32 x
4Y10AI8-32 x		2	32	3.937	4.88	8.88	2.44	6.38	7.5	0.81	1.97	0.99	5/8"	1.31	0.87	2.30	2.76	10AI	4Y211-32 x
4Y10AI8-55M x	55			100	124.0	225.6	62.0	162.1	190.5	20.6	50.0	25.1		33.3	22.1	58.4	70.1		4Y211-55M x
4Y10AI8-35 x		2-3/16	35																4Y211-35 x
4Y10AI8-36 x		2-1/4	36																4Y211-36 x
4Y10AJ8-36 x		2-1/4	36	4.331	5.31	9.5	2.69	6.44	8.13	0.81	1.97	0.99	5/8"	1.56	1	2.55	3.03	10AJ	4Y212-36 x
4Y10AJ8-60M x	60			110	134.9	241.3	68.3	163.6	206.5	20.6	50.0	25.1		39.6	25.4	64.8	77.0		4Y212-60M x
4Y10AJ8-39 x		2-7/16	39																4Y212-39 x
4Y10AK8-39 x		2-7/16	39	4.921	6.19	10.75	3.13	7.44	9.13	1.06	1.97	0.99	3/4"	1.75	1.19	2.74	3.43	10AK	4Y214-39 x
4Y10AK8-40 x		2-1/2	40	125	157.2	273.1	79.5	189.0	231.9	26.9	50.0	25.1		44.5	30.2	69.6	87.1		4Y214-40 x
4Y10AK8-70M x	70																		4Y214-70M x
4Y10AK8-44 x		2-3/4	44																4Y214-44 x
4Y10AL8-40 x				5.128	6.5	11.75	3.25	8.25	9.75	0.75	2.47	1.24	7/8"	1.75	1.31	2.99	3.6	10AL	4Y215-40
4Y10AL8-43 x		2-11/16	43	130	165.1	298.5	82.6	209.6	247.7	19.1	62.7	31.5		44.5	33.3	75.9	91.4		4Y215-43 x
4Y10AL8-44 x		2-3/4	44																4Y215-44 x
4Y10AL8-45 x		2-13/16	45																4Y215-45 x
4Y10AL8-47 x		2-15/16	47																4Y215-47 x
4Y10AL8-75M x	75																		4Y215-75M x
4Y10AL8-48 x		3	48																4Y215-48 x

X indicates a 2-letter designation for lube & seals
G = food grade grease
F = food grade EPL
Other alpha - refer to page 3
X = standard configuration
O = open (no seal or flinger)
Others - refer to page 3
Example: GX = food grade grease with standard seals & flingers

Stainless Ball Solution® Pillow Block

CLASSIC or VALUE

Set screw locking stainless ball bearing Series "4Y"
Low backing height Series "10"
Polymer housing Series "G"



More Sizes / Styles
Inserts pgs F-5 to F-9
Eccentric inserts in SS or KG: pgs F-10 to F-34
QuiKlean® eccentric: pgs F-34 to F-47
Set screw inserts in SS or KG: pgs F-48 to F-72
QuiKlean® set screw: pgs F-72 to F-85

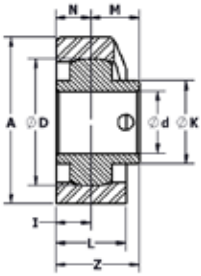

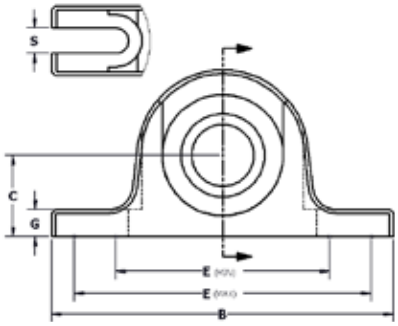

Polymer Housing

"x" indicates a 2-letter designation referring to lube & seals

MOUNTED BEARING PART NUMBER	d			Sphere OD size								Sph depth	Bolt size	Brg c/l to front	Brg c/l to back	Overall LTB of brg (I+M)	Brg collar size	Housing PN	Ball bearing PN
	mm	in	16th	D	A	B	C	E min	E max	G	L	I	S	M	N	Z	K		SETSCREW
4Y10GA8-12M x	12			1.575										0.61	0.41		0.97	10GA	4Y203-12M x
4Y10GA8-08 x		1/2	8	40	0.0	0.0	0.0	0.0	0.0	0.0	0.0	0.0		15.5	10.4	0.0	24.6		4Y203-08 x
4Y10GA8-09 x		9/16	9																4Y203-09 x
4Y10GA8-15M x	15																		4Y203-15M x
4Y10GA8-10 x		5/8	10																4Y203-10 x
4Y10GA8-17M x	17																		4Y203-17M x
4Y10GB8-12M x	12			1.850	2.63	5.25	1.25	3.25	4.38	0.44	1.38	0.69	3/8"	0.72	0.5	1.41	1.14	10GB	4Y204-12M x
4Y10GB8-08 x		1/2	8	47	66.7	133.4	31.8	82.6	111.3	11.2	35.1	17.5		18.3	12.7	35.8	29.0		4Y204-08 x
4Y10GB8-15M x	15																		4Y204-15M x
4Y10GB8-10 x		5/8	10																4Y204-10 x
4Y10GB8-17M x	17																		4Y204-17M x
4Y10GB8-11 x		11/16	11																4Y204-11 x
4Y10GB8-12 x		3/4	12																4Y204-12 x
4Y10GB8-20M x	20																		4Y204-20M x
4Y10GC8-12 x		3/4	12	2.047	2.81	5.5	1.31	3.44	4.63	0.44	1.5	0.75	3/8"	0.78	0.56	1.53	1.34	10GC	4Y205-12 x
4Y10GC8-14 x		7/8	14	52	71.4	139.7	33.3	87.4	117.6	11.2	38.1	19.1		19.8	14.2	38.9	34.0		4Y205-14 x
4Y10GC8-15 x		15/16	15																4Y205-15 x
4Y10GC8-25M x	25																		4Y205-25M x
4Y10GC8-16 x		1	16																4Y205-16 x
4Y10GD8-16 x		1	16	2.441	3.25	6.25	1.56	4.13	5.13	0.56	1.75	0.88	1/2"	0.87	0.63	1.75	1.59	10GD	4Y206-16 x
4Y10GD8-17 x		1-1/16	17	62	82.6	158.8	39.6	104.9	130.3	14.2	44.5	22.4		22.1	16.0	44.5	40.4		4Y206-17 x
4Y10GD8-18 x		1-1/8	18																4Y206-18 x
4Y10GD8-30M x	30																		4Y206-30M x
4Y10GD8-19 x		1-3/16	19																4Y206-19 x
4Y10GD8-20 x		1-1/4	20																4Y206-20 x
4Y10GE8-19 x		1-3/16	19	2.835	3.81	6.56	1.81	4.69	5.44	0.63	1.75	0.88	1/2"	1	0.69	1.88	1.84	10GE	4Y207-19 x
4Y10GE8-20 x		1-1/4	20	72	96.8	166.6	46.0	119.1	138.2	16.0	44.5	22.4		25.4	17.5	47.8	46.7		4Y207-20 x
4Y10GE8-21 x		1-5/16	21																4Y207-21 x
4Y10GE8-22 x		1-3/8	22																4Y207-22 x
4Y10GE8-35M x	35																		4Y207-35M x
4Y10GE8-23 x		1-7/16	23																4Y207-23 x
4Y10GF8-23 x		1-7/16	23	3.150	4.13	7.25	1.94	5	6.13	0.56	1.94	0.97	1/2"	1.19	0.75	2.16	2.08	10GF	4Y208-23 x
4Y10GF8-24 x		1-1/2	24	80	104.8	184.2	49.3	127.0	155.7	14.2	49.3	24.6		30.2	19.1	54.9	52.8		4Y208-24 x
4Y10GF8-40M x	40																		4Y208-40M x
4Y10GG8-24 x		1-1/2	24	3.346	4.31	7.44	2.06	5.31	6.31	0.69	2	1	1/2"	1.19	0.75	2.19	2.31	10GG	4Y209-24 x
4Y10GG8-26 x		1-5/8	26	85	109.5	189.0	52.3	134.9	160.3	17.5	50.8	25.4		30.2	19.1	55.6	58.7		4Y209-26 x
4Y10GG8-27 x		1-11/16	27																4Y209-27 x
4Y10GG8-28 x		1-3/4	28																4Y209-28 x
4Y10GG8-45M x	45																		4Y209-45M x
4Y10GH8-28 x		1-3/4	28	3.543	4.56	8.13	2.19	5.88	6.75	0.69	2.25	1.13	5/8"	1.28	0.75	2.41	2.45	10GH	4Y210-28 x
4Y10GH8-30 x		1-7/8	30	90	115.8	206.5	55.6	149.4	171.5	17.5	57.2	28.6		32.5	19.1	61.1	62.2		4Y210-30 x
4Y10GH8-31 x		1-15/16	31																4Y210-31 x
4Y10GH8-50M x	50																		4Y210-50M x
4Y10GH8-32 x		2	32																4Y210-32 x
4Y10GI8-32 x		2	32	3.937	5.06	8.88	2.44	6.38	7.5	0.81	2.38	1.19	5/8"	1.31	0.87	2.50	2.76	10GI	4Y211-32 x
4Y10GI8-55M x	55			100	128.5	225.6	62.0	162.1	190.5	20.6	60.3	30.2		33.3	22.1	63.5	70.1		4Y211-55M x
4Y10GI8-35 x		2-3/16	35																4Y211-35 x
4Y10GI8-36 x		2-1/4	36																4Y211-36 x
4Y10GJ8-36 x		2-1/4	36	4.331	5.44	9.5	2.69	6.44	8.13	0.81	2.5	1.25	5/8"	1.56	1	2.81	3.03	10GJ	4Y212-36 x
4Y10GJ8-60M x	60			110	138.2	241.3	68.3	163.6	206.5	20.6	63.5	31.8		39.6	25.4	71.4	77.0		4Y212-60M x
4Y10GJ8-39 x		2-7/16	39																4Y212-39 x
4Y10GK8-39 x		2-7/16	39	4.921	6.38	10.75	3.13	7.44	9.13	1.06	2.75	1.38	3/4"	1.75	1.19	3.13	3.43	10GK	4Y214-39 x
4Y10GK8-40 x		2-1/2	40	125	161.9	273.1	79.5	189.0	231.9	26.9	69.9	34.9		44.5	30.2	79.4	87.1		4Y214-40 x
4Y10GK8-70M x	70																		4Y214-70M x
4Y10GK8-44 x		2-3/4	44																4Y214-44 x
4Y10GL8-40 x				5.128	6.63	11.75	3.25	8.25	9.75	0.75	2.87	1.44	7/8"	1.75	1.31	3.19	3.6	10GL	4Y215-40
4Y10GL8-43 x		2-11/16	43	130	168.3	298.5	82.6	209.6	247.7	19.1	72.9	36.6		44.5	33.3	81.0	91.4		4Y215-43 x
4Y10GL8-44 x		2-3/4	44																4Y215-44 x
4Y10GL8-45 x		2-13/16	45																4Y215-45 x
4Y10GL8-47 x		2-15/16	47																4Y215-47 x
4Y10GL8-75M x	75																		4Y215-75M x
4Y10GL8-48 x		3	48																4Y215-48 x

X indicates a 2-letter designation for lube & seals

G = food grade grease
F = food grade EPL
Other alpha - refer to page 3
X = standard configuration
O = open (no seal or flinger)
Others - refer to page 3

Example: GX = food grade grease with standard seals & flingers

Stainless Ball Solution®
Tapped Base Pillow Block

CLASSIC or VALUE

Set screw locking stainless ball bearing Series "4Y"
Tapped base housing Series "9"
Stainless housing Series "A"



More Sizes / Styles
Inserts pgs F-5 to F-9
Eccentric inserts in SS or KG: pgs F-10 to F-34
QuiKlean® eccentric: pgs F-34 to F-47
Set screw inserts in SS or KG: pgs F-48 to F-72
QuiKlean® set screw: pgs F-72 to F-85

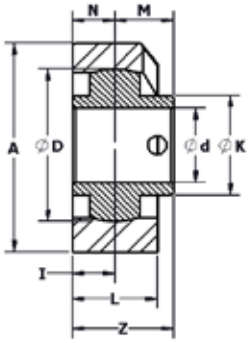

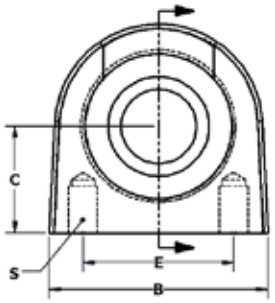

Stainless Housing

"x" indicates a 2-letter designation referring to lube & seals

MOUNTED BEARING PART NUMBER	d			Sphere OD size						Sph depth	Bolt size	Brg c/l to front	Brg c/l to back	Overall LTB of brg (I+M)	Brg collar size	Housing PN	Ball bearing PN
	mm	in	16th	D	A	B	C	E	L	I	S	M	N	Z	K		SETSCREW
4Y9AA8-12M x	12			1.575	2.41	2.88	1.31	2	1.13	0.56	3/8-16	0.61	0.41	1.17	0.97	9AA	4Y203-12M x
4Y9AA8-08 x		1/2	8	40	61.2	73.2	33.3	50.8	28.7	14.2		15.5	10.4	29.7	24.6		4Y203-08 x
4Y9AA8-09 x		9/16	9														4Y203-09 x
4Y9AA8-15M x	15																4Y203-15M x
4Y9AA8-10 x		5/8	10														4Y203-10 x
4Y9AA8-17M x	17																4Y203-17M x
4Y9AB8-12M x	12			1.850	2.53	2.88	1.31	2	1.13	0.56	3/8-16	0.72	0.5	1.28	1.14	9AB	4Y204-12M x
4Y9AB8-08 x		1/2	8	47	64.3	73.2	33.3	50.8	28.7	14.2		18.3	12.7	32.5	29.0		4Y204-08 x
4Y9AB8-15M x	15																4Y204-15M x
4Y9AB8-10 x		5/8	10														4Y204-10 x
4Y9AB8-17M x	17																4Y204-17M x
4Y9AB8-11 x		11/16	11														4Y204-11 x
4Y9AB8-12 x		3/4	12														4Y204-12 x
4Y9AB8-20M x	20																4Y204-20M x
4Y9AC8-12 x		3/4	12	2.047	2.81	3	1.44	2	1.13	0.56	3/8-16	0.78	0.56	1.34	1.34	9AC	4Y205-12 x
4Y9AC8-14 x		7/8	14	52	71.4	76.2	36.6	50.8	28.7	14.2		19.8	14.2	34.0	34.0		4Y205-14 x
4Y9AC8-15 x		15/16	15														4Y205-15 x
4Y9AC8-25M x	25																4Y205-25M x
4Y9AC8-16 x		1	16														4Y205-16 x
4Y9AD8-16 x		1	16	2.441	3.25	4	1.69	3	1.47	0.74	7/16-14	0.87	0.63	1.61	1.59	9AD	4Y206-16 x
4Y9AD8-17 x		1-1/16	17	62	82.6	101.6	42.9	76.2	37.3	18.8		22.1	16.0	40.9	40.4		4Y206-17 x
4Y9AD8-18 x		1-1/8	18														4Y206-18 x
4Y9AD8-30M x	30																4Y206-30M x
4Y9AD8-19 x		1-3/16	19														4Y206-19 x
4Y9AD8-20 x		1-1/4	20														4Y206-20 x
4Y9AE8-19 x		1-3/16	19	2.835	3.69	4.25	1.88	3.25	1.47	0.74	1/2-13	1	0.69	1.74	1.84	9AE	4Y207-19 x
4Y9AE8-20 x		1-1/4	20	72	93.7	108.0	47.8	82.6	37.3	18.8		25.4	17.5	44.2	46.7		4Y207-20 x
4Y9AE8-21 x		1-5/16	21														4Y207-21 x
4Y9AE8-22 x		1-3/8	22														4Y207-22 x
4Y9AE8-35M x	35																4Y207-35M x
4Y9AE8-23 x		1-7/16	23														4Y207-23 x
4Y9AF8-23 x		1-7/16	23	3.150	3.94	4.63	1.94	3.5	1.63	0.81	1/2-13	1.19	0.75	2.00	2.08	9AF	4Y208-23 x
4Y9AF8-24 x		1-1/2	24	80	100.1	117.6	49.3	88.9	41.4	20.6		30.2	19.1	50.8	52.8		4Y208-24 x
4Y9AF8-40M x	40																4Y208-40M x
4Y9AG8-24 x		1-1/2	24	3.346	4.25	5	2.125	3.75	1.72	0.86	1/2-13	1.19	0.75	2.05	2.31	9AG	4Y209-24 x
4Y9AG8-26 x		1-5/8	26	85	108.0	127.0	54.0	95.3	43.7	21.8		30.2	19.1	52.1	58.7		4Y209-26 x
4Y9AG8-27 x		1-11/16	27														4Y209-27 x
4Y9AG8-28 x		1-3/4	28														4Y209-28 x
4Y9AG8-45M x	45																4Y209-45M x
4Y9AH8-28 x		1-3/4	28	3.543	4.5	5.5	2.25	4	1.97	0.99	5/8-11	1.28	0.75	2.27	2.45	9AH	4Y210-28 x
4Y9AH8-30 x		1-7/8	30	90	114.3	139.7	57.2	101.6	50.0	25.1		32.5	19.1	57.7	62.2		4Y210-30 x
4Y9AH8-31 x		1-15/16	31														4Y210-31 x
4Y9AH8-50M x	50																4Y210-50M x
4Y9AH8-32 x		2	32														4Y210-32 x
4Y9AI8-32 x		2	32	3.937	4.72	5.5	2.25	4	1.97	0.99	5/8-11	1.31	0.87	2.30	2.76	9AI	4Y211-32 x
4Y9AI8-55M x	55			100	119.9	139.7	57.2	101.6	50.0	25.1		33.3	22.1	58.4	70.1		4Y211-55M x
4Y9AI8-35 x		2-3/16	35														4Y211-35 x
4Y9AI8-36 x		2-1/4	36														4Y211-36 x
4Y9AJ8-36 x		2-1/4	36	4.331	5.38	6	2.75	4.25	1.97	0.99	5/8-11	1.56	1	2.55	3.03	9AJ	4Y212-36 x
4Y9AJ8-60M x	60			110	136.5	152.4	69.9	108.0	50.0	25.1		39.6	25.4	64.8	77.0		4Y212-60M x
4Y9AJ8-39 x		2-7/16	39														4Y212-39 x
4Y9AK8-39 x		2-7/16	39	4.921	6.06	7	3	5	1.97	0.99	3/4-10	1.75	1.19	2.74	3.43	9AK	4Y214-39 x
4Y9AK8-40 x		2-1/2	40	125	154.0	177.8	76.2	127.0	50.0	25.1		44.5	30.2	69.6	87.1		4Y214-40 x
4Y9AK8-70M x	70																4Y214-70M x
4Y9AK8-44 x		2-3/4	44														4Y214-44 x
4Y9AL8-40 x				5.128	6.75	7.5	3.5	5.25	1.97	0.99	7/8-9	1.75	1.31	2.74	3.6	9AL	4Y215-40
4Y9AL8-43 x		2-11/16	43	130	171.5	190.5	88.9	133.4	50.0	25.1		44.5	33.3	69.6	91.4		4Y215-43 x
4Y9AL8-44 x		2-3/4	44														4Y215-44 x
4Y9AL8-45 x		2-13/16	45														4Y215-45 x
4Y9AL8-47 x		2-15/16	47														4Y215-47 x
4Y9AL8-75M x	75																4Y215-75M x
4Y9AL8-48 x		3	48														4Y215-48 x

X indicates a 2-letter designation for lube & seals
G = food grade grease
F = food grade EPL
Other alpha - refer to page 3
X = standard configuration
O = open (no seal or flinger)
Others - refer to page 3
Example: GX = food grade grease with standard seals & flingers

Stainless Ball Solution®
Tapped Base Pillow Block

CLASSIC or VALUE

Set screw locking stainless ball bearing Series "4Y"
Tapped base housing Series "9"
Polymer housing Series "G"

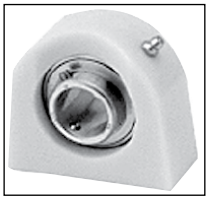

More Sizes / Styles
Inserts pgs F-5 to F-9
Eccentric inserts in SS or KG: pgs F-10 to F-34
QuiKlean® eccentric: pgs F-34 to F-47
Set screw inserts in SS or KG: pgs F-48 to F-72
QuiKlean® set screw: pgs F-72 to F-85

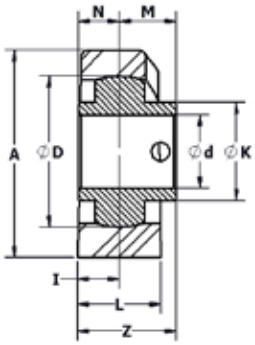

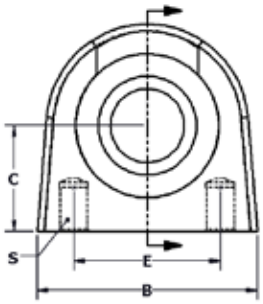

Polymer Housing

"x" indicates a 2-letter designation referring to lube & seals

MOUNTED BEARING PART NUMBER	d			Sphere OD size						Sph depth	Bolt size	Brg c/l to front	Brg c/l to back	Overall LTB of brg (I+M)	Brg collar size	Housing PN	Ball bearing PN
	mm	in	16th	D	A	B	C	E	L	I	S	M	N	Z	K		SETSCREW
4Y9GA8-12M x	12			1.575	2.46	2.94	1.31	2	1.12	0.56	3/8-16	0.61	0.41	1.17	0.97	9GA	4Y203-12M x
4Y9GA8-08 x		1/2	8	40	62.5	74.7	33.3	50.8	28.4	14.2		15.5	10.4	29.7	24.6		4Y203-08 x
4Y9GA8-09 x		9/16	9														4Y203-09 x
4Y9GA8-15M x	15																4Y203-15M x
4Y9GA8-10 x		5/8	10														4Y203-10 x
4Y9GA8-17M x	17																4Y203-17M x
4Y9GB8-12M x	12			1.850	2.58	2.96	1.31	2	1.13	0.56	3/8-16	0.72	0.5	1.28	1.14	9GB	4Y204-12M x
4Y9GB8-08 x		1/2	8	47	65.5	75.2	33.3	50.8	28.7	14.2		18.3	12.7	32.5	29.0		4Y204-08 x
4Y9GB8-15M x	15																4Y204-15M x
4Y9GB8-10 x		5/8	10														4Y204-10 x
4Y9GB8-17M x	17																4Y204-17M x
4Y9GB8-11 x		11/16	11														4Y204-11 x
4Y9GB8-12 x		3/4	12														4Y204-12 x
4Y9GB8-20M x	20																4Y204-20M x
4Y9GC8-12 x		3/4	12	2.047	2.81	3	1.44	2	1.14	0.57	3/8-16	0.78	0.56	1.35	1.34	9GC	4Y205-12 x
4Y9GC8-14 x		7/8	14	52	71.4	76.2	36.6	50.8	29.0	14.5		19.8	14.2	34.3	34.0		4Y205-14 x
4Y9GC8-15 x		15/16	15														4Y205-15 x
4Y9GC8-25M x	25																4Y205-25M x
4Y9GC8-16 x		1	16														4Y205-16 x
4Y9GD8-16 x		1	16	2.441	3.38	4.25	1.69	3	1.63	0.81	7/16-14	0.87	0.63	1.68	1.59	9GD	4Y206-16 x
4Y9GD8-17 x		1-1/16	17	62	85.9	108.0	42.9	76.2	41.4	20.6		22.1	16.0	42.7	40.4		4Y206-17 x
4Y9GD8-18 x		1-1/8	18														4Y206-18 x
4Y9GD8-30M x	30																4Y206-30M x
4Y9GD8-19 x		1-3/16	19														4Y206-19 x
4Y9GD8-20 x		1-1/4	20														4Y206-20 x
4Y9GE8-19 x		1-3/16	19	2.835	3.88	4.5	1.88	3.25	1.75	0.88	1/2-13	1	0.69	1.88	1.84	9GE	4Y207-19 x
4Y9GE8-20 x		1-1/4	20	72	98.6	114.3	47.8	82.6	44.5	22.4		25.4	17.5	47.8	46.7		4Y207-20 x
4Y9GE8-21 x		1-5/16	21														4Y207-21 x
4Y9GE8-22 x		1-3/8	22														4Y207-22 x
4Y9GE8-35M x	35																4Y207-35M x
4Y9GE8-23 x		1-7/16	23														4Y207-23 x
4Y9GF8-23 x		1-7/16	23	3.150	4.13	4.75	1.94	3.5	1.88	0.94	1/2-13	1.19	0.75	2.13	2.08	9GF	4Y208-23 x
4Y9GF8-24 x		1-1/2	24	80	104.8	120.7	49.3	88.9	47.8	23.9		30.2	19.1	54.1	52.8		4Y208-24 x
4Y9GF8-40M x	40																4Y208-40M x
4Y9GG8-24 x		1-1/2	24	3.346	4.38	5.25	2.125	3.75	1.97	0.98	1/2-13	1.19	0.75	2.17	2.31	9GG	4Y209-24 x
4Y9GG8-26 x		1-5/8	26	85	111.3	133.4	54.0	95.3	50.0	24.9		30.2	19.1	55.1	58.7		4Y209-26 x
4Y9GG8-27 x		1-11/16	27														4Y209-27 x
4Y9GG8-28 x		1-3/4	28														4Y209-28 x
4Y9GG8-45M x	45																4Y209-45M x
4Y9GH8-28 x		1-3/4	28	3.543	4.75	5.75	2.25	4	2.13	1.06	5/8-11	1.28	0.75	2.34	2.45	9GH	4Y210-28 x
4Y9GH8-30 x		1-7/8	30	90	120.7	146.1	57.2	101.6	54.1	26.9		32.5	19.1	59.4	62.2		4Y210-30 x
4Y9GH8-31 x		1-15/16	31														4Y210-31 x
4Y9GH8-50M x	50																4Y210-50M x
4Y9GH8-32 x		2	32														4Y210-32 x
4Y9GI8-32 x		2	32	3.937	4.88	5.75	2.25	4	2.31	1.16	5/8-11	1.31	0.87	2.47	2.76	9GI	4Y211-32 x
4Y9GI8-55M x	55			100	124.0	146.1	57.2	101.6	58.7	29.5		33.3	22.1	62.7	70.1		4Y211-55M x
4Y9GI8-35 x		2-3/16	35														4Y211-35 x
4Y9GI8-36 x		2-1/4	36														4Y211-36 x
4Y9GJ8-36 x		2-1/4	36	4.331	5.75	6.5	2.75	4.25	2.44	1.22	5/8-11	1.56	1	2.78	3.03	9GJ	4Y212-36 x
4Y9GJ8-60M x	60			110	146.1	165.1	69.9	108.0	62.0	31.0		39.6	25.4	70.6	77.0		4Y212-60M x
4Y9GJ8-39 x		2-7/16	39														4Y212-39 x
4Y9GK8-39 x		2-7/16	39	4.921	6.38	7.5	3	5	2.5	1.25	3/4-10	1.75	1.19	3.00	3.43	9GK	4Y214-39 x
4Y9GK8-40 x		2-1/2	40	125	162.1	190.5	76.2	127.0	63.5	31.8		44.5	30.2	76.2	87.1		4Y214-40 x
4Y9GK8-70M x	70																4Y214-70M x
4Y9GK8-44 x		2-3/4	44														4Y214-44 x
4Y9GL8-40 x				5.128	7	8	3.5	5.25	2.88	1.44	3/4-10	1.75	1.31	3.19	3.6	9GL	4Y215-40
4Y9GL8-43 x		2-11/16	43	130	177.8	203.2	88.9	133.4	73.2	36.6		44.5	33.3	81.0	91.4		4Y215-43 x
4Y9GL8-44 x		2-3/4	44														4Y215-44 x
4Y9GL8-45 x		2-13/16	45														4Y215-45 x
4Y9GL8-47 x		2-15/16	47														4Y215-47 x
4Y9GL8-75M x	75																4Y215-75M x
4Y9GL8-48 x		3	48														4Y215-48 x

X indicates a 2-letter designation for lube & seals
G = food grade grease
F = food grade EPL
Other alpha - refer to page 3
X = standard configuration
O = open (no seal or flinger)
Others - refer to page 3
Example: GX = food grade grease with standard seals & flingers

Stainless Ball Solution®
Two-Bolt Flange

CLASSIC or VALUE

Set screw locking stainless ball bearing Series "4Y"
Standard two-bolt pattern Series "2"
Stainless housing Series "A"

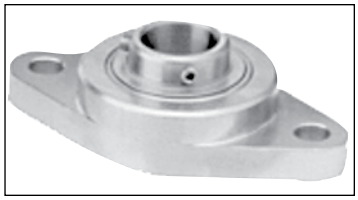

More Sizes / Styles
Inserts pgs F-5 to F-9
Eccentric inserts in SS or KG: pgs F-10 to F-34
QuiKlean® eccentric: pgs F-34 to F-47
Set screw inserts in SS or KG: pgs F-48 to F-72
QuiKlean® set screw: pgs F-72 to F-85

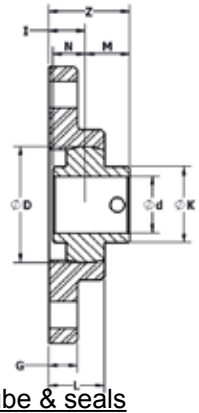

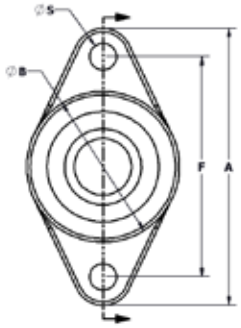

Stainless Housing

"x" indicates a 2-letter designation referring to lube & seals

MOUNTED BEARING PART NUMBER	d			Sphere OD size						Sph depth	Bolt size	Brg c/l to front	Brg c/l to back	Overall LTB of brg + hsg (I+M)	Brg collar size	Housing PN	Ball bearing PN
	mm	in	16th	D	A	B	F	G	L	I	S	M	N	Z	K		SETSCREW
4Y2AA8-12M x	12			1.575	3.88	2.15	3	0.44	0.85	0.53	3/8"	0.61	0.41	1.14	0.97	2AA	4Y203-12M x
4Y2AA8-08 x		1/2	8	40	98.6	54.6	76.2	11.2	21.6	13.5		15.5	10.4	29.0	24.6		4Y203-08 x
4Y2AA8-09 x		9/16	9														4Y203-09 x
4Y2AA8-15M x	15																4Y203-15M x
4Y2AA8-10 x		5/8	10														4Y203-10 x
4Y2AA8-17M x	17																4Y203-17M x
4Y2AB8-12M x	12			1.850	4.41	2.42	3.53	0.44	0.95	0.59	3/8"	0.72	0.5	1.31	1.14	2AB	4Y204-12M x
4Y2AB8-08 x		1/2	8	47	112.0	61.5	89.7	11.2	24.1	15.0		18.3	12.7	33.3	29.0		4Y204-08 x
4Y2AB8-15M x	15																4Y204-15M x
4Y2AB8-10 x		5/8	10														4Y204-10 x
4Y2AB8-17M x	17																4Y204-17M x
4Y2AB8-11 x		11/16	11														4Y204-11 x
4Y2AB8-12 x		3/4	12														4Y204-12 x
4Y2AB8-20M x	20																4Y204-20M x
4Y2AC8-12 x		3/4	12	2.047	4.89	2.66	3.89	0.5	0.97	0.63	7/16"	0.78	0.56	1.41	1.34	2AC	4Y205-12 x
4Y2AC8-14 x		7/8	14	52	124.2	67.6	98.8	12.7	24.6	16.0		19.8	14.2	35.8	34.0		4Y205-14 x
4Y2AC8-15 x		15/16	15														4Y205-15 x
4Y2AC8-25M x	25																4Y205-25M x
4Y2AC8-16 x		1	16														4Y205-16 x
4Y2AD8-16 x		1	16	2.441	5.59	3.12	4.6	0.5	1.07	0.66	7/16"	0.87	0.63	1.53	1.59	2AD	4Y206-16 x
4Y2AD8-17 x		1-1/16	17	62	142.0	79.2	116.8	12.7	27.2	16.8		22.1	16.0	38.9	40.4		4Y206-17 x
4Y2AD8-18 x		1-1/8	18														4Y206-18 x
4Y2AD8-30M x	30																4Y206-30M x
4Y2AD8-19 x		1-3/16	19														4Y206-19 x
4Y2AD8-20 x		1-1/4	20														4Y206-20 x
4Y2AE8-19 x		1-3/16	19	2.835	6.25	3.62	5.12	0.56	1.22	0.79	1/2"	1	0.69	1.79	1.84	2AE	4Y207-19 x
4Y2AE8-20 x		1-1/4	20	72	158.8	91.9	130.0	14.2	31.0	20.1		25.4	17.5	45.5	46.7		4Y207-20 x
4Y2AE8-21 x		1-5/16	21														4Y207-21 x
4Y2AE8-22 x		1-3/8	22														4Y207-22 x
4Y2AE8-35M x	35																4Y207-35M x
4Y2AE8-23 x		1-7/16	23														4Y207-23 x
4Y2AF8-23 x		1-7/16	23	3.150	6.78	4	5.66	0.56	1.24	0.77	1/2"	1.19	0.75	1.96	2.08	2AF	4Y208-23 x
4Y2AF8-24 x		1-1/2	24	80	172.2	101.6	143.8	14.2	31.5	19.6		30.2	19.1	49.8	52.8		4Y208-24 x
4Y2AF8-40M x	40																4Y208-40M x
4Y2AG8-24 x		1-1/2	24	3.346	6.97	4.25	5.84	0.63	1.24	0.76	1/2"	1.19	0.75	1.95	2.31	2AG	4Y209-24 x
4Y2AG8-26 x		1-5/8	26	85	177.0	108.0	148.3	16.0	31.5	19.3		30.2	19.1	49.5	58.7		4Y209-26 x
4Y2AG8-27 x		1-11/16	27														4Y209-27 x
4Y2AG8-28 x		1-3/4	28														4Y209-28 x
4Y2AG8-45M x	45																4Y209-45M x
4Y2AH8-28 x		1-3/4	28	3.543	7.31	4.56	6.19	0.63	1.24	0.77	1/2"	1.28	0.75	2.05	2.45	2AH	4Y210-28 x
4Y2AH8-30 x		1-7/8	30	90	185.7	115.8	157.2	16.0	31.5	19.6		32.5	19.1	52.1	62.2		4Y210-30 x
4Y2AH8-31 x		1-15/16	31														4Y210-31 x
4Y2AH8-50M x	50																4Y210-50M x
4Y2AH8-32 x		2	32														4Y210-32 x
4Y2AI8-32 x		2	32	3.937	8.63	5.06	7.25	0.69	1.47	0.92	5/8"	1.32	0.87	2.24	2.76	2AI	4Y211-32 x
4Y2AI8-55M x	55			100	219.2	128.5	184.2	17.5	37.3	23.4		33.5	22.1	56.9	70.1		4Y211-55M x
4Y2AI8-35 x		2-3/16	35														4Y211-35 x
4Y2AI8-36 x		2-1/4	36														4Y211-36 x
4Y2AJ8-36 x		2-1/4	36	4.331	9.33	5.62	7.95	0.69	1.66	1.07	5/8"	1.56	1	2.63	3.03	2AJ	4Y212-36 x
4Y2AJ8-60M x	60			110	237.0	142.7	201.9	17.5	42.2	27.2		39.6	25.4	66.8	77.0		4Y212-60M x
4Y2AJ8-39 x		2-7/16	39														4Y212-39 x
4Y2AK8-39 x		2-7/16	39	4.921	9.69	6.44	8.31	0.75	1.86	1.25	5/8"	1.75	1.19	3.00	3.43	2AK	4Y214-39 x
4Y2AK8-40 x		2-1/2	40	125	246.1	163.6	211.1	19.1	47.2	31.8		44.5	30.2	76.2	87.1		4Y214-40 x
4Y2AK8-70M x	70																4Y214-70M x
4Y2AK8-44 x		2-3/4	44														4Y214-44 x
4Y2AL8-40 x				5.128	10.13	6.5	8.5	1	1.98	1.39	3/4"	1.75	1.31	3.14	3.6	2AL	4Y215-40
4Y2AL8-43 x		2-11/16	43	130	257.3	165.1	215.9	25.4	50.3	35.3		44.5	33.3	79.8	91.4		4Y215-43 x
4Y2AL8-44 x		2-3/4	44														4Y215-44 x
4Y2AL8-45 x		2-13/16	45														4Y215-45 x
4Y2AL8-47 x		2-15/16	47														4Y215-47 x
4Y2AL8-75M x	75																4Y215-75M x
4Y2AL8-48 x		3	48														4Y215-48 x

X indicates a 2-letter designation for lube & seals
G = food grade grease
F = food grade EPL
Other alpha - refer to page 3
X = standard configuration
O = open (no seal or flinger)
Others - refer to page 3
Example: GX = food grade grease with standard seals & flingers

Stainless Ball Solution®
Two-Bolt Flange

CLASSIC or VALUE

Set screw locking stainless ball bearing Series “4Y”
Standard two-bolt pattern Series “2”
Polymer housing Series “G”



More Sizes / Styles
Inserts pgs F-5 to F-9
Eccentric inserts in SS or KG: pgs F-10 to F-34
QuiKlean® eccentric: pgs F-34 to F-47
Set screw inserts in SS or KG: pgs F-48 to F-72
QuiKlean® set screw: pgs F-72 to F-85

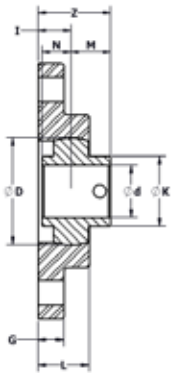

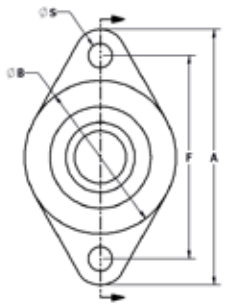

Polymer Housing

“x” indicates a 2-letter designation referring to lube & seals

MOUNTED BEARING PART NUMBER	d			Sphere OD size						Sph depth	Bolt size	Brg c/l to front	Brg c/l to back	Overall LTB of brg (I+M)	Brg collar size	Housing PN	Ball bearing PN
	mm	in	16th	D	A	B	F	G	L	I	S	M	N	Z	K	PN	SETSCREW
4Y2GA8-12M x	12			1.575	3.88	2.15	3	0.44	0.85	0.53	3/8"	0.61	0.41	1.14	0.97	2GA	4Y203-12M x
4Y2GA8-08 x		1/2	8	40	98.6	54.6	76.2	11.2	21.6	13.5		15.5	10.4	29.0	24.6		4Y203-08 x
4Y2GA8-09 x		9/16	9														4Y203-09 x
4Y2GA8-15M x	15																4Y203-15M x
4Y2GA8-10 x		5/8	10														4Y203-10 x
4Y2GA8-17M x	17																4Y203-17M x
4Y2GB8-12M x	12			1.850	4.41	2.69	3.53	0.44	0.95	0.59	3/8"	0.72	0.5	1.31	1.14	2GB	4Y204-12M x
4Y2GB8-08 x		1/2	8	47	112.0	68.3	89.7	11.2	24.1	15.0		18.3	12.7	33.3	29.0		4Y204-08 x
4Y2GB8-15M x	15																4Y204-15M x
4Y2GB8-10 x		5/8	10														4Y204-10 x
4Y2GB8-17M x	17																4Y204-17M x
4Y2GB8-11 x		11/16	11														4Y204-11 x
4Y2GB8-12 x		3/4	12														4Y204-12 x
4Y2GB8-20M x	20																4Y204-20M x
4Y2GC8-12 x		3/4	12	2.047	4.77	2.93	3.89	0.5	0.99	0.63	7/16"	0.78	0.56	1.41	1.34	2GC	4Y205-12 x
4Y2GC8-14 x		7/8	14	52	121.2	74.4	98.8	12.7	25.1	16.0		19.8	14.2	35.8	34.0		4Y205-14 x
4Y2GC8-15 x		15/16	15														4Y205-15 x
4Y2GC8-25M x	25																4Y205-25M x
4Y2GC8-16 x		1	16														4Y205-16 x
4Y2GD8-16 x		1	16	2.441	5.72	3.625	4.59	0.5	1.07	0.66	7/16"	0.87	0.63	1.53	1.59	2GD	4Y206-16 x
4Y2GD8-17 x		1-1/16	17	62	145.3	92.1	116.6	12.7	27.2	16.8		22.1	16.0	38.9	40.4		4Y206-17 x
4Y2GD8-18 x		1-1/8	18														4Y206-18 x
4Y2GD8-30M x	30																4Y206-30M x
4Y2GD8-19 x		1-3/16	19														4Y206-19 x
4Y2GD8-20 x		1-1/4	20														4Y206-20 x
4Y2GE8-19 x		1-3/16	19	2.835	6.25	4	5.12	0.56	1.22	0.79	1/2"	1	0.69	1.79	1.84	2GE	4Y207-19 x
4Y2GE8-20 x		1-1/4	20	72	158.8	101.6	130.0	14.2	31.0	20.1		25.4	17.5	45.5	46.7		4Y207-20 x
4Y2GE8-21 x		1-5/16	21														4Y207-21 x
4Y2GE8-22 x		1-3/8	22														4Y207-22 x
4Y2GE8-35M x	35																4Y207-35M x
4Y2GE8-23 x		1-7/16	23														4Y207-23 x
4Y2GF8-23 x		1-7/16	23	3.150	6.78	4.56	5.66	0.56	1.24	0.77	1/2"	1.19	0.75	1.96	2.08	2GF	4Y208-23 x
4Y2GF8-24 x		1-1/2	24	80	172.2	115.8	143.8	14.2	31.5	19.6		30.2	19.1	49.8	52.8		4Y208-24 x
4Y2GF8-40M x	40																4Y208-40M x
4Y2GG8-24 x		1-1/2	24	3.346	6.97	4.74	5.84	0.63	1.24	0.76	1/2"	1.19	0.75	1.95	2.31	2GG	4Y209-24 x
4Y2GG8-26 x		1-5/8	26	85	177.0	120.4	148.3	16.0	31.5	19.3		30.2	19.1	49.5	58.7		4Y209-26 x
4Y2GG8-27 x		1-11/16	27														4Y209-27 x
4Y2GG8-28 x		1-3/4	28														4Y209-28 x
4Y2GG8-45M x	45																4Y209-45M x
4Y2GH8-28 x		1-3/4	28	3.543	7.31	5.06	6.19	0.63	1.24	0.77	1/2"	1.28	0.75	2.05	2.45	2GH	4Y210-28 x
4Y2GH8-30 x		1-7/8	30	90	185.7	128.5	157.2	16.0	31.5	19.6		32.5	19.1	52.1	62.2		4Y210-30 x
4Y2GH8-31 x		1-15/16	31														4Y210-31 x
4Y2GH8-50M x	50																4Y210-50M x
4Y2GH8-32 x		2	32														4Y210-32 x
4Y2GI8-32 x		2	32	3.937	8.63	5.87	7.25	0.69	1.47	0.92	5/8"	1.32	0.87	2.24	2.76	2GI	4Y211-32 x
4Y2GI8-55M x	55			100	219.2	149.1	184.2	17.5	37.3	23.4		33.5	22.1	56.9	70.1		4Y211-55M x
4Y2GI8-35 x		2-3/16	35														4Y211-35 x
4Y2GI8-36 x		2-1/4	36														4Y211-36 x
4Y2GJ8-36 x		2-1/4	36	4.331	9.33	6.56	7.95	0.69	1.66	1.07	5/8"	1.56	1	2.63	3.03	2GJ	4Y212-36 x
4Y2GJ8-60M x	60			110	237.0	166.6	201.9	17.5	42.2	27.2		39.6	25.4	66.8	77.0		4Y212-60M x
4Y2GJ8-39 x		2-7/16	39														4Y212-39 x
4Y2GK8-39 x		2-7/16	39	4.921	9.69	6.94	8.31	0.75	1.86	1.25	5/8"	1.75	1.19	3.00	3.43	2GK	4Y214-39 x
4Y2GK8-40 x		2-1/2	40	125	246.1	176.3	211.1	19.1	47.2	31.8		44.5	30.2	76.2	87.1		4Y214-40 x
4Y2GK8-70M x	70																4Y214-70M x
4Y2GK8-44 x		2-3/4	44														4Y214-44 x
4Y2GL8-40 x				5.128	10.13	6.94	8.5	1	1.98	1.39	3/4"	1.75	1.31	3.14	3.6	2GL	4Y215-40
4Y2GL8-43 x		2-11/16	43	130	257.3	176.3	215.9	25.4	50.3	35.3		44.5	33.3	79.8	91.4		4Y215-43 x
4Y2GL8-44 x		2-3/4	44														4Y215-44 x
4Y2GL8-45 x		2-13/16	45														4Y215-45 x
4Y2GL8-47 x		2-15/16	47														4Y215-47 x
4Y2GL8-75M x	75																4Y215-75M x
4Y2GL8-48 x		3	48														4Y215-48 x

X indicates a 2-letter designation for lube & seals
G = food grade grease
F = food grade EPL
Other alpha - refer to page 3
X = standard configuration
O = open (no seal or flinger)
Others - refer to page 3
Example: GX = food grade grease with standard seals & flingers

Stainless Ball Solution®
Small Two-Bolt Flange

CLASSIC or VALUE

Set screw locking stainless ball bearing Series “4Y”
Small two-bolt pattern Series “6”
Stainless housing Series “A”



More Sizes / Styles
Inserts pgs F-5 to F-9
Eccentric inserts in SS or KG: pgs F-10 to F-34
QuiKlean® eccentric: pgs F-34 to F-47
Set screw inserts in SS or KG: pgs F-48 to F-72
QuiKlean® set screw: pgs F-72 to F-85

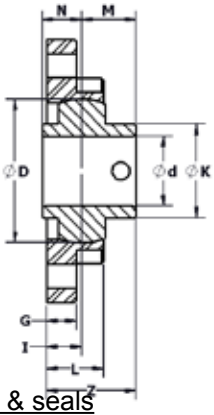

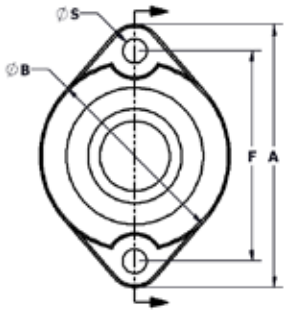

Stainless Housing

“x” indicates a 2-letter designation referring to lube & seals

MOUNTED BEARING PART NUMBER	d			Sphere OD size						Sph depth	Bolt size	Brg c/l to front	Brg c/l to back	Overall LTB of brg + hsg (I+M)	Brg collar size	Housing PN	Ball bearing PN
	mm	in	16th	D	A	B	F	G	L	I	S	M	N	Z	K		SETSCREW
4Y6AA8-12M x	12			1.575	3.19	2.09	2.5	0.38	0.7	0.42	1/4	0.61	0.41	1.03	0.97	6AA	4Y203-12M x
4Y6AA8-08 x		1/2	8	40	81.0	53.1	63.5	9.7	17.8	10.7		15.5	10.4	26.2	24.6		4Y203-08 x
4Y6AA8-09 x		9/16	9														4Y203-09 x
4Y6AA8-15M x	15																4Y203-15M x
4Y6AA8-10 x		5/8	10														4Y203-10 x
4Y6AA8-17M x	17																4Y203-17M x
4Y6AB8-12M x	12			1.850	3.56	2.42	2.81	0.42	0.86	0.5	5/16	0.72	0.5	1.22	1.14	6AB	4Y204-12M x
4Y6AB8-08 x		1/2	8	47	90.4	61.5	71.4	10.7	21.8	12.7		18.3	12.7	31.0	29.0		4Y204-08 x
4Y6AB8-15M x	15																4Y204-15M x
4Y6AB8-10 x		5/8	10														4Y204-10 x
4Y6AB8-17M x	17																4Y204-17M x
4Y6AB8-11 x		11/16	11														4Y204-11 x
4Y6AB8-12 x		3/4	12														4Y204-12 x
4Y6AB8-20M x	20																4Y204-20M x
4Y6AC8-12 x		3/4	12	2.047	3.75	2.72	3	0.42	0.81	0.5	5/16	0.78	0.56	1.28	1.34	6AC	4Y205-12 x
4Y6AC8-14 x		7/8	14	52	95.3	69.1	76.2	10.7	20.6	12.7		19.8	14.2	32.5	34.0		4Y205-14 x
4Y6AC8-15 x		15/16	15														4Y205-15 x
4Y6AC8-25M x	25																4Y205-25M x
4Y6AC8-16 x		1	16														4Y205-16 x
4Y6AD8-16 x		1	16	2.441	4.44	3.09	3.56	0.47	0.96	0.56	3/8	0.87	0.63	1.43	1.59	6AD	4Y206-16 x
4Y6AD8-17 x		1-1/16	17	62	112.8	78.5	90.4	11.9	24.4	14.2		22.1	16.0	36.3	40.4		4Y206-17 x
4Y6AD8-18 x		1-1/8	18														4Y206-18 x
4Y6AD8-30M x	30																4Y206-30M x
4Y6AD8-19 x		1-3/16	19														4Y206-19 x
4Y6AD8-20 x		1-1/4	20														4Y206-20 x
4Y6AE8-19 x		1-3/16	19	2.835	4.94	3.5	3.94	0.5	0.96	0.56	3/8	1	0.69	1.56	1.84	6AE	4Y207-19 x
4Y6AE8-20 x		1-1/4	20	72	125.5	88.9	100.1	12.7	24.4	14.2		25.4	17.5	39.6	46.7		4Y207-20 x
4Y6AE8-21 x		1-5/16	21														4Y207-21 x
4Y6AE8-22 x		1-3/8	22														4Y207-22 x
4Y6AE8-35M x	35																4Y207-35M x
4Y6AE8-23 x		1-7/16	23														4Y207-23 x

X indicates a 2-letter designation for lube & seals
G = food grade grease
F = food grade EPL
Other alpha - refer to page 3
X = standard configuration
O = open (no seal or flinger)
Others - refer to page 3
Example: GX = food grade grease with standard seals & flingers

Stainless Ball Solution®
Small Two-Bolt Flange

CLASSIC or VALUE

Set screw locking stainless ball bearing Series “4Y”
Small two-bolt pattern Series “6”
Polymer housing Series “G”

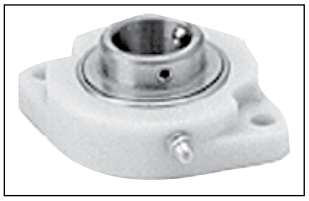

More Sizes / Styles
Inserts pgs F-5 to F-9
Eccentric inserts in SS or KG: pgs F-10 to F-34
QuiKlean® eccentric: pgs F-34 to F-47
Set screw inserts in SS or KG: pgs F-48 to F-72
QuiKlean® set screw: pgs F-72 to F-85

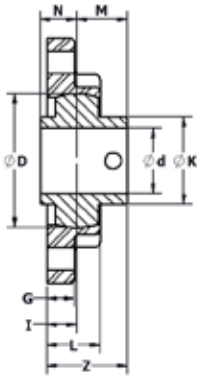

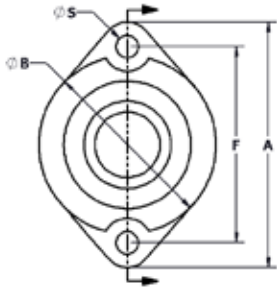

Polymer Housing

“x” indicates a 2-letter designation referring to lube & seals

MOUNTED BEARING PART NUMBER	d			Sphere OD size						Sph depth	Bolt size	Brg c/l to front	Brg c/l to back	Overall LTB of brg + hsg (I+M)	Brg collar size	Housing PN	Ball bearing PN
	mm	in	16th	D	A	B	F	G	L	I	S	M	N	Z	K		SETSCREW
4Y6GA8-12M x	12			1.575	3.19	2.09	2.5	0.38	0.7	0.42	1/4	0.61	0.41	1.03	0.97	6GA	4Y203-12M x
4Y6GA8-08 x		1/2	8	40	81.0	53.1	63.5	9.7	17.8	10.7		15.5	10.4	26.2	24.6		4Y203-08 x
4Y6GA8-09 x		9/16	9														4Y203-09 x
4Y6GA8-15M x	15																4Y203-15M x
4Y6GA8-10 x		5/8	10														4Y203-10 x
4Y6GA8-17M x	17																4Y203-17M x
4Y6GB8-12M x	12			1.850	3.56	2.42	2.81	0.42	0.86	0.5	5/16	0.72	0.5	1.22	1.14	6GB	4Y204-12M x
4Y6GB8-08 x		1/2	8	47	90.4	61.5	71.4	10.7	21.8	12.7		18.3	12.7	31.0	29.0		4Y204-08 x
4Y6GB8-15M x	15																4Y204-15M x
4Y6GB8-10 x		5/8	10														4Y204-10 x
4Y6GB8-17M x	17																4Y204-17M x
4Y6GB8-11 x		11/16	11														4Y204-11 x
4Y6GB8-12 x		3/4	12														4Y204-12 x
4Y6GB8-20M x	20																4Y204-20M x
4Y6GC8-12 x		3/4	12	2.047	3.75	2.72	3	0.42	0.81	0.46	5/16	0.78	0.56	1.24	1.34	6GC	4Y205-12 x
4Y6GC8-14 x		7/8	14	52	95.3	69.1	76.2	10.7	20.6	11.7		19.8	14.2	31.5	34.0		4Y205-14 x
4Y6GC8-15 x		15/16	15														4Y205-15 x
4Y6GC8-25M x	25																4Y205-25M x
4Y6GC8-16 x		1	16														4Y205-16 x
4Y6GD8-16 x		1	16	2.441	4.44	3.09	3.56	0.47	0.96	0.56	3/8	0.87	0.63	1.43	1.59	6GD	4Y206-16 x
4Y6GD8-17 x		1-1/16	17	62	112.8	78.5	90.4	11.9	24.4	14.2		22.1	16.0	36.3	40.4		4Y206-17 x
4Y6GD8-18 x		1-1/8	18														4Y206-18 x
4Y6GD8-30M x	30																4Y206-30M x
4Y6GD8-19 x		1-3/16	19														4Y206-19 x
4Y6GD8-20 x		1-1/4	20														4Y206-20 x
4Y6GE8-19 x		1-3/16	19	2.835	4.94	3.5	3.94	0.5	0.96	0.56	3/8	1	0.69	1.56	1.84	6GE	4Y207-19 x
4Y6GE8-20 x		1-1/4	20	72	125.5	88.9	100.1	12.7	24.4	14.2		25.4	17.5	39.6	46.7		4Y207-20 x
4Y6GE8-21 x		1-5/16	21														4Y207-21 x
4Y6GE8-22 x		1-3/8	22														4Y207-22 x
4Y6GE8-35M x	35																4Y207-35M x
4Y6GE8-23 x		1-7/16	23														4Y207-23 x

X indicates a 2-letter designation for lube & seals

G = food grade grease
F = food grade EPL
Other alpha - refer to page 3
X = standard configuration
O = open (no seal or flinger)
Others - refer to page 3

Example: GX = food grade grease with standard seals & flingers

Stainless Ball Solution®
Piloted Two-Bolt Flange

CLASSIC or VALUE

Set screw locking stainless ball bearing Series "4Y"
Standard two-bolt pattern Series "6_-SP"
Stainless housing Series "A"



More Sizes / Styles
Inserts pgs F-5 to F-9
Eccentric inserts in SS or KG: pgs F-10 to F-34
QuiKlean® eccentric: pgs F-34 to F-47
Set screw inserts in SS or KG: pgs F-48 to F-72
QuiKlean® set screw: pgs F-72 to F-85

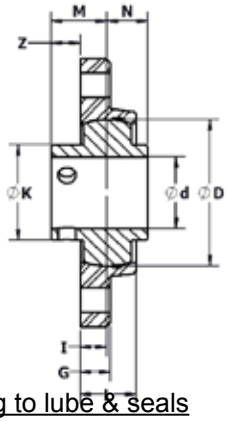

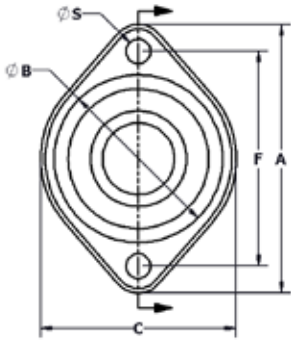

Stainless Housing

"x" indicates a 2-letter designation referring to lube & seals

MOUNTED BEARING PART NUMBER	d			Sphere OD size		Boss dia					Sph depth	Bolt size	Brg c/l to front	Brg c/l to back	Overall LTB of brg (I+M)	Brg collar size	Housing PN	Ball bearing PN
	mm	in	16th	D	A	B	C	F	G	L	I	S	M	N	Z	K		SETSCREW
4Y6AB-SP8-12M x	12			1.850	3.56	2.12	2.5	2.81	0.35	0.73	0.35	5/16	0.72	0.5	1.07	1.14	6AB-SP	4Y204-12M x
4Y6AB-SP8-08 x		1/2	8	47	90.4	53.8	63.5	71.4	8.9	18.5	8.9		18.3	12.7	27.2	29.0		4Y204-08 x
4Y6AB-SP8-15M x	15																	4Y204-15M x
4Y6AB-SP8-10 x		5/8	10															4Y204-10 x
4Y6AB-SP8-17M x	17																	4Y204-17M x
4Y6AB-SP8-11 x		11/16	11															4Y204-11 x
4Y6AB-SP8-12 x		3/4	12															4Y204-12 x
4Y6AB-SP8-20M x	20																	4Y204-20M x
4Y6AC-SP8-12 x		3/4	12	2.047	3.75	2.34	2.72	3	0.42	0.78	0.38	5/16	0.78	0.56	1.16	1.34	6AC-SP	4Y205-12 x
4Y6AC-SP8-14 x		7/8	14	52	95.3	59.4	69.1	76.2	10.7	19.8	9.5		19.8	14.2	29.3	34.0		4Y205-14 x
4Y6AC-SP8-15 x		15/16	15															4Y205-15 x
4Y6AC-SP8-25M x	25																	4Y205-25M x
4Y6AC-SP8-16 x		1	16															4Y205-16 x

X indicates a 2-letter designation for lube & seals
G = food grade grease
F = food grade EPL
Other alpha - refer to page 3
X = standard configuration
O = open (no seal or flinger)
Others - refer to page 3
Example: GX = food grade grease with standard seals & flingers

Stainless Ball Solution® Hanger Bearing

CLASSIC or VALUE

Set screw locking stainless ball bearing Series "4Y"
Hanger pattern Series "8"
Stainless housing Series "A"

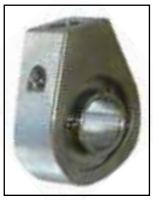

More Sizes / Styles
Inserts pgs F-5 to F-9
Eccentric inserts in SS or KG: pgs F-10 to F-34
QuiKlean® eccentric: pgs F-34 to F-47
Set screw inserts in SS or KG: pgs F-48 to F-72
QuiKlean® set screw: pgs F-72 to F-85

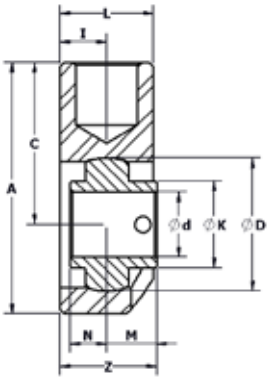

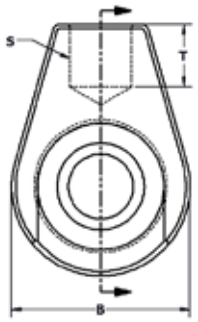

Stainless Housing

"x" indicates a 2-letter designation referring to lube & seals

MOUNTED BEARING PART NUMBER	d			Sphere OD size						Thread size		Brg c/l to front	Brg c/l to back	Overall LTB of brg (I+M)	Brg collar size	Housing	Ball bearing PN
	mm	in	16th	D	A	B	C	L	I	S	T	M	N	Z	K	PN	SETSCREW
4Y8AA8-12M x	12			1.575	2.94	2.13	1.88	1.19	0.59	1/2 - 14 NPSM	0.63	0.61	0.41	1.20	0.97	8AA	4Y203-12M x
4Y8AA8-08 x		1/2	8	40	74.7	54.1	47.8	30.2	15.0	5/8 - 11 UNC	16.0	15.5	10.4	30.5	24.6	8AA-01	4Y203-08 x
4Y8AA8-09 x		9/16	9							M12 - 1.75						8AA-03B	4Y203-09 x
4Y8AA8-15M x	15									5/8 - 18						8AA-01A	4Y203-15M x
4Y8AA8-10 x		5/8	10														4Y203-10 x
4Y8AA8-17M x	17																4Y203-17M x
4Y8AB8-12M x	12			1.850	3.75	2.5	2.5	1.44	0.72	3/4 - 14 NPSM	0.75	0.72	0.5	1.44	1.14	8AB	4Y204-12M x
4Y8AB8-08 x		1/2	8	47	95.3	63.5	63.5	36.6	18.3	5/8 - 11 UNC	19.1	18.3	12.7	36.6	29.0	8AB-03	4Y204-08 x
4Y8AB8-15M x	15									M16 - 2						8AB-03B	4Y204-15M x
4Y8AB8-10 x		5/8	10														4Y204-10 x
4Y8AB8-17M x	17																4Y204-17M x
4Y8AB8-11 x		11/16	11														4Y204-11 x
4Y8AB8-12 x		3/4	12														4Y204-12 x
4Y8AB8-20M x	20																4Y204-20M x
4Y8AC8-12 x		3/4	12	2.047	3.88	2.75	2.5	1.44	0.72	3/4 - 14 NPSM	0.75	0.78	0.56	1.50	1.34	8AC	4Y205-12 x
4Y8AC8-14 x		7/8	14	52	98.6	69.9	63.5	36.6	18.3		19.1	19.8	14.2	38.1	34.0		4Y205-14 x
4Y8AC8-15 x		15/16	15														4Y205-15 x
4Y8AC8-25M x	25																4Y205-25M x
4Y8AC8-16 x		1	16														4Y205-16 x
4Y8AD8-16 x		1	16	2.441	4.06	3.13	2.5	1.44	0.72	3/4 - 14 NPSM	0.75	0.87	0.63	1.59	1.59	8AD	4Y206-16 x
4Y8AD8-17 x		1-1/16	17	62	103.1	79.5	63.5	36.6	18.3	5/8 - 11 UNC	19.1	22.1	16.0	40.4	40.4	8AD-02	4Y206-17 x
4Y8AD8-18 x		1-1/8	18							M16 - 2						8AD-03	4Y206-18 x
4Y8AD8-30M x	30																4Y206-30M x
4Y8AD8-19 x		1-3/16	19														4Y206-19 x
4Y8AD8-20 x		1-1/4	20														4Y206-20 x
4Y8AE8-19 x		1-3/16	19	2.835	4.56	3.63	2.75	1.44	0.72	3/4 - 14 NPSM	0.75	1	0.69	1.72	1.84	8AE	4Y207-19 x
4Y8AE8-20 x		1-1/4	20	72	115.8	92.2	69.9	36.6	18.3	1 - 8 UNC	19.1	25.4	17.5	43.7	46.7	8AE-01	4Y207-20 x
4Y8AE8-21 x		1-5/16	21							5/8 - 11 NPSM						8AE-02	4Y207-21 x
4Y8AE8-22 x		1-3/8	22														4Y207-22 x
4Y8AE8-35M x	35																4Y207-35M x
4Y8AE8-23 x		1-7/16	23														4Y207-23 x
4Y8AF8-23 x		1-7/16	23	3.150	4.75	3.75	2.88	1.44	0.72	3/4 - 14 NPSM	0.75	1.19	0.75	1.91	2.08	8AF	4Y208-23 x
4Y8AF8-24 x		1-1/2	24	80	120.7	95.3	73.2	36.6	18.3	3/4 - 10 UNC	19.1	30.2	19.1	48.5	52.8	8AF-01	4Y208-24 x
4Y8AF8-40M x	40																4Y208-40M x
4Y8AG8-24 x		1-1/2	24	3.346	5.38	4.25	3.25	1.88	0.94	1 - 11 1/2 NPSM	0.81	1.19	0.75	2.13	2.31	8AG	4Y209-24 x
4Y8AG8-26 x		1-5/8	26	85	136.7	108.0	82.6	47.8	23.9		20.6	30.2	19	54.076	58.7		4Y209-26 x
4Y8AG8-27 x		1-11/16	27														4Y209-27 x
4Y8AG8-28 x		1-3/4	28														4Y209-28 x
4Y8AG8-45M x	45																4Y209-45M x
4Y8AH8-28 x		1-3/4	28	3.543	5.5	4.5	3.25	1.88	0.94	1 - 11 1/2 NPSM	0.81	1.28	0.75	2.22	2.45	8AH	4Y210-28 x
4Y8AH8-30 x		1-7/8	30	90	139.7	114.3	82.6	47.8	23.9	1 - 8 UNC	20.6	32.5	19.1	56.4	62.2	8AH-01	4Y210-30 x
4Y8AH8-31 x		1-15/16	31														4Y210-31 x
4Y8AH8-50M x	50																4Y210-50M x
4Y8AH8-32 x		2	32														4Y210-32 x
4Y8AI8-32 x		2	32	3.937	5.94	5	3.44	1.97	0.99	1 1/4 - 11 1/2 NPSM	1	1.32	0.87	2.31	2.76	8AI	4Y211-32 x
4Y8AI8-55M x	55			100	150.9	127.0	87.4	50.0	25.0	1 1/4 - 7 UNC	25.4	33.5	22.1	58.5	70.1	8AI-01	4Y211-55M x
4Y8AI8-35 x		2-3/16	35														4Y211-35 x
4Y8AI8-36 x		2-1/4	36														4Y211-36 x
4Y8AJ8-36 x		2-1/4	36	4.331	6.81	5.63	4	1.97	0.99	1 1/4 - 11 1/2 NPSM	1	1.56	1	2.55	3.03	8AJ	4Y212-36 x
4Y8AJ8-60M x	60			110	173.0	143.0	101.6	50.0	25.0	1 1/2 - 6 UNC	25.4	39.6	25.4	64.6	77.0	8AJ-01	4Y212-60M x
4Y8AJ8-39 x		2-7/16	39														4Y212-39 x
4Y8AK8-39 x		2-7/16	39	4.921	7.88	6.5	4.63	2.47	1.24	1 1/2 - 11 1/2 NPSM	1.25	1.75	1.19	2.99	3.43	8AK	4Y214-39 x
4Y8AK8-40 x		2-1/2	40	125	200.2	165.1	117.6	62.7	31.4		31.8	44.5	30.2	75.8	87.1		4Y214-40 x
4Y8AK8-70M x	70																4Y214-70M x
4Y8AK8-44 x		2-3/4	44														4Y214-44 x
4Y8AL8-40 x				5.128	7.88	6.5	4.63	2.47	1.24	1 1/2 - 11 1/2 NPSM	1.25	1.75	1.31	2.99	3.6	8AL	4Y215-40
4Y8AL8-43 x		2-11/16	43	130	200.2	165.1	117.6	62.7	31.4		31.8	44.5	33.3	75.8	91.4		4Y215-43 x
4Y8AL8-44 x		2-3/4	44														4Y215-44 x
4Y8AL8-45 x		2-13/16	45														4Y215-45 x
4Y8AL8-47 x		2-15/16	47														4Y215-47 x
4Y8AL8-75M x	75																4Y215-75M x
4Y8L8-48 x		3	48														4Y215-48 x

X indicates a 2-letter designation for lube & seals
G = food grade grease — **X** = standard configuration
F = food grade EPL — **O** = open (no seal or flinger)
Other alpha - refer to page 3 — **Others** - refer to page 3
Example: GX = food grade grease with standard seals & flingers

Stainless Ball Solution® Three-Bolt Flange

CLASSIC or VALUE

Set screw locking stainless ball bearing Series "4Y"
Standard three-bolt pattern Series "3"
Stainless housing Series "A"

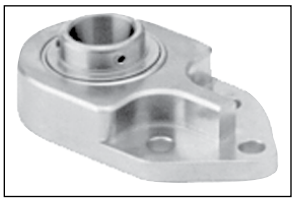

More Sizes / Styles
Inserts pgs F-5 to F-9
Eccentric inserts in SS or KG: pgs F-10 to F-34
QuiKlean® eccentric: pgs F-34 to F-47
Set screw inserts in SS or KG: pgs F-48 to F-72
QuiKlean® set screw: pgs F-72 to F-85

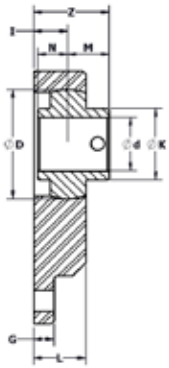

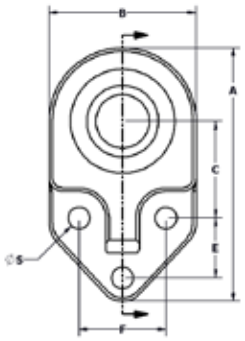

Stainless Housing

"x" indicates a 2-letter designation referring to lube & seals

MOUNTED BEARING PART NUMBER	d			Sphere OD size									Bolt size	Brg c/l to front	Brg c/l to back	Overall LTB of brg (I+M)	Brg collar size	Housing PN	Ball bearing PN
	mm	in	16th	D	A	B	C	E	F	G	L	I	S	M	N	Z	K		SETSCREW
4Y3AA8-12M x	12			1.575	3.5	2	1.38	0.81	1.25	0.25	0.85	0.53	5/16"	0.61	0.41	1.14	0.97	3AA	4Y203-12M x
4Y3AA8-08 x		1/2	8	40	88.9	50.8	35.1	20.6	31.8	6.4	21.6	13.5		15.5	10.4	29.0	24.6		4Y203-08 x
4Y3AA8-09 x		9/16	9																4Y203-09 x
4Y3AA8-15M x	15																		4Y203-15M x
4Y3AA8-10 x		5/8	10																4Y203-10 x
4Y3AA8-17M x	17																		4Y203-17M x
4Y3AB8-12M x	12			1.850	4.25	2.5	1.69	0.88	1.5	0.31	0.95	0.59	3/8"	0.72	0.5	1.31	1.14	3AB	4Y204-12M x
4Y3AB8-08 x		1/2	8	47	108.0	63.5	42.9	22.4	38.1	7.9	24.1	15.0		18.3	12.7	33.3	29.0		4Y204-08 x
4Y3AB8-15M x	15																		4Y204-15M x
4Y3AB8-10 x		5/8	10																4Y204-10 x
4Y3AB8-17M x	17																		4Y204-17M x
4Y3AB8-11 x		11/16	11																4Y204-11 x
4Y3AB8-12 x		3/4	12																4Y204-12 x
4Y3AB8-20M x	20																		4Y204-20M x
4Y3AC8-12 x		3/4	12	2.047	4.75	2.75	1.81	1.13	1.63	0.38	0.97	0.64	3/8"	0.78	0.56	1.42	1.34	3AC	4Y205-12 x
4Y3AC8-14 x		7/8	14	52	120.7	69.9	46.0	28.7	41.4	9.7	24.6	16.3		19.8	14.2	36.1	34.0		4Y205-14 x
4Y3AC8-15 x		15/16	15																4Y205-15 x
4Y3AC8-25M x	25																		4Y205-25M x
4Y3AC8-16 x		1	16																4Y205-16 x
4Y3AD8-16 x		1	16	2.441	5.38	3.12	2.06	1.25	1.88	0.38	1.07	0.66	3/8"	0.87	0.63	1.53	1.59	3AD	4Y206-16 x
4Y3AD8-17 x		1-1/16	17	62	136.7	79.2	52.3	31.8	47.8	9.7	27.2	16.8		22.1	16.0	38.9	40.4		4Y206-17 x
4Y3AD8-18 x		1-1/8	18																4Y206-18 x
4Y3AD8-30M x	30																		4Y206-30M x
4Y3AD8-19 x		1-3/16	19																4Y206-19 x
4Y3AD8-20 x		1-1/4	20																4Y206-20 x
4Y3AE8-19 x		1-3/16	19	2.835	6	3.63	2.38	1.25	2	0.5	1.22	0.79	1/2"	1	0.69	1.79	1.84	3AE	4Y207-19 x
4Y3AE8-20 x		1-1/4	20	72	152.4	92.2	60.5	31.8	50.8	12.7	31.0	20.1		25.4	17.5	45.5	46.7		4Y207-20 x
4Y3AE8-21 x		1-5/16	21																4Y207-21 x
4Y3AE8-22 x		1-3/8	22																4Y207-22 x
4Y3AE8-35M x	35																		4Y207-35M x
4Y3AE8-23 x		1-7/16	23																4Y207-23 x
4Y3AF8-23 x		1-7/16	23	3.150	6.5	4	2.56	1.38	2.25	0.5	1.24	0.77	1/2"	1.19	0.75	1.96	2.08	3AF	4Y208-23 x
4Y3AF8-24 x		1-1/2	24	80	165.1	101.6	65.0	35.1	57.2	12.7	31.5	19.6		30.2	19.1	49.8	52.8		4Y208-24 x
4Y3AF8-40M x	40																		4Y208-40M x
4Y3AG8-24 x		1-1/2	24	3.346	6.94	4.25	2.75	1.5	2.5	0.5	1.24	0.76	1/2"	1.19	0.75	1.95	2.31	3AG	4Y209-24 x
4Y3AG8-26 x		1-5/8	26	85	176.3	108.0	69.9	38.1	63.5	12.7	31.5	19.3		30.2	19.1	49.5	58.7		4Y209-26 x
4Y3AG8-27 x		1-11/16	27																4Y209-27 x
4Y3AG8-28 x		1-3/4	28																4Y209-28 x
4Y3AG8-45M x	45																		4Y209-45M x
4Y3AH8-28 x		1-3/4	28	3.543	7.41	4.56	2.94	1.63	2.75	0.5	1.24	0.77	1/2"	1.28	0.75	2.05	2.45	3AH	4Y210-28 x
4Y3AH8-30 x		1-7/8	30	90	188.2	115.8	74.7	41.4	69.9	12.7	31.5	19.6		32.5	19.1	52.1	62.2		4Y210-30 x
4Y3AH8-31 x		1-15/16	31																4Y210-31 x
4Y3AH8-50M x	50																		4Y210-50M x
4Y3AH8-32 x		2	32																4Y210-32 x
4Y3AI8-32 x		2	32	3.937	8.04	4.95	3.13	1.75	3	0.63	1.47	0.92	5/8"	1.32	0.87	2.24	2.76	3AI	4Y211-32 x
4Y3AI8-55M x	55			100	204.2	125.7	79.5	44.5	76.2	16.0	37.3	23.4		33.5	22.1	56.9	70.1		4Y211-55M x
4Y3AI8-35 x		2-3/16	35																4Y211-35 x
4Y3AI8-36 x		2-1/4	36																4Y211-36 x
4Y3AJ8-36 x		2-1/4	36	4.331	8.88	5.63	3.38	2	3.5	0.63	1.66	1.07	5/8"	1.56	1	2.63	3.03	3AJ	4Y212-36 x
4Y3AJ8-60M x	60			110	225.6	143.0	85.9	50.8	88.9	16.0	42.2	27.2		39.6	25.4	66.8	77.0		4Y212-60M x
4Y3AJ8-39 x		2-7/16	39																4Y212-39 x
4Y3AK8-39 x		2-7/16	39	4.921	10.03	6.44	3.75	2.38	4.25	0.63	1.86	1.25	5/8"	1.75	1.19	3.00	3.43	3AK	4Y214-39 x
4Y3AK8-40 x		2-1/2	40	125	254.8	163.6	95.3	60.5	108.0	16.0	47.2	31.8		44.5	30.2	76.2	87.1		4Y214-40 x
4Y3AK8-70M x	70																		4Y214-70M x
4Y3AK8-44 x		2-3/4	44																4Y214-44 x
4Y3AL8-40 x				5.128	10.69	6.5	4	2.63	4.25	0.75	1.98	1.39	3/4"	1.75	1.31	3.14	3.6	3AL	4Y215-40
4Y3AL8-43 x		2-11/16	43	130	271.5	165.1	101.6	66.8	108.0	19.1	50.3	35.3		44.5	33.3	79.8	91.4		4Y215-43 x
4Y3AL8-44 x		2-3/4	44																4Y215-44 x
4Y3AL8-45 x		2-13/16	45																4Y215-45 x
4Y3AL8-47 x		2-15/16	47																4Y215-47 x
4Y3AL8-75M x	75																		4Y215-75M x
4Y3AL8-48 x		3	48																4Y215-48 x

X indicates a 2-letter designation for lube & seals
G = food grade grease
F = food grade EPL
Other alpha - refer to page 3
X = standard configuration
O = open (no seal or flinger)
Others - refer to page 3
Example: GX = food grade grease with standard seals & flingers

Stainless Ball Solution® Three-Bolt Flange

CLASSIC or VALUE

Set screw locking stainless ball bearing Series "4Y"
Standard three-bolt pattern Series "3"
Polymer housing Series "G"



More Sizes / Styles
Inserts pgs F-5 to F-9
Eccentric inserts in SS or KG: pgs F-10 to F-34
QuiKlean® eccentric: pgs F-34 to F-47
Set screw inserts in SS or KG: pgs F-48 to F-72
QuiKlean® set screw: pgs F-72 to F-85

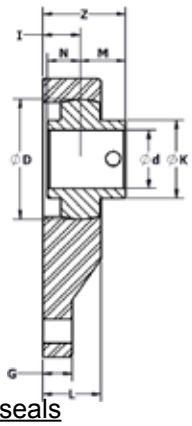

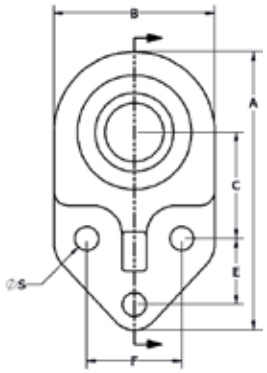

"x" indicates a 2-letter designation referring to lube & seals

Polymer Housing

MOUNTED BEARING PART NUMBER	d			Sphere OD size									Bolt size	Brg c/l to front	Brg c/l to back	Overall LTB of brg (I+M)	Brg collar size	Housing PN	Ball baring PN
	mm	in	16th	D	A	B	C	E	F	G	L	I	S	M	N	Z	K		SETSCREW
4Y3GA8-12M x	12			1.575	3.66	2.19	1.38	0.81	1.25	0.44	0.85	0.53	5/16"	0.61	0.41	1.14	0.97	3GA	4Y203-12M x
4Y3GA8-08 x		1/2	8	40	93.0	55.6	35.1	20.6	31.8	11.2	21.6	13.5		15.5	10.4	29.0	24.6		4Y203-08 x
4Y3GA8-09 x		9/16	9																4Y203-09 x
4Y3GA8-15M x	15																		4Y203-15M x
4Y3GA8-10 x		5/8	10																4Y203-10 x
4Y3GA8-17M x	17																		4Y203-17M x
4Y3GB8-12M x	12			1.850	4.34	2.56	1.68	0.88	1.5	0.44	0.95	0.59	3/8"	0.72	0.5	1.31	1.14	3GB	4Y204-12M x
4Y3GB8-08 x		1/2	8	47	110.2	65.0	42.7	22.4	38.1	11.2	24.1	15.0		18.3	12.7	33.3	29.0		4Y204-08 x
4Y3GB8-15M x	15																		4Y204-15M x
4Y3GB8-10 x		5/8	10																4Y204-10 x
4Y3GB8-17M x	17																		4Y204-17M x
4Y3GB8-11 x		11/16	11																4Y204-11 x
4Y3GB8-12 x		3/4	12																4Y204-12 x
4Y3GB8-20M x	20																		4Y204-20M x
4Y3GC8-12 x		3/4	12	2.047	4.75	2.75	1.81	1.12	1.63	0.5	0.99	0.64	3/8"	0.78	0.56	1.42	1.34	3GC	4Y205-12 x
4Y3GC8-14 x		7/8	14	52	120.7	69.9	46.0	28.4	41.4	12.7	25.1	16.3		19.8	14.2	36.1	34.0		4Y205-14 x
4Y3GC8-15 x		15/16	15																4Y205-15 x
4Y3GC8-25M x	25																		4Y205-25M x
4Y3GC8-16 x		1	16																4Y205-16 x
4Y3GD8-16 x		1	16	2.441	5.44	3.25	2.06	1.25	1.88	0.5	1.07	0.66	3/8"	0.87	0.63	1.53	1.59	3GD	4Y206-16 x
4Y3GD8-17 x		1-1/16	17	62	138.2	82.6	52.3	31.8	47.8	12.7	27.2	16.8		22.1	16.0	38.9	40.4		4Y206-17 x
4Y3GD8-18 x		1-1/8	18																4Y206-18 x
4Y3GD8-30M x	30																		4Y206-30M x
4Y3GD8-19 x		1-3/16	19																4Y206-19 x
4Y3GD8-20 x		1-1/4	20																4Y206-20 x
4Y3GE8-19 x		1-3/16	19	2.835	6.19	3.81	2.38	1.25	2	0.56	1.22	0.79	1/2"	1	0.69	1.79	1.84	3GE	4Y207-19 x
4Y3GE8-20 x		1-1/4	20	72	157.2	96.8	60.5	31.8	50.8	14.2	31.0	20.1		25.4	17.5	45.5	46.7		4Y207-20 x
4Y3GE8-21 x		1-5/16	21																4Y207-21 x
4Y3GE8-22 x		1-3/8	22																4Y207-22 x
4Y3GE8-35M x	35																		4Y207-35M x
4Y3GE8-23 x		1-7/16	23																4Y207-23 x
4Y3GF8-23 x		1-7/16	23	3.150	6.72	4.25	2.56	1.38	2.25	0.56	1.24	0.77	1/2"	1.19	0.75	1.96	2.08	3GF	4Y208-23 x
4Y3GF8-24 x		1-1/2	24	80	170.7	108.0	65.0	35.1	57.2	14.2	31.5	19.6		30.2	19.1	49.8	52.8		4Y208-24 x
4Y3GF8-40M x	40																		4Y208-40M x
4Y3GG8-24 x		1-1/2	24	3.346	7.19	4.56	2.75	1.5	2.5	0.63	1.24	0.76	1/2"	1.19	0.75	1.95	2.31	3GG	4Y209-24 x
4Y3GG8-26 x		1-5/8	26	85	182.6	115.8	69.9	38.1	63.5	16.0	31.5	19.3		30.2	19.1	49.5	58.7		4Y209-26 x
4Y3GG8-27 x		1-11/16	27																4Y209-27 x
4Y3GG8-28 x		1-3/4	28																4Y209-28 x
4Y3GG8-45M x	45																		4Y209-45M x
4Y3GH8-28 x		1-3/4	28	3.543	7.63	4.88	2.94	1.63	2.75	0.63	1.24	0.77	1/2"	1.28	0.75	2.05	2.45	3GH	4Y210-28 x
4Y3GH8-30 x		1-7/8	30	90	193.8	124.0	74.7	41.4	69.9	16.0	31.5	19.6		32.5	19.1	52.1	62.2		4Y210-30 x
4Y3GH8-31 x		1-15/16	31																4Y210-31 x
4Y3GH8-50M x	50																		4Y210-50M x
4Y3GH8-32 x		2	32																4Y210-32 x
4Y3GI8-32 x		2	32	3.937	8.38	5.38	3.12	1.75	3	0.69	1.47	0.92	5/8"	1.32	0.87	2.24	2.76	3GI	4Y211-32 x
4Y3GI8-55M x	55			100	212.9	136.7	79.2	44.5	76.2	17.5	37.3	23.4		33.5	22.1	56.9	70.1		4Y211-55M x
4Y3GI8-35 x		2-3/16	35																4Y211-35 x
4Y3GI8-36 x		2-1/4	36																4Y211-36 x
4Y3GJ8-36 x		2-1/4	36	4.331	9.19	6	3.38	2	3.5	0.69	1.66	1.07	5/8"	1.56	1	2.63	3.03	3GJ	4Y212-36 x
4Y3GJ8-60M x	60			110	233.4	152.4	85.9	50.8	88.9	17.5	42.2	27.2		39.6	25.4	66.8	77.0		4Y212-60M x
4Y3GJ8-39 x		2-7/16	39																4Y212-39 x
4Y3GK8-39 x		2-7/16	39	4.921	10.38	6.88	3.75	2.38	4.25	0.75	1.86	1.25	5/8"	1.75	1.19	3.00	3.43	3GK	4Y214-39 x
4Y3GK8-40 x		2-1/2	40	125	263.7	174.8	95.3	60.5	108.0	19.1	47.2	31.8		44.5	30.2	76.2	87.1		4Y214-40 x
4Y3GK8-70M x	70																		4Y214-70M x
4Y3GK8-44 x		2-3/4	44																4Y214-44 x
4Y3GL8-40 x				5.128	11.13	7.13	4	2.63	4.25	1	1.98	1.39	5/8	1.75	1.31	3.14	3.6	3GL	4Y215-40
4Y3GL8-43 x		2-11/16	43	130	282.7	181.1	101.6	66.8	108.0	25.4	50.3	35.3		44.5	33.3	79.8	91.4		4Y215-43 x
4Y3GL8-44 x		2-3/4	44																4Y215-44 x
4Y3GL8-45 x		2-13/16	45																4Y215-45 x
4Y3GL8-47 x		2-15/16	47																4Y215-47 x
4Y3GL8-75M x	75																		4Y215-75M x
4Y3GL8-48 x		3	48																4Y215-48 x

X indicates a 2-letter designation for lube & seals

G = food grade grease
F = food grade EPL
Other alpha - refer to page 3
X = standard configuration
O = open (no seal or flinger)
Others - refer to page 3

Example: GX = food grade grease with standard seals & flingers

Stainless Ball Solution®
Round Three-Bolt Flange

CLASSIC or VALUE

Set screw locking stainless ball bearing Series “4Y”
Round three-bolt pattern Series “22”
Stainless housing Series “A”



More Sizes / Styles
Inserts pgs F-5 to F-9
Eccentric inserts in SS or KG: pgs F-10 to F-34
QuiKlean® eccentric: pgs F-34 to F-47
Set screw inserts in SS or KG: pgs F-48 to F-72
QuiKlean® set screw: pgs F-72 to F-85

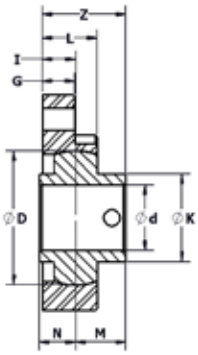

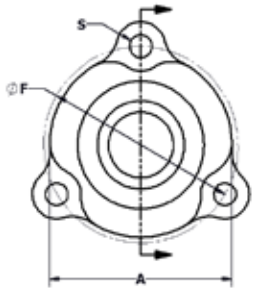

Stainless Housing

“x” indicates a 2-letter designation referring to lube & seals

MOUNTED BEARING PART NUMBER	d			Sphere OD size					Sph depth	Bolt size	Brg c/l to front	Brg c/l to back	Overall LTB of brg (I+M)	Brg collar size		Ball bearing PN
	mm	in	16th	D	A	F	G	L	I	S	M	N	Z	K	Housing PN	SETSCREW
4Y22AA8-12M x	12			1.575	2.4	2.5	0.38	0.69	0.43	1/4	0.61	0.41	1.04	0.97	22AA	4Y203-12M x
4Y22AA8-08 x		1/2	8	40	61.0	63.5	9.5	17.5	10.9		15.5	10.4	26.4	24.6		4Y203-08 x
4Y22AA8-09 x		9/16	9													4Y203-09 x
4Y22AA8-15M x	15															4Y203-15M x
4Y22AA8-10 x		5/8	10													4Y203-10 x
4Y22AA8-17M x	17															4Y203-17M x
4Y22AA-018-12M x	12			1.575	2.4	2.39	0.38	0.69	0.43	1/4	0.61	0.41	1.04	0.97	22AA-01	4Y203-12M x
4Y22AA-018-08 x		1/2	8	40	61.0	60.7	9.5	17.5	10.9		15.5	10.4	26.4	24.6		4Y203-08 x
4Y22AA-018-09 x		9/16	9													4Y203-09 x
4Y22AA-018-15M x	15															4Y203-15M x
4Y22AA-018-10 x		5/8	10													4Y203-10 x
4Y22AA-018-17M x	17															4Y203-17M x
4Y22AB8-12M x	12			1.850	2.5	2.81	0.42	0.78	0.43	5/16	0.72	0.5	1.15	1.14	22AB	4Y204-12M x
4Y22AB8-08 x		1/2	8	47	63.5	71.4	10.7	19.8	10.9		18.3	12.7	29.2	29.0		4Y204-08 x
4Y22AB8-15M x	15															4Y204-15M x
4Y22AB8-10 x		5/8	10													4Y204-10 x
4Y22AB8-17M x	17															4Y204-17M x
4Y22AB8-11 x		11/16	11													4Y204-11 x
4Y22AB8-12 x		3/4	12													4Y204-12 x
4Y22AB8-20M x	20															4Y204-20M x
4Y22AC8-12 x		3/4	12	2.047	2.8	3	0.5	0.84	0.53	5/16	0.78	0.56	1.31	1.34	22AC	4Y205-12 x
4Y22AC8-14 x		7/8	14	52	71.1	76.2	12.7	21.3	13.5		19.8	14.2	33.3	34.0		4Y205-14 x
4Y22AC8-15 x		15/16	15													4Y205-15 x
4Y22AC8-25M x	25															4Y205-25M x
4Y22AC8-16 x		1	16													4Y205-16 x
4Y22AD8-16 x		1	16	2.441	3.31	3.56	0.58	0.98	0.6	3/8	0.87	0.63	1.47	1.59	22AD	4Y206-16 x
4Y22AD8-17 x		1-1/16	17	62	84.1	90.4	14.7	24.9	15.2		22.1	16.0	37.3	40.4		4Y206-17 x
4Y22AD8-18 x		1-1/8	18													4Y206-18 x
4Y22AD8-30M x	30															4Y206-30M x
4Y22AD8-19 x		1-3/16	19													4Y206-19 x
4Y22AD8-20 x		1-1/4	20													4Y206-20 x
4Y22AE8-19 x		1-3/16	19	2.835	3.69	3.94	0.66	1.12	0.7	3/8	1	0.69	1.70	1.84	22AE	4Y207-19 x
4Y22AE8-20 x		1-1/4	20	72	93.7	100.1	16.8	28.4	17.8		25.4	17.5	43.2	46.7		4Y207-20 x
4Y22AE8-21 x		1-5/16	21													4Y207-21 x
4Y22AE8-22 x		1-3/8	22													4Y207-22 x
4Y22AE8-35M x	35															4Y207-35M x
4Y22AE8-23 x		1-7/16	23													4Y207-23 x
4Y22AF8-23 x		1-7/16	23	3.150	3.69	3.94	0.66	1.12	0.7	3/8	1.19	0.75	1.89	2.08	22AF	4Y208-23 x
4Y22AF8-24 x		1-1/2	24	80	93.7	100.1	16.8	28.4	17.8		30.2	19.1	48.0	52.8		4Y208-24 x
4Y22AF8-40M x	40															4Y208-40M x
4Y22AG8-24 x		1-1/2	24	3.334	4.5	4.75	0.65	1.12	0.7	1/2	1.19	0.75	1.89	2.31	22AG	4Y209-24 x
4Y22AG8-26 x		1-5/8	26	85	114.3	120.7	16.5	28.4	17.8		30.2	19.1	48.0	58.7		4Y209-26 x
4Y22AG8-27 x		1-11/16	27													4Y209-27 x
4Y22AG8-28 x		1-3/4	28													4Y209-28 x
4Y22AG8-45M x	45															4Y209-45M x
4Y22AH8-28 x		1-3/4	28	3.543	4.5	5	0.63	1.13	0.72	1/2	1.28	0.75	2.00	2.45	22AH	4Y210-28 x
4Y22AH8-30 x		1-7/8	30	90	114.3	127.0	15.9	28.6	18.3		32.5	19.1	50.8	62.2		4Y210-30 x
4Y22AH8-31 x		1-15/16	31													4Y210-31 x
4Y22AH8-50M x	50															4Y210-50M x
4Y22AH8-32 x		2	32													4Y210-32 x

X indicates a 2-letter designation for lube & seals
G = food grade grease
F = food grade EPL
Other alpha - refer to page 3
X = standard configuration
O = open (no seal or flinger)
Others - refer to page 3
Example: GX = food grade grease with standard seals & flingers

Stainless Ball Solution®
Round Three-Bolt Flange

CLASSIC or VALUE

Set screw locking stainless ball bearing Series “4Y”
Round three-bolt pattern Series “22”
Polymer housing Series “G”

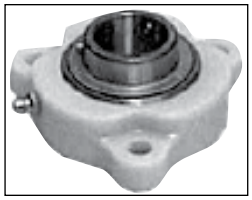

More Sizes / Styles
Inserts pgs F-5 to F-9
Eccentric inserts in SS or KG: pgs F-10 to F-34
QuiKlean® eccentric: pgs F-34 to F-47
Set screw inserts in SS or KG: pgs F-48 to F-72
QuiKlean® set screw: pgs F-72 to F-85

“x” indicates a 2-letter designation referring to lube & seals

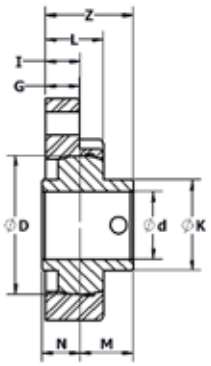

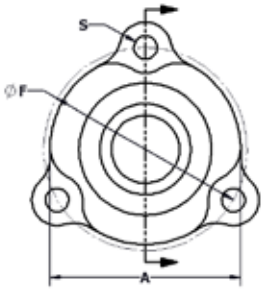

Polymer Housing

MOUNTED BEARING PART NUMBER	d			Sphere OD size					Sph depth	Bolt size	Brg c/l to front	Brg c/l to back	Overall LTB of brg (I+M)	Brg collar size	Housing PN	Ball bearing PN
	mm	in	16th	D	A	F	G	L	I	S	M	N	Z	K		SETSCREW
4Y22GA8-12M x	12			1.575	2.38	2.5	0.38	0.69	0.41	1/4	0.61	0.41	1.02	0.97	22GA	4Y203-12M x
4Y22GA8-08 x		1/2	8	40	60.5	63.5	9.5	17.5	10.4		15.5	10.4	25.9	24.6		4Y203-08 x
4Y22GA8-09 x		9/16	9													4Y203-09 x
4Y22GA8-15M x	15															4Y203-15M x
4Y22GA8-10 x		5/8	10													4Y203-10 x
4Y22GA-018-17M x	17															4Y203-17M x
4Y22GA-018-12M x	12			1.575	2.38	2.39	0.38	0.69	0.41	1/4	0.61	0.41	1.02	0.97	22GA-01	4Y203-12M x
4Y22GA-018-08 x		1/2	8	40	60.5	60.7	9.5	17.5	10.4		15.5	10.4	25.9	24.6		4Y203-08 x
4Y22GA-018-09 x		9/16	9													4Y203-09 x
4Y22GA-018-15M x	15															4Y203-15M x
4Y22GA-018-10 x		5/8	10													4Y203-10 x
4Y22GA-018-17M x	17															4Y203-17M x
4Y22GB8-12M x	12			1.850	2.5	2.81	0.42	0.78	0.43	5/16	0.72	0.5	1.15	1.14	22GB	4Y204-12M x
4Y22GB8-08 x		1/2	8	47	63.5	71.4	10.7	19.8	10.9		18.3	12.7	29.2	29.0		4Y204-08 x
4Y22GB8-15M x	15															4Y204-15M x
4Y22GB8-10 x		5/8	10													4Y204-10 x
4Y22GB8-17M x	17															4Y204-17M x
4Y22GB8-11 x		11/16	11													4Y204-11 x
4Y22GB8-12 x		3/4	12													4Y204-12 x
4Y22GB8-20M x	20															4Y204-20M x
4Y22GC8-12 x		3/4	12	2.047	2.81	3	0.5	0.84	0.51	5/16	0.78	0.56	1.29	1.34	22GC	4Y205-12 x
4Y22GC8-14 x		7/8	14	52	71.4	76.2	12.7	21.3	13.0		19.8	14.2	32.8	34.0		4Y205-14 x
4Y22GC8-15 x		15/16	15													4Y205-15 x
4Y22GC8-25M x	25															4Y205-25M x
4Y22GC8-16 x		1	16													4Y205-16 x
4Y22GD8-16 x		1	16	2.441	3.31	3.56	0.58	0.98	0.58	3/8	0.87	0.63	1.45	1.59	22GD	4Y206-16 x
4Y22GD8-17 x		1-1/16	17	62	84.1	90.4	14.7	24.9	14.7		22.1	16.0	36.8	40.4		4Y206-17 x
4Y22GD8-18 x		1-1/8	18													4Y206-18 x
4Y22GD8-30M x	30															4Y206-30M x
4Y22GD8-19 x		1-3/16	19													4Y206-19 x
4Y22GD8-20 x		1-1/4	20													4Y206-20 x
4Y22GE8-19 x		1-3/16	19	2.835	3.69	3.94	0.66	1.08	0.68	3/8	1	0.69	1.68	1.84	22GE	4Y207-19 x
4Y22GE8-20 x		1-1/4	20	72	93.7	100.1	16.8	27.4	17.3		25.4	17.5	42.7	46.7		4Y207-20 x
4Y22GE8-21 x		1-5/16	21													4Y207-21 x
4Y22GE8-22 x		1-3/8	22													4Y207-22 x
4Y22GE8-35M x	35															4Y207-35M x
4Y22GE8-23 x		1-7/16	23													4Y207-23 x

X indicates a 2-letter designation for lube & seals
G = food grade grease
F = food grade EPL
Other alpha - refer to page 3
X = standard configuration
O = open (no seal or flinger)
Others - refer to page 3
Example: GX = food grade grease with standard seals & flingers

Stainless Ball Solution® Four-Bolt Flange

CLASSIC or VALUE

Set screw locking stainless ball bearing Series "4Y"
Standard four-bolt pattern Series "4"
Stainless housing Series "A"



More Sizes / Styles
Inserts pgs F-5 to F-9
Eccentric inserts in SS or KG: pgs F-10 to F-34
QuiKlean® eccentric: pgs F-34 to F-47
Set screw inserts in SS or KG: pgs F-48 to F-72
QuiKlean® set screw: pgs F-72 to F-85

"x" indicates a 2-letter designation referring to lube & seals

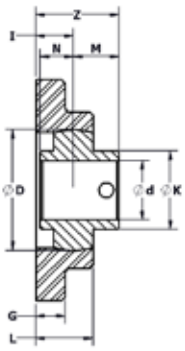

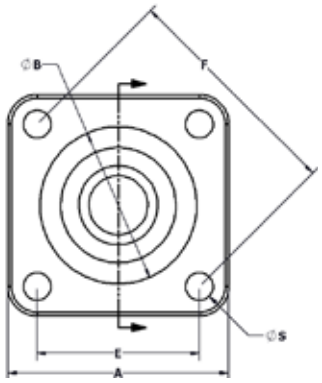

Stainless Housing

MOUNTED BEARING PART NUMBER	d mm	d in	d 16th	Sphere OD size D	A	B	E	F	G	L	I	Bolt size S	Brg c/l to front M	Brg c/l to back N	Overall LTB of brg (I+M) Z	Brg collar size K	Housing PN	Ball bearing PN SETSCREW
4Y4AA8-12M x	12			1.575	3	2.15	2.13	3.01	0.44	0.85	0.53	3/8"	0.61	0.41	1.14	0.97	4AA	4Y203-12M x
4Y4AA8-08 x		1/2	8	40	76.2	54.6	54.1	76.5	11.2	21.6	13.5		15.5	10.4	29.0	24.6		4Y203-08 x
4Y4AA8-09 x		9/16	9															4Y203-09 x
4Y4AA8-15M x	15																	4Y203-15M x
4Y4AA8-10 x		5/8	10															4Y203-10 x
4Y4AA8-17M x	17																	4Y203-17M x
4Y4AB8-12M x	12			1.850	3.38	2.42	2.5	3.54	0.44	0.95	0.59	3/8"	0.72	0.5	1.31	1.14	4AB	4Y204-12M x
4Y4AB8-08 x		1/2	8	47	85.9	61.5	63.5	89.9	11.2	24.1	15.0		18.3	12.7	33.3	29.0		4Y204-08 x
4Y4AB8-15M x	15																	4Y204-15M x
4Y4AB8-10 x		5/8	10															4Y204-10 x
4Y4AB8-17M x	17																	4Y204-17M x
4Y4AB8-11 x		11/16	11															4Y204-11 x
4Y4AB8-12 x		3/4	12															4Y204-12 x
4Y4AB8-20M x	20																	4Y204-20M x
4Y4AC8-12 x		3/4	12	2.047	3.75	2.66	2.75	3.89	0.5	0.97	0.64	7/16"	0.78	0.56	1.42	1.34	4AC	4Y205-12 x
4Y4AC8-14 x		7/8	14	52	95.3	67.6	69.9	98.8	12.7	24.6	16.3		19.8	14.2	36.1	34.0		4Y205-14 x
4Y4AC8-15 x		15/16	15															4Y205-15 x
4Y4AC8-25M x	25																	4Y205-25M x
4Y4AC8-16 x		1	16															4Y205-16 x
4Y4AD8-16 x		1	16	2.441	4.25	3.13	3.25	4.6	0.5	1.07	0.66	7/16"	0.87	0.63	1.53	1.59	4AD	4Y206-16 x
4Y4AD8-17 x		1-1/16	17	62	108.0	79.5	82.6	116.8	12.7	27.2	16.8		22.1	16.0	38.9	40.4		4Y206-17 x
4Y4AD8-18 x		1-1/8	18															4Y206-18 x
4Y4AD8-30M x	30																	4Y206-30M x
4Y4AD8-19 x		1-3/16	19															4Y206-19 x
4Y4AD8-20 x		1-1/4	20															4Y206-20 x
4Y4AE8-19 x		1-3/16	19	2.835	4.75	3.63	3.63	5.13	0.56	1.22	0.79	1/2"	1	0.69	1.79	1.84	4AE	4Y207-19 x
4Y4AE8-20 x		1-1/4	20	72	120.7	92.2	92.2	130.3	14.2	31.0	20.1		25.4	17.5	45.5	46.7		4Y207-20 x
4Y4AE8-21 x		1-5/16	21															4Y207-21 x
4Y4AE8-22 x		1-3/8	22															4Y207-22 x
4Y4AE8-35M x	35																	4Y207-35M x
4Y4AE8-23 x		1-7/16	23															4Y207-23 x
4Y4AF8-23 x		1-7/16	23	3.150	5.13	4	4	5.66	0.56	1.24	0.77	1/2"	1.19	0.75	1.96	2.08	4AF	4Y208-23 x
4Y4AF8-24 x		1-1/2	24	80	130.3	101.6	101.6	143.8	14.2	31.5	19.6		30.2	19.1	49.8	52.8		4Y208-24 x
4Y4AF8-40M x	40																	4Y208-40M x
4Y4AG8-24 x		1-1/2	24	3.346	5.25	4.25	4.13	5.83	0.63	1.24	0.76	1/2"	1.19	0.75	1.95	2.31	4AG	4Y209-24 x
4Y4AG8-26 x		1-5/8	26	85	133.4	108.0	104.9	148.1	16.0	31.5	19.3		30.2	19.1	49.5	58.7		4Y209-26 x
4Y4AG8-27 x		1-11/16	27															4Y209-27 x
4Y4AG8-28 x		1-3/4	28															4Y209-28 x
4Y4AG8-45M x	45																	4Y209-45M x
4Y4AH8-28 x		1-3/4	28	3.543	5.5	4.56	4.38	6.19	0.63	1.24	0.77	1/2"	1.28	0.75	2.05	2.45	4AH	4Y210-28 x
4Y4AH8-30 x		1-7/8	30	90	139.7	115.8	111.3	157.2	16.0	31.5	19.6		32.5	19.1	52.1	62.2		4Y210-30 x
4Y4AH8-31 x		1-15/16	31															4Y210-31 x
4Y4AH8-50M x	50																	4Y210-50M x
4Y4AH8-32 x		2	32															4Y210-32 x
4Y4AI8-32 x		2	32	3.937	6.5	5.06	5.13	7.25	0.69	1.47	0.92	5/8"	1.32	0.87	2.24	2.76	4AI	4Y211-32 x
4Y4AI8-55M x	55			100	165.1	128.5	130.3	184.2	17.5	37.3	23.4		33.5	22.1	56.9	70.1		4Y211-55M x
4Y4AI8-35 x		2-3/16	35															4Y211-35 x
4Y4AI8-36 x		2-1/4	36															4Y211-36 x
4Y4AJ8-36 x		2-1/4	36	4.331	7	5.63	5.63	7.96	0.69	1.66	1.07	5/8"	1.56	1	2.63	3.03	4AJ	4Y212-36 x
4Y4AJ8-60M x	60			110	177.8	143.0	143.0	202.2	17.5	42.2	27.2		39.6	25.4	66.8	77.0		4Y212-60M x
4Y4AJ8-39 x		2-7/16	39															4Y212-39 x
4Y4AK8-39 x		2-7/16	39	4.921	7.25	6.44	5.88	8.31	0.75	1.86	1.25	5/8"	1.75	1.19	3.00	3.43	4AK	4Y214-39 x
4Y4AK8-40 x		2-1/2	40	125	184.2	163.6	149.4	211.1	19.1	47.2	31.8		44.5	30.2	76.2	87.1		4Y214-40 x
4Y4AK8-70M x	70																	4Y214-70M x
4Y4AK8-44 x		2-3/4	44															4Y214-44 x
4Y4AL8-40 x				5.128	7.62	6.5	6	8.49	1	1.98	1.39	3/4"	1.75	1.31	3.14	3.6	4AL	4Y215-40 x
4Y4AL8-43 x		2-11/16	43	130	193.5	165.1	152.4	215.6	25.4	50.3	35.3		44.5	33.3	79.8	91.4		4Y215-43 x
4Y4AL8-44 x		2-3/4	44															4Y215-44 x
4Y4AL8-45 x		2-13/16	45															4Y215-45 x
4Y4AL8-47 x		2-15/16	47															4Y215-47 x
4Y4AL8-75M x	75																	4Y215-75M x
4Y4AL8-48 x		3	48															4Y215-48 x

X indicates a 2-letter designation for lube & seals
G = food grade grease
F = food grade EPL
Other alpha - refer to page 3
X = standard configuration
O = open (no seal or flinger)
Others - refer to page 3
Example: GX = food grade grease with standard seals & flingers

Stainless Ball Solution®
Four-Bolt Flange

CLASSIC or VALUE

Set screw locking stainless ball bearing Series "4Y"
Standard four-bolt pattern Series "4"
Polymer housing Series "G"

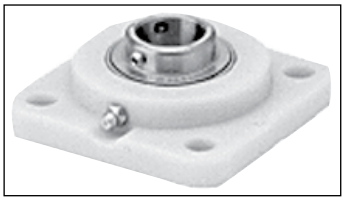

More Sizes / Styles
Inserts pgs F-5 to F-9
Eccentric inserts in SS or KG: pgs F-10 to F-34
QuiKlean® eccentric: pgs F-34 to F-47
Set screw inserts in SS or KG: pgs F-48 to F-72
QuiKlean® set screw: pgs F-72 to F-85

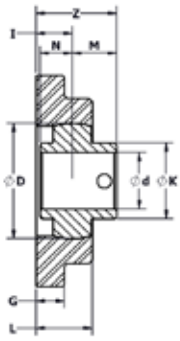

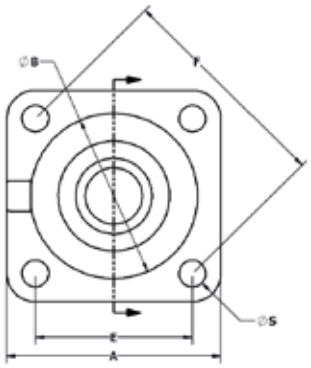

Polymer Housing

"x" indicates a 2-letter designation referring to lube & seals

MOUNTED BEARING PART NUMBER	d			Sphere OD size								Bolt size	Brg c/l to front	Brg c/l to back	Overall LTB of brg (I+M)	Brg collar size	Housing PN	Ball bearing PN
	mm	in	16th	D	A	B	E	F	G	L	I	S	M	N	Z	K	PN	SETSCREW
4Y4GA8-12M x	12			1.575	3	2.15	2.13	3.01	0.44	0.85	0.53	3/8"	0.61	0.41	1.14	0.97	4GA	4Y203-12M x
4Y4GA8-08 x		1/2	8	40	76.2	54.6	54.1	76.5	11.2	21.6	13.5		15.5	10.4	29.0	24.6		4Y203-08 x
4Y4GA8-09 x		9/16	9															4Y203-09 x
4Y4GA8-15M x	15																	4Y203-15M x
4Y4GA8-10 x		5/8	10															4Y203-10 x
4Y4GA8-17M x	17																	4Y203-17M x
4Y4GB8-12M x	12			1.850	3.38	2.69	2.5	3.54	0.44	0.95	0.59	3/8"	0.72	0.5	1.31	1.14	4GB	4Y204-12M x
4Y4GB8-08 x		1/2	8	47	85.9	68.3	63.5	89.9	11.2	24.1	15.0		18.3	12.7	33.3	29.0		4Y204-08 x
4Y4GB8-15M x	15																	4Y204-15M x
4Y4GB8-10 x		5/8	10															4Y204-10 x
4Y4GB8-17M x	17																	4Y204-17M x
4Y4GB8-11 x		11/16	11															4Y204-11 x
4Y4GB8-12 x		3/4	12															4Y204-12 x
4Y4GB8-20M x	20																	4Y204-20M x
4Y4GC8-12 x		3/4	12	2.047	3.75	2.93	2.75	3.89	0.5	0.99	0.64	7/16"	0.78	0.56	1.42	1.34	4GC	4Y205-12 x
4Y4GC8-14 x		7/8	14	52	95.3	74.4	69.9	98.8	12.7	25.1	16.3		19.8	14.2	36.1	34.0		4Y205-14 x
4Y4GC8-15 x		15/16	15															4Y205-15 x
4Y4GC8-25M x	25																	4Y205-25M x
4Y4GC8-16 x		1	16															4Y205-16 x
4Y4GD8-16 x		1	16	2.441	4.25	3.63	3.25	4.6	0.5	1.07	0.66	7/16"	0.87	0.63	1.53	1.59	4GD	4Y206-16 x
4Y4GD8-17 x		1-1/16	17	62	108.0	92.2	82.6	116.8	12.7	27.2	16.8		22.1	16.0	38.9	40.4		4Y206-17 x
4Y4GD8-18 x		1-1/8	18															4Y206-18 x
4Y4GD8-30M x	30																	4Y206-30M x
4Y4GD8-19 x		1-3/16	19															4Y206-19 x
4Y4GD8-20 x		1-1/4	20															4Y206-20 x
4Y4GE8-19 x		1-3/16	19	2.835	4.75	4	3.63	5.13	0.56	1.22	0.79	1/2"	1	0.69	1.79	1.84	4GE	4Y207-19 x
4Y4GE8-20 x		1-1/4	20	72	120.7	101.6	92.2	130.3	14.2	31.0	20.1		25.4	17.5	45.5	46.7		4Y207-20 x
4Y4GE8-21 x		1-5/16	21															4Y207-21 x
4Y4GE8-22 x		1-3/8	22															4Y207-22 x
4Y4GE8-35M x	35																	4Y207-35M x
4Y4GE8-23 x		1-7/16	23															4Y207-23 x
4Y4GF8-23 x		1-7/16	23	3.150	5.13	4.56	4	5.66	0.56	1.24	0.77	1/2"	1.19	0.75	1.96	2.08	4GF	4Y208-23 x
4Y4GF8-24 x		1-1/2	24	80	130.3	115.8	101.6	143.8	14.2	31.5	19.6		30.2	19.1	49.8	52.8		4Y208-24 x
4Y4GF8-40M x	40																	4Y208-40M x
4Y4GG8-24 x		1-1/2	24	3.346	5.25	4.74	4.13	5.83	0.63	1.24	0.76	1/2"	1.19	0.75	1.95	2.31	4GG	4Y209-24 x
4Y4GG8-26 x		1-5/8	26	85	133.4	120.4	104.9	148.1	16.0	31.5	19.3		30.2	19.1	49.5	58.7		4Y209-26 x
4Y4GG8-27 x		1-11/16	27															4Y209-27 x
4Y4GG8-28 x		1-3/4	28															4Y209-28 x
4Y4GG8-45M x	45																	4Y209-45M x
4Y4GH8-28 x		1-3/4	28	3.543	5.5	5.06	4.38	6.19	0.63	1.24	0.77	1/2"	1.28	0.75	2.05	2.45	4GH	4Y210-28 x
4Y4GH8-30 x		1-7/8	30	90	139.7	128.5	111.3	157.2	16.0	31.5	19.6		32.5	19.1	52.1	62.2		4Y210-30 x
4Y4GH8-31 x		1-15/16	31															4Y210-31 x
4Y4GH8-50M x	50																	4Y210-50M x
4Y4GH8-32 x		2	32															4Y210-32 x
4Y4GI8-32 x		2	32	3.937	6.5	5.88	5.13	7.25	0.69	1.47	0.92	5/8"	1.32	0.87	2.24	2.76	4GI	4Y211-32 x
4Y4GI8-55M x	55			100	165.1	149.4	130.3	184.2	17.5	37.3	23.4		33.5	22.1	56.9	70.1		4Y211-55M x
4Y4GI8-35 x		2-3/16	35															4Y211-35 x
4Y4GI8-36 x		2-1/4	36															4Y211-36 x
4Y4GJ8-36 x		2-1/4	36	4.331	7	6.56	5.62	7.96	0.69	1.66	1.07	5/8"	1.56	1	2.63	3.03	4GJ	4Y212-36 x
4Y4GJ8-60M x	60			110	177.8	166.6	142.7	202.2	17.5	42.2	27.2		39.6	25.4	66.8	77.0		4Y212-60M x
4Y4GJ8-39 x		2-7/16	39															4Y212-39 x
4Y4GK8-39 x		2-7/16	39	4.921	6.94	6.44	5.87	8.31	0.75	1.86	1.25	5/8"	1.75	1.19	3.00	3.43	4GK	4Y214-39 x
4Y4GK8-40 x		2-1/2	40	125	176.3	163.6	149.1	211.1	19.1	47.2	31.8		44.5	30.2	76.2	87.1		4Y214-40 x
4Y4GK8-70M x	70																	4Y214-70M x
4Y4GK8-44 x		2-3/4	44															4Y214-44 x
4Y4GL8-40 x				5.128	7.63	6.94	6	8.49	1	1.98	1.39	3/4"	1.75	1.31	3.14	3.6	4GL	4Y215-40
4Y4GL8-43 x		2-11/16	43	130	193.8	176.3	152.4	215.6	25.4	50.3	35.3		44.5	33.3	79.8	91.4		4Y215-43 x
4Y4GL8-44 x		2-3/4	44															4Y215-44 x
4Y4GL8-45 x		2-13/16	45															4Y215-45 x
4Y4GL8-47 x		2-15/16	47															4Y215-47 x
4Y4GL8-75M x	75																	4Y215-75M x
4Y4GL8-48 x		3	48															4Y215-48 x

X indicates a 2-letter designation for lube & seals

G = food grade grease
F = food grade EPL
Other alpha - refer to page 3
X = standard configuration
O = open (no seal or flinger)
Others - refer to page 3

Example: GX = food grade grease with standard seals & flingers

Stainless Ball Solution®
Take Up Bearing, Narrow

CLASSIC or VALUE

Set screw locking stainless ball bearing Series "4Y"
Take up bearing pattern Series "5"
Stainless housing Series "A"

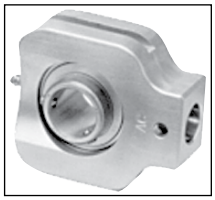

More Sizes / Styles
Inserts pgs F-5 to F-9
Eccentric inserts in SS or KG: pgs F-10 to F-34
QuiKlean® eccentric: pgs F-34 to F-47
Set screw inserts in SS or KG: pgs F-48 to F-72
QuiKlean® set screw: pgs F-72 to F-85

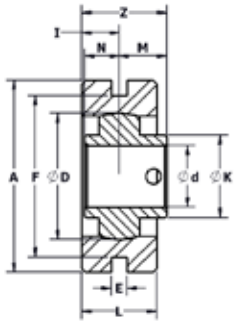

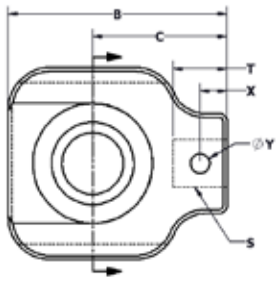

Stainless Housing

"x" indicates a 2-letter designation referring to lube & seals

MOUNTED BEARING PART NUMBER	d			Sphere OD size							Sph. depth	Hole size				Brg c/l to front	Brg c/l to back	Overall LTB of brg (I+M)	Brg collar size	Housing PN	Ball bearing PN
	mm	in	16th	D	A	B	C	E	F	L	I	S	T	X	Y	M	N	Z	K		SETSCREW
4Y5AA8-12M x	12			1.575	2.5	2.69	1.69	0.26	2	0.88	0.44	17/32	0.63	0.31	0.25	0.61	0.41	1.05	0.97	5AA	4Y203-12M x
4Y5AA8-08 x		1/2	8	40	63.5	68.3	42.9		50.8	22.4	11.2		16.0	7.9		15.5	10.4	26.7	24.6		4Y203-08 x
4Y5AA8-09 x		9/16	9																		4Y203-09 x
4Y5AA8-15M x	15																				4Y203-15M x
4Y5AA8-10 x		5/8	10																		4Y203-10 x
4Y5AA8-17M x	17																				4Y203-17M x
4Y5AB8-12M x	12			1.850	3.13	3.44	2.19	0.26	2.63	1.22	0.61	25/32	0.88	0.44	0.31	0.72	0.5	1.33	1.14	5AB	4Y204-12M x
4Y5AB8-08 x		1/2	8	47	79.5	87.4	55.6		66.8	31.0	15.5		22.4	11.2		18.3	12.7	33.8	29.0		4Y204-08 x
4Y5AB8-15M x	15																				4Y204-15M x
4Y5AB8-10 x		5/8	10																		4Y204-10 x
4Y5AB8-17M x	17																				4Y204-17M x
4Y5AB8-11 x		11/16	11																		4Y204-11 x
4Y5AB8-12 x		3/4	12																		4Y204-12 x
4Y5AB8-20M x	20																				4Y204-20M x
4Y5AC8-12 x		3/4	12	2.047	3.13	3.56	2.19	0.26	2.63	1.22	0.61	25/32	0.88	0.44	0.31	0.78	0.56	1.39	1.34	5AC	4Y205-12 x
4Y5AC8-14 x		7/8	14	52	79.5	90.4	55.6		66.8	31.0	15.5		22.4	11.2		19.8	14.2	35.3	34.0		4Y205-14 x
4Y5AC8-15 x		15/16	15																		4Y205-15 x
4Y5AC8-25M x	25																				4Y205-25M x
4Y5AC8-16 x		1	16																		4Y205-16 x
4Y5AD8-16 x		1	16	2.441	4.13	4.31	2.69	0.26	3.5	1.22	0.61	25/32	1	0.5	0.31	0.87	0.63	1.48	1.59	5AD	4Y206-16 x
4Y5AD8-17 x		1-1/16	17	62	104.9	109.5	68.3		88.9	31.0	15.5		25.4	12.7		22.1	16.0	37.6	40.4		4Y206-17 x
4Y5AD8-18 x		1-1/8	18																		4Y206-18 x
4Y5AD8-30M x	30																				4Y206-30M x
4Y5AD8-19 x		1-3/16	19																		4Y206-19 x
4Y5AD8-20 x		1-1/4	20																		4Y206-20 x
4Y5AE8-19 x		1-3/16	19	2.835	4.13	4.5	2.69	0.26	3.5	1.22	0.61	25/32	1	0.5	0.31	1	0.69	1.61	1.84	5AE	4Y207-19 x
4Y5AE8-20 x		1-1/4	20	72	104.9	114.3	68.3		88.9	31.0	15.5		25.4	12.7		25.4	17.5	40.9	46.7		4Y207-20 x
4Y5AE8-21 x		1-5/16	21																		4Y207-21 x
4Y5AE8-22 x		1-3/8	22																		4Y207-22 x
4Y5AE8-35M x	35																				4Y207-35M x
4Y5AE8-23 x		1-7/16	23																		4Y207-23 x
4Y5AF8-23 x		1-7/16	23	3.150	4.75	5.38	3.25	0.32	4	1.47	0.74	29/32	1.16	0.66	0.38	1.19	0.75	1.93	2.08	5AF	4Y208-23 x
4Y5AF8-24 x		1-1/2	24	80	120.7	136.7	82.6		101.6	37.3	18.7		29.5	16.8		30.2	19.1	48.9	52.8		4Y208-24 x
4Y5AF8-40M x	40																				4Y208-40M x
4Y5AG8-24 x		1-1/2	24	3.346	4.75	5.44	3.25	0.32	4	1.47	0.74	29/32	1.16	0.66	0.38	1.19	0.75	1.93	2.31	5AG	4Y209-24 x
4Y5AG8-26 x		1-5/8	26	85	120.7	138.2	82.6		101.6	37.3	18.7		29.5	16.8		30.2	19.1	48.9	58.7		4Y209-26 x
4Y5AG8-27 x		1-11/16	27																		4Y209-27 x
4Y5AG8-28 x		1-3/4	28																		4Y209-28 x
4Y5AG8-45M x	45																				4Y209-45M x
4Y5AH8-28 x		1-3/4	28	3.543	4.75	5.5	3.25	0.32	4	1.47	0.74	29/32	1.16	0.66	0.38	1.28	0.75	2.02	2.45	5AH	4Y210-28 x
4Y5AH8-30 x		1-7/8	30	90	120.7	139.7	82.6		101.6	37.3	18.7		29.5	16.8		32.5	19.1	51.2	62.2		4Y210-30 x
4Y5AH8-31 x		1-15/16	31																		4Y210-31 x
4Y5AH8-50M x	50																				4Y210-50M x
4Y5AH8-32 x		2	32																		4Y210-32 x
4Y5AI8-32 x		2	32	3.937	5.38	6.13	3.63	0.32	4.44	1.72	0.86	1-1/32	1.28	0.69	0.44	1.32	0.87	2.18	2.76	5AI	4Y211-32 x
4Y5AI8-55M x	55			100	136.7	155.7	92.2		112.8	43.7	21.8		32.5	17.5		33.5	22.1	55.4	70.1		4Y211-55M x
4Y5AI8-35 x		2-3/16	35																		4Y211-35 x
4Y5AI8-36 x		2-1/4	36																		4Y211-36 x
4Y5AJ8-36 x		2-1/4	36	4.331	5.75	6.69	3.88	0.32	4.94	1.72	0.86	1-1/32	1.28	0.69	0.44	1.56	1	2.42	3.03	5AJ	4Y212-36 x
4Y5AJ8-60M x	60			110	146.1	169.9	98.6		125.5	43.7	21.8		32.5	17.5		39.6	25.4	61.5	77.0		4Y212-60M x
4Y5AJ8-39 x		2-7/16	39																		4Y212-39 x
4Y5AK8-39 x		2-7/16	39	4.921	6.38	7.38	4.31	0.38	5.5	1.88	0.94	1-9/32	1.5	0.75	0.5	1.75	1.19	2.69	3.43	5AK	4Y214-39 x
4Y5AK8-40 x		2-1/2	40	125	162.1	187.5	109.5		139.7	47.8	23.9		38.1	19.1		44.5	30.2	68.3	87.1		4Y214-40 x
4Y5AK8-70M x	70																				4Y214-70M x
4Y5AK8-44 x		2-3/4	44																		4Y214-44 x
4Y5AL8-40 x				5.128	6.75	7.69	4.44	0.38	5.88	1.88	0.94	1-9/32	1.5	0.75	0.5	1.75	1.31	2.69	3.6	5AL	4Y215-40
4Y5AL8-43 x		2-11/16	43	130	171.5	195.3	112.8		149.4	47.8	23.9		38.1	19.1		44.5	33.3	68.3	91.4		4Y215-43 x
4Y5AL8-44 x		2-3/4	44																		4Y215-44 x
4Y5AL8-45 x		2-13/16	45																		4Y215-45 x
4Y5AL8-47 x		2-15/16	47																		4Y215-47 x
4Y5AL8-75M x	75																				4Y215-75M x
4Y5L8-48 x		3	48																		4Y215-48 x

X indicates a 2-letter designation for lube & seals
G = food grade grease
F = food grade EPL
Other alpha - refer to page 3
X = standard configuration
O = open (no seal or flinger)
Others - refer to page 3
Example: GX = food grade grease with standard seals & flingers

Stainless Ball Solution®
Take Up Bearing, Narrow

CLASSIC or VALUE

Set screw locking stainless ball bearing Series “4Y”
Take up bearing pattern Series “5”
Polymer housing Series “G”



More Sizes / Styles
Inserts pgs F-5 to F-9
Eccentric inserts in SS or KG: pgs F-10 to F-34
QuiKlean® eccentric: pgs F-34 to F-47
Set screw inserts in SS or KG: pgs F-48 to F-72
QuiKlean® set screw: pgs F-72 to F-85

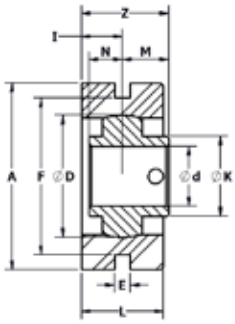

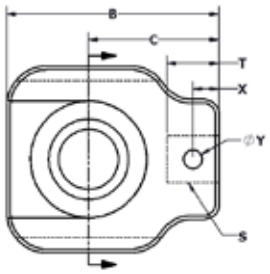

Polymer Housing

“x” indicates a 2-letter designation referring to lube & seals

MOUNTED BEARING PART NUMBER	d			Sphere OD size							Sph. depth	Hole size				Brg c/l to front	Brg c/l to back	Overall LTB of brg (I+M)	Brg collar size	Housing PN	Ball bearing PN
	mm	in	16th	D	A	B	C	E	F	L	I	S	T	X	Y	M	N	Z	K		SETSCREW
4Y5GA8-12M x	12			1.575	2.5	2.69	1.69	0.26	2	1	0.5	17/32	0.63	0.31	0.25	0.61	0.41	1.11	0.97	5GA	4Y203-12M x
4Y5GA8-08 x		1/2	8	40	63.5	68.3	42.9		50.8	25.4	12.7		16.0	7.9		15.5	10.4	28.2	24.6		4Y203-08 x
4Y5GA8-09 x		9/16	9																		4Y203-09 x
4Y5GA8-15M x	15																				4Y203-15M x
4Y5GA8-10 x		5/8	10																		4Y203-10 x
4Y5GA8-17M x	17																				4Y203-17M x
4Y5GB8-12M x	12			1.850	3.13	3.44	2.19	0.26	2.63	1.38	0.69	25/32	0.88	0.44	0.31	0.72	0.5	1.41	1.14	5GB	4Y204-12M x
4Y5GB8-08 x		1/2	8	47	79.5	87.4	55.6		66.8	34.9	17.5		22.4	11.2		18.3	12.7	35.8	29.0		4Y204-08 x
4Y5GB8-15M x	15																				4Y204-15M x
4Y5GB8-10 x		5/8	10																		4Y204-10 x
4Y5GB8-17M x	17																				4Y204-17M x
4Y5GB8-11 x		11/16	11																		4Y204-11 x
4Y5GB8-12 x		3/4	12																		4Y204-12 x
4Y5GB8-20M x	20																				4Y204-20M x
4Y5GC8-12 x		3/4	12	2.047	3.13	3.56	2.19	0.26	2.63	1.38	0.69	25/32	0.88	0.44	0.31	0.78	0.56	1.47	1.34	5GC	4Y205-12 x
4Y5GC8-14 x		7/8	14	52	79.5	90.4	55.6		66.8	34.9	17.5		22.4	11.2		19.8	14.2	37.3	34.0		4Y205-14 x
4Y5GC8-15 x		15/16	15																		4Y205-15 x
4Y5GC8-25M x	25																				4Y205-25M x
4Y5GC8-16 x		1	16																		4Y205-16 x
4Y5GD8-16 x		1	16	2.441	4.13	4.31	2.69	0.26	3.5	1.38	0.69	25/32	1	0.5	0.31	0.87	0.63	1.56	1.59	5GD	4Y206-16 x
4Y5GD8-17 x		1-1/16	17	62	104.9	109.5	68.3		88.9	34.9	17.5		25.4	12.7		22.1	16.0	39.6	40.4		4Y206-17 x
4Y5GD8-18 x		1-1/8	18																		4Y206-18 x
4Y5GD8-30M x	30																				4Y206-30M x
4Y5GD8-19 x		1-3/16	19																		4Y206-19 x
4Y5GD8-20 x		1-1/4	20																		4Y206-20 x
4Y5GE8-19 x		1-3/16	19	2.835	4.13	4.5	2.69	0.26	3.5	1.38	0.69	25/32	1	0.5	0.31	1	0.69	1.69	1.84	5GE	4Y207-19 x
4Y5GE8-20 x		1-1/4	20	72	104.9	114.3	68.3		88.9	34.9	17.5		25.4	12.7		25.4	17.5	42.9	46.7		4Y207-20 x
4Y5GE8-21 x		1-5/16	21																		4Y207-21 x
4Y5GE8-22 x		1-3/8	22																		4Y207-22 x
4Y5GE8-35M x	35																				4Y207-35M x
4Y5GE8-23 x		1-7/16	23																		4Y207-23 x
4Y5GF8-23 x		1-7/16	23	3.150	4.75	5.38	3.25	0.32	4	1.63	0.81	29/32	1.16	0.66	0.38	1.19	0.75	2.00	2.08	5GF	4Y208-23 x
4Y5GF8-24 x		1-1/2	24	80	120.7	136.7	82.6		101.6	41.3	20.6		29.5	16.8		30.2	19.1	50.9	52.8		4Y208-24 x
4Y5GF8-40M x	40																				4Y208-40M x
4Y5GG8-24 x		1-1/2	24	3.346	4.75	5.44	3.25	0.32	4	1.63	0.81	29/32	1.16	0.66	0.38	1.19	0.75	2.00	2.31	5GG	4Y209-24 x
4Y5GG8-26 x		1-5/8	26	85	120.7	138.2	82.6		101.6	41.3	20.6		29.5	16.8		30.2	19.1	50.9	58.7		4Y209-26 x
4Y5GG8-27 x		1-11/16	27																		4Y209-27 x
4Y5GG8-28 x		1-3/4	28																		4Y209-28 x
4Y5GG8-45M x	45																				4Y209-45M x
4Y5GH8-28 x		1-3/4	28	3.543	4.75	5.5	3.25	0.32	4	1.63	0.81	29/32	1.16	0.66	0.38	1.28	0.75	2.09	2.45	5GH	4Y210-28 x
4Y5GH8-30 x		1-7/8	30	90	120.7	139.7	82.6		101.6	41.3	20.6		29.5	16.8		32.5	19.1	53.1	62.2		4Y210-30 x
4Y5GH8-31 x		1-15/16	31																		4Y210-31 x
4Y5GH8-50M x	50																				4Y210-50M x
4Y5GH8-32 x		2	32																		4Y210-32 x
4Y5GI8-32 x		2	32	3.937	5.38	6.13	3.63	0.32	4.44	1.75	0.88	1-1/32	1.28	0.69	0.44	1.32	0.87	2.20	2.76	5GI	4Y211-32 x
4Y5GI8-55M x	55			100	136.7	155.7	92.2		112.8	44.5	22.2		32.5	17.5		33.5	22.1	55.8	70.1		4Y211-55M x
4Y5GI8-35 x		2-3/16	35																		4Y211-35 x
4Y5GI8-36 x		2-1/4	36																		4Y211-36 x
4Y5GJ8-36 x		2-1/4	36	4.331	5.75	6.69	3.88	0.32	4.94	1.75	0.88	1-1/32	1.28	0.69	0.44	1.56	1	2.44	3.03	5GJ	4Y212-36 x
4Y5GJ8-60M x	60			110	146.1	169.9	98.6		125.5	44.5	22.2		32.5	17.5		39.6	25.4	61.8	77.0		4Y212-60M x
4Y5GJ8-39 x		2-7/16	39																		4Y212-39 x
4Y5GK8-39 x		2-7/16	39	4.921	6.38	7.38	4.31	0.38	5.5	2	1.00	1-9/32	1.5	0.75	0.5	1.75	1.19	2.75	3.43	5GK	4Y214-39 x
4Y5GK8-40 x		2-1/2	40	125	162.1	187.5	109.5		139.7	50.8	25.4		38.1	19.1		44.5	30.2	69.9	87.1		4Y214-40 x
4Y5GK8-70M x	70																				4Y214-70M x
4Y5GK8-44 x		2-3/4	44																		4Y214-44 x
4Y5GL8-40 x				5.128	6.75	7.69	4.44	0.38	5.88	2	1.00	1-9/32	1.5	0.75	0.5	1.75	1.31	2.75	3.6	5GL	4Y215-40
4Y5GL8-43 x		2-11/16	43	130	171.5	195.3	112.8		149.4	50.8	25.4		38.1	19.1		44.5	33.3	69.9	91.4		4Y215-43 x
4Y5GL8-44 x		2-3/4	44																		4Y215-44 x
4Y5GL8-45 x		2-13/16	45																		4Y215-45 x
4Y5GL8-47 x		2-15/16	47																		4Y215-47 x
4Y5GL8-75M x	75																				4Y215-75M x
4Y5G8-48 x		3	48																		4Y215-48 x

X indicates a 2-letter designation for lube & seals
G = food grade grease
F = food grade EPL
Other alpha - refer to page 3
X = standard configuration
O = open (no seal or flinger)
Others - refer to page 3
Example: GX = food grade grease with standard seals & flingers

Stainless Ball Solution®
Take Up Bearing, Wide

CLASSIC or VALUE

Set screw locking stainless ball bearing Series "4Y"
Take up bearing pattern Series "7"
Stainless housing Series "A"



More Sizes / Styles
Inserts pgs F-5 to F-9
Eccentric inserts in SS or KG: pgs F-10 to F-34
QuiKlean® eccentric: pgs F-34 to F-47
Set screw inserts in SS or KG: pgs F-48 to F-72
QuiKlean® set screw: pgs F-72 to F-85

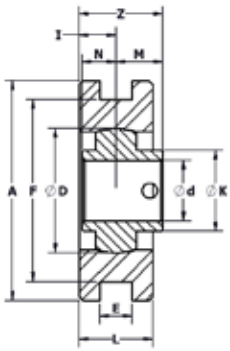

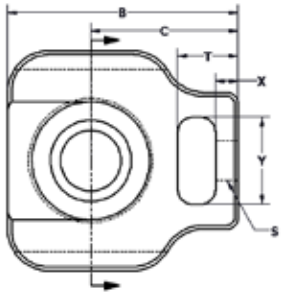

Stainless Housing

"x" indicates a 2-letter designation referring to lube & seals

MOUNTED BEARING PART NUMBER	d			Sphere OD size								Hole size				Brg c/l to front	Brg c/l to back	Overall LTB of brg (I+M)	Brg collar size	Housing PN	Ball bearing PN
	mm	in	16th	D	A	B	C	E	F	L	I	S	T	X	Y	M	N	Z	K		SETSCREW
4Y7AA8-12M x	12			1.575	3	3.13	2	0.42	2.5	0.97	0.49	17/32	0.81	0.31	1.25	0.61	0.41	1.10	0.97	7AA	4Y203-12M x
4Y7AA8-08 x		1/2	8	40	76.2	79.5	50.8	10.7	63.5	24.6	12.3		20.6	7.9	31.8	15.5	10.4	27.8	24.6		4Y203-08 x
4Y7AA8-09 x		9/16	9																		4Y203-09 x
4Y7AA8-15M x	15																				4Y203-15M x
4Y7AA8-10 x		5/8	10																		4Y203-10 x
4Y7AA8-17M x	17																				4Y203-17M x
4Y7AB8-12M x	12			1.850	3.63	3.69	2.38	0.54	3	1.22	0.61	21/32	1	0.38	1.44	0.72	0.5	1.33	1.14	7AB	4Y204-12M x
4Y7AB8-08 x		1/2	8	47	92.2	93.7	60.5	13.7	76.2	31.0	15.5		25.4	9.7	36.6	18.3	12.7	33.8	29.0		4Y204-08 x
4Y7AB8-15M x	15																				4Y204-15M x
4Y7AB8-10 x		5/8	10																		4Y204-10 x
4Y7AB8-17M x	17																				4Y204-17M x
4Y7AB8-11 x		11/16	11																		4Y204-11 x
4Y7AB8-12 x		3/4	12																		4Y204-12 x
4Y7AB8-20M x	20																				4Y204-20M x
4Y7AC8-12 x		3/4	12	2.047	3.63	3.81	2.44	0.54	3	1.22	0.61	21/32	1	0.38	1.44	0.78	0.56	1.39	1.34	7AC	4Y205-12 x
4Y7AC8-14 x		7/8	14	52	92.2	96.8	62.0	13.7	76.2	31.0	15.5		25.4	9.7	36.6	19.8	14.2	35.3	34.0		4Y205-14 x
4Y7AC8-15 x		15/16	15																		4Y205-15 x
4Y7AC8-25M x	25																				4Y205-25M x
4Y7AC8-16 x		1	16																		4Y205-16 x
4Y7AD8-16 x		1	16	2.441	4.13	4.38	2.75	0.54	3.5	1.47	0.74	25/32	1.16	0.38	1.63	0.87	0.63	1.61	1.59	7AD	4Y206-16 x
4Y7AD8-17 x		1-1/16	17	62	104.9	111.3	69.9	13.7	88.9	37.3	18.7		29.5	9.7	41.4	22.1	16.0	40.8	40.4		4Y206-17 x
4Y7AD8-18 x		1-1/8	18																		4Y206-18 x
4Y7AD8-30M x	30																				4Y206-30M x
4Y7AD8-19 x		1-3/16	19																		4Y206-19 x
4Y7AD8-20 x		1-1/4	20																		4Y206-20 x
4Y7AE8-19 x		1-3/16	19	2.835	4.13	4.81	3	0.54	3.5	1.47	0.74	25/32	1.16	0.38	1.63	1	0.69	1.74	1.84	7AE	4Y207-19 x
4Y7AE8-20 x		1-1/4	20	72	104.9	122.2	76.2	13.7	88.9	37.3	18.7		29.5	9.7	41.4	25.4	17.5	44.1	46.7		4Y207-20 x
4Y7AE8-21 x		1-5/16	21																		4Y207-21 x
4Y7AE8-22 x		1-3/8	22																		4Y207-22 x
4Y7AE8-35M x	35																				4Y207-35M x
4Y7AE8-23 x		1-7/16	23																		4Y207-23 x
4Y7AF8-23 x		1-7/16	23	3.150	4.5	5.5	3.44	0.7	4	1.88	0.94	1-1/16	1.5	0.56	1.94	1.19	0.75	2.13	2.08	7AF	4Y208-23 x
4Y7AF8-24 x		1-1/2	24	80	114.3	139.7	87.4	17.8	101.6	47.8	23.9		38.1	14.2	49.3	30.2	19.1	54.1	52.8		4Y208-24 x
4Y7AF8-40M x	40																				4Y208-40M x
4Y7AG8-24 x		1-1/2	24	3.346	4.63	5.69	3.5	0.7	4	1.88	0.94	1-1/16	1.5	0.56	1.94	1.19	0.75	2.13	2.31	7AG	4Y209-24 x
4Y7AG8-26 x		1-5/8	26	85	117.6	144.5	88.9	17.8	101.6	47.8	23.9		38.1	14.2	49.3	30.2	19.1	54.1	58.7		4Y209-26 x
4Y7AG8-27 x		1-11/16	27																		4Y209-27 x
4Y7AG8-28 x		1-3/4	28																		4Y209-28 x
4Y7AG8-45M x	45																				4Y209-45M x
4Y7AH8-28 x		1-3/4	28	3.543	4.75	5.81	3.56	0.7	4	1.88	0.94	1-1/16	1.5	0.56	1.94	1.28	0.75	2.22	2.45	7AH	4Y210-28 x
4Y7AH8-30 x		1-7/8	30	90	120.7	147.6	90.4	17.8	101.6	47.8	23.9		38.1	14.2	49.3	32.5	19.1	56.4	62.2		4Y210-30 x
4Y7AH8-31 x		1-15/16	31																		4Y210-31 x
4Y7AH8-50M x	50																				4Y210-50M x
4Y7AH8-32 x		2	32																		4Y210-32 x
4Y7AI8-32 x		2	32	3.937	5.88	7	4.5	1.07	5.13	1.97	0.99	1-5/16	1.97	0.72	2.5	1.32	0.87	2.31	2.76	7AI	4Y211-32 x
4Y7AI8-55M x	55			100	149.4	177.8	114.3	27.2	130.3	50.0	25.0		50.0	18.3	63.5	33.5	22.1	58.5	70.1		4Y211-55M x
4Y7AI8-35 x		2-3/16	35																		4Y211-35 x
4Y7AI8-36 x		2-1/4	36																		4Y211-36 x
4Y7AJ8-36 x		2-1/4	36	4.331	5.88	7.5	4.69	1.07	5.13	1.97	0.99	1-5/16	1.97	0.72	2.5	1.56	1	2.55	3.03	7AJ	4Y212-36 x
4Y7AJ8-60M x	60			110	149.4	190.5	119.1	27.2	130.3	50.0	25.0		50.0	18.3	63.5	39.6	25.4	64.6	77.0		4Y212-60M x
4Y7AJ8-39 x		2-7/16	39																		4Y212-39 x
4Y7AK8-39 x		2-7/16	39	4.921	6.69	8.88	5.38	1.07	5.94	1.97	0.99	1-9/16	2.31	0.81	2.88	1.75	1.19	2.74	3.43	7AK	4Y214-39 x
4Y7AK8-40 x		2-1/2	40	125	169.9	225.6	136.7	27.2	150.9	50.0	25.0		58.7	20.6	73.2	44.5	30.2	69.5	87.1		4Y214-40 x
4Y7AK8-70M x	70																				4Y214-70M x
4Y7AK8-44 x		2-3/4	44																		4Y214-44 x
4Y7AL8-40 x				5.128	6.69	9.13	5.5	1.07	5.94	1.97	0.99	1-9/16	2.31	0.81	2.88	1.75	1.31	2.74	3.6	7AL	4Y215-40
4Y7AL8-43 x		2-11/16	43	130	169.9	231.9	139.7	27.2	150.9	50.0	25.0		58.7	20.6	73.2	44.5	33.3	69.5	91.4		4Y215-43 x
4Y7AL8-44 x		2-3/4	44																		4Y215-44 x
4Y7AL8-45 x		2-13/16	45																		4Y215-45 x
4Y7AL8-47 x		2-15/16	47																		4Y215-47 x
4Y7AL8-75M x	75																				4Y215-75M x
4Y7AL8-48 x		3	48																		4Y215-48 x

X indicates a 2-letter designation for lube & seals
G = food grade grease
F = food grade EPL
Other alpha - refer to page 3
X = standard configuration
O = open (no seal or flinger)
Others - refer to page 3
Example: GX = food grade grease with standard seals & flingers

Stainless Ball Solution®
Take Up Bearing, Wide

CLASSIC or VALUE

Set screw locking stainless ball bearing Series “4Y”
Take up bearing pattern Series “7”
Polymer housing Series “G”



More Sizes / Styles
Inserts pgs F-5 to F-9
Eccentric inserts in SS or KG: pgs F-10 to F-34
QuiKlean® eccentric: pgs F-34 to F-47
Set screw inserts in SS or KG: pgs F-48 to F-72
QuiKlean® set screw: pgs F-72 to F-85

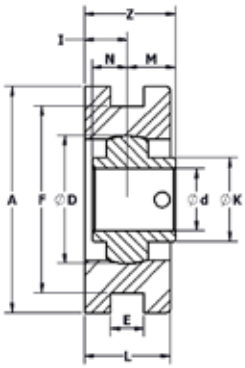

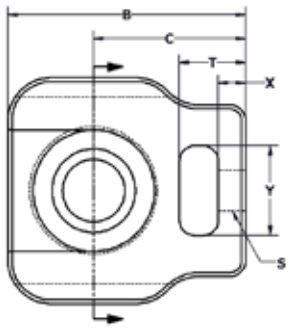

Polymer Housing

“x” indicates a 2-letter designation referring to lube & seals

MOUNTED BEARING PART NUMBER	d			Sphere OD size								Hole size				Brg c/l to front	Brg c/l to back	Overall LTB of brg (I+M)	Brg collar size	Housing PN	Ball bearing PN
	mm	in	16th	D	A	B	C	E	F	L	I	S	T	X	Y	M	N	Z	K		SETSCREW
4Y7GA8-12M x	12			1.58	3	3.13	2	0.42	2.5	1.13	0.56	17/32	0.88	0.38	1.25	0.61	0.41	1.17	0.97	7GA	4Y203-12M x
4Y7GA8-08 x		1/2	8	40.1	76.2	79.5	50.8	10.7	63.5	28.6	14.3		22.4	9.7	31.8	15.5	10.4	29.8	24.6		4Y203-08 x
4Y7GA8-09 x		9/16	9																		4Y203-09 x
4Y7GA8-15M x	15																				4Y203-15M x
4Y7GA8-10 x		5/8	10																		4Y203-10 x
4Y7GA8-17M x	17																				4Y203-17M x
4Y7GB8-12M x	12			1.84	3.63	3.69	2.38	0.54	3	1.38	0.69	21/32	1.06	0.44	1.44	0.72	0.5	1.41	1.14	7GB	4Y204-12M x
4Y7GB8-08 x		1/2	8	46.7	92.2	93.7	60.5	13.7	76.2	35.1	17.5		26.9	11.2	36.6	18.3	12.7	35.8	29.0		4Y204-08 x
4Y7GB8-15M x	15																				4Y204-15M x
4Y7GB8-10 x		5/8	10																		4Y204-10 x
4Y7GB8-17M x	17																				4Y204-17M x
4Y7GB8-11 x		11/16	11																		4Y204-11 x
4Y7GB8-12 x		3/4	12																		4Y204-12 x
4Y7GB8-20M x	20																				4Y204-20M x
4Y7GC8-12 x		3/4	12	2.05	3.63	3.81	2.44	0.54	3	1.38	0.69	21/32	1.06	0.44	1.44	0.78	0.56	1.47	1.34	7GC	4Y205-12 x
4Y7GC8-14 x		7/8	14	52.1	92.2	96.8	62.0	13.7	76.2	35.1	17.5		26.9	11.2	36.6	19.8	14.2	37.3	34.0		4Y205-14 x
4Y7GC8-15 x		15/16	15																		4Y205-15 x
4Y7GC8-25M x	25																				4Y205-25M x
4Y7GC8-16 x		1	16																		4Y205-16 x
4Y7GD8-16 x		1	16	2.44	4.13	4.38	2.75	0.54	3.5	1.63	0.81	25/32	1.22	0.44	1.63	0.87	0.63	1.68	1.59	7GD	4Y206-16 x
4Y7GD8-17 x		1-1/16	17	62.0	104.9	111.3	69.9	13.7	88.9	41.3	20.6		31.0	11.2	41.4	22.1	16.0	42.7	40.4		4Y206-17 x
4Y7GD8-18 x		1-1/8	18																		4Y206-18 x
4Y7GD8-30M x	30																				4Y206-30M x
4Y7GD8-19 x		1-3/16	19																		4Y206-19 x
4Y7GD8-20 x		1-1/4	20																		4Y206-20 x
4Y7GE8-19 x		1-3/16	19	2.83	4.13	4.81	3	0.54	3.5	1.63	0.81	25/32	1.22	0.44	1.63	1	0.69	1.81	1.84	7GE	4Y207-19 x
4Y7GE8-20 x		1-1/4	20	71.9	104.9	122.2	76.2	13.7	88.9	41.3	20.6		31.0	11.2	41.4	25.4	17.5	46.0	46.7		4Y207-20 x
4Y7GE8-21 x		1-5/16	21																		4Y207-21 x
4Y7GE8-22 x		1-3/8	22																		4Y207-22 x
4Y7GE8-35M x	35																				4Y207-35M x
4Y7GE8-23 x		1-7/16	23																		4Y207-23 x
4Y7GF8-23 x		1-7/16	23	3.16	4.5	5.5	3.44	0.69	4	1.88	0.94	1-1/16	1.5	0.56	1.94	1.19	0.75	2.13	2.08	7GF	4Y208-23 x
4Y7GF8-24 x		1-1/2	24	80.3	114.3	139.7	87.4	17.5	101.6	47.8	23.9		38.1	14.2	49.3	30.2	19.1	54.1	52.8		4Y208-24 x
4Y7GF8-40M x	40																				4Y208-40M x
4Y7GG8-24 x		1-1/2	24	3.34	4.63	5.69	3.5	0.7	4	1.88	0.94	1-1/16	1.5	0.56	1.94	1.19	0.75	2.13	2.31	7GG	4Y209-24 x
4Y7GG8-26 x		1-5/8	26	84.8	117.6	144.5	88.9	17.8	101.6	47.8	23.9		38.1	14.2	49.3	30.2	19.1	54.1	58.7		4Y209-26 x
4Y7GG8-27 x		1-11/16	27																		4Y209-27 x
4Y7GG8-28 x		1-3/4	28																		4Y209-28 x
4Y7GG8-45M x	45																				4Y209-45M x
4Y7GH8-28 x		1-3/4	28	3.55	4.75	5.81	3.56	0.7	4	1.88	0.94	1-1/16	1.5	0.56	1.94	1.28	0.75	2.22	2.45	7GH	4Y210-28 x
4Y7GH8-30 x		1-7/8	30	90.2	120.7	147.6	90.4	17.8	101.6	47.8	23.9		38.1	14.2	49.3	32.5	19.1	56.4	62.2		4Y210-30 x
4Y7GH8-31 x		1-15/16	31																		4Y210-31 x
4Y7GH8-50M x	50																				4Y210-50M x
4Y7GH8-32 x		2	32																		4Y210-32 x
4Y7GI8-32 x		2	32	3.94	5.88	7.5	4.69	1.07	5.13	2.5	1.25	1-5/16	1.97	0.72	2.5	1.32	0.87	2.57	2.76	7GI	4Y211-32 x
4Y7GI8-55M x	55			100.1	149.4	190.5	119.1	27.2	130.3	63.5	31.8		50.0	18.3	63.5	33.5	22.1	65.3	70.1		4Y211-55M x
4Y7GI8-35 x		2-3/16	35																		4Y211-35 x
4Y7GI8-36 x		2-1/4	36																		4Y211-36 x
4Y7GJ8-36 x		2-1/4	36	4.33	5.88	7.5	4.69	1.07	5.13	2.5	1.25	1-5/16	1.97	0.72	2.5	1.56	1	2.81	3.03	7GJ	4Y212-36 x
4Y7GJ8-60M x	60			110.0	149.4	190.5	119.1	27.2	130.3	63.5	31.8		50.0	18.3	63.5	39.6	25.4	71.4	77.0		4Y212-60M x
4Y7GJ8-39 x		2-7/16	39																		4Y212-39 x
4Y7GK8-39 x		2-7/16	39	4.92	6.69	8.88	5.38	1.07	5.94	2.75	1.38	1-9/16	2.31	0.81	2.88	1.75	1.19	3.13	3.43	7GK	4Y214-39 x
4Y7GK8-40 x		2-1/2	40	125.0	169.9	225.6	136.7	27.2	150.9	69.9	34.9		58.7	20.6	73.2	44.5	30.2	79.4	87.1		4Y214-40 x
4Y7GK8-70M x	70																				4Y214-70M x
4Y7GK8-44 x		2-3/4	44																		4Y214-44 x
4Y7GL8-40 x				5.11	6.69	9.13	5.5	1.07	5.94	2.75	1.38	1-9/16	2.31	0.81	2.88	1.75	1.31	3.13	3.6	7GL	4Y215-40
4Y7GL8-43 x		2-11/16	43	129.8	169.9	231.9	139.7	27.2	150.9	69.9	34.9		58.7	20.6	73.2	44.5	33.3	79.4	91.4		4Y215-43 x
4Y7GL8-44 x		2-3/4	44																		4Y215-44 x
4Y7GL8-45 x		2-13/16	45																		4Y215-45 x
4Y7GL8-47 x		2-15/16	47																		4Y215-47 x
4Y7GL8-75M x	75																				4Y215-75M x
4Y7GL8-48 x		3	48																		4Y215-48 x

X indicates a 2-letter designation for lube & seals
G = food grade grease
F = food grade EPL
Other alpha - refer to page 3
X = standard configuration
O = open (no seal or flinger)
Others - refer to page 3
Example: GX = food grade grease with standard seals & flingers

Stainless Ball Solution® Piloted Flange Bearing

CLASSIC or VALUE

Set screw locking stainless ball bearing Series "4Y"
Piloted flange pattern Series "24"
Stainless housing Series "A"



More Sizes / Styles
Inserts pgs F-5 to F-9
Eccentric inserts in SS or KG: pgs F-10 to F-34
QuiKlean® eccentric: pgs F-34 to F-47
Set screw inserts in SS or KG: pgs F-48 to F-72
QuiKlean® set screw: pgs F-72 to F-85

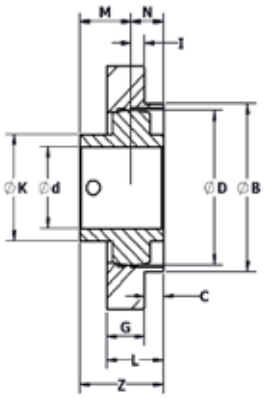

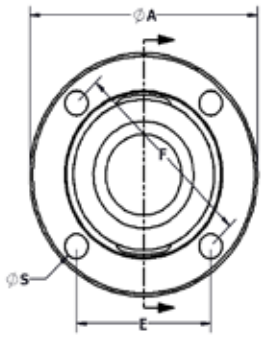

Stainless Housing

"x" indicates a 2-letter designation referring to lube & seals

MOUNTED BEARING PART NUMBER	d			Sphere OD size								Sph depth	Bolt size	Brg c/l to front	Brg c/l to back	Overall LTB of brg (I+M)	Brg collar size	Housing PN	Ball bearing PN
	mm	in	16th	D	A	B	C	E	F	G	L	I	S	M	N	Z	K		SETSCREW
4Y24AC8-12 x		3/4	12	2.047	4.38	3	0.38	2.56	3.63	0.81	1.19	0.34	3/8	0.78	0.56	1.50	1.34	24AC	4Y205-12 x
4Y24AC8-14 x		7/8	14	52	111.1	76.2	9.5	65.1	92.1	20.6	30.2	8.7		19.8	14.2	38.0	34.0		4Y205-14 x
4Y24AC8-15 x		15/16	15																4Y205-15 x
4Y24AC8-25M x	25																		4Y205-25M x
4Y24AC8-16 x		1	16																4Y205-16 x
4Y24AD8-16 x		1	16	2.441	4.38	3	0.38	2.56	3.63	0.88	1.25	0.34	3/8	0.87	0.63	1.59	1.59	24AD	4Y206-16 x
4Y24AD8-17 x		1-1/16	17	62	111.1	76.2	9.5	65.1	92.1	22.2	31.8	8.7		22.1	16.0	40.5	40.4		4Y206-17 x
4Y24AD8-18 x		1-1/8	18																4Y206-18 x
4Y24AD8-30M x	30																		4Y206-30M x
4Y24AD8-19 x		1-3/16	19																4Y206-19 x
4Y24AD8-20 x		1-1/4	20																4Y206-20 x
4Y24AE8-19 x		1-3/16	19	2.835	5	3.38	0.38	2.92	4.13	0.88	1.25	0.33	7/16	1	0.69	1.71	1.84	24AE	4Y207-19 x
4Y24AE8-20 x		1-1/4	20	72	127.0	85.7	9.5	74.1	104.8	22.2	31.8	8.4		25.4	17.5	43.3	46.7		4Y207-20 x
4Y24AE8-21 x		1-5/16	21																4Y207-21 x
4Y24AE8-22 x		1-3/8	22																4Y207-22 x
4Y24AE8-35M x	35																		4Y207-35M x
4Y24AE8-23 x		1-7/16	23																4Y207-23 x
4Y24AF8-23 x		1-7/16	23	3.150	5.25	3.63	0.44	3.09	4.38	0.88	1.31	0.31	7/16	1.19	0.75	1.94	2.08	24AF	4Y208-23 x
4Y24AF8-24 x		1-1/2	24	80	133.4	92.1	11.1	78.6	111.1	22.2	33.4	7.9		30.2	19.1	49.3	52.8		4Y208-24 x
4Y24AF8-40M x	40																		4Y208-40M x
4Y24AG8-24 x		1-1/2	24	3.346	5.25	3.63	0.44	3.09	4.38	0.88	1.31	0.31	1/2	1.19	0.75	1.94	2.31	24AG	4Y209-24 x
4Y24AG8-26 x		1-5/8	26	85	133.4	92.1	11.1	78.6	111.1	22.2	33.4	7.9		30.2	19.1	49.3	58.7		4Y209-26 x
4Y24AG8-27 x		1-11/16	27																4Y209-27 x
4Y24AG8-28 x		1-3/4	28																4Y209-28 x
4Y24AG8-45M x	45																		4Y209-45M x
4Y24AG-DSC8-24 x		1-1/2	24	3.346	5.75	4.00	0.44	3.36	4.75	1.00	1.44	0.34	1/2	1.19	0.75	1.94	2.31	24AG-DSC	4Y209-24 x
4Y24AG-DSC8-26 x		1-5/8	26	85	146.1	101.6	11.1	85.3	120.7	25.4	36.5	8.7		30.2	19.1	49.3	58.7		4Y209-26 x
4Y24AG-DSC8-27 x		1-11/16	27																4Y209-27 x
4Y24AG-DSC8-28 x		1-3/4	28																4Y209-28 x
4Y24AG-DSC8-45M x	45																		4Y209-45M x
4Y24AH8-28 x		1-3/4	28	3.543	6.00	4.25	0.63	3.62	5.13	0.88	1.5	0.24	1/2	1.28	0.75	2.14	2.45	24AH	4Y210-28 x
4Y24AH8-30 x		1-7/8	30	90	152.4	108.0	15.9	92.0	130.2	22.2	38.1	6.0		32.5	19.1	54.5	62.2		4Y210-30 x
4Y24AH8-31 x		1-15/16	31																4Y210-31 x
4Y24AH8-50M x	50																		4Y210-50M x
4Y24AH8-32 x		2	32																4Y210-32 x
4Y24AI8-32 x		2	32	3.937	6.38	4.5	0.63	3.80	5.38	0.88	1.5	0.19	1/2	1.31	0.87	2.13	2.76	24AI	4Y211-32 x
4Y24AI8-55M x	55			100	161.9	114.3	15.9	96.5	136.5	22.2	38.1	4.8		33.3	22.1	54.1	70.1		4Y211-55M x
4Y24AI8-35 x		2-3/16	35																4Y211-35 x
4Y24AI8-36 x		2-1/4	36																4Y211-36 x
4Y24AJ8-36 x		2-1/4	36	4.331	7.13	5	0.88	4.24	6	1.00	1.88	0.19	9/16	1.56	1	2.63	3.03	24AJ	4Y212-36 x
4Y24AJ8-60M x	60			110	181.0	127.0	22.2	107.8	152.4	25.4	47.6	4.7		39.6	25.4	66.7	77.0		4Y212-60M x
4Y24AJ8-39 x		2-7/16	39																4Y212-39 x
4Y24AK8-39 x		2-7/16	39	4.921	7.63	5.5	1.00	4.60	6.5	1.00	2	0.11	9/16	1.75	1.19	2.86	3.43	24AK	4Y214-39 x
4Y24AK8-40 x		2-1/2	40	125	193.7	139.7	25.4	116.7	165.1	25.4	50.8	2.7		44.5	30.2	72.5	87.1		4Y214-40 x
4Y24AK8-70M x	70																		4Y214-70M x
4Y24AK8-44 x		2-3/4	44																4Y214-44 x
4Y24AL8-40 x				5.128	8.75	6.38	1.13	5.30	7.5	1.00	2.13	0.12	11/16	1.75	1.31	3.00	3.6	24AL	4Y215-40
4Y24AL8-43 x		2-11/16	43	130	222.3	161.9	28.6	134.7	190.5	25.4	54.0	3.1		44.5	33.3	76.2	91.4		4Y215-43 x
4Y24AL8-44 x		2-3/4	44																4Y215-44 x
4Y24AL8-45 x		2-13/16	45																4Y215-45 x
4Y24AL8-47 x		2-15/16	47																4Y215-47 x
4Y24AL8-75M x	75																		4Y215-75M x
4Y24AL8-48 x		3	48																4Y215-48 x

X indicates a 2-letter designation for lube & seals
G = food grade grease
F = food grade EPL
Other alpha - refer to page 3
X = standard configuration
O = open (no seal or flinger)
Others - refer to page 3
Example: GX = food grade grease with standard seals & flingers

Stainless Ball Solution®
Piloted Flange Bearing

CLASSIC or VALUE

Set screw locking stainless ball bearing Series "4Y"
Piloted flange pattern Series "24"
Polymer housing Series "G"

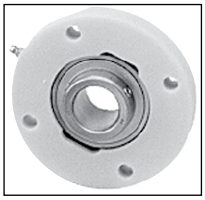

More Sizes / Styles
Inserts pgs F-5 to F-9
Eccentric inserts in SS or KG: pgs F-10 to F-34
QuiKlean® eccentric: pgs F-34 to F-47
Set screw inserts in SS or KG: pgs F-48 to F-72
QuiKlean® set screw: pgs F-72 to F-85

"x" indicates a 2-letter designation referring to lube & seals

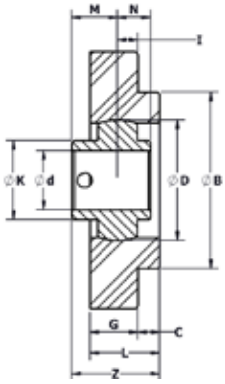

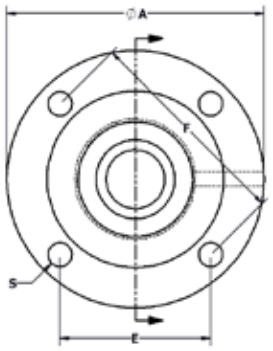

Polymer Housing

MOUNTED BEARING PART NUMBER	d mm	d in	d 16th	Sphere OD size D	A	B	C	E	F	G	L	Sph depth I	Bolt size S	Brg c/l to front M	Brg c/l to back N	Overall LTB of brg (I+M) Z	Brg collar size K	Housing PN	Ball bearing PN SETSCREW
4Y24GC8-12 x		3/4	12	2.047	4.38	3	0.38	2.56	3.63	0.81	1.19	0.34	3/8	0.78	0.56	1.50	1.34	24GC	4Y205-12 x
4Y24GC8-14 x		7/8	14	52	111.1	76.2	9.5	65.1	92.1	20.6	30.2	8.7		19.8	14.2	38.0	34.0		4Y205-14 x
4Y24GC8-15 x		15/16	15																4Y205-15 x
4Y24GC8-25M x	25																		4Y205-25M x
4Y24GC8-16 x		1	16																4Y205-16 x
4Y24GD8-16 x		1	16	2.441	4.38	3	0.38	2.56	3.63	0.88	1.25	0.34	3/8	0.87	0.63	1.59	1.59	24GD	4Y206-16 x
4Y24GD8-17 x		1-1/16	17	62	111.1	76.2	9.5	65.1	92.1	22.2	31.8	8.7		22.1	16.0	40.5	40.4		4Y206-17 x
4Y24GD8-18 x		1-1/8	18																4Y206-18 x
4Y24GD8-30M x	30																		4Y206-30M x
4Y24GD8-19 x		1-3/16	19																4Y206-19 x
4Y24GD8-20 x		1-1/4	20																4Y206-20 x
4Y24GE8-19 x		1-3/16	19	2.835	5	3.38	0.38	2.92	4.13	0.88	1.25	0.33	7/16	1	0.69	1.71	1.84	24GE	4Y207-19 x
4Y24GE8-20 x		1-1/4	20	72	127.0	85.7	9.5	74.1	104.8	22.2	31.8	8.4		25.4	17.5	43.3	46.7		4Y207-20 x
4Y24GE8-21 x		1-5/16	21																4Y207-21 x
4Y24GE8-22 x		1-3/8	22																4Y207-22 x
4Y24GE8-35M x	35																		4Y207-35M x
4Y24GE8-23 x		1-7/16	23																4Y207-23 x
4Y24GF8-23 x		1-7/16	23	3.150	5.25	3.63	0.44	3.09	4.37	0.88	1.31	0.31	7/16	1.19	0.75	1.94	2.08	24GF	4Y208-23 x
4Y24GF8-24 x		1-1/2	24	80	133.4	92.1	11.1	78.6	111.0	22.2	33.4	7.9		30.2	19.1	49.3	52.8		4Y208-24 x
4Y24GF8-40M x	40																		4Y208-40M x
4Y24GG8-24 x		1-1/2	24	3.346	5.25	3.63	0.44	3.09	4.38	0.88	1.31	0.31	1/2	1.19	0.75	1.94	2.31	24GG	4Y209-24 x
4Y24GG8-26 x		1-5/8	26	85	133.4	92.1	11.1	78.6	111.1	22.2	33.4	7.9		30.2	19.1	49.3	58.7		4Y209-26 x
4Y24GG8-27 x		1-11/16	27																4Y209-27 x
4Y24GG8-28 x		1-3/4	28																4Y209-28 x
4Y24GG8-45M x	45																		4Y209-45M x
4Y24GG-DSC8-24 x		1-1/2	24	3.346	5.75	4.00	0.44	3.36	4.75	0.88	1.31	0.31	1/2	1.19	0.75	1.94	2.31	24GG-DSC	4Y209-24 x
4Y24GG-DSC8-26 x		1-5/8	26	85	146.1	101.6	11.1	85.3	120.7	22.2	33.4	7.9		30.2	19.1	49.3	58.7		4Y209-26 x
4Y24GG-DSC8-27 x		1-11/16	27																4Y209-27 x
4Y24GG-DSC8-28 x		1-3/4	28																4Y209-28 x
4Y24GG-DSC8-45M x	45																		4Y209-45M x
4Y24GH8-28 x		1-3/4	28	3.543	6.06	4.25	0.63	3.62	5.13	0.88	1.5	0.24	1/2	1.28	0.75	2.14	2.45	24GH	4Y210-28 x
4Y24GH8-30 x		1-7/8	30	90	153.9	108.0	15.9	92.0	130.2	22.2	38.1	6.0		32.5	19.1	54.5	62.2		4Y210-30 x
4Y24GH8-31 x		1-15/16	31																4Y210-31 x
4Y24GH8-50M x	50																		4Y210-50M x
4Y24GH8-32 x		2	32																4Y210-32 x
4Y24GI8-32 x		2	32	3.937	6.38	4.5	0.63	3.80	5.38	0.88	1.5	0.19	1/2	1.31	0.87	2.13	2.76	24GI	4Y211-32 x
4Y24GI8-55M x	55			100	161.9	114.3	15.9	96.5	136.5	22.2	38.1	4.8		33.3	22.1	54.1	70.1		4Y211-55M x
4Y24GI8-35 x		2-3/16	35																4Y211-35 x
4Y24GI8-36 x		2-1/4	36																4Y211-36 x
4Y24GJ8-36 x		2-1/4	36	4.331	7.13	5	0.88	4.24	6	1.00	1.88	0.19	9/16	1.56	1	2.63	3.03	24GJ	4Y212-36 x
4Y24GJ8-60M x	60			110	181.0	127.0	22.2	107.8	152.4	25.4	47.6	4.7		39.6	25.4	66.7	77.0		4Y212-60M x
4Y24GJ8-39 x		2-7/16	39																4Y212-39 x
4Y24GK8-39 x		2-7/16	39	4.921	7.63	5.5	1.00	4.60	6.5	1.00	2	0.11	9/16	1.75	1.19	2.86	3.43	24GK	4Y214-39 x
4Y24GK8-40 x		2-1/2	40	125	193.7	139.7	25.4	116.7	165.1	25.4	50.8	2.7		44.5	30.2	72.5	87.1		4Y214-40 x
4Y24GK8-70M x	70																		4Y214-70M x
4Y24GK8-44 x		2-3/4	44																4Y214-44 x
4Y24GL8-40 x				5.128	8.75	6.38	1.13	5.30	7.5	1.00	2.13	0.12	11/16	1.75	1.31	3.00	3.6	24GL	4Y215-40
4Y24GL8-43 x		2-11/16	43	130	222.3	161.9	28.6	134.7	190.5	25.4	54.0	3.1		44.5	33.3	76.2	91.4		4Y215-43 x
4Y24GL8-44 x		2-3/4	44																4Y215-44 x
4Y24GL8-45 x		2-13/16	45																4Y215-45 x
4Y24GL8-47 x		2-15/16	47																4Y215-47 x
4Y24GL8-75M x	75																		4Y215-75M x
4Y24GL8-48 x		3	48																4Y215-48 x

X indicates a 2-letter designation for lube & seals
G = food grade grease
F = food grade EPL
Other alpha - refer to page 3
X = standard configuration
O = open (no seal or flinger)
Others - refer to page 3
Example: GX = food grade grease with standard seals & flingers

Stainless Ball Solution® Four-Bolt Flange

CLASSIC or VALUE

Set screw locking stainless ball bearing Series "4Y"
Standard four-bolt pattern Series "4_-01"
Stainless housing Series "A"



More Sizes / Styles
Inserts pgs F-5 to F-9
Eccentric inserts in SS or KG: pgs F-10 to F-34
QuiKlean® eccentric: pgs F-34 to F-47
Set screw inserts in SS or KG: pgs F-48 to F-72
QuiKlean® set screw: pgs F-72 to F-85

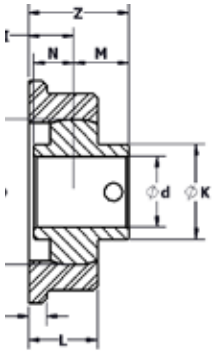

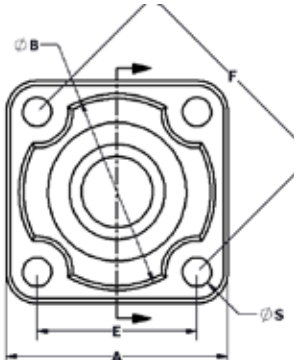

Stainless Housing

"x" indicates a 2-letter designation referring to lube & seals

MOUNTED BEARING PART NUMBER	d			Sphere OD size							Sph depth	Bolt size	Brg c/l to front	Brg c/l to back	Overall LTB of brg (I+M)	Brg collar size	Housing PN	Ball bearing PN
	mm	in	16th	D	A	B	E	F	G	L	I	S	M	N	Z	K		SETSCREW
4Y4AC-018-12 x		3/4	12	2.047	3.13	2.76	2.25	3.18	0.25	0.97	0.64	3/8"	0.78	0.56	1.42	1.34	4AC-01	4Y205-12 x
4Y4AC-018-14 x		7/8	14	52	79.5	70.1	57.2	80.8	6.4	24.6	16.3		19.8	14.2	36.1	34.0		4Y205-14 x
4Y4AC-018-15 x		15/16	15															4Y205-15 x
4Y4AC-018-25M x	25																	4Y205-25M x
4Y4AC-018-16 x		1	16															4Y205-16 x

Stainless Ball Solution® Four-Bolt Flange (QuiKlean®) with 5/8" Stand-off

CLASSIC or VALUE

Set screw locking stainless ball bearing Series "4Y"
Standard four-bolt pattern Series "4_-01"
Stainless housing Series "A"
5/8" stand-off above base "QK"

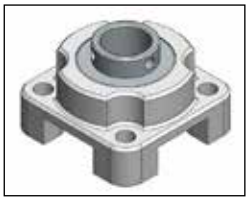

More Sizes / Styles
Inserts pgs F-5 to F-9
Eccentric inserts in SS or KG: pgs F-10 to F-34
QuiKlean® eccentric: pgs F-34 to F-47
Set screw inserts in SS or KG: pgs F-48 to F-72
QuiKlean® set screw: pgs F-72 to F-85

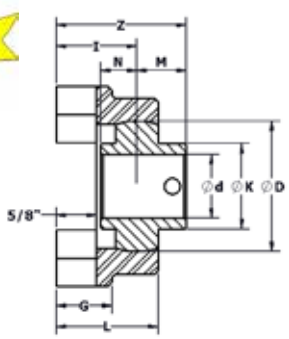

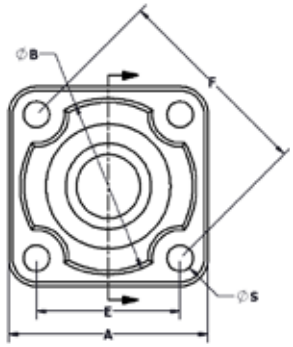

Stainless Housing

"x" indicates a 2-letter designation referring to lube & seals

MOUNTED BEARING PART NUMBER	d			Sphere OD size							Sph depth	Bolt size	Brg c/l to front	Brg c/l to back	Overall LTB of brg (I+M)	Brg collar size	Housing PN	Ball bearing PN
	mm	in	16th	D	A	B	E	F	G	L	I	S	M	N	Z	K		SETSCREW
4Y4AC-01-QK8-12 x		3/4	12	2.047	3.13	2.76	2.25	3.18	0.88	1.60	1.27	3/8"	0.78	0.56	2.05	1.34	4AC-01-QK	4Y205-12 x
4Y4AC-01-QK8-14 x		7/8	14	52	79.5	70.1	57.2	80.8	22.2	40.5	32.1		19.8	14.2	51.9	34.0		4Y205-14 x
4Y4AC-01-QK8-15 x		15/16	15															4Y205-15 x
4Y4AC-01-QK8-25M x	25																	4Y205-25M x
4Y4AC-01-QK8-16 x		1	16															4Y205-16 x

QuiKlean® housing with integral standoff is 5/8" above the base of standard units

X indicates a 2-letter designation for lube & seals
G = food grade grease
F = food grade EPL
Other alpha - refer to page 3
X = standard configuration
O = open (no seal or flinger)
Others - refer to page 3
Example: GX = food grade grease with standard seals & flingers

Stainless Ball Solution® Breader Bearing

CLASSIC

Stainless QuiKlean® housing
Assembly includes PA backing plate and stainless ball bearing, either:
- **Food grade solid lubricant (prefix ZJ)**
- **Food grade grease (prefix ZY)**
- **H1 graphite lubricant (prefix ZW)**



More Sizes / Styles
Inserts pgs F-5 to F-9
Eccentric inserts in SS or KG: pgs F-10 to F-34
QuiKlean® eccentric: pgs F-34 to F-47
Set screw inserts in SS or KG: pgs F-48 to F-72
QuiKlean® set screw: pgs F-72 to F-85

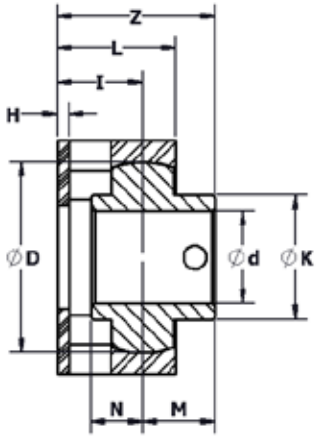

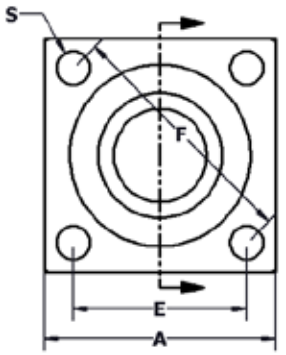

Stainless Housing

"x" indicates a 2-letter designation referring to lube & seals

MOUNTED BEARING PART NUMBER	d		Sphere OD size							Bolt size	Brg c/l to front	Brg c/l to back	Overall LTB of brg (I+M)	Brg collar size	Standoff	Housing PN	Ball bearing PN
	in	16th	D	A	E	F	H	L	I	S	M	N	Z	K			SETSCREW
ZJZA100-QK8-3/4	3/4	12	2.047	2.5	1.875	2.65	0.13	1.28	0.93	5/16	0.78	0.56	1.71	1.34	0.50 / 12.7	ZA100-QK	4Y205-12FX
ZJZA100-QK8-1	1	16	52	63.5	47.6	67.3	3.2	32.5	23.6		19.8	14.2	43.4	34.0			4Y205-16FX
ZWZA100-QK8-1	1	16															4Y205-16WX
ZYZA100-QK8-1	1	16															4Y205-16GX

Stainless Ball Solution® Breader Auger

CLASSIC

For vertical shaft on JBT Breader
Stainless four bolt flange with exclusionary seal and solid lubricant, stainless ball bearing





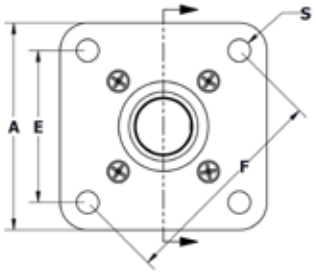

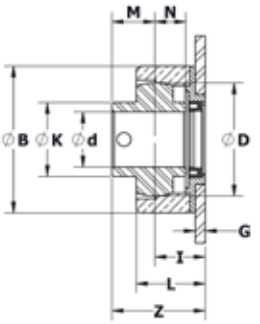

Stainless Housing

MOUNTED BEARING PART NUMBER	d		Sphere OD size								Bolt size	Brg c/l to front	Brg c/l to back	Overall LTB of brg (I+M)	Brg collar size	Seal	Housing PN	Ball bearing PN
	in	16th	D	A	B	E	F	G	I	L	S	M	N	Z	K			SETSCREW
ZJZA400-ON8-1	1	16	2.047 52	3.75 95.3	2.66 67.6	2.75 69.9	3.89 98.8	0.18 4.6	0.91 23.12	1.25 31.8	3/8	0.78 19.8	0.56 14.2	1.69 42.3	1.34 34.0	EDT-Glove® C	ZA100-QK	4Y205-16FX

X indicates a 2-letter designation for lube & seals

G = food grade grease
F = food grade EPL
Other alpha - refer to page 3
X = standard configuration
O = open (no seal or flinger)
Others - refer to page 3

Example: GX = food grade grease with standard seals & flingers

Stainless Ball Solution® Pillow Block (QuiKlean®) with 5/8” Stand-off

CLASSIC or VALUE

Set screw locking stainless ball bearing Series “4Y”
Standard backing height Series “1”
Stainless housing Series “A”
5/8" stand-off above base “QK”

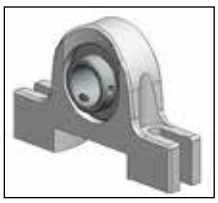

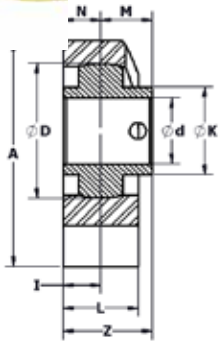

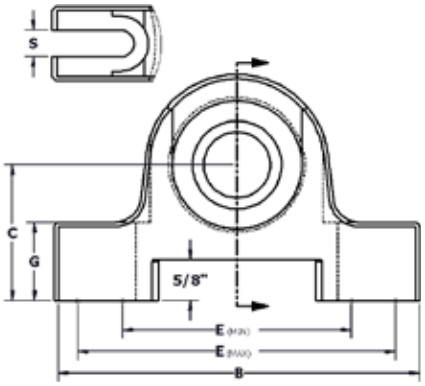

Stainless Housing

More Sizes / Styles
Inserts pgs F-5 to F-9
Eccentric inserts in SS or KG: pgs F-10 to F-34
QuiKlean® eccentric: pgs F-34 to F-47
Set screw inserts in SS or KG: pgs F-48 to F-72
QuiKlean® set screw: pgs F-72 to F-85

“x” indicates a 2-letter designation referring to lube & seals

QK only available on standard height

MOUNTED BEARING PART NUMBER	d			Sphere OD size									Sph. depth	Bolt size	Brg c/l to front	Brg c/l to back	Overall LTB of brg (I+M)	Brg collar size	Housing PN	Ball bearing PN
	mm	in	16th	D	A	B	C	E min	E max	G	L		I	S	M	N	Z	K		SETSCREW
4Y1AC-QK8-12 x		3/4	12	2.047	3.438	5.5	2.063	3.44	4.63	1.188	1.13		0.56	3/8	0.78	0.56	1.34	1.34	1AC-QK	4Y205-12 x
4Y1AC-QK8-14 x		7/8	14	52	87.3	139.7	52.4	87.4	117.6	30.2	28.7		14.2		19.8	14.2	34.0	34.0		4Y205-14 x
4Y1AC-QK8-15 x		15/16	15																	4Y205-15 x
4Y1AC-QK8-25M x	25																			4Y205-25M x
4Y1AC-QK8-16 x		1	16																	4Y205-16 x

QuiKlean® housing with integral standoff is 5/8” above the base of standard units

X indicates a 2-letter designation for lube & seals
G = food grade grease
F = food grade EPL
Other alpha - refer to page 3
X = standard configuration
O = open (no seal or flinger)
Others - refer to page 3
Example: GX = food grade grease with standard seals & flingers

Stainless Ball Solution® Pillow Block (QuiKlean®) with 5/8" Stand-off

CLASSIC or VALUE

Set screw locking stainless ball bearing Series "4Y"
Standard backing height Series "1"
Polymer housing Series "G"
5/8" stand-off above base "QK"



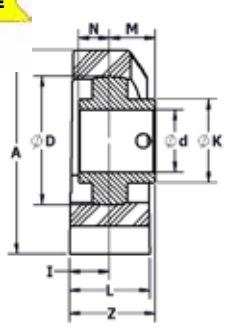

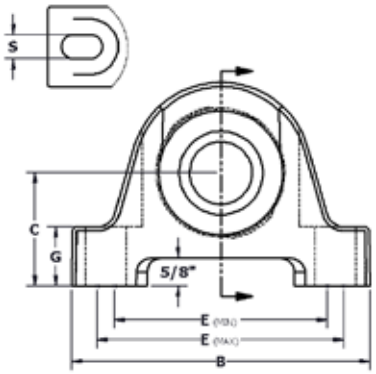

Polymer Housing

More Sizes / Styles
Inserts pgs F-5 to F-9
Eccentric inserts in SS or KG: pgs F-10 to F-34
QuiKlean® eccentric: pgs F-34 to F-47
Set screw inserts in SS or KG: pgs F-48 to F-72
QuiKlean® set screw: pgs F-72 to F-85

"x" indicates a 2-letter designation referring to lube & seals

QK only available on standard height

MOUNTED BEARING PART NUMBER	d			Sphere OD size								Sph. depth	Bolt size	Brg c/l to front	Brg c/l to back	Overall LTB of brg (I+M)	Brg collar size	Housing PN	Ball bearing PN
	mm	in	16th	D	A	B	C	E min	E max	G	L	I	S	M	N	Z	K		SETSCREW
4Y1GA-QK8-12M x	12			1.575	2.88	5	1.69	2.94	4.06	1.06	1.25	0.63	3/8	0.61	0.41	1.24	0.97	1AA-QK	4Y203-12M x
4Y1GA-QK8-08 x		1/2	8	40	73.2	127.0	42.9	74.7	103.1	26.9	31.8	15.9		15.5	10.4	31.4	24.6		4Y203-08 x
4Y1GA-QK8-09 x		9/16	9																4Y203-09 x
4Y1GA-QK8-15M x	15																		4Y203-15M x
4Y1GA-QK8-10 x		5/8	10																4Y203-10 x
4Y1GA-QK8-17M x	17																		4Y203-17M x
4Y1GB-QK8-12M x	12			1.850	3.31	5.27	1.94	3.25	4.38	1.13	1.4	0.69	3/8	0.72	0.5	1.41	1.14	1AB-QK	4Y204-12M x
4Y1GB-QK8-08 x		1/2	8	47	84.1	133.9	49.3	82.6	111.3	28.6	35.6	17.5		18.3	12.7	35.8	29.0		4Y204-08 x
4Y1GB-QK8-15M x	15																		4Y204-15M x
4Y1GB-QK8-10 x		5/8	10																4Y204-10 x
4Y1GB-QK8-17M x	17																		4Y204-17M x
4Y1GB-QK8-11 x		11/16	11																4Y204-11 x
4Y1GB-QK8-12 x		3/4	12																4Y204-12 x
4Y1GB-QK8-20M x	20																		4Y204-20M x
4Y1GC-QK8-12 x		3/4	12	2.047	3.56	5.5	2.06	3.44	4.63	1.19	1.52	0.75	3/8	0.78	0.56	1.53	1.34	1AC-QK	4Y205-12 x
4Y1GC-QK8-14 x		7/8	14	52	90.4	139.7	52.3	87.4	117.6	30.2	38.6	19.1		19.8	14.2	38.9	34.0		4Y205-14 x
4Y1GC-QK8-15 x		15/16	15																4Y205-15 x
4Y1GC-QK8-25M x	25																		4Y205-25M x
4Y1GC-QK8-16 x		1	16																4Y205-16 x
4Y1GD-QK8-16 x		1	16	2.441	4	6.25	2.31	4.13	5.13	1.31	1.75	0.88	1/2	0.87	0.63	1.75	1.59	1AD-QK	4Y206-16 x
4Y1GD-QK8-17 x		1-1/16	17	62	101.6	158.8	58.7	104.9	130.3	33.3	44.5	22.2		22.1	16.0	44.3	40.4		4Y206-17 x
4Y1GD-QK8-18 x		1-1/8	18																4Y206-18 x
4Y1GD-QK8-30M x	30																		4Y206-30M x
4Y1GD-QK8-19 x		1-3/16	19																4Y206-19 x
4Y1GD-QK8-20 x		1-1/4	20																4Y206-20 x
4Y1GE-QK8-19 x		1-3/16	19	2.835	4.5	6.56	2.5	4.69	5.44	1.31	1.75	0.88	1/2	1	0.69	1.88	1.84	1AE-QK	4Y207-19 x
4Y1GE-QK8-20 x		1-1/4	20	72	114.3	166.6	63.5	119.1	138.2	33.3	44.5	22.2		25.4	17.5	47.6	46.7		4Y207-20 x
4Y1GE-QK8-21 x		1-5/16	21																4Y207-21 x
4Y1GE-QK8-22 x		1-3/8	22																4Y207-22 x
4Y1GE-QK8-35M x	35																		4Y207-35M x
4Y1GE-QK8-23 x		1-7/16	23																4Y207-23 x
4Y1GF-QK8-23 x		1-7/16	23	3.150	4.94	7.25	2.75	5	6.13	1.38	1.94	0.97	1/2	1.19	0.75	2.16	2.08	1AF-QK	4Y208-23 x
4Y1GF-QK8-24 x		1-1/2	24	80	125.5	184.2	69.9	127.0	155.7	34.9	49.3	24.6		30.2	19.1	54.9	52.8		4Y208-24 x
4Y1GF-QK8-40M x	40																		4Y208-40M x

QuiKlean® housing with integral standoff is 5/8" above the base of standard units

X indicates a 2-letter designation for lube & seals
G = food grade grease
F = food grade EPL
Other alpha - refer to page 3
X = standard configuration
O = open (no seal or flinger)
Others - refer to page 3
Example: GX = food grade grease with standard seals & flingers

Stainless Ball Solution® Tapped Base Pillow Block (QuiKlean®) with 5/8" Stand-off

CLASSIC or VALUE

Set screw locking stainless ball bearing Series "4Y"
Tapped base housing Series "9"
Stainless housing Series "A"
5/8" stand-off above base "QK"



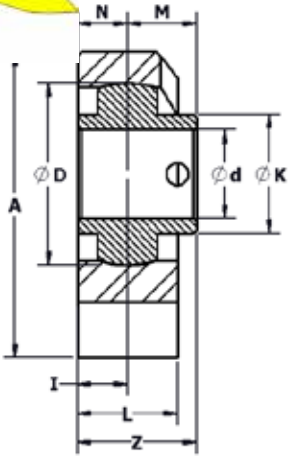

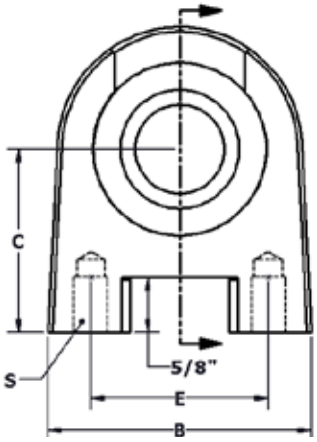

Stainless Housing

More Sizes / Styles
Inserts pgs F-5 to F-9
Eccentric inserts in SS or KG: pgs F-10 to F-34
QuiKlean® eccentric: pgs F-34 to F-47
Set screw inserts in SS or KG: pgs F-48 to F-72
QuiKlean® set screw: pgs F-72 to F-85

"x" indicates a 2-letter designation referring to lube & seals

MOUNTED BEARING PART NUMBER	d			Sphere OD size						Sph depth	Bolt size	Brg c/l to front	Brg c/l to back	Overall LTB of brg (I+M)	Brg collar size	Housing PN	Ball bearing PN
	mm	in	16th	D	A	B	C	E	L	I	S	M	N	Z	K		SETSCREW
4Y9AA-QK8-12M x	12			1.575	3.03	2.88	1.94	2	1.13	0.56	3/8-16	0.61	0.41	1.17	0.97	9AA-QK	4Y203-12M x
4Y9AA-QK8-08 x		1/2	8	40	77.0	73.2	49.3	50.8	28.7	14.2		15.5	10.4	29.7	24.6		4Y203-08 x
4Y9AA-QK8-09 x		9/16	9														4Y203-09 x
4Y9AA-QK8-15M x	15																4Y203-15M x
4Y9AA-QK8-10 x		5/8	10														4Y203-10 x
4Y9AA-QK8-17M x	17																4Y203-17M x
4Y9AB-QK8-12M x	12			1.850	3.16	2.88	1.94	2	1.13	0.56	3/8-16	0.72	0.5	1.28	1.14	9AB-QK	4Y204-12M x
4Y9AB-QK8-08 x		1/2	8	47	80.3	73.2	49.3	50.8	28.7	14.2		18.3	12.7	32.5	29.0		4Y204-08 x
4Y9AB-QK8-15M x	15																4Y204-15M x
4Y9AB-QK8-10 x		5/8	10														4Y204-10 x
4Y9AB-QK8-17M x	17																4Y204-17M x
4Y9AB-QK8-11 x		11/16	11														4Y204-11 x
4Y9AB-QK8-12 x		3/4	12														4Y204-12 x
4Y9AB-QK8-20M x	20																4Y204-20M x
4Y9AC-QK8-12 x		3/4	12	2.047	3.44	3	2.06	2	1.13	0.56	3/8-16	0.78	0.56	1.34	1.34	9AC-QK	4Y205-12 x
4Y9AC-QK8-14 x		7/8	14	52	87.4	76.2	52.3	50.8	28.7	14.2		19.8	14.2	34.0	34.0		4Y205-14 x
4Y9AC-QK8-15 x		15/16	15														4Y205-15 x
4Y9AC-QK8-25M x	25																4Y205-25M x
4Y9AC-QK8-16 x		1	16														4Y205-16 x
4Y9AD-QK8-16 x		1	16	2.441	3.88	4	2.31	3	1.47	0.74	7/16-14	0.87	0.63	1.61	1.59	9AD-QK	4Y206-16 x
4Y9AD-QK8-17 x		1-1/16	17	62	98.6	101.6	58.7	76.2	37.3	18.8		22.1	16.0	40.9	40.4		4Y206-17 x
4Y9AD-QK8-18 x		1-1/8	18														4Y206-18 x
4Y9AD-QK8-30M x	30																4Y206-30M x
4Y9AD-QK8-19 x		1-3/16	19														4Y206-19 x
4Y9AD-QK8-20 x		1-1/4	20														4Y206-20 x
4Y9AE-QK8-19 x		1-3/16	19	2.835	4.31	4.25	2.5	3.25	1.47	0.74	1/2-13	1	0.69	1.74	1.84	9AE-QK	4Y207-19 x
4Y9AE-QK8-20 x		1-1/4	20	72	109.5	108.0	63.5	82.6	37.3	18.8		25.4	17.5	44.2	46.7		4Y207-20 x
4Y9AE-QK8-21 x		1-5/16	21														4Y207-21 x
4Y9AE-QK8-22 x		1-3/8	22														4Y207-22 x
4Y9AE-QK8-35M x	35																4Y207-35M x
4Y9AE-QK8-23 x		1-7/16	23														4Y207-23 x
4Y9AF-QK8-23 x		1-7/16	23	3.150	4.56	4.63	2.56	3.5	1.63	0.81	1/2-13	1.19	0.75	2.00	2.08	9AF-QK	4Y208-23 x
4Y9AF-QK8-24 x		1-1/2	24	80	115.8	117.6	65.0	88.9	41.4	20.6		30.2	19.1	50.8	52.8		4Y208-24 x
4Y9AF-QK8-40M x	40																4Y208-40M x

QuiKlean® housing with integral standoff is 5/8" above the base of standard units

X indicates a 2-letter designation for lube & seals
G = food grade grease
F = food grade EPL
Other alpha - refer to page 3
X = standard configuration
O = open (no seal or flinger)
Others - refer to page 3
Example: GX = food grade grease with standard seals & flingers

Stainless Ball Solution® Tapped Base Pillow Block (QuiKlean®) with 5/8" Stand-off

CLASSIC or VALUE

Set screw locking stainless ball bearing Series "4Y"
Tapped base housing Series "9"
Polymer housing Series "G"
5/8" stand-off above base "QK"



More Sizes / Styles
Inserts pgs F-5 to F-9
Eccentric inserts in SS or KG: pgs F-10 to F-34
QuiKlean® eccentric: pgs F-34 to F-47
Set screw inserts in SS or KG: pgs F-48 to F-72
QuiKlean® set screw: pgs F-72 to F-85

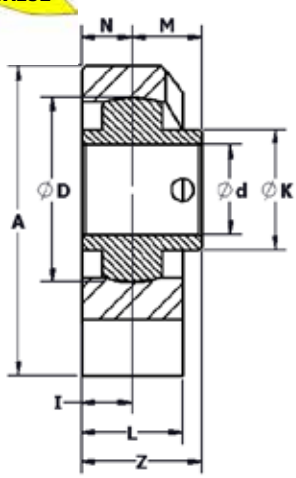

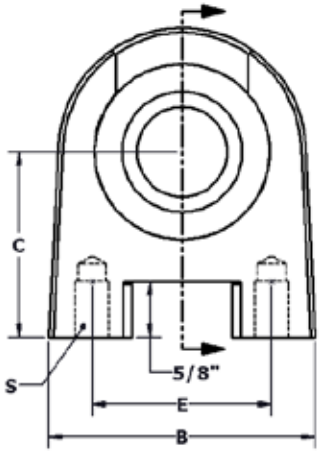

Polymer Housing

"x" indicates a 2-letter designation referring to lube & seals

MOUNTED BEARING PART NUMBER	d			Sphere OD size						Sph depth	Bolt size	Brg c/l to front	Brg c/l to back	Overall LTB of brg (I+M)	Brg collar size	Housing PN	Ball bearing PN
	mm	in	16th	D	A	B	C	E	L	I	S	M	N	Z	K		SETSCREW
4Y9GA-QK8-12M x	12			1.575	3.08	2.94	1.94	2	1.12	0.56	3/8-16	0.61	0.41	1.17	0.97	9GA-QK	4Y203-12M x
4Y9GA-QK8-08 x		1/2	8	40	78.2	74.7	49.3	50.8	28.4	14.2		15.5	10.4	29.7	24.6		4Y203-08 x
4Y9GA-QK8-09 x		9/16	9														4Y203-09 x
4Y9GA-QK8-15M x	15																4Y203-15M x
4Y9GA-QK8-10 x		5/8	10														4Y203-10 x
4Y9GA-QK8-17M x	17																4Y203-17M x
4Y9GB-QK8-12M x	12			1.850	3.2	3.07	1.94	2	1.13	0.56	3/8-16	0.72	0.5	1.28	1.14	9GB-QK	4Y204-12M x
4Y9GB-QK8-08 x		1/2	8	47	81.3	78.0	49.3	50.8	28.7	14.2		18.3	12.7	32.5	29.0		4Y204-08 x
4Y9GB-QK8-15M x	15																4Y204-15M x
4Y9GB-QK8-10 x		5/8	10														4Y204-10 x
4Y9GB-QK8-17M x	17																4Y204-17M x
4Y9GB-QK8-11 x		11/16	11														4Y204-11 x
4Y9GB-QK8-12 x		3/4	12														4Y204-12 x
4Y9GB-QK8-20M x	20																4Y204-20M x
4Y9GC-QK8-12 x		3/4	12	2.047	3.44	3.11	2.06	2	1.16	0.57	3/8-16	0.78	0.56	1.35	1.34	9GC-QK	4Y205-12 x
4Y9GC-QK8-14 x		7/8	14	52	87.4	79.0	52.3	50.8	29.5	14.5		19.8	14.2	34.3	34.0		4Y205-14 x
4Y9GC-QK8-15 x		15/16	15														4Y205-15 x
4Y9GC-QK8-25M x	25																4Y205-25M x
4Y9GC-QK8-16 x		1	16														4Y205-16 x
4Y9GD-QK8-16 x		1	16	2.441	4	4.25	2.31	3	1.63	0.81	7/16-14	0.87	0.63	1.68	1.59	9GD-QK	4Y206-16 x
4Y9GD-QK8-17 x		1-1/16	17	62	101.6	108.0	58.7	76.2	41.4	20.6		22.1	16.0	42.7	40.4		4Y206-17 x
4Y9GD-QK8-18 x		1-1/8	18														4Y206-18 x
4Y9GD-QK8-30M x	30																4Y206-30M x
4Y9GD-QK8-19 x		1-3/16	19														4Y206-19 x
4Y9GD-QK8-20 x		1-1/4	20														4Y206-20 x
4Y9GE-QK8-19 x		1-3/16	19	2.835	4.5	4.66	2.5	3.25	1.75	0.88	1/2-13	1	0.69	1.88	1.84	9GE-QK	4Y207-19 x
4Y9GE-QK8-20 x		1-1/4	20	72	114.3	118.4	63.5	82.6	44.5	22.4		25.4	17.5	47.8	46.7		4Y207-20 x
4Y9GE-QK8-21 x		1-5/16	21														4Y207-21 x
4Y9GE-QK8-22 x		1-3/8	22														4Y207-22 x
4Y9GE-QK8-35M x	35																4Y207-35M x
4Y9GE-QK8-23 x		1-7/16	23														4Y207-23 x
4Y9GF-QK8-23 x		1-7/16	23	3.150	4.75	4.75	2.56	3.5	1.88	0.94	1/2-13	1.19	0.75	2.13	2.08	9GF-QK	4Y208-23 x
4Y9GF-QK8-24 x		1-1/2	24	80	120.7	120.7	65.0	88.9	47.8	23.9		30.2	19.1	54.1	52.8		4Y208-24 x
4Y9GF-QK8-40M x	40																4Y208-40M x

QuiKlean® housing with integral standoff is 5/8" above the base of standard units

X indicates a 2-letter designation for lube & seals
G = food grade grease
F = food grade EPL
Other alpha - refer to page 3
X = standard configuration
O = open (no seal or flinger)
Others - refer to page 3
Example: GX = food grade grease with standard seals & flingers

Stainless Ball Solution® Two-Bolt Flange (QuiKlean®) with 5/8" Stand-off

CLASSIC or VALUE

Set screw locking stainless ball bearing Series "4Y"
Standard two-bolt pattern Series "2"
Stainless housing Series "A"
5/8" stand-off above base "QK"



More Sizes / Styles
Inserts pgs F-5 to F-9
Eccentric inserts in SS or KG: pgs F-10 to F-34
QuiKlean® eccentric: pgs F-34 to F-47
Set screw inserts in SS or KG: pgs F-48 to F-72
QuiKlean® set screw: pgs F-72 to F-85

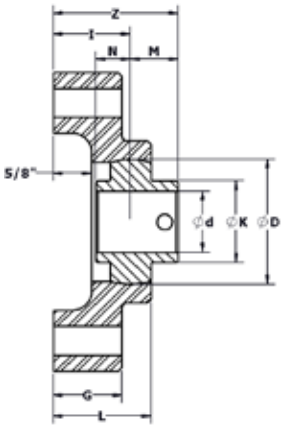

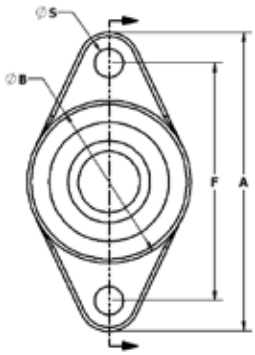

Stainless Housing

"x" indicates a 2-letter designation referring to lube & seals

MOUNTED BEARING PART NUMBER	d			Sphere OD size						Sph depth	Bolt size	Brg c/l to front	Brg c/l to back	Overall LTB of brg + hs (I+M)	Brg collar size	Housing PN	Ball bearing PN
	mm	in	16th	D	A	B	E	G	L	I	S	M	N	Z	K		SETSCREW
4Y2AA-QK8-12M x	12			1.575	3.88	2.15	3	1.06	1.47	1.15	3/8"	0.61	0.41	1.76	0.97	2AA-QK	4Y203-12M x
4Y2AA-QK8-12M x		1/2	8	40	98.6	54.6	76.2	27.0	37.3	29.2		15.5	10.4	44.7	24.6		4Y203-08 x
4Y2AA-QK8-12M x		9/16	9														4Y203-09 x
4Y2AA-QK8-12M x	15																4Y203-15M x
4Y2AA-QK8-12M x		5/8	10														4Y203-10 x
4Y2AA-QK8-12M x	17																4Y203-17M x
4Y2AA-QK8-12M x	12			1.850	4.41	2.42	3.53	1.06	1.58	1.22	3/8"	0.72	0.5	1.94	1.14	2AB-QK	4Y204-12M x
4Y2AA-QK8-12M x		1/2	8	47	112.0	61.5	89.7	27.0	40.1	31.0		18.3	12.7	49.3	29.0		4Y204-08 x
4Y2AA-QK8-12M x	15																4Y204-15M x
4Y2AA-QK8-12M x		5/8	10														4Y204-10 x
4Y2AA-QK8-12M x	17																4Y204-17M x
4Y2AA-QK8-12M x		11/16	11														4Y204-11 x
4Y2AA-QK8-12M x		3/4	12														4Y204-12 x
4Y2AA-QK8-12M x	20																4Y204-20M x
4Y2AA-QK8-12M x		3/4	12	2.047	4.89	2.66	3.89	1.13	1.6	1.16	7/16"	0.78	0.56	1.94	1.34	2AC-QK	4Y205-12 x
4Y2AA-QK8-12M x		7/8	14	52	124.2	67.6	98.8	28.6	40.6	29.5		19.8	14.2	49.3	34.0		4Y205-14 x
4Y2AA-QK8-12M x		15/16	15														4Y205-15 x
4Y2AA-QK8-12M x	25																4Y205-25M x
4Y2AA-QK8-12M x		1	16														4Y205-16 x
4Y2AA-QK8-12M x		1	16	2.441	5.69	3.12	4.6	1.13	1.69	1.28	7/16"	0.87	0.63	2.15	1.59	2AD-QK	4Y206-16 x
4Y2AA-QK8-12M x		1-1/16	17	62	144.5	79.2	116.8	28.6	42.9	32.5		22.1	16.0	54.6	40.4		4Y206-17 x
4Y2AA-QK8-12M x		1-1/8	18														4Y206-18 x
4Y2AA-QK8-12M x	30																4Y206-30M x
4Y2AA-QK8-12M x		1-3/16	19														4Y206-19 x
4Y2AA-QK8-12M x		1-1/4	20														4Y206-20 x
4Y2AA-QK8-12M x		1-3/16	19	2.835	6.25	3.62	5.12	1.19	1.85	1.42	1/2"	1	0.69	2.42	1.84	2AE-QK	4Y207-19 x
4Y2AA-QK8-12M x		1-1/4	20	72	158.8	91.9	130.0	30.2	47.0	36.1		25.4	17.5	61.5	46.7		4Y207-20 x
4Y2AA-QK8-12M x		1-5/16	21														4Y207-21 x
4Y2AA-QK8-12M x		1-3/8	22														4Y207-22 x
4Y2AA-QK8-12M x	35																4Y207-35M x
4Y2AA-QK8-12M x		1-7/16	23														4Y207-23 x
4Y2AA-QK8-12M x		1-7/16	23	3.150	6.78	4	5.66	1.19	1.87	1.39	1/2"	1.19	0.75	2.58	2.08	2AF-QK	4Y208-23 x
4Y2AA-QK8-12M x		1-1/2	24	80	172.2	101.6	143.8	30.2	47.5	35.3		30.2	19.1	65.5	52.8		4Y208-24 x
4Y2AA-QK8-12M x	40																4Y208-40M x

QuiKlean® housing with integral standoff is 5/8" above the base of standard units

X indicates a 2-letter designation for lube & seals
G = food grade grease
F = food grade EPL
Other alpha - refer to page 3
X = standard configuration
O = open (no seal or flinger)
Others - refer to page 3
Example: GX = food grade grease with standard seals & flingers

Stainless Ball Solution® Two-Bolt Flange (QuiKlean®) with 5/8" Stand-off

CLASSIC or VALUE

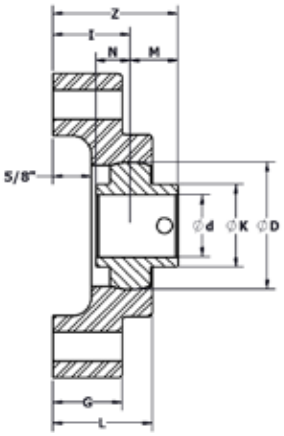

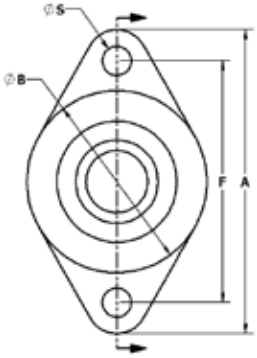

Polymer Housing

Set screw locking stainless ball bearing Series "4Y"
Standard two-bolt pattern Series "2"
Polymer housing Series "G"
5/8" stand-off above base "QK"



More Sizes / Styles
Inserts pgs F-5 to F-9
Eccentric inserts in SS or KG: pgs F-10 to F-34
QuiKlean® eccentric: pgs F-34 to F-47
Set screw inserts in SS or KG: pgs F-48 to F-72
QuiKlean® set screw: pgs F-72 to F-85

"x" indicates a 2-letter designation referring to lube & seals

MOUNTED BEARING PART NUMBER	d			Sphere OD size						Sph depth	Bolt size	Brg c/l to front	Brg c/l to back	Overall LTB of brg (I+M)	Brg collar size	Housing PN	Ball bearing PN
	mm	in	16th	D	A	B	F	G	L	I	S	M	N	Z	K		SETSCREW
4Y2GA-QK8-12M x	12			1.575	3.88	2.15	3	1.06	1.47	1.15	3/8"	0.61	0.41	1.76	0.97	2GA-QK	4Y203-12M x
4Y2GA-QK8-08 x		1/2	8	40	98.6	54.6	76.2	26.9	37.3	29.2		15.5	10.4	44.7	24.6		4Y203-08 x
4Y2GA-QK8-09 x		9/16	9														4Y203-09 x
4Y2GA-QK8-15M x	15																4Y203-15M x
4Y2GA-QK8-10 x		5/8	10														4Y203-10 x
4Y2GA-QK8-17M x	17																4Y203-17M x
4Y2GB-QK8-12M x	12			1.850	4.41	2.69	3.53	1.06	1.58	1.22	3/8"	0.72	0.5	1.94	1.14	2GB-QK	4Y204-12M x
4Y2GB-QK8-08 x		1/2	8	47	112.0	68.3	89.7	26.9	40.1	31.0		18.3	12.7	49.3	29.0		4Y204-08 x
4Y2GB-QK8-15M x	15																4Y204-15M x
4Y2GB-QK8-10 x		5/8	10														4Y204-10 x
4Y2GB-QK8-17M x	17																4Y204-17M x
4Y2GB-QK8-11 x		11/16	11														4Y204-11 x
4Y2GB-QK8-12 x		3/4	12														4Y204-12 x
4Y2GB-QK8-20M x	20																4Y204-20M x
4Y2GC-QK8-12 x		3/4	12	2.047	4.89	2.93	3.89	1.13	1.62	1.26	7/16"	0.78	0.56	2.04	1.34	2GC-QK	4Y205-12 x
4Y2GC-QK8-14 x		7/8	14	52	124.2	74.4	98.8	28.6	41.0	32.0		19.8	14.2	51.8	34.0		4Y205-14 x
4Y2GC-QK8-15 x		15/16	15														4Y205-15 x
4Y2GC-QK8-25M x	25																4Y205-25M x
4Y2GC-QK8-16 x		1	16														4Y205-16 x
4Y2GD-QK8-16 x		1	16	2.441	5.59	3.625	4.59	1.13	1.69	1.28	7/16"	0.87	0.63	2.15	1.59	2GD-QK	4Y206-16 x
4Y2GD-QK8-17 x		1-1/16	17	62	142.0	92.1	116.6	28.6	42.9	32.5		22.1	16.0	54.6	40.4		4Y206-17 x
4Y2GD-QK8-18 x		1-1/8	18														4Y206-18 x
4Y2GD-QK8-30M x	30																4Y206-30M x
4Y2GD-QK8-19 x		1-3/16	19														4Y206-19 x
4Y2GD-QK8-20 x		1-1/4	20														4Y206-20 x
4Y2GE-QK8-19 x		1-3/16	19	2.835	6.25	4	5.12	1.19	1.85	1.42	1/2"	1	0.69	2.42	1.84	2GE-QK	4Y207-19 x
4Y2GE-QK8-20 x		1-1/4	20	72	158.8	101.6	130.0	30.2	47.0	36.1		25.4	17.5	61.5	46.7		4Y207-20 x
4Y2GE-QK8-21 x		1-5/16	21														4Y207-21 x
4Y2GE-QK8-22 x		1-3/8	22														4Y207-22 x
4Y2GE-QK8-35M x	35																4Y207-35M x
4Y2GE-QK8-23 x		1-7/16	23														4Y207-23 x
4Y2GF-QK8-23 x		1-7/16	23	3.150	6.78	4.56	5.66	1.19	1.87	1.39	1/2"	1.19	0.75	2.58	2.08	2GF-QK	4Y208-23 x
4Y2GF-QK8-24 x		1-1/2	24	80	172.2	115.8	143.8	30.2	47.5	35.3		30.2	19.1	65.5	52.8		4Y208-24 x
4Y2GF-QK8-40M x	40																4Y208-40M x

QuiKlean® housing with integral standoff is 5/8" above the base of standard units

X indicates a 2-letter designation for lube & seals
G = food grade grease
F = food grade EPL
Other alpha - refer to page 3
X = standard configuration
O = open (no seal or flinger)
Others - refer to page 3
Example: GX = food grade grease with standard seals & flingers

Stainless Ball Solution®
Small Two-Bolt Flange
(QuiKlean®) with 5/8" Stand-off

CLASSIC or VALUE

Set screw locking stainless ball bearing Series "4Y"
Small two-bolt pattern Series "6"
Stainless housing Series "A"
5/8" stand-off above base "QK"

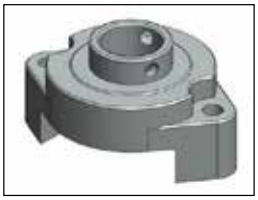

More Sizes / Styles
Inserts pgs F-5 to F-9
Eccentric inserts in SS or KG: pgs F-10 to F-34
QuiKlean® eccentric: pgs F-34 to F-47
Set screw inserts in SS or KG: pgs F-48 to F-72
QuiKlean® set screw: pgs F-72 to F-85

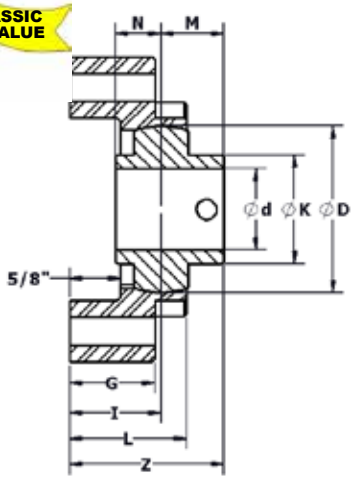

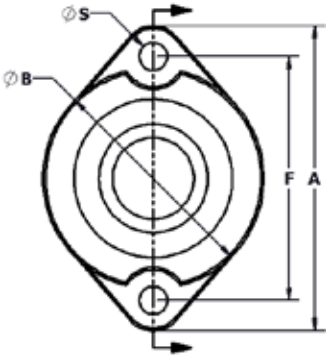

Stainless Housing

"x" indicates a 2-letter designation referring to lube & seals

MOUNTED BEARING PART NUMBER	d			Sphere OD size						Sph depth	Bolt size	Brg c/l to front	Brg c/l to back	Overall LTB of brg + hsg (I+M)	Brg collar size	Housing PN	Ball bearing PN
	mm	in	16th	D	A	B	F	G	L	I	S	M	N	Z	K		SETSCREW
4Y6AE-QK8-19 x		1-3/16	19	2.835	4.94	3.5	3.94	1.13	1.58	1.19	3/8	1	0.69	2.19	1.84	6AE-QK	4Y207-19 x
4Y6AE-QK8-20 x		1-1/4	20	72	125.5	88.9	100.1	28.7	40.1	30.2		25.4	17.5	55.6	46.7		4Y207-20 x
4Y6AE-QK8-21 x		1-5/16	21														4Y207-21 x
4Y6AE-QK8-22 x		1-3/8	22														4Y207-22 x
4Y6AE-QK8-35M x	35																4Y207-35M x
4Y6AE-QK8-23 x		1-7/16	23														4Y207-23 x

Stainless Ball Solution®
Small Two-Bolt Flange
(QuiKlean®) with 5/8" Stand-off

CLASSIC or VALUE

Set screw locking stainless ball bearing Series "4Y"
Small two-bolt pattern Series "6"
Polymer housing Series "G"
5/8" stand-off above base "QK"



More Sizes / Styles
Inserts pgs F-5 to F-9
Eccentric inserts in SS or KG: pgs F-10 to F-34
QuiKlean® eccentric: pgs F-34 to F-47
Set screw inserts in SS or KG: pgs F-48 to F-72
QuiKlean® set screw: pgs F-72 to F-85

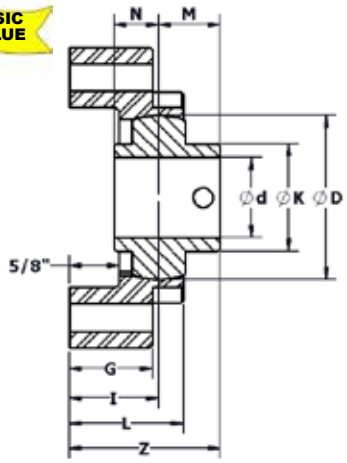

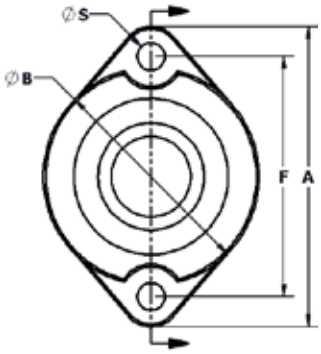

Polymer Housing

"x" indicates a 2-letter designation referring to lube & seals

MOUNTED BEARING PART NUMBER	d			Sphere OD size						Sph depth	Bolt size	Brg c/l to front	Brg c/l to back	Overall LTB of brg + hsg (I+M)	Brg collar size	Housing PN	Ball bearing PN
	mm	in	16th	D	A	B	F	G	L	I	S	M	N	Z	K		SETSCREW
4Y6GE-QK8-19 x		1-3/16	19	2.835	4.94	3.5	3.94	1.13	1.58	1.19	3/8	1	0.69	2.19	1.84	6GE-QK	4Y207-19 x
4Y6GE-QK8-20 x		1-1/4	20	72	125.5	88.9	100.1	28.7	40.1	30.2		25.4	17.5	55.6	46.7		4Y207-20 x
4Y6GE-QK8-21 x		1-5/16	21														4Y207-21 x
4Y6GE-QK8-22 x		1-3/8	22														4Y207-22 x
4Y6GE-QK8-35M x	35																4Y207-35M x
4Y6GE-QK8-23 x		1-7/16	23														4Y207-23 x

QuiKlean® housing with integral standoff is 5/8" above the base of standard units

X indicates a 2-letter designation for lube & seals
G = food grade grease
F = food grade EPL
Other alpha - refer to page 3
X = standard configuration
O = open (no seal or flinger)
Others - refer to page 3
Example: GX = food grade grease with standard seals & flingers

SET SCREW BALL BEARINGS

CONTINUE ON PAGE 82

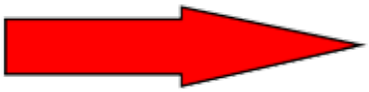

Stainless Ball Solution® Three-Bolt Flange (QuiKlean®) with 5/8" Stand-off

CLASSIC or VALUE

Set screw locking stainless ball bearing Series "4Y"
Standard three-bolt pattern Series "3"
Stainless housing Series "A"
5/8" stand-off above base "QK"



More Sizes / Styles
Inserts pgs F-5 to F-9
Eccentric inserts in SS or KG: pgs F-10 to F-34
QuiKlean® eccentric: pgs F-34 to F-47
Set screw inserts in SS or KG: pgs F-48 to F-72
QuiKlean® set screw: pgs F-72 to F-85

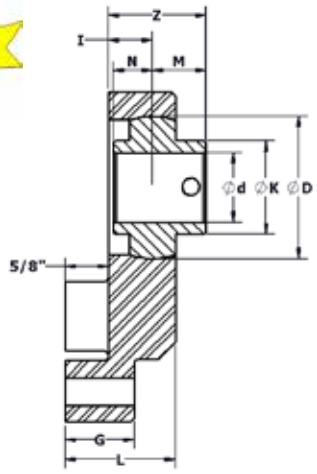

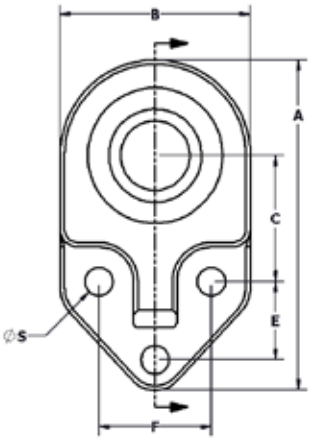

Stainless Housing

"x" indicates a 2-letter designation referring to lube & seals

MOUNTED BEARING PART NUMBER	d			Sphere OD size									Bolt size	Brg c/l to front	Brg c/l to back	Overall LTB of brg (I+M)	Brg collar size	Housing PN	Ball bearing PN
	mm	in	16th	D	A	B	C	E	F	G	L	I	S	M	N	Z	K		SETSCREW
4Y3AE-QK8-19 x		1-3/16	19	2.835	6	3.63	2.38	1.25	2	1.125	1.85	0.79	1/2"	1	0.69	1.79	1.84	3AE-QK	4Y207-19 x
4Y3AE-QK8-20 x		1-1/4	20	72	152.4	92.2	60.5	31.8	50.8	28.6	46.9	20.1		25.4	17.5	45.5	46.7		4Y207-20 x
4Y3AE-QK8-21 x		1-5/16	21																4Y207-21 x
4Y3AE-QK8-22 x		1-3/8	22																4Y207-22 x
4Y3AE-QK8-35M x	35																		4Y207-35M x
4Y3AE-QK8-23 x		1-7/16	23																4Y207-23 x

QuiKlean® housing with integral standoff is 5/8" above the base of standard units

X indicates a 2-letter designation for lube & seals
G = food grade grease
F = food grade EPL
Other alpha - refer to page 3
X = standard configuration
O = open (no seal or flinger)
Others - refer to page 3
Example: GX = food grade grease with standard seals & flingers

Stainless Ball Solution® Three-Bolt Flange (QuiKlean®) with 5/8" Stand-off

CLASSIC or VALUE

Set screw locking stainless ball bearing Series "4Y"
Standard three-bolt pattern Series "3"
Polymer housing Series "G"
5/8" stand-off above base "QK"



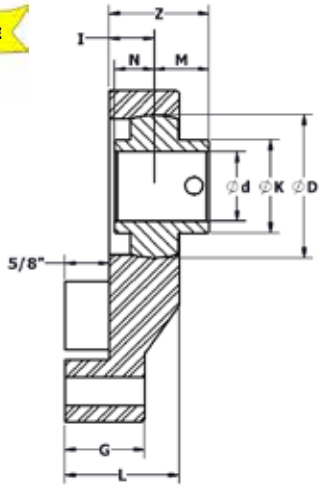

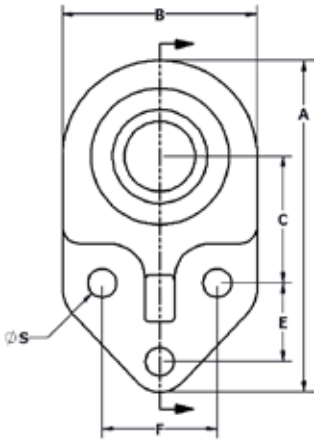

More Sizes / Styles
Inserts pgs F-5 to F-9
Eccentric inserts in SS or KG: pgs F-10 to F-34
QuiKlean® eccentric: pgs F-34 to F-47
Set screw inserts in SS or KG: pgs F-48 to F-72
QuiKlean® set screw: pgs F-72 to F-85

"x" indicates a 2-letter designation referring to lube & seals

Polymer Housing

MOUNTED BEARING PART NUMBER	d			Sphere OD size									Bolt size	Brg c/l to front	Brg c/l to back	Overall LTB of brg (I+M)	Brg collar size	Housing PN	Ball bearing PN
	mm	in	16th	D	A	B	C	E	F	G	L	I	S	M	N	Z	K		SETSCREW
4Y3GA-QK8-12M x	12			1.575	3.66	2.19	1.38	0.81	1.25	1.06	1.47	0.53	5/16"	0.61	0.41	1.14	0.97	3GA-QK	4Y203-12M x
4Y3GA-QK8-08 x		1/2	8	40	93.0	55.6	35.1	20.6	31.8	26.9	37.3	13.5		15.5	10.4	29.0	24.6		4Y203-08 x
4Y3GA-QK8-09 x		9/16	9																4Y203-09 x
4Y3GA-QK8-15M x	15																		4Y203-15M x
4Y3GA-QK8-10 x		5/8	10																4Y203-10 x
4Y3GA-QK8-17M x	17																		4Y203-17M x
4Y3GB-QK8-12M x	12			1.850	4.34	2.56	1.69	0.88	1.5	1.06	1.58	0.59	3/8"	0.72	0.5	1.31	1.14	3GB-QK	4Y204-12M x
4Y3GB-QK8-08 x		1/2	8	47	110.2	65.0	42.9	22.4	38.1	26.9	40.1	15.0		18.3	12.7	33.3	29.0		4Y204-08 x
4Y3GB-QK8-15M x	15																		4Y204-15M x
4Y3GB-QK8-10 x		5/8	10																4Y204-10 x
4Y3GB-QK8-17M x	17																		4Y204-17M x
4Y3GB-QK8-11 x		11/16	11																4Y204-11 x
4Y3GB-QK8-12 x		3/4	12																4Y204-12 x
4Y3GB-QK8-20M x	20																		4Y204-20M x
4Y3GC-QK8-12 x		3/4	12	2.047	4.75	2.75	1.81	1.13	1.63	1.13	1.615	0.64	3/8"	0.78	0.56	1.42	1.34	3GC-QK	4Y205-12 x
4Y3GC-QK8-14 x		7/8	14	52	120.7	69.9	46.0	28.6	41.4	28.6	41.0	16.1		19.8	14.2	35.9	34.0		4Y205-14 x
4Y3GC-QK8-15 x		15/16	15																4Y205-15 x
4Y3GC-QK8-25M x	25																		4Y205-25M x
4Y3GC-QK8-16 x		1	16																4Y205-16 x
4Y3GD-QK8-16 x		1	16	2.441	5.44	3.25	2.06	1.25	1.88	1.125	1.69	0.66	3/8"	0.87	0.63	1.53	1.59	3GD-QK	4Y206-16 x
4Y3GD-QK8-17 x		1-1/16	17	62	138.2	82.6	52.3	31.8	47.8	28.6	42.9	16.8		22.1	16.0	38.9	40.4		4Y206-17 x
4Y3GD-QK8-18 x		1-1/8	18																4Y206-18 x
4Y3GD-QK8-30M x	30																		4Y206-30M x
4Y3GD-QK8-19 x		1-3/16	19																4Y206-19 x
4Y3GD-QK8-20 x		1-1/4	20																4Y206-20 x
4Y3GE-QK8-19 x		1-3/16	19	2.835	6.19	3.81	2.38	1.25	2	1.19	1.85	0.79	1/2"	1	0.69	1.79	1.84	3GE-QK	4Y207-19 x
4Y3GE-QK8-20 x		1-1/4	20	72	157.2	96.8	60.5	31.8	50.8	30.2	47.0	20.1		25.4	17.5	45.5	46.7		4Y207-20 x
4Y3GE-QK8-21 x		1-5/16	21																4Y207-21 x
4Y3GE-QK8-22 x		1-3/8	22																4Y207-22 x
4Y3GE-QK8-35M x	35																		4Y207-35M x
4Y3GE-QK8-23 x		1-7/16	23																4Y207-23 x
4Y3GF-QK8-23 x		1-7/16	23	3.150	6.72	4.25	2.56	1.38	2.25	1.19	1.86	0.77	1/2"	1.19	0.75	1.96	2.08	3GF-QK	4Y208-23 x
4Y3GF-QK8-24 x		1-1/2	24	80	170.7	108.0	65.0	35.1	57.2	30.2	47.2	19.6		30.2	19.1	49.8	52.8		4Y208-24 x
4Y3GF-QK8-40M x	40																		4Y208-40M x

QuiKlean® housing with integral standoff is 5/8" above the base of standard units

X indicates a 2-letter designation for lube & seals
G = food grade grease
F = food grade EPL
Other alpha - refer to page 3
X = standard configuration
O = open (no seal or flinger)
Others - refer to page 3
Example: GX = food grade grease with standard seals & flingers

Stainless Ball Solution® Four-Bolt Flange (QuiKlean®) with 5/8" Stand-off

CLASSIC or VALUE

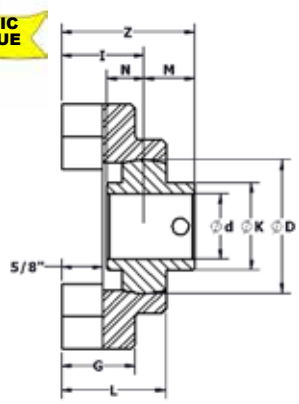

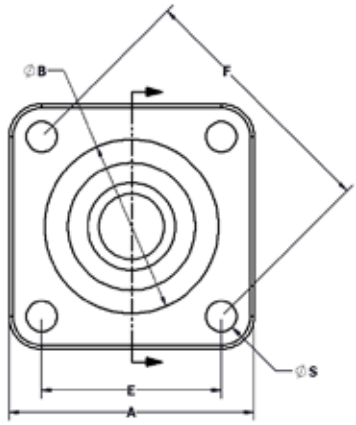

Stainless Housing

Set screw locking stainless ball bearing Series "4Y"
Standard four-bolt pattern Series "4"
Stainless housing Series "A"
5/8" stand-off above base "QK"



More Sizes / Styles
Inserts pgs F-5 to F-9
Eccentric inserts in SS or KG: pgs F-10 to F-34
QuiKlean® eccentric: pgs F-34 to F-47
Set screw inserts in SS or KG: pgs F-48 to F-72
QuiKlean® set screw: pgs F-72 to F-85

"x" indicates a 2-letter designation referring to lube & seals

MOUNTED BEARING PART NUMBER	d			Sphere OD size									Brg c/l to front	Brg c/l to back	Overall LTB of brg (I+M)	Brg collar size	Housing PN	Ball bearing PN
	mm	in	16th	D	A	B	E	F	G	L	I	S	M	N	Z	K		SETSCREW
4Y4AB-QK8-12M x	12			1.850	3.37	2.42	2.5	3.54	1.06	1.58	1.22	3/8"	0.72	0.5	1.94	1.14	4AB-QK	4Y204-12M x
4Y4AB-QK8-08 x		1/2	8	47	85.6	61.5	63.5	89.9	26.9	40.1	31.0		18.3	12.7	49.3	29.0		4Y204-08 x
4Y4AB-QK8-15M x	15																	4Y204-15M x
4Y4AB-QK8-10 x		5/8	10															4Y204-10 x
4Y4AB-QK8-17M x	17																	4Y204-17M x
4Y4AB-QK8-11 x		11/16	11															4Y204-11 x
4Y4AB-QK8-12 x		3/4	12															4Y204-12 x
4Y4AB-QK8-20M x	20																	4Y204-20M x
4Y4AC-QK8-12 x		3/4	12	2.047	3.75	2.66	2.75	3.89	1.13	1.6	1.26	7/16"	0.78	0.56	2.04	1.34	4AC-QK	4Y205-12 x
4Y4AC-QK8-14 x		7/8	14	52	95.3	67.6	69.9	98.8	28.7	40.6	32.0		19.8	14.2	51.8	34.0		4Y205-14 x
4Y4AC-QK8-15 x		15/16	15															4Y205-15 x
4Y4AC-QK8-25M x	25																	4Y205-25M x
4Y4AC-QK8-16 x		1	16															4Y205-16 x
4Y4AD-QK8-16 x		1	16	2.441	4.25	3.12	3.25	4.59	1.13	1.69	1.28	7/16"	0.87	0.63	2.15	1.59	4AD-QK	4Y206-16 x
4Y4AD-QK8-17 x		1-1/16	17	62	108.0	79.2	82.6	116.6	28.7	42.9	32.5		22.1	16.0	54.6	40.4		4Y206-17 x
4Y4AD-QK8-18 x		1-1/8	18															4Y206-18 x
4Y4AD-QK8-30M x	30																	4Y206-30M x
4Y4AD-QK8-19 x		1-3/16	19															4Y206-19 x
4Y4AD-QK8-20 x		1-1/4	20															4Y206-20 x
4Y4AE-QK8-19 x		1-3/16	19	2.835	4.75	3.62	3.62	5.13	1.19	1.85	1.42	1/2"	1	0.69	2.42	1.84	4AE-QK	4Y207-19 x
4Y4AE-QK8-20 x		1-1/4	20	72	120.7	91.9	91.9	130.3	30.2	47.0	36.1		25.4	17.5	61.5	46.7		4Y207-20 x
4Y4AE-QK8-21 x		1-5/16	21															4Y207-21 x
4Y4AE-QK8-22 x		1-3/8	22															4Y207-22 x
4Y4AE-QK8-35M x	35																	4Y207-35M x
4Y4AE-QK8-23 x		1-7/16	23															4Y207-23 x
4Y4AF-QK8-23 x		1-7/16	23	3.150	5.12	4	4	5.66	1.19	1.87	1.39	1/2"	1.19	0.75	2.58	2.08	4AF-QK	4Y208-23 x
4Y4AF-QK8-24 x		1-1/2	24	80	130.0	101.6	101.6	143.8	30.2	47.5	35.3		30.2	19.1	65.5	52.8		4Y208-24 x
4Y4AF-QK8-40M x	40																	4Y208-40M x

QuiKlean® housing with integral standoff is 5/8" above the base of standard units

X indicates a 2-letter designation for lube & seals
G = food grade grease
F = food grade EPL
Other alpha - refer to page 3
X = standard configuration
O = open (no seal or flinger)
Others - refer to page 3
Example: GX = food grade grease with standard seals & flingers

Stainless Ball Solution®
Four-Bolt Flange
(QuiKlean®) with 5/8" Stand-off

CLASSIC or VALUE

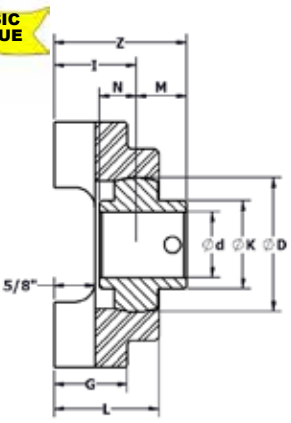

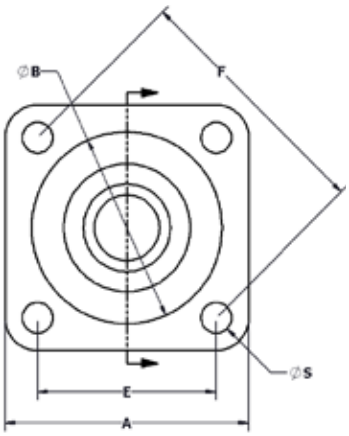

Polymer Housing

Set screw locking stainless ball bearing Series "4Y"
Standard four-bolt pattern Series "4"
Polymer housing Series "G"
5/8" stand-off above base "QK"



More Sizes / Styles
Inserts pgs F-5 to F-9
Eccentric inserts in SS or KG: pgs F-10 to F-34
QuiKlean® eccentric: pgs F-34 to F-47
Set screw inserts in SS or KG: pgs F-48 to F-72
QuiKlean® set screw: pgs F-72 to F-85

"x" indicates a 2-letter designation referring to lube & seals

MOUNTED BEARING PART NUMBER	d			Sphere OD size								Bolt size	Brg c/l to front	Brg c/l to back	Overall LTB of brg (I+M)	Brg collar size	Housing PN	Ball bearing PN
	mm	in	16th	D	A	B	E	F	G	L	I	S	M	N	Z	K		SETSCREW
4Y4GA-QK8-12M x	12			1.575	3	2.15	2.13	3.01	1.06	1.47	1.15	3/8"	0.61	0.41	1.76	0.97	4GA-QK	4Y203-12M x
4Y4GA-QK8-08 x		1/2	8	40	76.2	54.6	54.1	76.5	26.9	37.3	29.2		15.5	10.4	44.7	24.6		4Y203-08 x
4Y4GA-QK8-09 x		9/16	9															4Y203-09 x
4Y4GA-QK8-15M x	15																	4Y203-15M x
4Y4GA-QK8-10 x		5/8	10															4Y203-10 x
4Y4GA-QK8-17M x	17																	4Y203-17M x
4Y4GB-QK8-12M x	12			1.850	3.38	2.69	2.5	3.54	1.06	1.57	1.22	3/8"	0.72	0.5	1.94	1.14	4GB-QK	4Y204-12M x
4Y4GB-QK8-08 x		1/2	8	47	85.9	68.3	63.5	89.9	26.9	39.9	31.0		18.3	12.7	49.3	29.0		4Y204-08 x
4Y4GB-QK8-15M x	15																	4Y204-15M x
4Y4GB-QK8-10 x		5/8	10															4Y204-10 x
4Y4GB-QK8-17M x	17																	4Y204-17M x
4Y4GB-QK8-11 x		11/16	11															4Y204-11 x
4Y4GB-QK8-12 x		3/4	12															4Y204-12 x
4Y4GB-QK8-20M x	20																	4Y204-20M x
4Y4GC-QK8-12 x		3/4	12	2.047	3.75	2.93	2.75	3.89	1.13	1.62	1.26	7/16"	0.78	0.56	2.04	1.34	4GC-QK	4Y205-12 x
4Y4GC-QK8-14 x		7/8	14	52	95.3	74.4	69.9	98.8	28.6	41.1	32.0		19.8	14.2	51.8	34.0		4Y205-14 x
4Y4GC-QK8-15 x		15/16	15															4Y205-15 x
4Y4GC-QK8-25M x	25																	4Y205-25M x
4Y4GC-QK8-16 x		1	16															4Y205-16 x
4Y4GD-QK8-16 x		1	16	2.441	4.25	3.63	3.25	4.6	1.13	1.69	1.28	7/16"	0.87	0.63	2.15	1.59	4GD-QK	4Y206-16 x
4Y4GD-QK8-17 x		1-1/16	17	62	108.0	92.2	82.6	116.8	28.6	42.9	32.5		22.1	16.0	54.6	40.4		4Y206-17 x
4Y4GD-QK8-18 x		1-1/8	18															4Y206-18 x
4Y4GD-QK8-30M x	30																	4Y206-30M x
4Y4GD-QK8-19 x		1-3/16	19															4Y206-19 x
4Y4GD-QK8-20 x		1-1/4	20															4Y206-20 x
4Y4GE-QK8-19 x		1-3/16	19	2.835	4.75	4	3.63	5.13	1.19	1.85	1.42	1/2"	1	0.69	2.42	1.84	4GE-QK	4Y207-19 x
4Y4GE-QK8-20 x		1-1/4	20	72	120.7	101.6	92.2	130.3	30.2	47.0	36.1		25.4	17.5	61.5	46.7		4Y207-20 x
4Y4GE-QK8-21 x		1-5/16	21															4Y207-21 x
4Y4GE-QK8-22 x		1-3/8	22															4Y207-22 x
4Y4GE-QK8-35M x	35																	4Y207-35M x
4Y4GE-QK8-23 x		1-7/16	23															4Y207-23 x
4Y4GF-QK8-23 x		1-7/16	23	3.150	5.13	4.56	4	5.66	1.19	1.87	1.39	1/2"	1.19	0.75	2.58	2.08	4GF-QK	4Y208-23 x
4Y4GF-QK8-24 x		1-1/2	24	80	130.3	115.8	101.6	143.8	30.2	47.5	35.3		30.2	19.1	65.5	52.8		4Y208-24 x
4Y4GF-QK8-40M x	40																	4Y208-40M x

QuiKlean® housing with integral standoff is 5/8" above the base of standard units

X indicates a 2-letter designation for lube & seals
G = food grade grease
F = food grade EPL
Other alpha - refer to page 3
X = standard configuration
O = open (no seal or flinger)
Others - refer to page 3
Example: GX = food grade grease with standard seals & flingers

ENGINEERING NOTES