**The Timken Company**
4500 Mt Pleasant St. NW
N. Canton, OH 44720
**Phone:** (234) 262-3000
**E-Mail:** CustomerCAD@timken.com • **Web site:** www.timken.com

# Timken Part Number SK-11023, Push-Type Removable Sleeve, Locknut and Lockwasher

The chart below shows dimensions for adapter assemblies and components used in the tapered bore bearings on shafts.

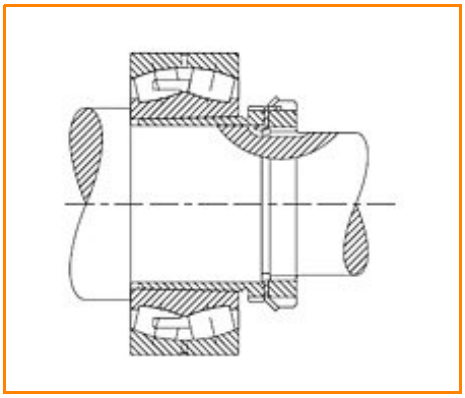

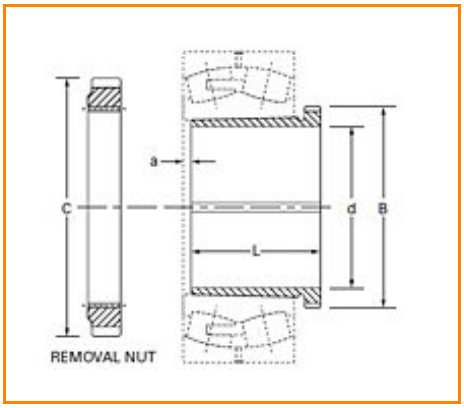


Specifications | Shaft Dimensions | Adapter Dimensions | Accessory Numbers

## Specifications

| | |
|---|---|
| **Series** | 223K |
| **Removal Nut O.D. C** | 158.75 mm<br>6.250 in |
| **Bearing Number** | 22322K |
| **Sleeve Weight** | 4.2 lb<br>1.9 Kg |

## Shaft Dimensions

| | |
|---|---|
| **Diameter d** | 100 mm<br>3.9370 in |
| **Tolerance[1]** | -0.10 mm<br>-0.004 in |

## Adapter Dimensions

| | |
|---|---|
| **Pitch Diameter B** | 119.94 mm<br>4.722 in |
| **L[2]** | 98.00 mm<br>3.8580 in |
| **a** | 4.00 mm<br>0.157 in |

## Accessory Numbers

| | |
|---|---|
| **Sleeve** | SK-11023 |
| **Locknut** | AN-20 |
| **Lockwasher and Lockplates** | W-20 |
| **Removal Nut** | ARN-22 |

[1] Tolerance range is from +0 to value listed.
[2] Tolerance -0 to + 0.4 mm (-0 to +1/64 in)