The Timken Company
4500 Mt Pleasant St. NW
N. Canton, OH 44720
Phone: (234) 262-3000
E-Mail: CustomerCAD@timken.com • **Web site:** www.timken.com

Timken Part Number SDAF 22222, Inch Straight Bore Mounting Pillow Block SDAF222 and SDAF223 Series

- Each assembly includes the housing cap and base, cap bolts, bearing, locknut and washer, stabilizing ring, and triple ring seals.
- To order pillow block housing only, use the numbers listed in the "Housing Only" column. These units include: cap, base, cap bolts, triple ring seals and stabilizing ring.
- Assembly and pillow blocks described on this page constitute fixed units.
- To order float units, specify part number plus suffix "Float" or "FL".
- If one end closed assembly is required, specify “CL”

more

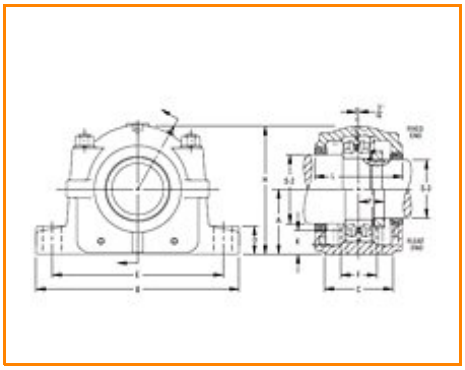

Specifications

Bearing Number	22222
Diameter S-2	4 7/8 in
Diameter S-3	4 3/16 in
A	4.9375 in
B	16.5 in
C	6.750 in
D	2.1250 in

E Max.	14.5000 in
E Min.	12.6250 in
F	4.00 in
H[1]	9.8750 in
Oil Level K	1.8750 in
L[2]	7.250 in
Y	1.9531 in
No. of Base Bolts Required	4
Bolt Hole Length	1.8125 in
Bolt Hole Width	0.875 in
Size of Base Bolts Required	0.875 in
Locknut	AN22
Lockwasher	W22
Housing Only[3]	SDAF222
Stabilizing Ring 1 Req'd[4]	SR-22-19
Triple Seal 2 Req'd at S-2	LER121
Triple Seal 2 Req'd at S-3	LER113
Assembly Weight	109.0 lb

[1] Tolerance -0 to + 0.4 mm (-0 to +1/64 in)

[2] Tolerance -0 to + 0.4 mm (-0 to +1/64 in)

[3] "Housing Only" includes: cap, base, cap bolts, triple ring seals and stabilizing ring as required. When ordering non-standard housing only specify the shaft size.

[4] Stabilizing ring is used for fixed (FX) block; do not use for float (FL) mounting.

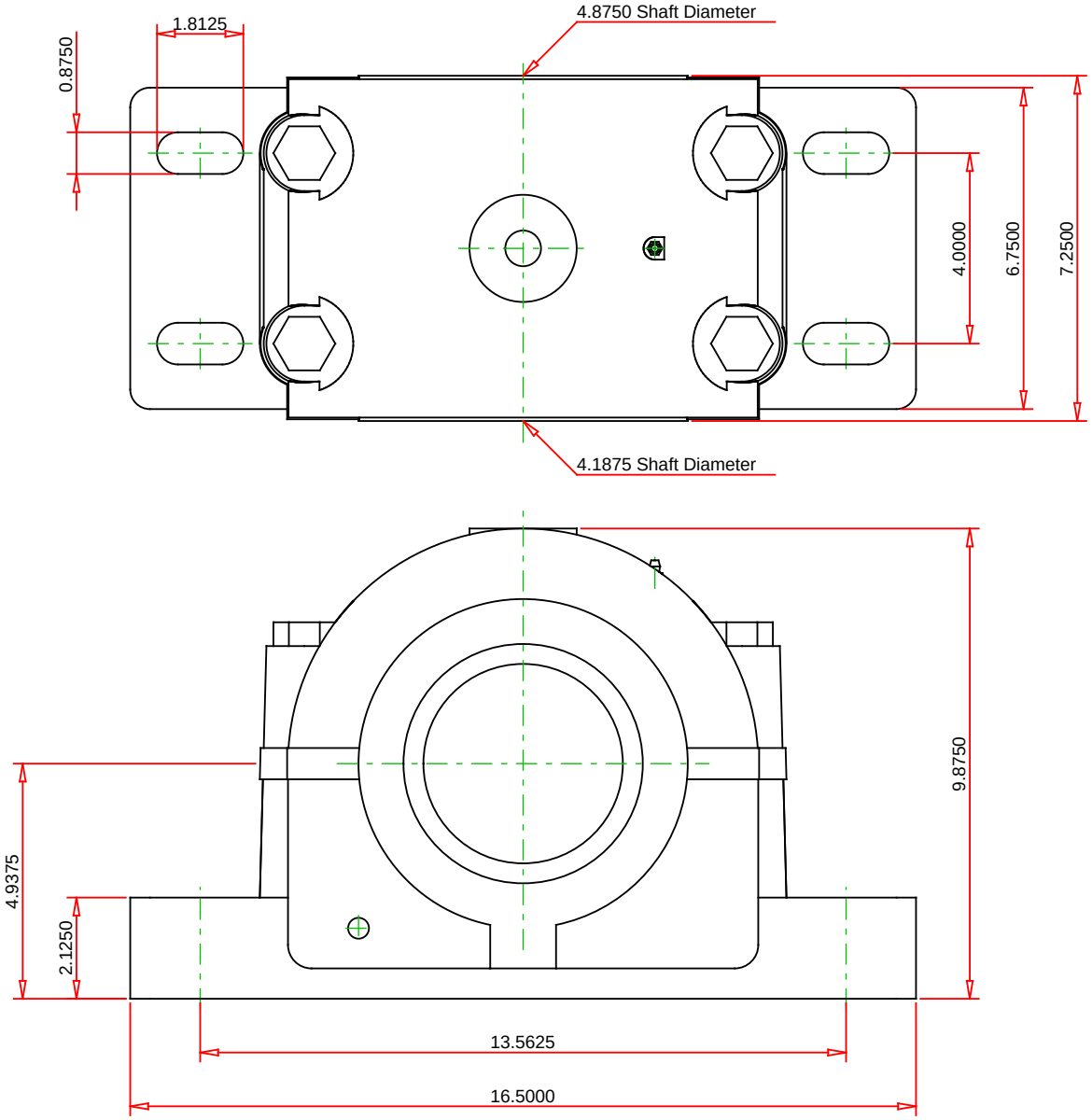

IMPERIAL UNITS

Housing	SDAF222
Bearing	22222
Triple Seal at S-2	LER121
Triple Seal at S-3	LER113
Stabilizing Ring	SR-22-19
Locknut	AN22
Lockwasher	W22
Bolt Hole Spacing Max.	14.5000
Bolt Hole Spacing Min.	12.6250

TIMKEN®

THE TIMKEN COMPANY
NORTH CANTON, OHIO USA

SDAF 22222
PILLOW BLOCK SDAF222 AND SDAF223

Every reasonable effort has been made to ensure the accuracy of the information contained in this writing, but no liability is accepted for errors, omissions or for any other reason.

FOR DISCUSSION ONLY