TIMKEN

TIMKEN® TYPE E TAPERED ROLLER BEARING HOUSED UNITS



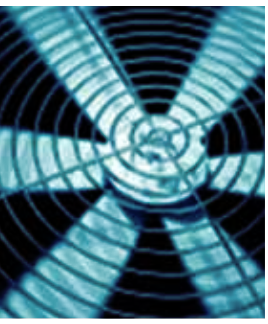



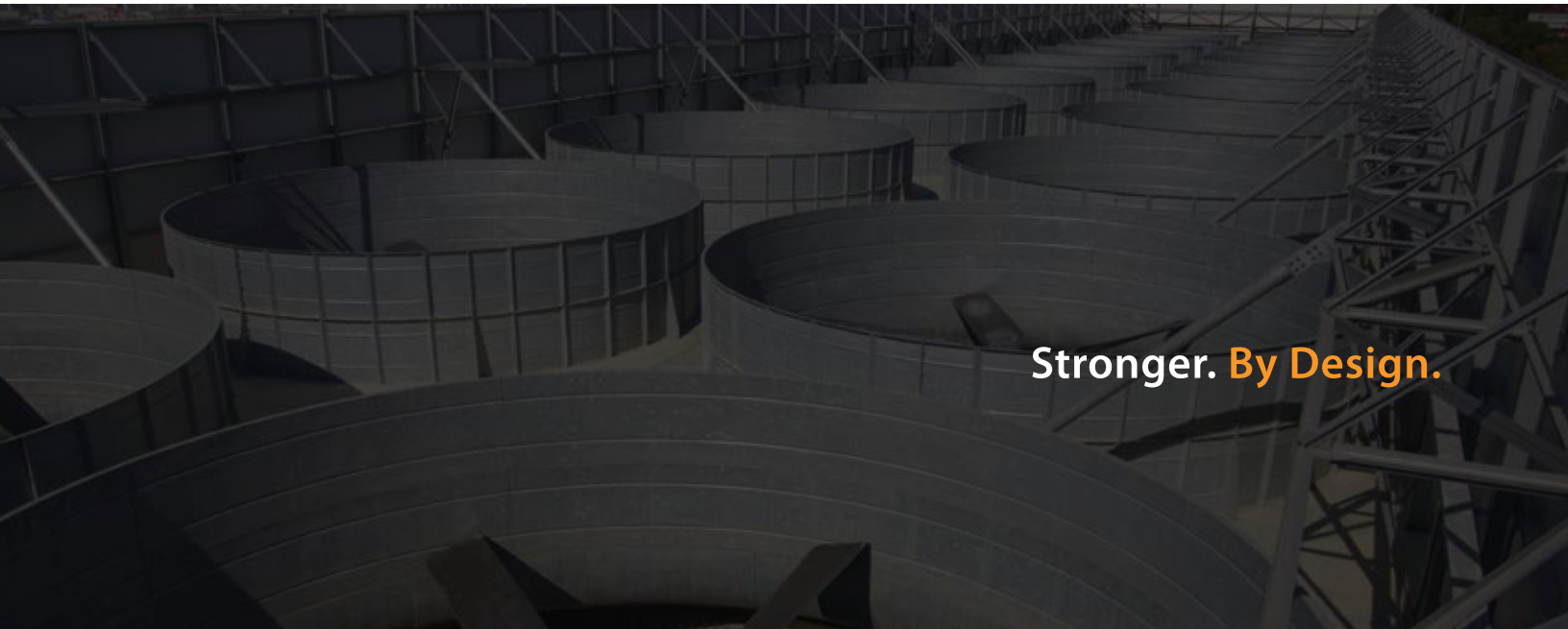

TABLE OF CONTENTS

Grow Stronger with Timken 3

Outstanding Performance from the Bearing Expert 4

Enhanced Performance, Lower Total Cost of Ownership 5

Timken® Type E Tapered Roller Bearing Housed Units 6

Benefits and Features 6

Shaft Size Ranges, Designs, Nomenclature 7

Timken® Type E Tapered Roller Bearing Housed Unit Selection 8-13

Load and Speed Rating Tables 14-15

Housing Ratings 15-16

Bearing Selection and Life Calculations 17-19

Bearing Life, Rating Life, Bearing Life Equations 17

Timken Roller Housed Unit Selection 17

Installation and Lubrication 19-20

Timken® Type E Tapered Roller Bearing Interchange 21-26

Warnings and Cautions 27

Every reasonable effort has been made to ensure the accuracy of the information contained in this writing, but no liability is accepted for errors, omissions or for any other reason.



GROW STRONGER WITH TIMKEN®

Every day, people around the world count on the streng of Timken. Our expertise in metallurgy, friction manage· ment and mechanical power transmission helps them accelerate improvements in productivity and uptime.

When you choose Timken, you receive more than high-quality products and services: You gain a worldwide team of highly trained and experienced Timken people committed to working collaboratively with you to improve your business.

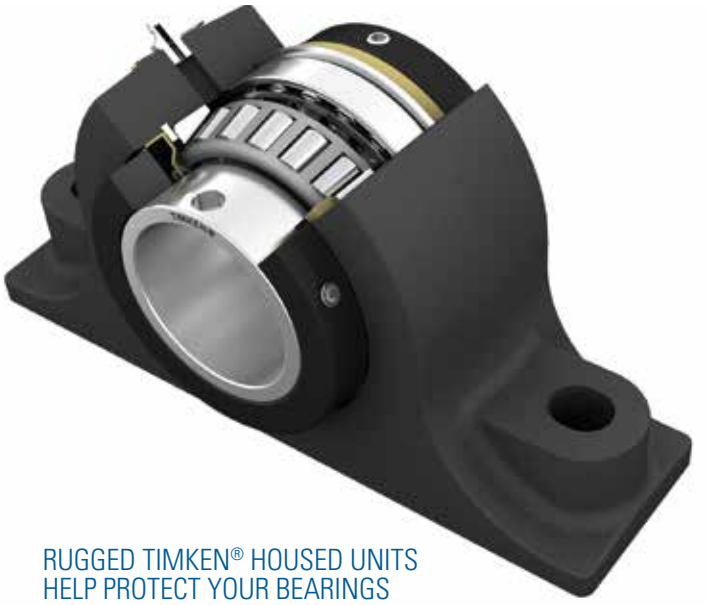

QUALITY SOLUTIONS, DEPENDABLE SERVICE

In addition to high-quality bearings and mechanical power transmission components, we provide valuable integrated products and services. For example, we offer repair services and equipment monitoring devices that can alert you to problems before they impact your uptime.

Additionally, we offer a broad selection of seals, premium lubricants, lubricators, couplings and chain to keep your operations moving smoothly.

RUGGED TIMKEN® HOUSED UNITS HELP PROTECT YOUR BEARINGS

Choose from our selection of housed units designed with ball, tapered and spherical bearings. Select enhancements like Timken® seals, lubricants and housing covers best suited for each task. Our engineers help you choose the right combination of bearings and accessories to help extend bearing life, increase uptime and reduce maintenance costs.

TIMKEN OFFERS A WIDE RANGE OF HOUSED UNITS THAT HANDLE DEMANDING INDUSTRIAL OPERATIONS.

Timken offers a full line of split- and solid-block housed units for every type of equipment. Easily interchangeable with industry standard designs, the Timken global distribution network makes it easy to get Timken products anywhere in the world – fast.



SNT PLUMMER BLOCKS

Customizable Solution, Uptime Efficiency



SAF PILLOW BLOCKS

Optimal Load Capacity, Extended Service Life



SPHERICAL ROLLER BEARING SOLID-BLOCK HOUSED UNITS

Heavy-duty Protection, High Performance



TYPE E TAPERED ROLLER BEARING HOUSED UNITS

Improved Reliability, Enhanced Performance



BALL BEARING HOUSED UNITS

Easy Installation, Flexible Options



UC-SERIES BALL BEARING HOUSED UNITS

Optimized Performance, Readily Available

ENHANCED PERFORMANCE, LOWER TOTAL COST OF OWNERSHIP

Timken® Type E housed units strengthen the performance of your equipment with industry-leading premium tapered roller bearings.

Compared to the leading competitor's bearing, our premium bearings have 12 percent higher load capacity resulting in a 47 percent increase in bearing life.



Enhanced Performance Bearings

- Significantly higher load carrying capability than industry-standard units.
- Lower internal contact stresses and frictional drag.
- Results in improved bearing performance and longer life.

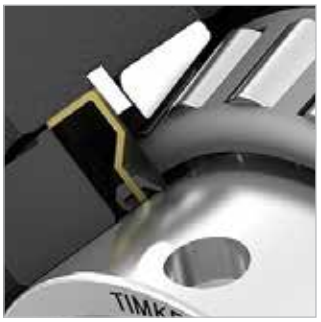

High-Performance Seals

- Help lower maintenance costs.
- Optimize lip contact to help improve grease retention.
- Drastically reduce contaminant ingress compared to the leading competitor's triple-lip seal.



Premium Timken Greases

- Extreme-pressure and anti-wear additives, as well as corrosion inhibitors.
- Operates effectively in temperatures from -40°F to +300°F (-40°C to +149°C).
- Compatible with calcium- and lithium-thickened greases.
- Available for ongoing maintenance and lubrication needs.

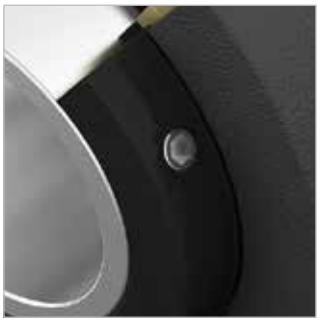

E-Coated Housings

- Housing incorporates ASTM A48 Grade 30 Cast Iron.
- Electro-deposition coating (E-coating) provides better corrosion resistance than the industry standard powder coating.

WHICH SEAL DO YOU THINK PROVIDES BETTER PROTECTION?

Timken Type E High-Performance Seal*

1. Outboard contact lip to provide initial protection from ingress.
2. Labyrinth, non-contact.
3. Inboard contact lip to provide secondary protection from ingress.

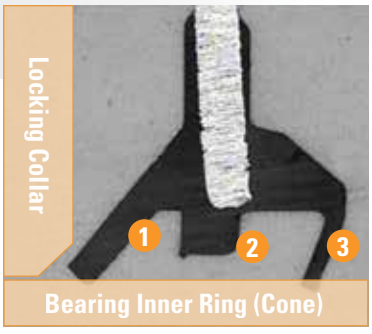

Double-lip contact optimizes sealing.

Leading Competitor Triple-Lip Seal*

1. Outboard lip contacts back of machined collar and will wear quickly, impacting effectiveness of the lip.
2. Labyrinth, non-contact.
3. Single-lip contact to protect the bearing from ingress.

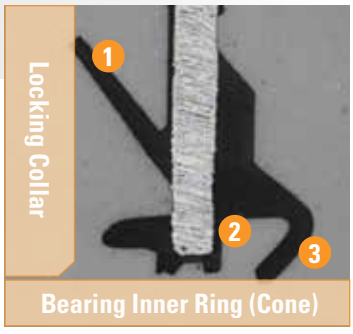

Essentially operates as a single-lip seal.

* Graphical representation of bearing inner ring and locking collar.

OUTSTANDING PERFORMANCE FROM THE BEARING EXPERT

Timken engineers have applied more than 110 years of expertise in bearing technology – and leadership in tapered roller bearings – to bring you an optimized performance tapered roller bearing housed unit. We have improved our own design to create the new standard in performance.

BEARING LIFE ANALYSIS COMPARISON

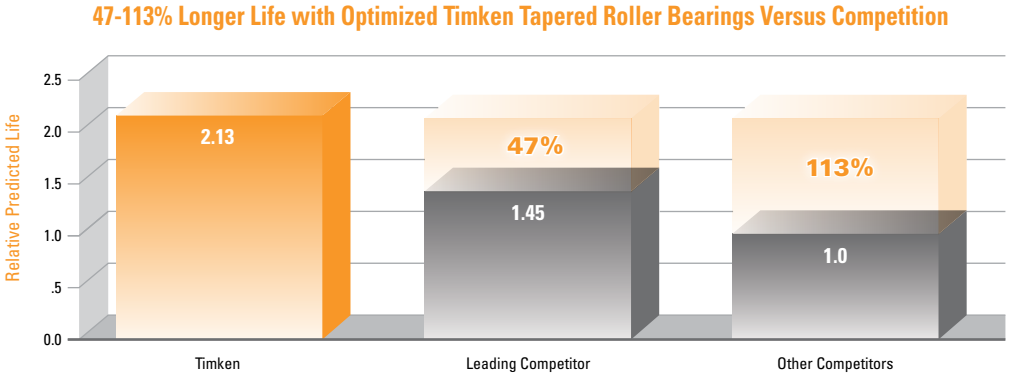

Analytical analysis of the optimized Timken bearing compared to the leading competitor's bearing and most other Type-E competitors.

Note: Life tests of Timken tapered roller bearings verified by Germanischer Lloyd.

SEAL PERFORMANCE COMPARISON

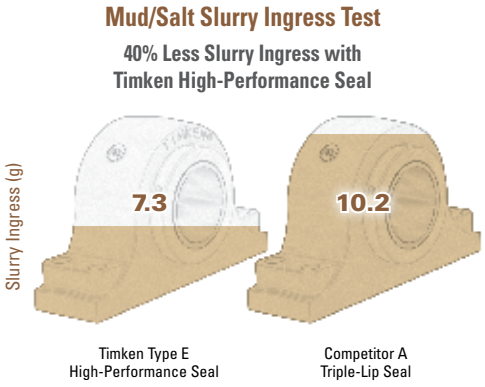

Slurry ingress test results of the high-performance Timken Type E seal compared with the triple-lip seal design of a leading competitor. Seal operating at 250 rpm in a salt and mud slurry mixture for 75 hours.

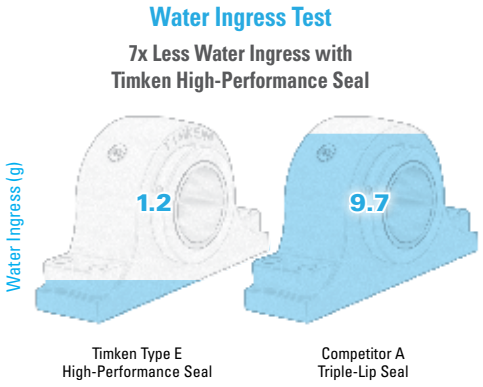

Water ingress test results of the high-performance Timken Type E seal compared with the triple-lip seal design of a leading competitor. Seal operating at 250 rpm with three gallons of water per minute directed at the shaft-seal interface for four hours.

From the bearings, seals and grease to housings and collars, our innovative design incorporates features that can help withstand some of the most demanding application conditions. This can help decrease downtime, maintenance intervals and the overall cost of ownership.

TIMKEN® TYPE E TAPERED ROLLER BEARING HOUSED UNITS

LONGER BEARING LIFE
LOWER MAINTENANCE COST
OPTIMIZED PERFORMANCE
INCREASED UPTIME



TIMKEN-DESIGNED HIGH-PERFORMANCE SEALS

BENEFITS

- Improved grease retention
- Significantly reduces contaminant ingress
- Rotating collar acts as an initial flinger
- Seven times more effective preventing water ingress compared to leading competitor
- 40 percent more effective in preventing mud and salt slurry ingress compared to leading competitor

FEATURES

- High-performance double-lip contact seal design
- Designed to optimize lip contact and minimize torque

COLLAR

BENEFITS

- All surfaces are protected for corrosion resistance
- Increased locking power
- Reduces set screw back out even in the most severe applications

FEATURES

- 65-degree set screw angle for maximum locking power and greatly reduced set screw back out
- Set screw with nylon patch
- Machined steel

PREMIUM TIMKEN® TAPERED ROLLER BEARING

BENEFITS

- 47 percent increase in bearing life over the leading competitor
- Improved lubrication performance
- Reduced internal stresses
- Enhanced performance

FEATURES

- 12 percent higher load capacity than the leading competitor
- Optimized bearing profiles
- Improved surface textures
- Super-clean, high-alloy bearing steel

HOUSING

BENEFITS

- Better corrosion resistance than black oxide or powder coating
- Designed to Type E dimensions
- Bolt holes and shaft centerline dimensions interchangeable, conforming with industry practice

FEATURES

- Electro-deposition coating (E-coat)
- Material spec: ASTM – A48 grade 30 cast iron

Timken offers Type E tapered roller bearing housed units in the widest variety of sizes and configurations in the industry.

SHAFT SIZE RANGES

Housed Unit Configuration	Inches (in)	Metric (mm)
Pillow Block: Two-Bolt Base	1 3/16 thru 3 1/2	35 thru 90
Pillow Block: Four-Bolt Base	2 1/4 thru 5	60 thru 125
Flange: Four-Bolt	1 3/16 thru 4 1/2	35 thru 115
Flange: Piloted	1 3/16 thru 5	35 thru 125
Take-Up: Wide Slot	1 3/8 thru 3	35 thru 75
Take-Up: Top Angle	1 3/4 thru 4	45 thru 100

DESIGNS



Pillow Block: Two-Bolt Base

Pillow Block: Four-Bolt Base

Flange: Four-Bolt

Flange: Piloted

Take-Up: Wide Slot

Take-Up: Top Angle

NOMENCLATURE

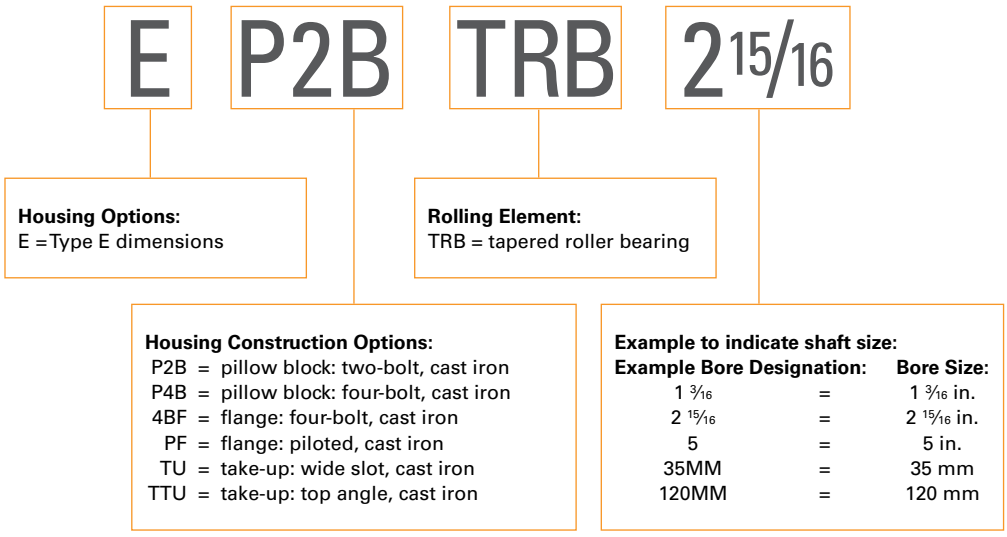

TIMKEN® TYPE E TAPERED ROLLER BEARING HOUSED UNIT SELECTION

PILLOW BLOCK: TWO-BOLT BASE

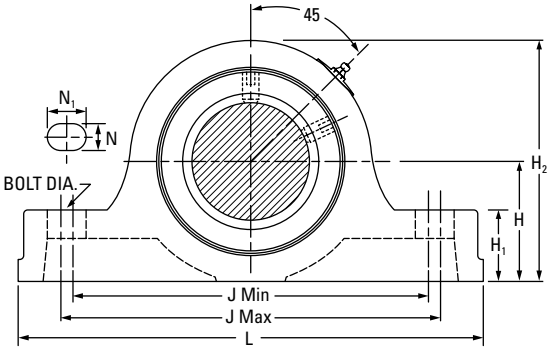

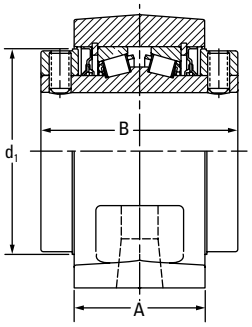

1 3⁄16 IN. TO 3 IN. SHAFT SIZE

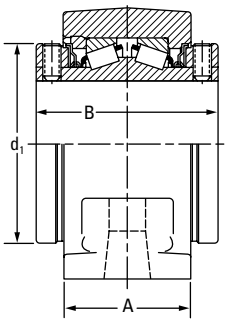

3 3⁄16 IN. TO 3 1⁄2 IN. SHAFT SIZE

Shaft Dia.	Part No.	B	L	A	J		Bolt Dia.	N	N_1	H_1	H_2	d_1	H	Approx. Wt.
					Max.	Min.								
in. **mm**		in.	in.	in.	in.	in.	in.	in.	in.	in.	in.	in.	in.	lbs.
1 3⁄16	E-P2B-TRB-1 3⁄16	2 3⁄4	6	1 7⁄8	4 13⁄16	4 3⁄4	1⁄2	9⁄16	19⁄32	7⁄8	3	2 1⁄4	1 1⁄2	4
1 1⁄4	E-P2B-TRB-1 1⁄4													
1 3⁄8	E-P2B-TRB-1 3⁄8	3	7 3⁄8	2 1⁄8	5 7⁄8	5 5⁄8	1⁄2	5⁄8	3⁄4	1 1⁄8	3 3⁄4	2 3⁄4	1 7⁄8	7
1 7⁄16	E-P2B-TRB-1 7⁄16													
35 mm	E-P2B-TRB-35MM													
1 1⁄2	E-P2B-TRB-1 1⁄2	3 3⁄8	7 7⁄8	2 3⁄8	6 3⁄8	6 1⁄8	1⁄2	5⁄8	3⁄4	1 1⁄4	4 1⁄4	3 3⁄16	2 1⁄8	10
1 5⁄8	E-P2B-TRB-1 5⁄8													
1 11⁄16	E-P2B-TRB-1 11⁄16													
40 mm	E-P2B-TRB-40MM													
1 3⁄4	E-P2B-TRB-1 3⁄4	3 1⁄2	8 7⁄8	2 1⁄2	7 1⁄8	6 7⁄8	5⁄8	3⁄4	7⁄8	1 15⁄16	4 1⁄2	3 7⁄16	2 1⁄4	12
1 7⁄8	E-P2B-TRB-1 7⁄8													
1 15⁄16	E-P2B-TRB-1 15⁄16													
2	E-P2B-TRB-2													
45 mm	E-P2B-TRB-45MM													
50 mm	E-P2B-TRB-50MM													
2 3⁄16	E-P2B-TRB-2 3⁄16	3 3⁄4	9 5⁄8	2 5⁄8	7 7⁄8	7 5⁄8	5⁄8	3⁄4	7⁄8	1 1⁄2	5	3 3⁄4	2 1⁄2	15
55 mm	E-P2B-TRB-55MM													
2 1⁄4	E-P2B-TRB-2 1⁄4	4	10 1⁄2	2 7⁄8	8 5⁄8	8 3⁄8	5⁄8	3⁄4	7⁄8	1 5⁄8	5 23⁄32	4 1⁄16	2 3⁄4	23
2 7⁄16	E-P2B-TRB-2 7⁄16													
2 1⁄2	E-P2B-TRB-2 1⁄2													
60 mm	E-P2B-TRB-60MM													
65 mm	E-P2B-TRB-65MM													
2 11⁄16	E-P2B-TRB-2 11⁄16	4 1⁄2	12	3	9 11⁄16	9 5⁄16	3⁄4	27⁄32	1	1 7⁄8	6 1⁄4	4 23⁄32	3 1⁄8	28
2 3⁄4	E-P2B-TRB-2 3⁄4													
2 15⁄16	E-P2B-TRB-2 15⁄16													
3	E-P2B-TRB-3													
70 mm	E-P2B-TRB-70MM													
75 mm	E-P2B-TRB-75MM													
3 3⁄16	E-P2B-TRB-3 3⁄16	5	14	3 1⁄2	11 13⁄16	10 13⁄16	7⁄8	1	1 13⁄16	2 1⁄4	7 1⁄2	5 17⁄32	3 3⁄4	48
3 1⁄4	E-P2B-TRB-3 1⁄4													
3 7⁄16	E-P2B-TRB-3 7⁄16													
3 1⁄2	E-P2B-TRB-3 1⁄2													
80 mm	E-P2B-TRB-80MM													
85 mm	E-P2B-TRB-85MM													
90 mm	E-P2B-TRB-90MM													

 3D CAD and 2D drawings available at http://cad.timken.com/category/type-e-housed-unit-bearings

PILLOW BLOCK: FOUR-BOLT BASE

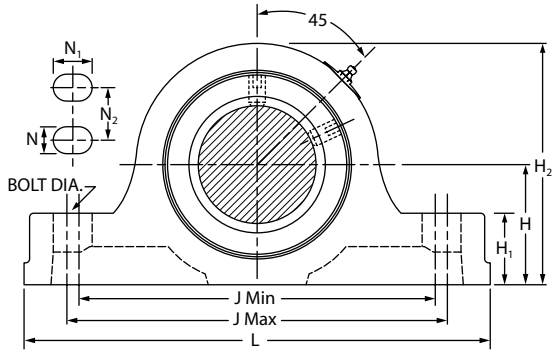

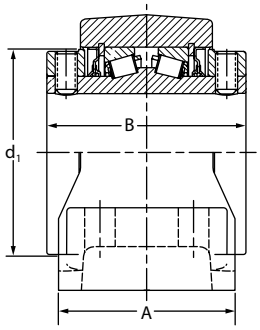

2 1/4 IN. TO 3 IN. SHAFT SIZE

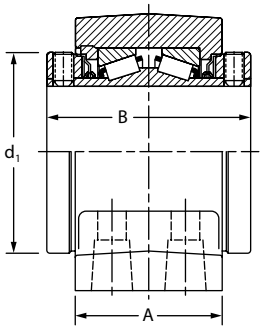

3 3/16 IN. TO 5 IN. SHAFT SIZE

Shaft Dia.	Part No.	B	L	A	J		Bolt Dia.	N	N_1	N_2	H_1	H_2	d_1	H	Approx. Wt.
					Max.	Min.									
in. **mm**		in.	in.	in.	in.	in.	in.	in.	in.	in.	in.	in.	in.	in.	lbs.
2 1/4	E-P4B-TRB-2 1/4	4	10 1/2	3 1/2	8 11/16	8 5/16	5/8	11/16	7/8	1 7/8	1 5/8	5 23/32	4 1/16	2 3/4	22
2 7/16	E-P4B-TRB-2 7/16														
2 1/2	E-P4B-TRB-2 1/2														
60 mm	E-P4B-TRB-60MM														
65 mm	E-P4B-TRB-65MM														
2 11/16	E-P4B-TRB-2 11/16	4 1/2	12	4	9 13/16	9 3/16	5/8	11/16	1	2 1/8	1 7/8	6 1/4	4 23/32	3 1/8	30
2 3/4	E-P4B-TRB-2 3/4														
2 15/16	E-P4B-TRB-2 15/16														
3	E-P4B-TRB-3														
70 mm	E-P4B-TRB-70MM														
75 mm	E-P4B-TRB-75MM														
3 3/16	E-P4B-TRB-3 3/16	5	13 1/2	4 1/2	11 1/4	10 3/4	3/4	15/16	1 3/16	2 3/8	2 1/4	7 1/2	5 17/32	3 3/4	47
3 1/4	E-P4B-TRB-3 1/4														
3 7/16	E-P4B-TRB-3 7/16														
3 1/2	E-P4B-TRB-3 1/2														
80 mm	E-P4B-TRB-80MM														
85 mm	E-P4B-TRB-85MM														
90 mm	E-P4B-TRB-90MM														
3 15/16	E-P4B-TRB-3 15/16	6 1/4	15 1/4	4 1/2	12 3/4	12 1/4	3/4	7/8	1 1/8	2 1/4	2 7/16	8 1/2	6 1/16	4 1/4	72
4	E-P4B-TRB-4														
100 mm	E-P4B-TRB-100MM														
4 7/16	E-P4B-TRB-4 7/16	6 3/4	16 5/8	4 5/8	13 11/16	13 5/16	3/4	15/16	1 1/8	2 1/2	2 3/4	9 3/8	6 47/64	4 3/4	92
4 1/2	E-P4B-TRB-4 1/2														
110 mm	E-P4B-TRB-110MM														
115 mm	E-P4B-TRB-115MM														
4 15/16	E-P4B-TRB-4 15/16	7 1/4	18 1/2	5 1/8	15 3/4	15 1/4	7/8	1	1 1/4	2 7/8	3	10 7/8	7 3/4	5 1/2	134
5	E-P4B-TRB-5														
125 mm	E-P4B-TRB-125MM														

FLANGE: FOUR-BOLT BASE

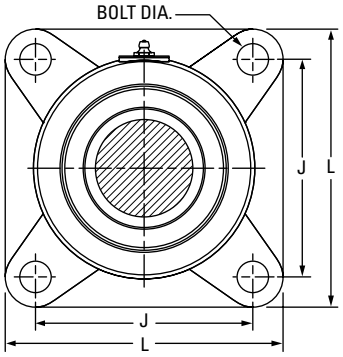

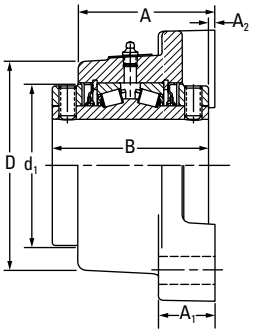

1 3⁄16 IN. TO 3 IN. SHAFT SIZE

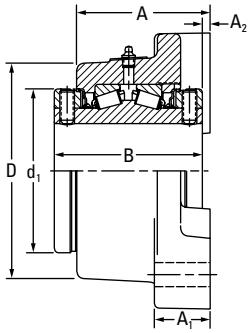

3 3⁄16 IN. TO 4 1⁄2 IN. SHAFT SIZE

Shaft Dia.	Part No.	B	L	A	J	A_2	Bolt Dia.	A_1	D	d_1	Approx. Wt.
in. **mm**		in.	in.	in.	in.	in.	in.	in.	in.	in.	lbs.
1 3⁄16	E-4BF-TRB-1 3⁄16	2 3⁄4	3 3⁄4	2 11⁄32	2 7⁄8	1⁄16	3⁄8	1	2 15⁄16	2 1⁄4	4
1 1⁄4	E-4BF-TRB-1 1⁄4										
1 3⁄8	E-4BF-TRB-1 3⁄8	3	4 5⁄8	2 19⁄32	3 1⁄2	1⁄16	1⁄2	1 1⁄16	3 1⁄2	2 3⁄4	7
1 7⁄16	E-4BF-TRB-1 7⁄16										
35 mm	E-4BF-TRB-35MM										
1 1⁄2	E-4BF-TRB-1 1⁄2	3 3⁄8	5 3⁄8	2 31⁄32	4 1⁄8	1⁄8	1⁄2	1 3⁄16	4 3⁄16	3 3⁄16	11
1 5⁄8	E-4BF-TRB-1 5⁄8										
1 11⁄16	E-4BF-TRB-1 11⁄16										
40 mm	E-4BF-TRB-40MM										
1 3⁄4	E-4BF-TRB-1 3⁄4	3 1⁄2	5 5⁄8	3 3⁄32	4 3⁄8	1⁄8	1⁄2	1 3⁄16	4 7⁄16	3 7⁄16	12
1 7⁄8	E-4BF-TRB-1 7⁄8										
1 15⁄16	E-4BF-TRB-1 15⁄16										
2	E-4BF-TRB-2										
45 mm	E-4BF-TRB-45MM										
50 mm	E-4BF-TRB-50MM										
2 3⁄16	E-4BF-TRB-2 3⁄16	3 3⁄4	6 1⁄4	3 9⁄32	4 7⁄8	1⁄8	5⁄8	1 3⁄8	4 7⁄8	3 3⁄4	16
55 mm	E-4BF-TRB-55MM										
2 1⁄4	E-4BF-TRB-2 1⁄4	4	6 7⁄8	3 9⁄16	5 3⁄8	3⁄16	5⁄8	1 1⁄2	5 5⁄16	4 1⁄16	21
2 7⁄16	E-4BF-TRB-2 7⁄16										
2 1⁄2	E-4BF-TRB-2 1⁄2										
60 mm	E-4BF-TRB-60MM										
65 mm	E-4BF-TRB-65MM										
2 11⁄16	E-4BF-TRB-2 11⁄16	4 1⁄2	7 3⁄4	3 15⁄16	6	3⁄16	3⁄4	1 5⁄8	6	4 23⁄32	29
2 3⁄4	E-4BF-TRB-2 3⁄4										
2 15⁄16	E-4BF-TRB-2 15⁄16										
3	E-4BF-TRB-3										
70 mm	E-4BF-TRB-70MM										
75 mm	E-4BF-TRB-75MM										
3 3⁄16	E-4BF-TRB-3 3⁄16	5	9 1⁄4	4 1⁄2	7	1⁄4	3⁄4	1 7⁄8	7 1⁄4	5 17⁄32	52
3 1⁄4	E-4BF-TRB-3 1⁄4										
3 7⁄16	E-4BF-TRB-3 7⁄16										
3 1⁄2	E-4BF-TRB-3 1⁄2										
80 mm	E-4BF-TRB-80MM										
85 mm	E-4BF-TRB-85MM										
90 mm	E-4BF-TRB-90MM										
3 15⁄16	E-4BF-TRB-3 15⁄16	6 1⁄4	10 1⁄4	5 5⁄8	7 3⁄4	1⁄4	7⁄8	2 1⁄8	8 1⁄4	6 1⁄16	76
4	E-4BF-TRB-4										
100 mm	E-4BF-TRB-100MM										
4 7⁄16	E-4BF-TRB-4 7⁄16	6 3⁄4	10 7⁄8	5 15⁄16	8 3⁄4	3⁄8	7⁄8	2 7⁄16	8 3⁄4	6 47⁄64	90
4 1⁄2	E-4BF-TRB-4 1⁄2										
110 mm	E-4BF-TRB-110MM										
115 mm	E-4BF-TRB-115MM										

FLANGE: PILOTED

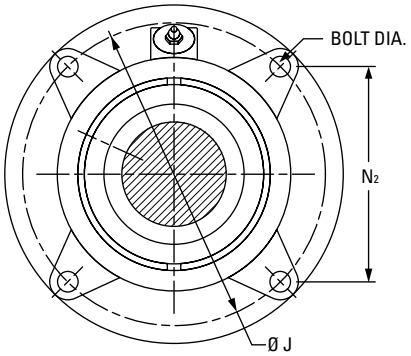

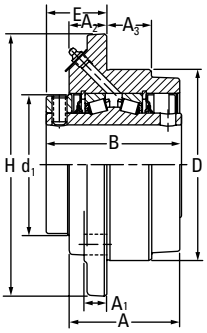

1 3/16 IN. TO 3 IN. SHAFT SIZE

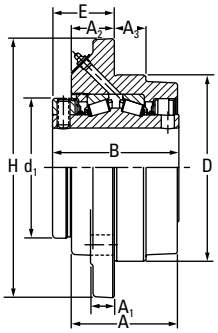

3 3/16 IN. TO 3 1/2 IN. SHAFT SIZE

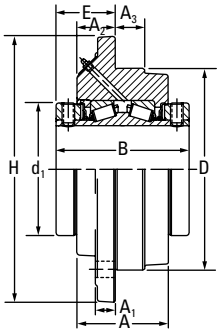

3 15/16 IN. TO 5 IN. SHAFT SIZE

Shaft Dia.	Part No.	B	H	A	N_2	J	A_3	Bolt Dia.	E	A_1	D[1]	d_1	A_2	Approx. Wt.
in. **mm**		in.	in.	in.	in.	in.	in.	in.	in.	in.	in.	in.	in.	lbs.
1 3/16	E-PF-TRB-1 3/16	2 3/4	5	2 7/32	2 9/64	4 1/8	3/4	3/8	1 5/16	7/16	3 3/8	2 1/4	27/32	5
1 1/4	E-PF-TRB-1 1/4													
1 3/8	E-PF-TRB-1 3/8	3	5 1/4	2 15/32	3 3/32	4 3/8	7/8	3/8	1 1/2	1/2	3 5/8	2 3/4	1 1/32	6
1 7/16	E-PF-TRB-1 7/16													
35 mm	E-PF-TRB-35MM													
1 1/2	E-PF-TRB-1 1/2	3 3/8	6 1/8	2 25/32	3 5/8	5 1/8	1 1/16	7/16	1 9/16	1/2	4 1/4	3 3/16	1 1/32	9
1 5/8	E-PF-TRB-1 5/8													
1 11/16	E-PF-TRB-1 11/16													
40 mm	E-PF-TRB-40MM													
1 3/4	E-PF-TRB-1 3/4	3 1/2	6 3/8	2 29/32	3 51/64	5 3/8	1 3/16	7/16	1 9/16	9/16	4 1/2	3 7/16	1 1/32	10
1 7/8	E-PF-TRB-1 7/8													
1 15/16	E-PF-TRB-1 15/16													
2	E-PF-TRB-2													
45 mm	E-PF-TRB-45MM													
50 mm	E-PF-TRB-50MM													
2 3/16	E-PF-TRB-2 3/16	3 3/4	7 1/8	3 3/32	4 15/64	6	1 3/16	1/2	1 11/16	9/16	5	3 3/4	1 3/32	13
55 mm	E-PF-TRB-55MM													
2 1/4	E-PF-TRB-2 1/4	4	7 5/8	3 5/16	4 19/32	6 1/2	1 5/16	1/2	1 13/16	5/8	5 1/2	4 1/16	1 3/16	17
2 7/16	E-PF-TRB-2 7/16													
2 1/2	E-PF-TRB-2 1/2													
60 mm	E-PF-TRB-60MM													
65 mm	E-PF-TRB-65MM													
2 11/16	E-PF-TRB-2 11/16	4 1/2	8 3/4	3 11/16	5 19/64	7 1/2	1 1/2	5/8	2	3/4	6 3/8	4 23/32	1 1/4	26
2 3/4	E-PF-TRB-2 3/4													
2 15/16	E-PF-TRB-2 15/16													
3	E-PF-TRB-3													
70 mm	E-PF-TRB-70MM													
75 mm	E-PF-TRB-75MM													
3 3/16	E-PF-TRB-3 3/16	5	10 1/4	4 3/16	6 3/32	8 5/8	1 1/4	3/4	2 7/16	15/16	7 3/8	5 17/32	1 11/16	43
3 1/4	E-PF-TRB-3 1/4													
3 7/16	E-PF-TRB-3 7/16													
3 1/2	E-PF-TRB-3 1/2													
80 mm	E-PF-TRB-80MM													
85 mm	E-PF-TRB-85MM													
90 mm	E-PF-TRB-90MM													
3 15/16	E-PF-TRB-3 15/16	6 1/4	10 7/8	4 1/2	6 5/8	9 3/8	1 1/2	3/4	2 11/16	1	8 1/8	6 1/16	1 13/16	58
4	E-PF-TRB-4													
100 mm	E-PF-TRB-100MM													
4 7/16	E-PF-TRB-4 7/16	6 3/4	13 1/2	4 5/8	5 7/8 [2]	11 3/4	1 1/2	3/4 [2]	3	1	10 1/4	6 47/64	1 15/16	93
4 1/2	E-PF-TRB-4 1/2													
110 mm	E-PF-TRB-110MM													
115 mm	E-PF-TRB-115MM													
4 15/16	E-PF-TRB-4 15/16	7 1/4	14 3/4	5 1/16	6 3/8 [2]	12 3/4	1 3/4	7/8 [2]	2 31/32	1 1/4	11	7 3/4	1 7/8	126
5	E-PF-TRB-5													
125 mm	E-PF-TRB-125MM													

[1] +0.000 in./ 0.002 in.
[2] Six holes equally spaced (chordal spacing shown).
Note: 1 3/16 to 3 1/2 utilize one collar; 3 15/16 to 5 utilize two collars.

TAKE-UP: WIDE SLOT

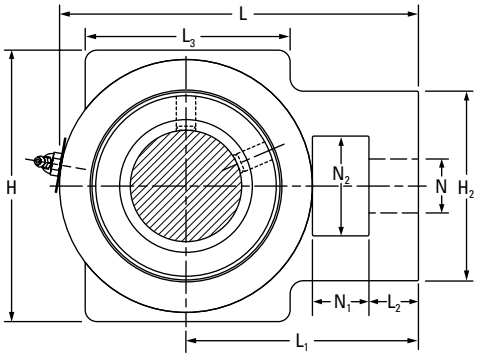

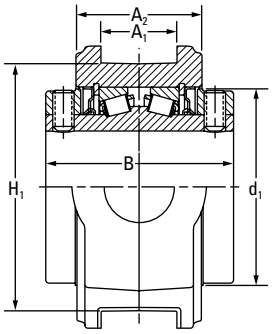

1⅜ IN. TO 3 IN. SHAFT SIZE

Shaft Dia.	Part No.	B	L	A_1	L_3	L_1	N	L_2	N_1	H_2	N_2	d_1	H_1	H	A_2	Approx. Wt.
in. **mm**		in.	in.	in.	in.	in.	in.	in.	in.	in.	in.	in.	in.	in.	in.	lbs.
1 3/8	E-TU-TRB-1 3/8	3	5 3/32	17/32	2 3/4	3 7/32	7/8	11/16	5/8	2 7/16	1 7/16	2 3/4	3 1/2	4 1/8	2 1/16	7
1 7/16	E-TU-TRB-1 7/16															
35 mm	E-TU-TRB-35MM															
1 1/2	E-TU-TRB-1 1/2	3 3/8	6	11/16	3 1/4	3 13/16	1 1/8	15/16	3/4	3 5/16	1 15/16	3 3/16	4	4 3/4	2 5/16	12
1 5/8	E-TU-TRB-1 5/8															
1 11/16	E-TU-TRB-1 11/16															
40 mm	E-TU-TRB-40MM															
1 3/4	E-TU-TRB-1 3/4	3 1/2	6 5/16	11/16	3 3/4	3 5/16	1 1/8	15/16	3/4	3 5/16	1 15/16	3 7/16	4	4 3/4	2 7/16	13
1 7/8	E-TU-TRB-1 7/8															
1 15/16	E-TU-TRB-1 15/16															
2	E-TU-TRB-2															
45 mm	E-TU-TRB-45MM															
50 mm	E-TU-TRB-50MM															
2 3/16	E-TU-TRB-2 3/16	3 3/4	7 1/8	13/16	3 3/4	4 5/8	1 1/4	1	1 1/4	3 7/8	2 1/4	3 3/4	4 1/2	5 1/4	2 9/16	16
55 mm	E-TU-TRB-55MM															
2 1/4	E-TU-TRB-2 1/4	4	7 13/16	1 1/16	4 1/2	5 1/16	1 3/8	1 1/16	1 1/4	4 5/16	2 1/2	4 1/16	5 1/8	6	2 3/4	21
2 7/16	E-TU-TRB-2 7/16															
2 1/2	E-TU-TRB-2 1/2															
60 mm	E-TU-TRB-60MM															
65 mm	E-TU-TRB-65MM															
2 11/16	E-TU-TRB-2 11/16	4 1/2	9 3/16	1 13/16	4 3/4	5 7/8	1 11/16	1 1/8	1 1/2	4 15/16	2 3/4	4 23/32	5 15/16	6 3/4	3	30
2 3/4	E-TU-TRB-2 3/4															
2 15/16	E-TU-TRB-2 15/16															
3	E-TU-TRB-3															
70 mm	E-TU-TRB-70MM															
75 mm	E-TU-TRB-75MM															

TAKE-UP: TOP ANGLE

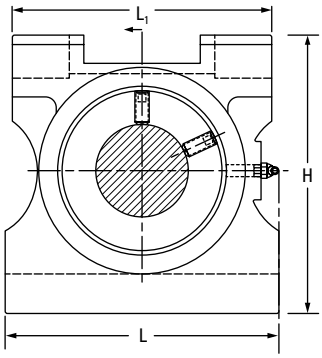

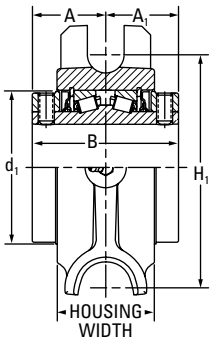

1 3/16 IN. TO 3 IN. SHAFT SIZE

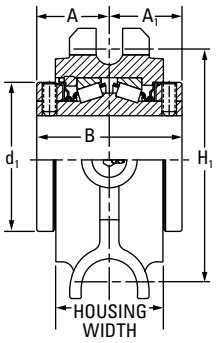

3 3/16 IN. TO 4 IN. SHAFT SIZE

Shaft Dia.	Part No.	B	H_1	H	d_1	A	A_1	Housing Width	L	L_1	Approx. Wt.
in. **mm**		in.	in.	in.	in.	in.	in.	in.	in.	in.	lbs.
1 3/4	E-TTU-TRB-1 3/4	3 1/2	5 3/16	6 3/8	3 7/16	1 3/4	1 3/4	2 9/16	6 1/2	6	14
1 7/8	E-TTU-TRB-1 7/8										
1 15/16	E-TTU-TRB-1 15/16										
2	E-TTU-TRB-2										
45 mm	E-TTU-TRB-45MM										
50 mm	E-TTU-TRB-50MM										
2 3/16	E-TTU-TRB-2 3/16	3 3/4	5 13/16	6 7/8	3 3/4	1 7/8	1 7/8	2 9/16	6 3/4	7	17
55 mm	E-TTU-TRB-55MM										
2 1/4	E-TTU-TRB-2 1/4	4	6 1/4	7 7/16	4 1/16	2	2	3	7 1/2	7	22
2 7/16	E-TTU-TRB-2 7/16										
2 1/2	E-TTU-TRB-2 1/2										
60 mm	E-TTU-TRB-60MM										
65 mm	E-TTU-TRB-65MM										
2 11/16	E-TTU-TRB-2 11/16	4 1/2	7 3/16	8 5/16	4 23/32	2 1/4	2 1/4	3	8 1/2	8	30
2 3/4	E-TTU-TRB-2 3/4										
2 15/16	E-TTU-TRB-2 15/16										
3	E-TTU-TRB-3										
70 mm	E-TTU-TRB-70MM										
75 mm	E-TTU-TRB-75MM										
3 3/16	E-TTU-TRB-3 3/16	5	8 5/16	9 5/8	5 17/32	2 1/2	2 1/2	3 3/4	9 1/2	9	46
3 1/4	E-TTU-TRB-3 1/4										
3 7/16	E-TTU-TRB-3 7/16										
3 1/2	E-TTU-TRB-3 1/2										
80 mm	E-TTU-TRB-80MM										
85 mm	E-TTU-TRB-85MM										
90 mm	E-TTU-TRB-90MM										
3 15/16	E-TTU-TRB-3 15/16	6 1/4	9 1/16	11	6 1/16	3 1/8	3 1/8	4 3/4	11	10 1/2	70
4	E-TTU-TRB-4										
100 mm	E-TTU-TRB-100MM										

LOAD AND SPEED RATING TABLES

The table below shows the allowable equivalent radial load for a given shaft size, speed, and L_{10} life under normal operating conditions with adequate lubrication. Refer to the discussion on the previous pages of this catalog to determine the criteria for combinations not shown in this table or for combined load applications.

NOTE

The shaded area in this table indicates radial loads that exceed the maximum allowable slip-fit radial load ($F_{r\text{-}max}$). Operation at these conditions may require line-to-line (g6 or h6) or light press fit (m6) on the shaft.

TABLE 1. TYPE E TAPERED ROLLER BEARING LOAD RATING SELECTION TABLE

Shaft Dia.	Basic Dynamic Load Rating	Max Speed Timken Double-Lip Seal	Life	Equivalent Radial Loads Allowed, P_r at Various Speeds, RPM																	
	C_{90}		L_{10}	50	100	150	250	500	750	1000	1200	1360	1530	1640	1750	2060	2420	2730	3050	3320	3820	4490
in. **mm**	lbs.	RPM	hrs.	lbs.	lbs.	lbs.	lbs.	lbs.	lbs.	lbs.	lbs.	lbs.	lbs.	lbs.	lbs.	lbs.	lbs.	lbs.	lbs.	lbs.	lbs.	lbs.
1 3/16 1 1/4	3810	4490	10000	5297	4303	3810	3269	2655	2351	2157	2042	1966	1898	1859	1823	1736	1654	1596	1543	1505	1443	1374
			30000	3810	3095	2740	2351	1910	1691	1551	1468	1414	1365	1337	1311	1249	1190	1148	1110	1082	1038	988
			40000	3495	2839	2514	2157	1752	1551	1423	1347	1297	1252	1227	1203	1145	1091	1053	1018	993	952	907
			60000	3095	2514	2226	1910	1551	1373	1260	1193	1149	1109	1086	1065	1014	966	932	902	879	843	803
			100000	2655	2157	1910	1638	1331	1178	1081	1023	986	951	932	914	870	829	800	774	754	723	689
1 3/8 1 7/16 **35 mm**	6100	3820	10000	8481	6889	6100	5233	4251	3764	3453	3269	3148	3039	2976	2919	2780	2649	2555	2471	2409	2310	
			30000	6100	4955	4387	3764	3057	2707	2483	2351	2264	2186	2141	2099	1999	1905	1837	1777	1733	1661	
			40000	5596	4545	4024	3453	2804	2483	2278	2157	2077	2005	1964	1926	1834	1747	1685	1630	1589	1524	
			60000	4955	4024	3564	3057	2483	2199	2017	1910	1839	1775	1739	1705	1624	1547	1492	1444	1407	1349	
			100000	4251	3453	3057	2623	2130	1886	1730	1638	1578	1523	1492	1463	1393	1327	1280	1238	1207	1158	
1 1/2 1 5/8 1 11/16 **40 mm**	7860	3320	10000	10928	8877	7860	6743	5477	4850	4449	4212	4057	3916	3835	3761	3582	3413	3292	3184	3104		
			30000	7860	6384	5653	4850	3939	3488	3200	3029	2918	2816	2758	2705	2576	2455	2367	2290	2232		
			40000	7210	5856	5186	4449	3614	3200	2935	2779	2677	2584	2530	2482	2363	2252	2172	2101	2048		
			60000	6384	5186	4592	3939	3200	2833	2599	2461	2370	2288	2241	2197	2092	1994	1923	1860	1813		
			100000	5477	4449	3939	3380	2745	2431	2230	2111	2033	1963	1922	1885	1795	1710	1650	1596	1556		
1 3/4 1 7/8 1 15/16 2 **45 mm** **50 mm**	10300	3050	10000	14321	11632	10300	8837	7178	6355	5830	5520	5316	5132	5026	4929	4694	4472	4313	4172			
			30000	10300	8366	7408	6355	5162	4571	4193	3970	3824	3691	3615	3545	3376	3217	3102	3001			
			40000	9448	7674	6795	5830	4735	4193	3846	3642	3507	3386	3316	3252	3097	2951	2846	2753			
			60000	8366	6795	6017	5162	4193	3713	3406	3225	3106	2998	2936	2879	2742	2613	2520	2437			
			100000	7178	5830	5162	4429	3597	3185	2922	2766	2664	2572	2519	2470	2352	2241	2162	2091			
2 3/16 **55 mm**	10900	2730	10000	15155	12310	10900	9351	7596	6726	6170	5841	5626	5431	5319	5216	4967	4733	4565				
			30000	10900	8854	7840	6726	5463	4837	4437	4201	4046	3906	3825	3752	3572	3404	3283				
			40000	9999	8121	7191	6170	5011	4437	4070	3854	3712	3583	3509	3441	3277	3122	3012				
			60000	8854	7191	6368	5463	4437	3929	3604	3412	3287	3172	3107	3047	2902	2765	2667				
			100000	7596	6170	5463	4687	3807	3371	3092	2928	2820	2722	2666	2614	2489	2372	2288				
2 1/4 2 7/16 2 1/2 **60 mm** **65 mm**	11600	2420	10000	16129	13100	11600	9952	8083	7158	6566	6216	5987	5779	5660	5551	5286	5037					
			30000	11600	9422	8343	7158	5814	5148	4722	4471	4306	4157	4071	3992	3802	3622					
			40000	10641	8643	7653	6566	5333	4722	4332	4101	3950	3813	3734	3662	3487	3323					
			60000	9422	7653	6777	5814	4722	4181	3836	3631	3498	3376	3307	3243	3088	2942					
			100000	8083	6566	5814	4988	4051	3587	3291	3116	3001	2897	2837	2782	2649	2524					
2 11/16 2 3/4 2 15/16 3 **70** **75**	12300	2060	10000	17102	13891	12300	10552	8571	7590	6962	6591	6348	6128	6002	5886	5605						
			30000	12300	9991	8846	7590	6165	5459	5007	4741	4566	4407	4317	4233	4031						
			40000	11283	9165	8115	6962	5655	5007	4593	4349	4188	4043	3960	3883	3698						
			60000	9991	8115	7186	6165	5007	4434	4067	3851	3709	3580	3506	3439	3274						
			100000	8571	6962	6165	5289	4296	3804	3489	3304	3182	3071	3008	2950	2809						
3 3/16 3 1/4 3 7/16 3 1/2 **80 mm** **85 mm** **90 mm**	19600	1640	10000	27252	22135	19600	16815	13658	12094	11094	10503	10116	9765	9564								
			30000	19600	15920	14097	12094	9823	8698	7979	7554	7276	7023	6879								
			40000	17979	14604	12931	11094	9011	7979	7319	6930	6674	6443	6310								
			60000	15920	12931	11450	9823	7979	7065	6481	6136	5910	5705	5587								
			100000	13658	11094	9823	8428	6845	6061	5560	5264	5070	4894	4793								

Continued on next page.

Continued from previous page.

Shaft Dia.	Basic Dynamic Load Rating	Max Speed Timken Double-Lip Seal	Life	Equivalent Radial Loads Allowed, P_r at Various Speeds, RPM																		
	C_{90}		L_{10}	50	100	150	250	500	750	1000	1200	1360	1530	1640	1750	2060	2420	2730	3050	3320	3820	4490
in. **mm**	lbs.	RPM	hrs.	lbs.	lbs.	lbs.	lbs.	lbs.	lbs.	lbs.	lbs.	lbs.	lbs.	lbs.	lbs.	lbs.	lbs.	lbs.	lbs.	lbs.	lbs.	lbs.
3 15/16 4 **100 mm**	26900	1530	10000	37401	30379	26900	23078	18745	16598	15226	14415	13884	13402									
			30000	26900	21850	19347	16598	13482	11938	10951	10368	9986	9639									
			40000	24676	20043	17747	15226	12367	10951	10045	9511	9160	8842									
			60000	21850	17747	15715	13482	10951	9697	8895	8421	8111	7829									
			100000	18745	15226	13482	11566	9395	8319	7631	7225	6959	6717									
4 7/16 4 1/2 **110 mm** **115 mm**	33000	1360	10000	45883	37268	33000	28311	22996	20362	18678	17684	17033										
			30000	33000	26804	23734	20362	16539	14645	13434	12719	12250										
			40000	30271	24588	21772	18678	15172	13434	12323	11667	11237										
			60000	26804	21772	19278	16539	13434	11895	10912	10331	9950										
			100000	22996	18678	16539	14189	11525	10205	9361	8863	8536										
4 15/16 5 **125 mm**	45500	1200	10000	63263	51385	45500	39035	31706	28075	25754	24383											
			30000	45500	36957	32725	28075	22804	20192	18523	17537											
			40000	41738	33902	30019	25754	20918	18523	16991	16087											
			60000	36957	30019	26581	22804	18523	16401	15045	14244											
			100000	31706	25754	22804	19564	15891	14071	12907	12220											

HOUSING RATINGS

TABLE 2. HOUSING RATINGS – TYPE E PILLOW BLOCKS: TWO-BOLT BASE, FOUR-BOLT BASE

Shaft Dia.	Maximum Housing Rating Gray Iron at 180°
in. **mm**	lbs.
1 3/16 thru 1 1/4	1600
1 3/8 thru 1 7/16 **35**	3150
1 1/2 thru 1 11/16 **40**	3000
1 3/4 thru 2 **45 thru 50**	5150
2 3/16 **55**	3500
2 1/4 thru 2 1/2 **60 thru 65**	6550
2 11/16 thru 3 **70 thru 75**	7000
3 3/16 thru 3 1/2 **80 thru 90**	15700
3 15/16 thru 4 **100**	16250
4 7/16 thru 4 1/2 **110 thru 115**	21000
4 15/16 thru 5 **125**	22860

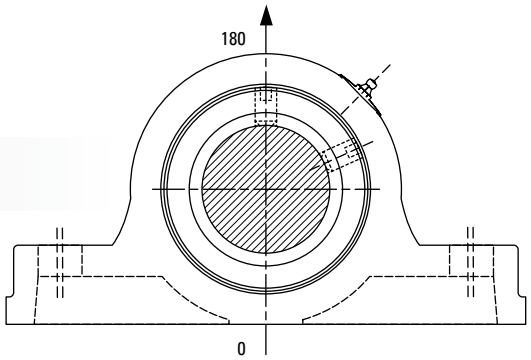

The following conditions apply for Table 2:

1. These ratings have been calculated for initial bearing selection. These include a nominal safety factor for the standard Type E two- and four-bolt pillow blocks. Ratings based on the following conditions: standard cast-iron material, the force is applied perpendicular to the shaft axis, and the housing bolts are properly clamped.
2. These limits should not be applied to operating conditions that include impact (shock) loads or combined radial and thrust loads that are not directed into the pillow block base.
3. If heavy cap loads are expected, use the following modifications to mounting method or equipment design: Grade 8 base bolts and hardened washers; ensure that proper installation torque is achieved and is uniform.
4. If axial loads are expected, provide mechanical stops or shear bars with strength sufficient to support the load. Specification of the strength, material, method of fastening, and precision location are the responsibility of the machinery designer.

TABLE 3. TAPERED ROLLER BEARING – RADIAL AND THRUST FACTORS; SPEED AND SLIP-FIT LOAD LIMITS

Shaft Dia.		$F_a / F_r \leq e$		$F_a / F_r > e$		K Factor	Dynamic Load Rating[1]	Static Load Rating	Maximum Permissible Thrust Load[2]	Max Speed[3]	Maximum Allowable Slip-Fit Radial Load[4]
	e	X	Y	X	Y		C_{90}	C_0	$F_{a\text{-}max}$		$F_{r\text{-}max}$
in. **mm**							lbs.	lbs.	lbs.	RPM	lbs.
1 3/16 1 1/4	0.49	0.87	1.77	0.70	2.14	1.23	3810	15760	2000	4490	3100
1 3/8 1 7/16 **35 mm**	0.46	0.87	1.89	0.70	2.28	1.31	6100	26000	2590	3820	5000
1 1/2 1 5/8 1 11/16 **40 mm**	0.44	0.87	1.96	0.70	2.37	1.36	7860	33000	2590	3320	6400
1 3/4 1 7/8 1 15/16 2 **45 mm** **50 mm**	0.33	0.87	2.64	0.70	3.18	1.83	10300	43000	3454	3050	8400
2 3/16 **55 mm**	0.36	0.87	2.38	0.70	2.87	1.65	10900	48200	3454	2730	8900
2 1/4 2 7/16 2 1/2 **60 mm** **65 mm**	0.4	0.87	2.17	0.70	2.63	1.51	11600	54000	3454	2420	9500
2 11/16 2 3/4 2 15/16 3 **70 mm** **75 mm**	0.46	0.87	1.87	0.70	2.26	1.3	12300	61200	5181	2060	10000
3 3/16 3 1/4 3 7/16 3 1/2 **80 mm** **85 mm** **90 mm**	0.5	0.87	1.71	0.70	2.07	1.19	19600	108600	5181	1640	16000
3 15/16 4 **100 mm**	0.49	0.87	1.77	0.70	2.14	1.23	26900	154000	6908	1530	22000
4 7/16 4 1/2 **110 mm**	0.53	0.87	1.63	0.70	1.97	1.13	33000	188400	6908	1360	27000
4 15/16 5 **125 mm**	0.47	0.87	1.83	0.70	2.21	1.27	45500	266000	6908	1200	35000

[1] C_{90} is the dynamic load rating based on a rated life of 90 million revolutions (3000 hrs. at 500 RPM).

[2] $F_{a\text{-}max}$ is based on the limits of the holding force of two properly tightened collars and set screws. When a single collar is installed, 50 percent of the values should be used.

[3] Double-lip seal.

[4] Operating at conditions where loads approach or exceed $F_{r\text{-}max}$ may require line-to-line (g6 or h6) or light press-fit (m6) on the shaft.

NOTE: The maximum permissible thrust load applies to conditions of slip-fit with set screw mounting or in applications where a large moment loading occurs. The values shown are valid only when two collars and set screws are used.

NOTE: When heavy thrust forces are applied, the friction between the pillow block and base may not be sufficient to prevent movement. Mechanical stops or shear bars with strength sufficient to support the load should be added. Never weld the pillow block or bearing to secure it to the shaft or base.

BEARING SELECTION AND LIFE CALCULATIONS

Many different performance criteria exist that dictate how a bearing should be selected. These include bearing fatigue life, rotational precision, power requirements, temperature limits, speed capabilities, sound and more. The life can also be limited by other system components such as the shaft, shaft interface and the housing. This section deals primarily with bearing life as related to material-associated fatigue.

Bearing Life

Bearing life is defined here as the length of time, or number of revolutions, until a fatigue spall of 6 mm^2 (0.01 $in.^2$) develops. Since metal fatigue is a statistical phenomenon, the life of an individual bearing is impossible to precisely predetermine. Bearings that may appear to be identical can exhibit considerable life scatter when tested under identical conditions. Thus it is necessary to base life predictions on a statistical evaluation of a large number of bearings operating under similar conditions. The Weibull distribution function is commonly used to predict the life of a population of bearings at any given reliability level.

Rating Life

Rating life, (L_{10}), is the life that 90 percent of a group of apparently identical bearings will complete or exceed before a fatigue spall develops. The L_{10} life also is associated with 90 percent reliability for a single bearing under a certain load.

Bearing Life Equations

The L_{10} life has been calculated as follows for bearings under radial or combined loading where the dynamic equivalent radial load, (P_r), has been determined.

Tapered roller bearings often use a dynamic load rating (C_{90}) based on ninety million cycles, yielding the standard bearing life equations as follows:

$$L_{10} = \left(\frac{C_{90}}{P_r}\right)^{10/3} (90 \times 10^6) \text{ revolutions}$$

or based on shaft speed, (RPM),

$$L_{10} = \left(\frac{C_{90}}{P_r}\right)^{10/3} \left(\frac{90 \times 10^6}{60n}\right) \text{hours}$$

Timken has expanded standard life equations to include certain additional variables that can affect bearing performance. The approach that considers these factors in bearing analysis and selection has been termed Bearing Systems Analysis (BSA).

The Timken expanded bearing life equation for tapered roller bearings is:

$$L_{10a} = a_1 a_2 a_{3d} a_{3k} a_{3l} a_{3m} a_{3p} \left(\frac{C_{90}}{P_r}\right)^{10/3} \left(\frac{90 \times 10^6}{60n}\right) \text{hours}$$

Where,

a_1 = Reliability life factor
a_2 = Material life factor
a_{3d} = Debris life factor
a_{3k} = Load zone life factor
a_{3l} = Lubrication life factor
a_{3m} = Misalignment life factor
a_{3p} = Low-load life factor

More details on Life Adjustment Factors can be found in the Timken Engineering Manual (order no. 10424) available on timken.com or by contacting a Timken engineer.

Other factors that can be taken into account within the simple bearing life equation are shock or vibration. These are known to occur in many industrial applications due to combined factors including imbalanced dynamic forces, abusive handling, equipment misuse or neglect. These are difficult to predict.

When these conditions are known or suspected to occur, we suggest that equipment designers use a multiplication factor of (1.5 x P_r) to estimate effects on housed unit selection and system reliability. Performance testing or advanced analysis is strongly suggested to validate final product selection.

Timken® Roller Housed Unit Selection

The double extended tapered roller bearings used in the Type E roller housed units are suited for carrying radial, thrust or a combination of both types of loading. This section will describe the bearing selection process using different methods based on selection criteria and application details.

Method 1 – Selection table (radial loads only)

NOTE: Based on reference conditions with adequate lubrication.

1. Determine criteria for bearing selection
   - L10 life required.
   - Size of bearing based on shaft size (if known).
   - Loading conditions (radial) of the application.
   - Shaft speed measured by revolutions per minute (RPM).
2. Use table 1 on page 14:
   - Find speed criteria on upper row.
   - Proceed in the column directly below that speed to the equivalent radial load (P_r) that is equal to or greater than that required.
   - Follow that row to the left to determine what the minimum shaft size should be for the required L_{10} life (hours). Many values are listed to help in selecting the proper bearing.

Method 2 – Using bearing life equation to select bearing for a different L_{10} life (radial loads only)

If a different life is required than what is found in table 1, it can be calculated from the bearing life equation. Note that each value in the selection table was calculated using this equation. The equation can be rewritten based on the unknown value.

Take the bearing life equation shown previously:

$$L_{10} = \left(\frac{C_{90}}{P_r}\right)^{10/3} \left(\frac{90 \times 10^6}{60n}\right) \text{ hours}$$

Or rewritten as:

$$L_{10} = \left(\frac{C_{90}}{P_r}\right)^{10/3} \left(\frac{1500000}{n}\right) \text{ hours}$$

Then to solve for C_{90}:

$$C_{90} = \left(\frac{L_{10} \times n}{1500000}\right)^{0.3} \left(P_r\right)$$

After calculating the C_{90}, check table 1 to determine the shaft size needed. (NOTE: Ensure that the application speed does not exceed the maximum RPM – found on that same table). Check the radial load, as well, with regard to the maximum allowable slip-fit radial load ($F_{r\text{-}max}$, see table 3 on page 16). If this value is exceeded, then a tighter line-to-line or press fit is required.

Timken Method 3a – Determine equivalent radial loads and use bearing life equation (for combined radial- and thrust-loaded applications)

For combined radial- and thrust-loaded applications, it is necessary to calculate an equivalent dynamic radial bearing load, designated by P_r, before applying the L_{10} bearing life equation. The dynamic equivalent radial load is defined as a single radial load that, if applied to the bearing, will result in the same life as the combined loading under which the bearing operates.

Tapered roller bearings are ideally suited to carrying all types of loads – radial, thrust and any combination of both. Due to the tapered design of the bearing, a radial load will induce a thrust reaction that must be opposed by an equal or greater thrust load to keep the bearing cone and cup from separating.

The ratio of the radial to the thrust load and the bearing included cup angle determine the load zone in a given bearing. The number of rollers in contact as a result of this ratio determines the load zone in the bearing. If all the rollers are in contact, the load zone is referred to as being 360 degrees. When only radial load is applied to a tapered roller bearing – for convenience it is assumed in using the traditional calculation method that half the rollers support the load – the load zone – is 180 degrees.

For Type E roller housed units with no external thrust load ($F_a = 0$), the dynamic equivalent radial load (P_r) equals F_r. This P_r value can then be used in the bearing life equations shown on page 17.

For Type E units with thrust loading, table 4 on page 19 can be used. In this table, only bearing A has an applied thrust load. If bearing B has the applied thrust load, each A in the equations should be replaced by a B and vice versa.

The equations in the first row of table 4 yield single-row equivalent radial loads (P_{rA} and P_{rB}). To find the two-row (Type E housed unit) life, the following equations must be used to solve for L_{10} life of each bearing row, and then combined for the system unit life:

$$L_{10A} = \left(\frac{C_{90}}{1.74 \times P_{rA}}\right)^{10/3} \left(\frac{1500000}{n}\right) \text{ hours}$$

and,

$$L_{10B} = \left(\frac{C_{90}}{1.74 \times P_{rB}}\right)^{10/3} \left(\frac{1500000}{n}\right) \text{ hours}$$

then,

$$L_{10} = \left[\left(\frac{1}{L_{10A}}\right)^{3/2} + \left(\frac{1}{L_{10B}}\right)^{3/2}\right]^{-2/3} \text{ hours}$$

In the second row of table 4, $P_{rB} = 0$; therefore, $P_{rA} = P_r$ in the standard bearing life equations shown on page 17.

ISO Method 3b

The ISO Method uses the following equation to determine the equivalent dynamic radial load:

$$P_r = XF_r + YF_a$$

Where,

P_r = Dynamic equivalent radial load
F_r = Applied radial load
F_a = Applied axial load
X = Radial load factor
Y = Axial load factor

The values for X and Y are found in table 3 on page 16. In order to find these values, the value of F_r / F_a must be compared to the e value. Determine if the value is greater than or less than the e and then use the corresponding X and Y values below that formula.

After the P_r value is calculated, then use the standard bearing life equations as shown on page 17.

TABLE 4. DYNAMIC EQUIVALENT RADIAL LOAD CALCULATIONS

Design	Thrust Condition	Dynamic Equivalent Radial Load
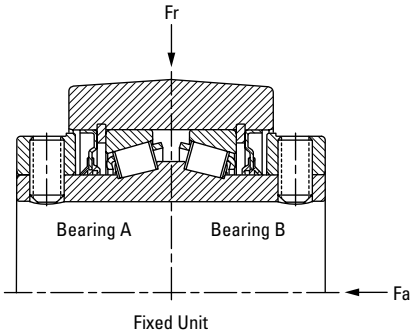	$F_a \leq \frac{0.6\,F_r}{K}$	$P_{rA} = 0.5\,F_r + 0.83\,K\,F_a$ $P_{rB} = 0.5\,F_r - 0.83\,K\,F_a$
	$F_a > \frac{0.6\,F_r}{K}$	$P_{rA} = 0.4\,F_r + K\,F_a$ $P_{rB} = 0$

ISO Method 4 – (thrust-only applications)

Use the equation $P_r = YF_a$. Use Y from table 3. Then use this P_r value for the equivalent radial load in the bearing life equation. This value can also be used as the radial load in the selection table.

After selection has been made, verify that the application does not exceed the maximum allowable speed, allowable thrust loads and allowable housing loads. Heavy loads should be directed through the base of the units. See table 2 on page 15 for housing ratings for loads applied upward through the top of the housed unit perpendicular to the shaft axis. The housings need to be bolted down with adequate strength.

INSTALLATION AND LUBRICATION

INSTALLATION

Proper installation of the housed unit is necessary. This includes the use of shafts that are clean, free from nicks and burrs, straight and of proper diameter. The suggested shaft tolerances shown in table 5 on page 20 are for normal loaded applications. Refer to table 3 on page 16 to verify the maximum allowable slip-fit radial load ($F_{r\text{-}max}$) and to determine if a tighter fit is required.

Do not mount the bearing on a worn section of the shaft. Use of shafts with hardness greater than HRC45 will reduce effectiveness of locking devices.

Also, it is necessary that the housed units and shafts are in alignment (fig. 1). Verify that the mounting surfaces are in the same flat plane to help make sure good alignment is achieved. If shimming is required to minimize misalignment, use full shims across the entire housing base (fig. 2). The bolts then need to be alternately torqued securely to their mounting supports.

Flat washers should be used when installing any kind of housed unit (fig. 2). Washers should be properly sized to the bolt diameter. Typically, the diameters of SAE washers are too small to properly cover the bolt slots on the units. After the locking collars are lined up flush with the end of the cone (inner ring) face (fig. 3), set screws then need to be properly tightened per table 6 on page 20. Set screws in multiple units should be aligned to each other (fig. 4).

Figure 1

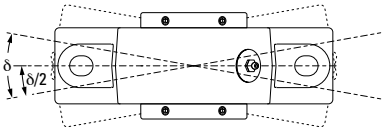

Align housing to 1/2 total angular movement

Figure 2

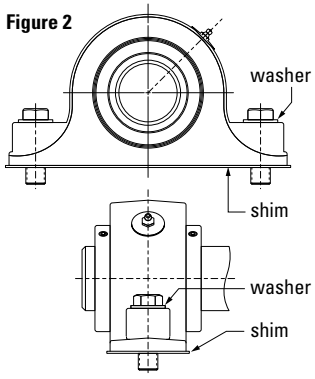

Use washers and full shims

Figure 3

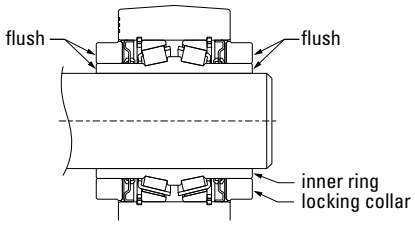

Line up collars with inner ring

Figure 4

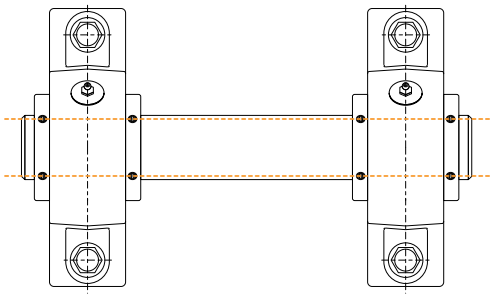

Line up set screws in multiple units

TABLE 5. SUGGESTED SHAFT TOLERANCE

Shaft Dia.	Tolerance
in. **mm**	in. **mm**
Up thru 1 ½ **35 mm**	+0.0000 to -0.0005 **+0.000 to -0.013**
1 5⁄8 thru 4 **40 thru 100 mm**	+0.0000 to -0.0010 **+0.000 to -0.025**
4 7⁄16 thru 5 **110 thru 125 mm**	+0.0000 to -0.0015 **+0.000 to -0.038**

NOTE: Refer to the Timken Engineering Manual (order no. 10424) for ISO g6, h6 or m6 shaft tolerance data.

TABLE 6. SUGGESTED SET SCREW TIGHTENING TORQUE

Shaft Dia.	Set Screw Size	Tightening Torque
in. **mm**	in.	in. - lbs.
1 3⁄16 thru 1 11⁄16 **35 thru 40 mm**	5⁄16-18	155
1 ¾ thru 2 ½ **45 thru 65 mm**	3⁄8-16	275
2 11⁄16 thru 3 ½ **70 thru 90 mm**	½-13	615
3 15⁄16 thru 5 **100 thru 125 mm**	5⁄8-11	1315

LUBRICATION

To help maintain a rolling bearing's antifriction characteristics, lubrication is needed to:

- Minimize rolling resistance due to deformation of the rolling elements and raceway under load by separating the mating surfaces.
- Minimize sliding friction occurring between rolling elements, raceways and cage.
- Protect from corrosion and, with grease lubrication, from contaminant ingress.

Bearings have been factory prelubricated with Timken Premium All Purpose Industrial Grease, which is an NLGI No. 2 lithium complex-based grease. This is suitable for normal operating conditions. Units should be relubricated with the Timken grease or one that is compatible and made for roller bearings.

It is vital that the greases used are compatible. Please consult with a Timken engineer for the grease specifications if the use of a grease other than the Timken grease mentioned above is needed.

Normal service is considered as operation in a clean, dry environment at temperatures between -34° C to +82° C (-30° F and +180° F). If service is beyond normal conditions due to speed, temperature or exposure to moisture, dirt or corrosive chemicals, periodic relubrication may be advisable. For extreme conditions or conditions in which special chemicals are used, consult your Timken engineer.

After extended storage or periods when the unit is not in operation, fresh grease should be added.

For units operating in dirty or wet environments, the bearing should contain as much grease as possible, based on the shaft speed, to help protect against contamination. For slower applications, with shaft speeds typically less than 200 RPM, the unit should have additional grease added at start-up to fill the bearing.

Lubrication affects the bearing operating temperature as well. If the bearing does not have enough grease, this could lead to higher temperature operation due to inadequate lubrication film thickness. Excessive grease will lead to higher operating temperatures due to grease churning. This can cause bearing overheating. To avoid this, it may be necessary to remove some of the grease inside the unit. The grease fitting may be removed briefly in this circumstance to allow excess grease to purge. The grease fitting must be put back in place. It is best to observe the bearing and its temperature and adjust the lubrication as needed.

Relubrication cycle

Adequate lubrication is an essential element affecting the bearing life. The two primary considerations that determine the relubrication cycle on any application are operating temperature and contamination. Every attempt should be made to maintain seals at peak efficiency.

The higher the temperature, the more rapidly the grease oxidizes. Grease life is reduced by approximately half for every 10° C (18° F) rise in temperature. The higher the operating temperature, the more often the grease must be replenished. Table 7 below can be used as a suggested initial point of reference. Relubrication frequency and quantity intervals are best developed through experience for each application based on types of service, which may differ from the suggestions in table 7 Suggested Relubrication Intervals.

TABLE 7. SUGGESTED RELUBRICATION INTERVALS (BASED ON EIGHT HRS/DAY OPERATION)

Environment	Clean: Un-Exposed			Moderate: Exposed			Extreme: Harsh		
Application Speed[1]	Low	Med.	Hi	Low	Med.	Hi	Low	Med.	Hi
Greasing Interval	1 year	2 months	2 weeks	1 month	2 weeks	[2]	1 week	1 week	[2]

[1]Low < 25% max RPM; 25% < Med. < 75%; 75% < Hi – See table B-5.
[2]Use extra caution due to heat generation.
Relubrication frequency and quantity are best developed through experience.
At all times, follow Original Equipment Manufacturer's maintenance instructions.

When the bearing is not in operation for an extended period of time, grease should be added to prevent corrosion.

Table 7 shows general lubrication suggested starting points only. Please read the entire installation instructions prior to using these tables. Applications should be regularly reviewed and lubrication amounts and intervals modified as needed to assure best results.

TIMKEN® TYPE E TAPERED ROLLER BEARING INTERCHANGE

Timken® Type E tapered roller bearing housed units are available in a wide variety of sizes and configurations to meet the requirements of demanding applications. They are dimensionally interchangeable with current suppliers for all key characteristics, including the bolt hole and shaft centerline dimensions. Popular part numbers are in stock for immediate availability. Metric sizes also are available in shaft diameters ranging from 35 mm to 125 mm.
Contact your Timken engineer for details.



TABLE 8. PILLOW BLOCK: TWO-BOLT BASE

Shaft Size		Timken	Dodge		Sealmaster	Browning	Royersford	Moline
mm	in.	Part No.	Part No.	Part Name	Part No.	Part No.	Part No.	Part No.
	1 3/16	E-P2B-TRB-1 3/16	023000	P2B-E-103R	RPB-103-C2	PBE-920-1 3/16	20-02-0103	19321103
	1 1/4	E-P2B-TRB-1 1/4	023001	P2B-E-104R	RPB-104-C2	PBE-920-1 1/4	20-02-0104	19321104
	1 3/8	E-P2B-TRB-1 3/8	023002	P2B-E-106R	RPB-106-C2	PBE-920-1 3/8	20-02-0106	19321106
	1 7/16	E-P2B-TRB-1 7/16	023003	P2B-E-107R	RPB-107-C2	PBE-920-1 7/16	20-02-0107	19321107
35		E-P2B-TRB-35MM	023620	P2B-E-035MR	RPB-35M-C2	–	25-02-0035	19321035
	1 1/2	E-P2B-TRB-1 1/2	023004	P2B-E-108R	RPB-108-C2	PBE-920-1 1/2	20-02-0108	19321108
	1 5/8	E-P2B-TRB-1 5/8	023005	P2B-E-110R	RPB-110-C2	PBE-920-1 5/8	20-02-0110	19321110
	1 11/16	E-P2B-TRB-1 11/16	023006	P2B-E-111R	RPB-111-C2	PBE-920-1 11/16	20-02-0111	19321111
40		E-P2B-TRB-40MM	023621	P2B-E-040MR	RPB-40M-C2	–	25-02-0040	19321040
	1 3/4	E-P2B-TRB-1 3/4	023007	P2B-E-112R	RPB-112-C2	PBE-920-1 3/4	20-02-0112	19321112
	1 7/8	E-P2B-TRB-1 7/8	023008	P2B-E-114R	–	–	20-02-0114	19321114
	1 15/16	E-P2B-TRB-1 15/16	023009	P2B-E-115R	RPB-115-C2	PBE-920-1 15/16	20-02-0115	19321115
	2	E-P2B-TRB-2	023010	P2B-E-200R	RPB-200-C2	PBE-920-2	20-02-0200	19321200
45		E-P2B-TRB-45MM	023622	P2B-E-045MR	RPB-45M-C2	–	25-02-0045	19321045
50		E-P2B-TRB-50MM	023623	P2B-E-050MR	RPB-5035M-C2	–	25-02-0050	19321050
	2 3/16	E-P2B-TRB-2 3/16	023011	P2B-E-203R	RPB-203-C2	PBE-920-2 3/16	20-02-0203	19321203
55		E-P2B-TRB-55MM	023624	P2B-E-055MR	RPB-55M-C2	–	25-02-0055	19321055
	2 1/4	E-P2B-TRB-2 1/4	023012	P2B-E-204R	RPB-204-C2	PBE-920-2 1/4	20-02-0204	19321204
	2 7/16	E-P2B-TRB-2 7/16	023013	P2B-E-207R	RPB-207-C2	PBE-920-2 7/16	20-02-0207	19321207
	2 1/2	E-P2B-TRB-2 1/2	023014	P2B-E-208R	RPB-208-C2	PBE-920-2 1/2	20-02-0208	19321208
60		E-P2B-TRB-60MM	023625	P2B-E-060MR	RPB-60M-C2	–	25-02-0060	19321060
65		E-P2B-TRB-65MM	023626	P2B-E-065MR	RPB-65M-C2	–	25-02-0065	19321065
	2 11/16	E-P2B-TRB-2 11/16	023015	P2B-E-211R	RPB-211-C2	PBE-920-2 11/16	20-02-0211	19321211
	23/4	E-P2B-TRB-2 3/4	023016	P2B-E-212R	RPB-212-C2	PBE-920-2 3/4	20-02-0212	19321212
	2 15/16	E-P2B-TRB-2 15/16	023017	P2B-E-215R	RPB-215-C2	PBE-920-2 15/16	20-02-0215	19321215
	3	E-P2B-TRB-3	023018	P2B-E-300R	RPB-300-C2	PBE-920-3	20-02-0300	19321300
70		E-P2B-TRB-70MM	023627	P2B-E-070MR	RPB-70M-C2	–	25-02-0070	19321070
75		E-P2B-TRB-75MM	023628	P2B-E-075MR	RPB-75M-C2	–	25-02-0075	19321075
	3 3/16	E-P2B-TRB-3 3/16	023019	P2B-E-303R	RPB-303-C2	PBE-920-3 3/16	20-02-0303	19321303
	3 1/4	E-P2B-TRB-3 1/4	023020	P2B-E-304R	–	–	20-02-0304	19321304
	3 7/16	E-P2B-TRB-3 7/16	023021	P2B-E-307R	RPB-307-C2	PBE-920-3 7/16	20-02-0307	19321307
	3 1/2	E-P2B-TRB-3 1/2	023022	P2B-E-308R	RPB-308-C2	PBE-920-3 1/2	20-02-0308	19321308
80		E-P2B-TRB-80MM	023629	P2B-E-080MR	RPB-80M-C2	–	25-02-0080	19321080
85		E-P2B-TRB-85MM	023630	P2B-E-085MR	RPB-85M-C2	–	25-02-0085	19321085
90		E-P2B-TRB-90MM	023631	P2B-E-090MR	RPB-90M-C2	–	25-02-0090	19321090

TABLE 9. PILLOW BLOCK: FOUR-BOLT BASE



Shaft Size		Timken	Dodge		Sealmaster	Browning	Royersford	Moline
mm	in.	Part No.	Part No.	Part Name	Part No.	Part No.	Part No.	Part No.
	2 1/4	E-P4B-TRB-2 1/4	023023	P4B-E-204R	RPB-204-C4	PBE-920F-2 1/4	20-04-0204	19341204
	2 7/16	E-P4B-TRB-2 7/16	023024	P4B-E-207R	RPB-207-C4	PBE-920F-2 7/16	20-04-0207	19341207
	2 1/2	E-P4B-TRB-2 1/2	023025	P4B-E-208R	RPB-208-C4	PBE-920F-2 1/2	20-04-0208	19341208
60		E-P4B-TRB-60MM	–	–	RPB-60M-C4	–	25-04-0060	19341060
65		E-P4B-TRB-65MM	–	–	RPB-65M-C4	–	25-04-0065	19341065
	2 11/16	E-P4B-TRB-2 11/16	023026	P4B-E-211R	RPB-211-C4	PBE-920F-2 11/16	20-04-0211	19341211
	2 3/4	E-P4B-TRB-2 3/4	023027	P4B-E-212R	RPB-212-C4	PBE-920F-2 3/4	20-04-0212	19341212
	2 15/16	E-P4B-TRB-2 15/16	023028	P4B-E-215R	RPB-215-C4	PBE-920F-2 15/16	20-04-0215	19341215
	3	E-P4B-TRB-3	023029	P4B-E-300R	RPB-300-C4	PBE-920F-3	20-04-0300	19341300
70		E-P4B-TRB-70MM	–	–	RPB-70M-C4	–	25-04-0070	19341070
75		E-P4B-TRB-75MM	–	–	RPB-75M-C4	–	25-04-0075	19341075
	3 3/16	E-P4B-TRB-3 3/16	023030	P4B-E-303R	RPB-303-C4	PBE-920F-3 3/16	20-04-0303	19341303
	3 1/4	E-P4B-TRB-3 1/4	023031	P4B-E-304R	–	–	20-04-0304	19341304
	3 7/16	E-P4B-TRB-3 7/16	023032	P4B-E-307R	RPB-307-C4	PBE-920F-3 7/16	20-04-0307	19341307
	3 1/2	E-P4B-TRB-3 1/2	023033	P4B-E-308R	RPB-308-C4	PBE-920F-3 1/2	20-04-0308	19341308
80		E-P4B-TRB-80MM	–	–	RPB-80M-C4	–	25-04-0080	19341080
85		E-P4B-TRB-85MM	–	–	RPB-85M-C4	–	25-04-0085	19341085
90		E-P4B-TRB-90MM	–	–	RPB-90M-C4	–	25-04-0090	19341090
	3 15/16	E-P4B-TRB-3 15/16	023690	P4B-E-315R	RPB-315-C4	PBE-920F-3 15/16	20-04-0315	19341315
	4	E-P4B-TRB-4	023691	P4B-E-400R	RPB-400-C4	PBE-920F-4	20-04-0400	19341400
100		E-P4B-TRB-100MM	023632	P4B-E-100MR	RPB-100M-C4	–	25-04-0100	19341100
	4 7/16	E-P4B-TRB-4 7/16	023692	P4B-E-407R	RPB-407-C4	PBE-920F-4 7/16	20-04-0407	19341407
	4 1/2	E-P4B-TRB-4 1/2	023693	P4B-E-408R	RPB-408-C4	PBE-920F-4 1/2	20-04-0408	19341408
110		E-P4B-TRB-110MM	023633	P4B-E-110MR	RPB-110M-C4	–	25-04-0110	19341110
115		E-P4B-TRB-115MM	023634	P4B-E-115MR	RPB-115M-C4	–	25-04-0115	19341115
	4 15/16	E-P4B-TRB-4 15/16	023694	P4B-E-415R	RPB-415-C4	PBE-920F-4 15/16	20-04-0415	19341415
	5	E-P4B-TRB-5	023695	P4B-E-500R	RPB-500-C4	PBE-920F-5	20-04-0500	19341500
125		E-P4B-TRB-125MM	023635	P4B-E-125MR	RPB-125M-C4	–	25-04-0125	19341125

TABLE 10. FLANGE: FOUR-BOLT



Shaft Size		Timken	Dodge		Sealmaster	Browning	Royersford	Moline
mm	in.	Part No.	Part No.	Part Name	Part No.	Part No.	Part No.	Part No.
	1 3/16	E-4BF-TRB-1 3/16	023093	F4B-E-103R	RFB-103 or -C	FBE-920-1 3/16	20-05-0103	19311103
	1 1/4	E-4BF-TRB-1 1/4	023094	F4B-E-104R	RFB-104	FBE-920-1 1/4	20-05-0104	19311104
	1 3/8	E-4BF-TRB-1 3/8	023095	F4B-E-106R	RFB-106	FBE-920-1 3/8	20-05-0106	19311106
	1 7/16	E-4BF-TRB-1 7/16	023096	F4B-E-107R	RFB-107	FBE-920-1 7/16	20-05-0107	19311107
35		E-4BF-TRB-35MM	–	F4B-E-035MR	RFB-35M	–	25-05-0035	19311035
	1 1/2	E-4BF-TRB-1 1/2	023097	F4B-E-108R	RFB-108	FBE-920-1 1/2	20-05-0108	19311108
	1 5/8	E-4BF-TRB-1 5/8	023098	F4B-E-110R	RFB-110	FBE-920-1 5/8	20-05-0110	19311110
	1 11/16	E-4BF-TRB-1 11/16	023099	F4B-E-111R	RFB-111	FBE-920-1 11/16	20-05-0111	19311111
40		E-4BF-TRB-40MM	–	F4B-E-040MR	RFB-40M	–	25-05-0040	19311040
	1 3/4	E-4BF-TRB-1 3/4	023100	F4B-E-112R	RFB-112	FBE-920-1 3/4	20-05-0112	19311112
	1 7/8	E-4BF-TRB-1 7/8	023101	F4B-E-114R	–	–	20-05-0114	19311114
	1 15/16	E-4BF-TRB-1 15/16	023102	F4B-E-115R	RFB-115	FBE-920-1 15/16	20-05-0115	19311115
	2	E-4BF-TRB-2	023103	F4B-E-200R	RFB-200	FBE-920-2	20-05-0200	19311200
45		E-4BF-TRB-45MM	–	F4B-E-045MR	RFB-45M	–	25-05-0045	19311045
50		E-4BF-TRB-50MM	–	F4B-E-050MR	RFB-50M	–	25-05-0050	19311050
	2 3/16	E-4BF-TRB-2 3/16	023104	F4B-E-203R	RFB-203	FBE-920-2 3/16	20-05-0203	19311203
55		E-4BF-TRB-55MM	–	F4B-E-055MR	RFB-55M	–	25-05-0055	19311055
	2 1/4	E-4BF-TRB-2 1/4	023105	F4B-E-204R	RFB-204	FBE-920-2 1/4	20-05-0204	19311204
	2 7/16	E-4BF-TRB-2 7/16	023106	F4B-E-207R	RFB-207	FBE-920-2 7/16	20-05-0207	19311207
	2 1/2	E-4BF-TRB-2 1/2	023107	F4B-E-208R	RFB-208	FBE-920-2 1/2	20-05-0208	19311208
60		E-4BF-TRB-60MM	–	F4B-E-060MR	RFB-60M	–	25-05-0060	19311060
65		E-4BF-TRB-65MM	–	F4B-E-065MR	RFB-65M	–	25-05-0065	19311065
	2 11/16	E-4BF-TRB-2 11/16	023108	F4B-E-211R	RFB-211	FBE-920-2 11/16	20-05-0211	19311211
	2 3/4	E-4BF-TRB-2 3/4	023109	F4B-E-212R	RFB-212	FBE-920-2 3/4	20-05-0212	19311212
	2 15/16	E-4BF-TRB-2 15/16	023110	F4B-E-215R	RFB-215	FBE-920-2 15/16	20-05-0215	19311215
	3	E-4BF-TRB-3	023111	F4B-E-300R	RFB-300	FBE-920-3	20-05-0300	19311300
70		E-4BF-TRB-70MM	–	F4B-E-070MR	RFB-70M	–	25-05-0070	19311070
75		E-4BF-TRB-75MM	–	F4B-E-075MR	RFB-75M	–	25-05-0075	19311075
	3 3/16	E-4BF-TRB-3 3/16	023112	F4B-E-303R	RFB-303	FBE-920-3 3/16	20-05-0303	19311303
	3 1/4	E-4BF-TRB-3 1/4	023113	F4B-E-304R	–	–	20-05-0304	19311304
	3 7/16	E-4BF-TRB-3 7/16	023114	F4B-E-307R	RFB-307	FBE-920-3 7/16	20-05-0307	19311307
	3 1/2	E-4BF-TRB-3 1/2	023115	F4B-E-308R	RFB-308	FBE-920-3 1/2	20-05-0308	19311308
80		E-4BF-TRB-80MM	–	F4B-E-080MR	RFB-80M	–	25-05-0080	19311080
85		E-4BF-TRB-85MM	–	F4B-E-085MR	RFB-85M	–	25-05-0085	19311085
90		E-4BF-TRB-90MM	–	F4B-E-090MR	RFB-90M	–	25-05-0090	19311090
	3 15/16	E-4BF-TRB-3 15/16	023116	F4B-E-315R	RFB-315	FBE-920F-3 15/16	20-04-0315	19311315
	4	E-4BF-TRB-4	023117	F4B-E-400R	RFB-400	FBE-920F-4	20-04-0400	19311400
100		E-4BF-TRB-100MM	–	F4B-E-100MR	RFB-100M	–	25-05-0100	19311100
	4 7/16	E-4BF-TRB-4 7/16	023118	F4B-E-407R	RFB-407	–	20-04-0407	19311407
	4 1/2	E-4BF-TRB-4 1/2	023119	F4B-E-408R	RFB-408	–	20-04-0408	19311408
110		E-4BF-TRB-110MM	–	F4B-E-110MR	–	–	25-05-0110	19311110m
115		E-4BF-TRB-115MM	–	F4B-E-115MR	–	–	25-05-0115	19311115m

TABLE 11. FLANGE: PILOTED



Shaft Size		Timken	Dodge		Sealmaster	Browning	Royersford	Moline
mm	in.	Part No.	Part No.	Part Name	Part No.	Part No.	Part No.	Part No.
	1 3/16	E-PF-TRB-1 3/16	023120	FC-E-103R	RFP-103 or -C	–	20-06-0103	–
	1 1/4	E-PF-TRB-1 1/4	023121	FC-E-104R	RFP-104	–	20-06-0104	–
	1 3/8	E-PF-TRB-1 3/8	023122	FC-E-106R	RFP-106	–	20-06-0106	–
	1 7/16	E-PF-TRB-1 7/16	023123	FC-E-107R	RFP-107	–	20-06-0107	–
35		E-PF-TRB-35MM	–	FC-E-035MR	RFP-35M	–	25-06-0035	–
	1 1/2	E-PF-TRB-1 1/2	023124	FC-E-108R	RFP-108	–	20-06-0108	–
	1 5/8	E-PF-TRB-1 5/8	023125	FC-E-110R	RFP-110	–	20-06-0110	–
	1 11/16	E-PF-TRB-1 11/16	023126	FC-E-111R	RFP-111	–	20-06-0111	–
40		E-PF-TRB-40MM	–	FC-E-040MR	RFP-40M	–	25-06-0040	–
	1 3/4	E-PF-TRB-1 3/4	023127	FC-E-112R	RFP-112	–	20-06-0112	19331112
	1 7/8	E-PF-TRB-1 7/8	023128	FC-E-114R	–	–	20-06-0114	19331114
	1 15/16	E-PF-TRB-1 15/16	023129	FC-E-115R	RFP-115	–	20-06-0115	19331115
	2	E-PF-TRB-2	023130	FC-E-200R	RFP-200	–	20-06-0200	19331200
45		E-PF-TRB-45MM	–	FC-E-045MR	RFP-45M	–	25-06-0045	19331045
50		E-PF-TRB-50MM	–	FC-E-050MR	RFP-50M	–	25-06-0050	19331050
	2 3/16	E-PF-TRB-2 3/16	023131	FC-E-203R	RFP-203	–	20-06-0203	19331203
55		E-PF-TRB-55MM	-	FC-E-055MR	RFP-55M	–	25-06-0055	19331055
	2 1/4	E-PF-TRB-2 1/4	023132	FC-E-204R	RFP-204	–	20-06-0204	19331204
	2 7/16	E-PF-TRB-2 7/16	023133	FC-E-207R	RFP-207	–	20-06-0207	19331207
	2 1/2	E-PF-TRB-2 1/2	023134	FC-E-208R	RFP-208	–	20-06-0208	19331208
60		E-PF-TRB-60MM	–	FC-E-060MR	RFP-60M	–	25-06-0060	19331060
65		E-PF-TRB-65MM	–	FC-E-065MR	RFP-65M	–	25-06-0065	19331065
	2 11/16	E-PF-TRB-2 11/16	023135	FC-E-211R	RFP-211	–	20-06-0211	19331211
	2 3/4	E-PF-TRB-2 3/4	023136	FC-E-212R	RFP-212	–	20-06-0212	19331212
	2 15/16	E-PF-TRB-2 15/16	023137	FC-E-215R	RFP-215	–	20-06-0215	19331215
	3	E-PF-TRB-3	023138	FC-E-300R	RFP-300	–	20-06-0300	19331300
70		E-PF-TRB-70MM	–	FC-E-070MR	RFP-70M	–	25-06-0070	19331070
75		E-PF-TRB-75MM	–	FC-E-075MR	RFP-75M	–	25-06-0075	19331075
	3 3/16	E-PF-TRB-3 3/16	023139	FC-E-303R	RFP-303	–	20-06-0303	19331303
	3 1/4	E-PF-TRB-3 1/4	023140	FC-E-304R	–	–	20-06-0304	19331304
	3 7/16	E-PF-TRB-3 7/16	023141	FC-E-307R	RFP-307	–	20-06-0307	19331307
	3 1/2	E-PF-TRB-3 1/2	023142	FC-E-308R	RFP-308	–	20-06-0308	19331308
80		E-PF-TRB-80MM	–	FC-E-080MR	RFP-80M	–	25-06-0080	19331080
85		E-PF-TRB-85MM	–	FC-E-085MR	RFP-85M	–	25-06-0085	19331085
90		E-PF-TRB-90MM	–	FC-E-090MR	RFP-90M	–	25-06-0090	19331090
	3 15/16	E-PF-TRB-3 15/16	023143	FC-E-315R	RFP-315	–	20-06-0315	19331315
	4	E-PF-TRB-4	023144	FC-E-400R	RFP-400	–	20-06-0400	19331400
100		E-PF-TRB-100MM	–	FC-E-100MR	RFP-100M	–	25-06-0100	19331100
	4 7/16	E-PF-TRB-4 7/16	023145	FC-E-407R	RFP-407	–	20-06-0407	19331407
	4 1/2	E-PF-TRB-4 1/2	023146	FC-E-408R	RFP-408	–	20-06-0408	19331408
110		E-PF-TRB-110MM	–	FC-E-110MR	RFP-110M	–	25-06-0110	19331110
115		E-PF-TRB-115MM	–	FC-E-115MR	RFP-115M	–	25-06-0115	19331115M
	4 15/16	E-PF-TRB-4 15/16	023147	FC-E-415R	RFP-415	–	20-06-0415	19331415
	5	E-PF-TRB-5	023148	FC-E-500R	RFP-500	–	20-06-0500	19331500
125		E-PF-TRB-125MM	–	FC-E-125MR	RFP-125M	–	25-06-0125	19331125

TABLE 12. TAKE-UP: WIDE SLOT



Shaft Size		Timken	Dodge		Sealmaster	Browning	Royersford	Moline
mm	in.	Part No.	Part No.	Part Name	Part No.	Part No.	Part No.	Part No.
	1 3/8	E-TU-TRB-1 3/8	023076	WSTU-E-106R	–	TUE-920-1 3/8	20-07-0106	–
	1 7/16	E-TU-TRB-1 7/16	023077	WSTU-E-107R	–	TUE-920-1 7/16	20-07-0107	–
35		E-TU-TRB-35MM	–	WSTU-E-035MR	–	–	25-07-0035	–
	1 1/2	E-TU-TRB-1 1/2	023078	WSTU-E-108R	–	TUE-920-1 1/2	20-07-0108	–
	1 5/8	E-TU-TRB-1 5/8	023079	WSTU-E-110R	–	–	20-07-0110	–
	1 11/16	E-TU-TRB-1 11/16	023080	WSTU-E-111R	–	TUE-920-1 11/16	20-07-0111	–
40		E-TU-TRB-40MM	–	WSTU-E-040MR	–	–	25-07-0040	–
	1 3/4	E-TU-TRB-1 3/4	023081	WSTU-E-112R	–	TUE-920-1 3/4	20-07-0112	19351112
	1 7/8	E-TU-TRB-1 7/8	023082	WSTU-E-114R	–	–	20-07-0114	19351114
	1 15/16	E-TU-TRB-1 15/16	023083	WSTU-E-115R	–	TUE-920-1 15/16	20-07-0115	19351115
	2	E-TU-TRB-2	023084	WSTU-E-200R	–	TUE-920-2	20-07-0200	19351200
45		E-TU-TRB-45MM	–	WSTU-E-045MR	–	–	25-07-0040	19351045
50		E-TU-TRB-50MM	–	WSTU-E-050MR	–	–	25-07-0045	19351050
	2 3/16	E-TU-TRB-2 3/16	023085	WSTU-E-203R	–	TUE-920-2 3/16	20-07-0203	19351203
55		E-TU-TRB-55MM	–	WSTU-E-055MR	–	–	25-07-0050	19351055
	2 1/4	E-TU-TRB-2 1/4	023086	WSTU-E-204R	–	–	20-07-0204	19351204
	2 7/16	E-TU-TRB-2 7/16	023087	WSTU-E-207R	–	TUE-920-2 7/16	20-07-0207	19351207
	2 1/2	E-TU-TRB-2 1/2	023088	WSTU-E-208R	–	TUE-920-2 1/2	20-07-0208	19351208
60		E-TU-TRB-60MM	–	WSTU-E-060MR	–	–	25-07-0060	19351060
65		E-TU-TRB-65MM	–	WSTU-E-065MR	–	–	25-07-0065	19351065
	2 11/16	E-TU-TRB-2 11/16	023089	WSTU-E-211R	–	TUE-920-2 11/16	20-07-0211	19351211
	2 3/4	E-TU-TRB-2 3/4	023090	WSTU-E-212R	–	TUE-920-2 3/4	20-07-0212	19351212
	2 15/16	E-TU-TRB-2 15/16	023091	WSTU-E-215R	–	TUE-920-2 15/16	20-07-0215	19351215
	3	E-TU-TRB-3	023092	WSTU-E-300R	–	–	20-07-0300	19351300
70		E-TU-TRB-70MM	–	WSTU-E-070MR	–	–	25-07-0070	19351070
75		E-TU-TRB-75MM	–	WSTU-E-075MR	–	–	25-07-0075	19351075
70		E-PF-TRB-70MM	–	FC-E-070MR	RFP-70M	–	25-06-0070	19331070
75		E-PF-TRB-75MM	–	FC-E-075MR	RFP-75M	–	25-06-0075	19331075

TABLE 13. TAKE-UP: TOP ANGLE



Shaft Size		Timken	Dodge		Sealmaster	Browning	Royersford	Moline
mm	in.	Part No.	Part No.	Part Name	Part No.	Part No.	Part No.	Part No.
	1 3/4	E-TTU-TRB-1 3/4	023149	TP-E-112R	–	–	–	–
	1 7/8	E-TTU-TRB-1 7/8	023150	TP-E-114R	–	–	–	–
	1 15/16	E-TTU-TRB-1 15/16	023151	TP-E-115R	–	–	–	–
	2	E-TTU-TRB-2	023152	TP-E-200R	–	–	–	–
45		E-TTU-TRB-45MM	–	TP-E-045MR	–	–	–	–
50		E-TTU-TRB-50MM	–	TP-E-050MR	–	–	–	–
	2 3/16	E-TTU-TRB-2 3/16	023153	TP-E-203R	–	–	–	–
55		E-TTU-TRB-55MM	–	TP-E-055MR	–	–	–	–
	2 1/4	E-TTU-TRB-2 1/4	023154	TP-E-204R	–	–	–	–
	2 7/16	E-TTU-TRB-2 7/16	023155	TP-E-207R	–	–	–	–
	2 1/2	E-TTU-TRB-2 1/2	023156	TP-E-208R	–	–	–	–
60		E-TTU-TRB-60MM	–	TP-E-060MR	–	–	–	–
65		E-TTU-TRB-65MM	–	TP-E-065MR	–	–	–	–
	2 11/16	E-TTU-TRB-2 11/16	023157	TP-E-211R	–	–	–	–
	2 3/4	E-TTU-TRB-2 3/4	023158	TP-E-212R	–	–	–	–
	2 15/16	E-TTU-TRB-2 15/16	023159	TP-E-215R	–	–	–	–
	3	E-TTU-TRB-3	023160	TP-E-300R	–	–	–	–
70		E-TTU-TRB-70MM	–	TP-E-070MR	–	–	–	–
75		E-TTU-TRB-75MM	–	TP-E-075MR	–	–	–	–
	3 3/16	E-TTU-TRB-3 3/16	023161	TP-E-303R	–	–	–	–
	3 1/4	E-TTU-TRB-3 1/4	023162	TP-E-304R	–	–	–	–
	3 7/16	E-TTU-TRB-3 7/16	023163	TP-E-307R	–	–	–	–
	3 1/2	E-TTU-TRB-3 1/2	023164	TP-E-308R	–	–	–	–
80		E-TTU-TRB-80MM	–	TP-E-080MR	–	–	–	–
85		E-TTU-TRB-85MM	–	TP-E-085MR	–	–	–	–
90		E-TTU-TRB-90MM	–	TP-E-090MR	–	–	–	–
	3 15/16	E-TTU-TRB-3 15/16	023165	TP-E-315R	–	–	–	–
	4	E-TTU-TRB-4	023166	TP-E-400R	–	–	–	–
100		E-TTU-TRB-100MM	–	TP-E-100MR	–	–	–	–

⚠ WARNING

Failure to observe the following warnings could create a risk of death or serious injury.

Proper maintenance and handling practices are critical. Always follow installation instructions and maintain proper lubrication.

Overheated bearings can ignite explosive atmospheres. Special care must be taken to properly select, install, maintain, and lubricate housed unit bearings that are used in or near atmospheres that may contain explosive levels of combustible gases or accumulations of dust such from grain, coal, or other combustible materials. Consult your equipment designer or supplier for installation and maintenance instructions.

If hammer and bar are used for installation or removal of a part, use a mild steel bar (e.g., 1010 or 1020 grade). Mild steel bars are less likely to cause release of high-speed fragments from the hammer, bar or the part being removed.

CAUTION

Failure to follow these cautions may result in property damage.

Do not use damaged housed units.

Warnings for this product line are in this catalog and posted on www.timken.com/warnings.

NOTE

Do not use excessive force when mounting or dismounting the unit.

Follow all tolerance, fit, and torque recommendations.

Always follow the Original Equipment Manufacturer's installation and maintenance guidelines.

Ensure proper alignment.

Never weld housed units.

Do not heat components with an open flame.

Do not operate at bearing temperatures above 121° C (250° F).

DISCLAIMER

This catalog is provided solely to give you analysis tools and data to assist you in your product selection. Product performance is affected by many factors beyond the control of Timken. Therefore, you must validate the suitability and feasibility of all product selections for your applications.

Timken products are sold subject to Timken terms and conditions of sale, which include our limited warranty and remedy. You can find these at www.timken.com/termsandconditionsofsale.

Please consult with your Timken engineer for more information and assistance.

Every reasonable effort has been made to ensure the accuracy of the information in this writing, but no liability is accepted for errors, omissions or for any other reason.

Updates are made periodically to this catalog. Visit www.timken.com for the most recent version of the Timken® Housed Unit Catalog.

4.5M 05-16 :29 Order No. 10348 | Timken® is a registered trademark of The Timken Company. | © 2016 The Timken Company | Printed in U.S.A.

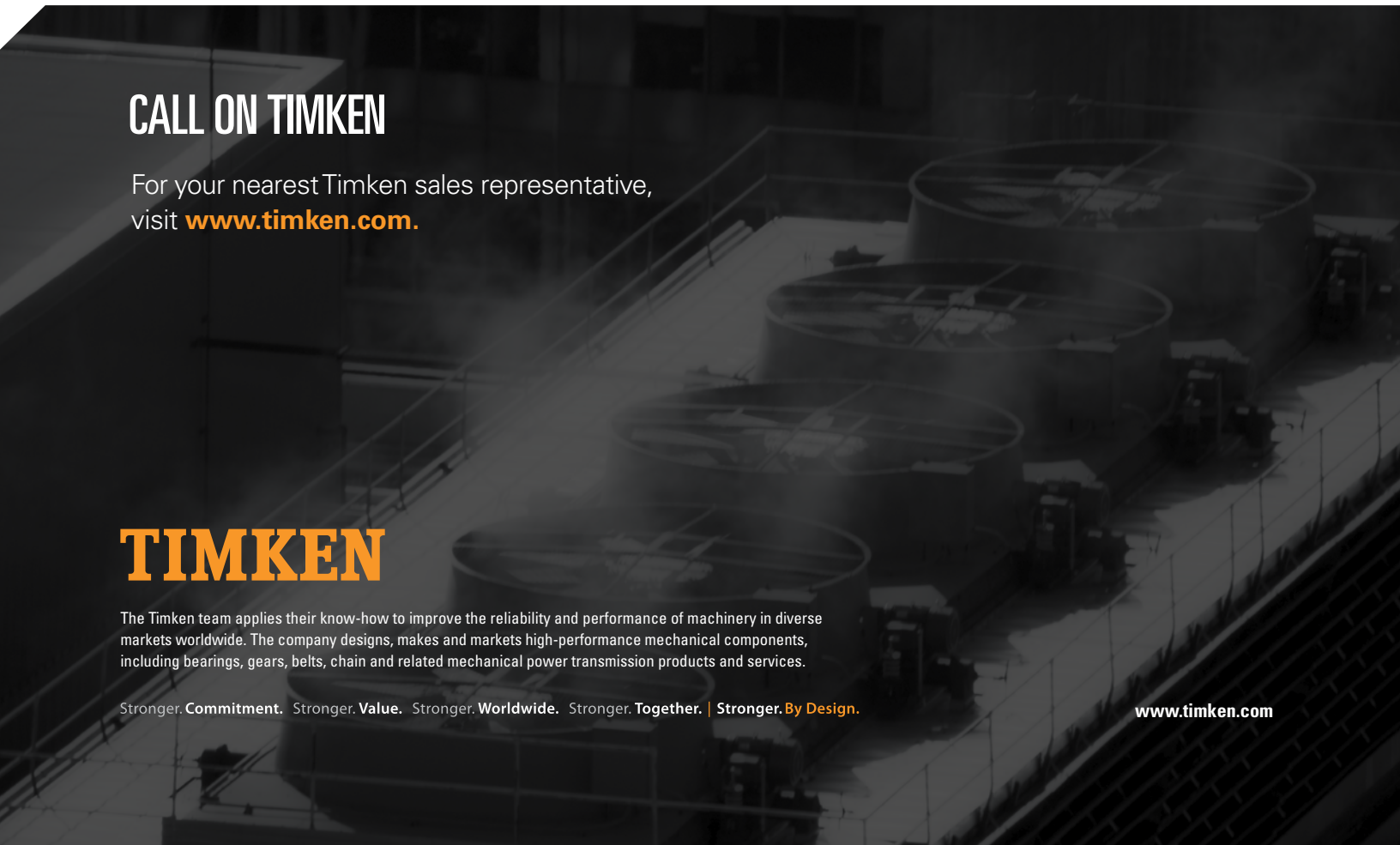

CALL ON TIMKEN

For your nearest Timken sales representative, visit **www.timken.com.**

TIMKEN

The Timken team applies their know-how to improve the reliability and performance of machinery in diverse markets worldwide. The company designs, makes and markets high-performance mechanical components, including bearings, gears, belts, chain and related mechanical power transmission products and services.

Stronger. **Commitment.** Stronger. **Value.** Stronger. **Worldwide.** Stronger. **Together.** | **Stronger.** By Design.

www.timken.com