The Timken Company
4500 Mt Pleasant St. NW
N. Canton, OH 44720
Phone: (234) 262-3000
E-Mail: CustomerCAD@timken.com • **Web site:** www.timken.com

Timken Part Number JP6049 - JP6010, Tapered Roller Bearings - TS (Tapered Single) Metric

This is the most basic and most widely used type of tapered roller bearing. It consists of two main separable parts: the cone (inner ring) assembly and the cup (outer ring). It is typically mounted in opposing pairs on a shaft.



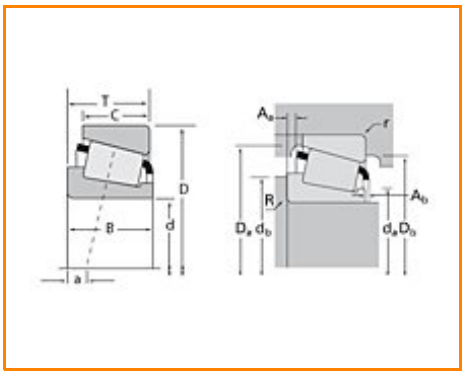

Specifications | Dimensions | Abutment and Fillet Dimensions | Basic Load Ratings | Factors

Specifications

Series	JP6000
Cone Part Number	JP6049
Cup Part Number	JP6010
Design Units	METRIC
Bearing Weight	0.600 Kg 1.30 lb
Cage Type	Stamped Steel

Dimensions

d - Bore	60.000 mm 2.3622 in

D - Cup Outer Diameter	100.000 mm 3.9370 in
B - Cone Width	20.000 mm 0.7874 in
C - Cup Width	15.500 mm 0.6102 in
T - Bearing Width	21.000 mm 0.8268 in

Abutment and Fillet Dimensions

R - Cone Backface "To Clear" Radius[1]	2.030 mm 0.080 in
r - Cup Backface "To Clear" Radius[2]	2.03 mm 0.08 in
da - Cone Frontface Backing Diameter	66.04 mm 2.60 in
db - Cone Backface Backing Diameter	69.09 mm 2.72 in
Da - Cup Frontface Backing Diameter	96.00 mm 3.78 in
Db - Cup Backface Backing Diameter	90.93 mm 3.58 in
Ab - Cage-Cone Frontface Clearance	3.6 mm 0.14 in
Aa - Cage-Cone Backface Clearance	0.8 mm 0.03 in
a - Effective Center Location[3]	1.3 mm 0.05 in

Basic Load Ratings

C90 - Dynamic Radial Rating (90 million revolutions)[4]	22600 N 5090 lbf
C1 - Dynamic Radial Rating (1 million revolutions)[5]	87300 N 19600 lbf
C0 - Static Radial Rating	101000 N 22800 lbf
C_{a90} - Dynamic Thrust Rating (90 million revolutions)[6]	18300 N 4120 lbf

Factors

K - Factor[7]	1.24
e - ISO Factor[8]	0.47
Y - ISO Factor[9]	1.27
G1 - Heat Generation Factor (Roller-Raceway)	39.5
G2 - Heat Generation Factor (Rib-Roller End)	22.5
Cg - Geometry Factor	0.0922

[1] These maximum fillet radii will be cleared by the bearing corners.
[2] These maximum fillet radii will be cleared by the bearing corners.
[3] Negative value indicates effective center inside cone backface.
[4] Based on 90 x 10^6 revolutions L_{10} life, for The Timken Company life calculation method. C_{90} and C_{a90} are radial and thrust values.
[5] Based on 1 x 10^6 revolutions L_{10} life, for the ISO life calculation method.
[6] Based on 90 x 10^6 revolutions L_{10} life, for The Timken Company life calculation method. C_{90} and C_{a90} are radial and thrust values for a single-row, $C_{90(2)}$ is the two-row radial value.
[7] These factors apply for both inch and metric calculations. Consult your Timken representative for instruction on use.
[8] These factors apply for both inch and metric calculations. Consult your Timken representative for instruction on use.
[9] These factors apply for both inch and metric calculations. Consult your Timken representative for instruction on use.

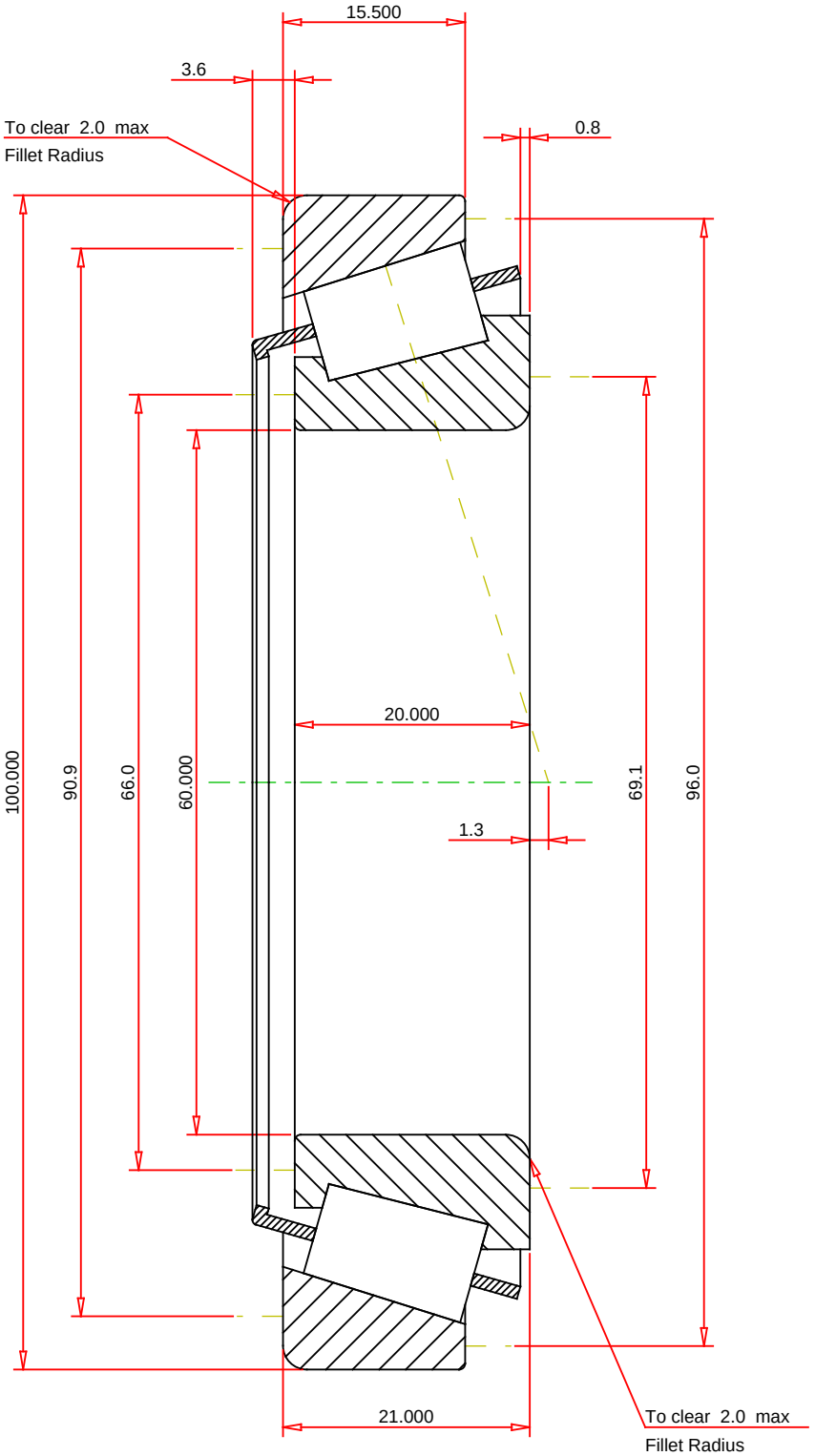

METRIC UNITS

ISO Factor - e	0.47	
ISO Factor - Y	1.27	
Bearing Weight	0.6	kg
Number of Rollers Per Row	19	
Effective Center Location	1.3	mm

TIMKEN®

THE TIMKEN COMPANY
NORTH CANTON, OHIO USA

JP6049 - JP6010
TS BEARING ASSEMBLY

K Factor	1.24	
Dynamic Radial Rating - C90	22600	N
Dynamic Thrust Rating - Ca90	18300	N
Static Radial Rating - C0	101000	N
Dynamic Radial Rating - C1	87300	N

Every reasonable effort has been made to ensure the accuracy of the information contained in this writing, but no liability is accepted for errors, omissions or for any other reason.

FOR DISCUSSION ONLY