The Timken Company
4500 Mt Pleasant St. NW
N. Canton, OH 44720
Phone: (234) 262-3000
E-Mail: CustomerCAD@timken.com • **Web site:** www.timken.com

Timken Part Number JHM88540 - JHM88513, Tapered Roller Bearings - TS (Tapered Single) Metric

This is the most basic and most widely used type of tapered roller bearing. It consists of two main separable parts: the cone (inner ring) assembly and the cup (outer ring). It is typically mounted in opposing pairs on a shaft.



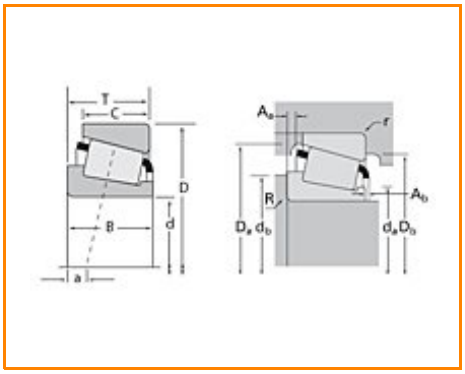

Specifications | Dimensions | Abutment and Fillet Dimensions | Basic Load Ratings | Factors

Specifications

Series	HM88500
Cone Part Number	JHM88540
Cup Part Number	JHM88513
Design Units	METRIC
Bearing Weight	0.600 Kg 1.30 lb
Cage Type	Stamped Steel

Dimensions

d - Bore	30 mm 1.1811 in
D - Cup Outer Diameter	72.000 mm 2.8346 in
B - Cone Width	27.783 mm 1.0938 in
C - Cup Width	23.020 mm 0.9063 in
T - Bearing Width	29.370 mm 1.1563 in

Abutment and Fillet Dimensions

R - Cone Backface "To Clear" Radius[1]	1.270 mm 0.050 in
r - Cup Backface "To Clear" Radius[2]	3.30 mm 0.130 in
da - Cone Frontface Backing Diameter	42.42 mm 1.67 in
db - Cone Backface Backing Diameter	44.45 mm 1.75 in
Da - Cup Frontface Backing Diameter	69.10 mm 2.74 in
Db - Cup Backface Backing Diameter	57.91 mm 2.28 in
Ab - Cage-Cone Frontface Clearance	2.3 mm 0.09 in
Aa - Cage-Cone Backface Clearance	1.5 mm 0.06 in
a - Effective Center Location[3]	-5.60 mm -0.22 in

Basic Load Ratings

C90 - Dynamic Radial Rating (90 million revolutions)[4]	22600 N 5070 lbf
C1 - Dynamic Radial Rating (1 million revolutions)[5]	87000 N 19600 lbf
C0 - Static Radial Rating	111000 N 24900 lbf
C_{a90} - Dynamic Thrust Rating (90 million revolutions)[6]	21100 N 4740 lbf

Factors

K - Factor[7]	1.07
e - ISO Factor[8]	0.55
Y - ISO Factor[9]	1.1
G1 - Heat Generation Factor (Roller-Raceway)	26.3
G2 - Heat Generation Factor (Rib-Roller End)	11.7
Cg - Geometry Factor	0.0857

[1] These maximum fillet radii will be cleared by the bearing corners.

[2] These maximum fillet radii will be cleared by the bearing corners.

[3] Negative value indicates effective center inside cone backface.

[4] Based on 90 x 10^6 revolutions L_{10} life, for The Timken Company life calculation method. C_{90} and C_{a90} are radial and thrust values.

[5] Based on 1 x 10^6 revolutions L_{10} life, for the ISO life calculation method.

[6] Based on 90 x 10^6 revolutions L_{10} life, for The Timken Company life calculation method. C_{90} and C_{a90} are radial and thrust values for a single-row, $C_{90(2)}$ is the two-row radial value.

[7] These factors apply for both inch and metric calculations. Consult your Timken representative for instruction on use.

[8] These factors apply for both inch and metric calculations. Consult your Timken representative for instruction

on use.

[9] These factors apply for both inch and metric calculations. Consult your Timken representative for instruction on use.

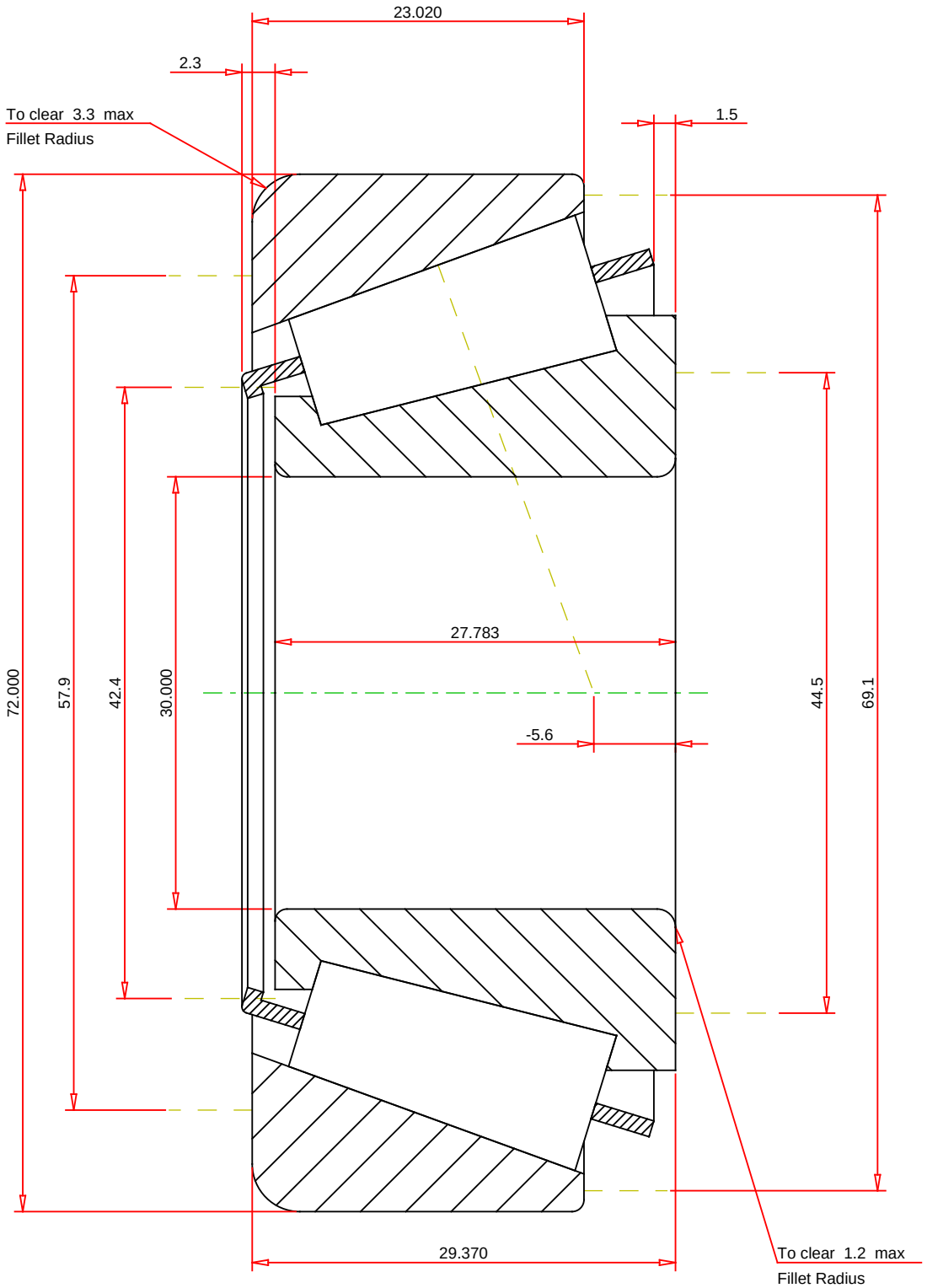

METRIC UNITS

ISO Factor - e	0.55	
ISO Factor - Y	1.1	
Bearing Weight	0.6	kg
Number of Rollers Per Row	18	
Effective Center Location	-5.6	mm

TIMKEN®

THE TIMKEN COMPANY
NORTH CANTON, OHIO USA

JHM88540 - JHM88513
TS BEARING ASSEMBLY

K Factor	1.07	
Dynamic Radial Rating - C90	22600	N
Dynamic Thrust Rating - Ca90	21100	N
Static Radial Rating - C0	111000	N
Dynamic Radial Rating - C1	87000	N

Every reasonable effort has been made to ensure the accuracy of the information contained in this writing, but no liability is accepted for errors, omissions or for any other reason.

FOR DISCUSSION ONLY