The Timken Company
4500 Mt Pleasant St. NW
N. Canton, OH 44720
Phone: (234) 262-3000
E-Mail: CustomerCAD@timken.com • **Web site:** www.timken.com

Timken Part Number JHM534149 - JHM534110, Tapered Roller Bearings - TS (Tapered Single) Metric

This is the most basic and most widely used type of tapered roller bearing. It consists of two main separable parts: the cone (inner ring) assembly and the cup (outer ring). It is typically mounted in opposing pairs on a shaft.



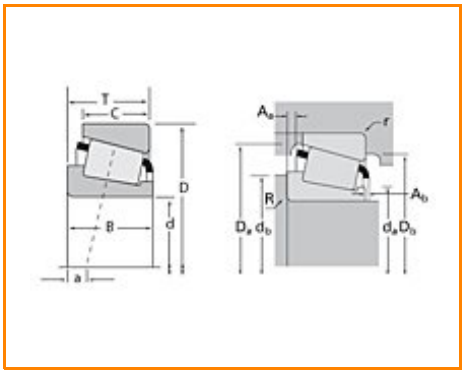

Specifications | Dimensions | Abutment and Fillet Dimensions | Basic Load Ratings | Factors

Specifications

Series	HM534100
Cone Part Number	JHM534149
Cup Part Number	JHM534110
Design Units	METRIC
Bearing Weight	4.300 Kg 9.50 lb
Cage Type	Stamped Steel

Dimensions

d - Bore	170 mm 6.6929 in
D - Cup Outer Diameter	230.000 mm 9.0551 in
B - Cone Width	38.000 mm 1.4961 in
C - Cup Width	31.000 mm 1.2205 in
T - Bearing Width	39.000 mm 1.5354 in

Abutment and Fillet Dimensions

R - Cone Backface "To Clear" Radius[1]	3.050 mm 0.12 in
r - Cup Backface "To Clear" Radius[2]	2.54 mm 0.1 in
da - Cone Frontface Backing Diameter	178.05 mm 7.01 in
db - Cone Backface Backing Diameter	183.90 mm 7.24 in
Da - Cup Frontface Backing Diameter	224.54 mm 8.84 in
Db - Cup Backface Backing Diameter	216.92 mm 8.54 in
Ab - Cage-Cone Frontface Clearance	4.1 mm 0.16 in
Aa - Cage-Cone Backface Clearance	0.5 mm 0.02 in
a - Effective Center Location[3]	4.6 mm 0.18 in

Basic Load Ratings

C90 - Dynamic Radial Rating (90 million revolutions)[4]	82000 N 18400 lbf
C1 - Dynamic Radial Rating (1 million revolutions)[5]	316000 N 71100 lbf
C0 - Static Radial Rating	590000 N 133000 lbf
C_{a90} - Dynamic Thrust Rating (90 million revolutions)[6]	53800 N 12100 lbf

Factors

K - Factor[7]	1.52
e - ISO Factor[8]	0.38
Y - ISO Factor[9]	1.57
G1 - Heat Generation Factor (Roller-Raceway)	480
G2 - Heat Generation Factor (Rib-Roller End)	89.8
Cg - Geometry Factor	0.135

[1] These maximum fillet radii will be cleared by the bearing corners.

[2] These maximum fillet radii will be cleared by the bearing corners.

[3] Negative value indicates effective center inside cone backface.

[4] Based on 90 x 10^6 revolutions L_{10} life, for The Timken Company life calculation method. C_{90} and C_{a90} are radial and thrust values.

[5] Based on 1 x 10^6 revolutions L_{10} life, for the ISO life calculation method.

[6] Based on 90 x 10^6 revolutions L_{10} life, for The Timken Company life calculation method. C_{90} and C_{a90} are radial and thrust values for a single-row, $C_{90(2)}$ is the two-row radial value.

[7] These factors apply for both inch and metric calculations. Consult your Timken representative for instruction on use.

[8] These factors apply for both inch and metric calculations. Consult your Timken representative for instruction

on use.

[9] These factors apply for both inch and metric calculations. Consult your Timken representative for instruction on use.

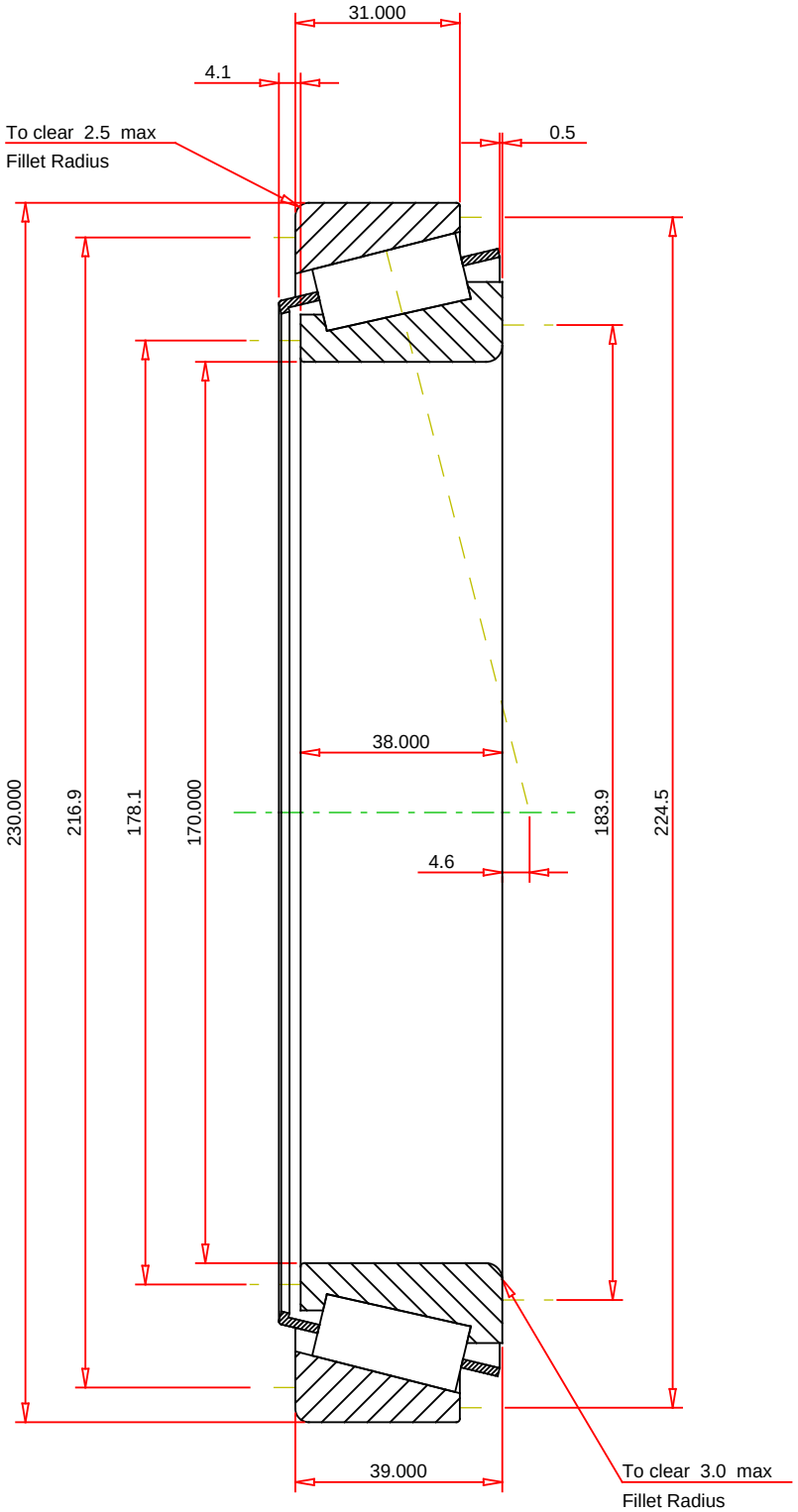

METRIC UNITS

ISO Factor - e	0.38	
ISO Factor - Y	1.57	
Bearing Weight	4.3	kg
Number of Rollers Per Row	32	
Effective Center Location	4.6	mm

TIMKEN®

THE TIMKEN COMPANY
NORTH CANTON, OHIO USA

JHM534149 - JHM534110
TS BEARING ASSEMBLY

K Factor	1.52	
Dynamic Radial Rating - C90	82000	N
Dynamic Thrust Rating - Ca90	53800	N
Static Radial Rating - C0	590000	N
Dynamic Radial Rating - C1	316000	N

Every reasonable effort has been made to ensure the accuracy of the information contained in this writing, but no liability is accepted for errors, omissions or for any other reason.

FOR DISCUSSION ONLY