**The Timken Company**
4500 Mt Pleasant St. NW
N. Canton, OH 44720
**Phone:** (234) 262-3000
**E-Mail:** CustomerCAD@timken.com • **Web site:** www.timken.com

# Timken Part Number HMVC - 38, Inch HMVC Hydraulic Nut

HMVC - 10 through HMVC - 64 have American National Threads Class 3.
HMVC - 68 through HMVC - 190 have Acme General Purpose Threads Class 3G.

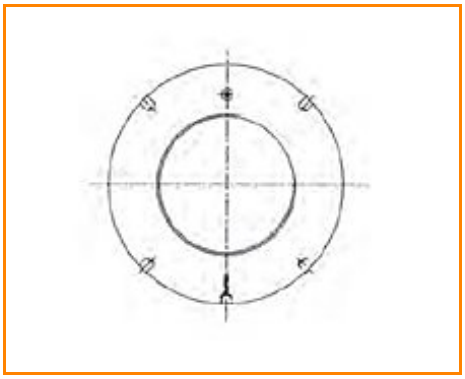

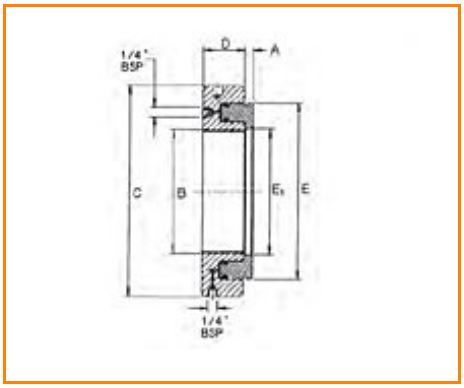


## Specifications

| | |
|---|---|
| **Major Diameter B** | 7.472 in |
| **Threads No. per Inch** | 8 |
| **C** | 10.630 in |
| **D** | 1.6530 in |
| **E** | 9.409 in |
| **$E_1$** | 7.520 in |
| **A** | 0.3150 in |
| **Piston Length of Travel** | 0.276 in |
| **Piston Area** | 17.8 in² |
| **Assembly Weight** | 23.1 lb |