The Timken Company
4500 Mt Pleasant St. NW
N. Canton, OH 44720
Phone: (234) 262-3000
E-Mail: CustomerCAD@timken.com • **Web site:** www.timken.com

Timken Part Number HM266446 - HM266410, Tapered Roller Bearings - TS (Tapered Single) Imperial

This is the most basic and most widely used type of tapered roller bearing. It consists of two main separable parts: the cone (inner ring) assembly and the cup (outer ring). It is typically mounted in opposing pairs on a shaft.



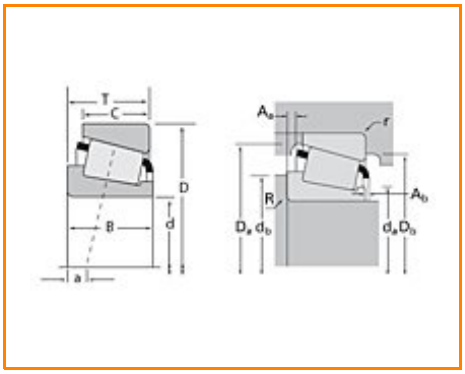

Specifications | Dimensions | Abutment and Fillet Dimensions | Basic Load Ratings | Factors

Specifications

Series	HM266400
Cone Part Number	HM266446
Cup Part Number	HM266410
Design Units	Imperial
Bearing Weight	76.10 Kg 167.80 lb
Cage Type	Stamped Steel

Dimensions

d - Bore	381.000 mm 15.0000 in
D - Cup Outer Diameter	546.100 mm 21.5000 in
B - Cone Width	104.775 mm 4.1250 in
C - Cup Width	82.550 mm 3.2500 in
T - Bearing Width	104.775 mm 4.1250 in

Abutment and Fillet Dimensions

R - Cone Backface "To Clear" Radius[1]	6.35 mm 0.25 in
r - Cup Backface "To Clear" Radius[2]	6.35 mm 0.250 in
da - Cone Frontface Backing Diameter	404.88 mm 17.36 in
db - Cone Backface Backing Diameter	415.04 mm 16.34 in
Da - Cup Frontface Backing Diameter	521.97 mm 20.55 in
Db - Cup Backface Backing Diameter	506.98 mm 19.96 in
Ab - Cage-Cone Frontface Clearance	7.1 mm 0.28 in
Aa - Cage-Cone Backface Clearance	9.1 mm 0.36 in
a - Effective Center Location[3]	-7.10 mm -0.28 in

Basic Load Ratings

C90 - Dynamic Radial Rating (90 million revolutions)[4]	588000 N 132000 lbf
C1 - Dynamic Radial Rating (1 million revolutions)[5]	2270000 N 510000 lbf
C0 - Static Radial Rating	4210000 N 946000 lbf
C_{a90} - Dynamic Thrust Rating (90 million revolutions)[6]	335000 N 75200 lbf

Factors

K - Factor[7]	1.76
e - ISO Factor[8]	0.33
Y - ISO Factor[9]	1.8
G1 - Heat Generation Factor (Roller-Raceway)	4380
G2 - Heat Generation Factor (Rib-Roller End)	279
Cg - Geometry Factor	0.212

[1] These maximum fillet radii will be cleared by the bearing corners.

[2] These maximum fillet radii will be cleared by the bearing corners.

[3] Negative value indicates effective center inside cone backface.

[4] Based on 90 x 10^6 revolutions L_{10} life, for The Timken Company life calculation method. C_{90} and C_{a90} are radial and thrust values.

[5] Based on 1 x 10^6 revolutions L_{10} life, for the ISO life calculation method.

[6] Based on 90 x 10^6 revolutions L_{10} life, for The Timken Company life calculation method. C_{90} and C_{a90} are radial and thrust values for a single-row, $C_{90(2)}$ is the two-row radial value.

[7] These factors apply for both inch and metric calculations. Consult your Timken representative for instruction on use.

[8] These factors apply for both inch and metric calculations. Consult your Timken representative for instruction

on use.

[9] These factors apply for both inch and metric calculations. Consult your Timken representative for instruction on use.

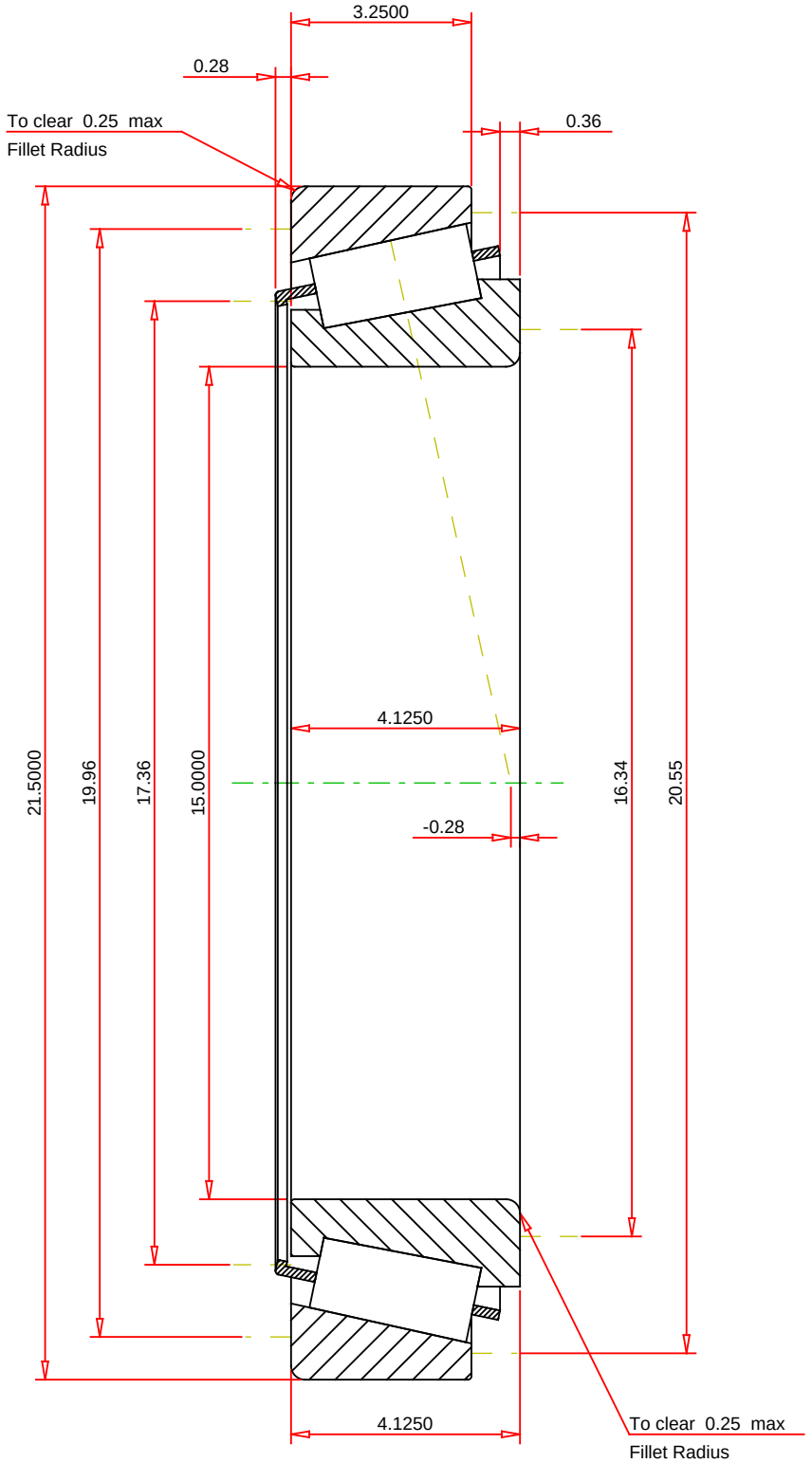

IMPERIAL UNITS

ISO Factor - e	0.33	
ISO Factor - Y	1.8	
Bearing Weight	167.8	lb
Number of Rollers Per Row	32	
Effective Center Location	-0.28	inch

TIMKEN®

THE TIMKEN COMPANY
NORTH CANTON, OHIO USA

HM266446 - HM266410
TS BEARING ASSEMBLY

K Factor	1.76	
Dynamic Radial Rating - C90	588000	lbf
Dynamic Thrust Rating - Ca90	335000	lbf
Static Radial Rating - C0	4210000	lbf
Dynamic Radial Rating - C1	2270000	lbf

Every reasonable effort has been made to ensure the accuracy of the information contained in this writing, but no liability is accepted for errors, omissions or for any other reason.

FOR DISCUSSION ONLY