DODGE®
AN RBC® COMPANY

Mounted Bearings

ROLLER AND PLAIN



Table of Contents

RGB-1	Reference guide
B20-1	Type E family (tapered)
B21-1	Specialty (tapered)
B22-1	Safety Mount® family (spherical)
B23-1	S-2000 (spherical)
B24-1	Unified SAF (spherical)
B25-1	Specialty (spherical)
B26-1	Sleevoil (hydrodynamic)
B27-1	Solidlube® (plain)
B28-1	Specialty (plain)
B29-1	Accessories

Reference guide

Bearings



Type E tapered roller bearings

Page B20-1

- Pre-assembled, pre-lubricated, and factory-adjusted to be shaft-ready out of the box
- XTS triple-lip seal
- E-Tect seal option for extra protection
- Comparable mounting dimensions with ball bearings
- Allows for easy and cost-effective upgrade from ball bearings
- Sensor-ready for condition monitoring



TAF tapered roller bearings

Page B20-1

- Pre-assembled, pre-lubricated, and factory-adjusted to be shaft-ready out of the box
- XTS triple-lip seal
- E-Tect seal option available up to 5”
- Cost-saving alternative to SAF-style spherical bearings
- Shaft-ready—mounts six times faster than SAF
- Interchangeable with SAF-style pillow blocks
- Capable of +/- five degrees static misalignment
- Self-aligning
- Sensor-ready for condition monitoring



Type EXL tapered roller bearings

Page B20-1

- Pre-assembled, pre-lubricated, and factory-adjusted to be shaft-ready out of the box
- XTS triple-lip seal
- Completely sealed inner unit
- High-strength, ductile-iron housing
- Available in expansion and non-expansion
- Capable of +/- four degrees static misalignment
- Self-aligning
- Sensor-ready for condition monitoring



Double Interlock® tapered roller bearings

Page B20-1

- Pre-assembled, pre-lubricated, and factory-adjusted to be shaft-ready out of the box
- XTS triple-lip seal
- E-Tect seal option for extra protection
- Special clearances and greases available
- Sealed inner unit
- Capable of +/- five degrees static misalignment
- Self-aligning
- Sensor-ready for condition monitoring

Reference guide

Bearings (continued)



Type K tapered roller bearings
Page B20-1

- Pre-assembled, pre-lubricated, and factory-adjusted to be shaft-ready out of the box
- XTS triple-lip seal
- E-Tect seal option for extra protection
- Reduced length-through-bore
- Single-collar design saves space and installation time
- Allows bearing to be closer to the load for optimization of design
- Same housing as Double Interlock
- Capable of +/- five degrees static misalignment
- Self-aligning
- Sensor-ready for condition monitoring

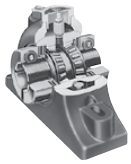

Type C specialty tapered bearings
Page B21-1

- Two single-row tapered bearings press-fitted on sleeve
- Improved concentricity over other collar-mounted types of bearings
- Steel labyrinth seals
- Rugged two-piece outer housing
- Positive concentric clamp sleeve mounting
- Heavy-duty gray iron
- Sensor-ready for condition monitoring



Special Duty tapered roller bearings
Page B21-1

- Matched double-row tapered roller bearing
- Tapered adapter sleeve mounting
- Effective piston ring seals
- Rugged two-piece housing
- Heavy-duty gray iron
- Sensor-ready for condition monitoring



Safety Mount IP spherical roller bearings
Page B22-1

- Patented push-pull adapter mounting system for the easiest installation and removal compared to SAF-style bearings
- Solid, cast-iron housing
- Available in 2- and 4-bolt pillow blocks, flanges, and take-ups
- Installation and removal in less than 15 minutes
- Fully concentric shaft attachment
- Mitigates fretting corrosion
- Capable of +/- one static or dynamic misalignment
- Pre-assembled and pre-lubricated to be shaft-ready out of the box
- Standard Trident™ triple-lip seal for maximum protection in wet or dirty environments
- Labyrinth non-contact seal option available for high-speed and high-temperature applications
- E-dimensioned and steel housings available
- Field-convertible between expansion and non-expansion
- Sensor-ready for condition monitoring

Reference guide

Bearings (continued)



Safety Mount ISAF spherical roller bearings

Page B22-1

- Patented push-pull adapter mounting system for the easiest installation and removal compared to SAF-style bearings
- Dimensionally-interchangeable with SAF-style bearings
- Split, cast-iron housing
- Installation and removal in less than 15 minutes
- Fully concentric shaft attachment
- Mitigates fretting corrosion
- Capable of +/- one static or dynamic misalignment
- Pre-assembled and pre-lubricated to be shaft-ready out of the box
- Standard Trident triple-lip seal for maximum protection in wet or dirty environments
- Labyrinth non-contact seal option available for high-speed and high-temperature applications
- Field-convertible between expansion and non-expansion
- Sensor-ready for condition monitoring



Safety Mount ISN spherical roller bearings

Page B22-1

- Patented push-pull adapter mounting system for the easiest installation and removal compared to SAF-style bearings
- Metric-dimensioned for easy interchangeability
- Solid, cast-iron housing
- Available in 2- and 4-bolt plummer blocks
- Installation and removal in less than 15 minutes
- Fully concentric shaft attachment
- Mitigates fretting corrosion
- Capable of +/- one static or dynamic misalignment
- Pre-assembled and pre-lubricated to be shaft-ready out of the box
- Standard Trident triple-lip seal for maximum protection in wet or dirty environments
- Labyrinth non-contact seal option available for high-speed and high-temperature applications
- Field-convertible between expansion and non-expansion
- Sensor-ready for condition monitoring

Reference guide
Bearings (continued)



S-2000 spherical roller bearings
Page B23-1

- High-capacity, double-row spherical rollers
- Capable of +/- one degree static or dynamic misalignment
- Pre-assembled, pre-adjusted, and pre-lubricated to be shaft-ready out of the box
- Features Springlok collar that acts as a flinger
- Standard Trident triple-lip seal for maximum protection in wet or dirty environments
- Labyrinth non-contact seal option available for high-speed and high-temperature applications
- 65-degree set screw attachment provides maximum holding power compared to 90- or 120-degree angles
- Steel and E-dimensioned housings available
- Sensor-ready for condition monitoring



USAF spherical roller bearings
Page B24-1

- 22200, 22300, 23000, 23100, and 23200 series
- Industry-standard dimensions interchangeable with SAF housings
- Five sealing options to match most operating conditions
- Cast-in dimples locate drill holes for lube fitting, vents, sensors, and mounting modifications
- Standard housings have two oversized drains adaptable for circulating oil systems
- Pry slots allow easy separation of the pillow block
- Sensor-ready for condition monitoring



Split-Sphere spherical roller bearings
Page B24-1

- Fully-split spherical roller bearing drop-in replacement for USAF 500 series non-split bearing
- Easy to replace without removing other shaft-mounted components
- Only split-race bearing made to standard SAF pillow block dimensions
- Has same OD dimensions as a standard spherical bearing
- Uses 22200 series split roller bearings
- Sensor-ready for condition monitoring



Unisphere® II spherical roller bearings
Page B25-1

- Dimensionally interchangeable with ball bearings in length-through-bore, base-to-center height, and footprint
- Approximately five times the load rating of ball bearings
- Features same rolling elements and installation-ready components as S-2000
- Maintains sealing effectiveness with proven “R” seal
- Tapered seal landing maintains seal contact during maximum misalignment
- Springlok collar mount with 65° set screw spacing for optimum clamping force
- Sensor-ready for condition monitoring

Reference guide

Bearings (continued)



Sleevoil R hydrodynamic pillow block bearings

Page B26-1

- No metal-to-metal contact during operation for extended life
- Handles high speeds
- Dampens vibration, providing quiet operation
- Fully split for ease of maintenance
- Self-aligning
- Thrust capability
- External cooling (air, water, or oil) available for hot shafts
- Sensor-ready for condition monitoring



Sleevoil RTL hydrodynamic pillow block bearings

Page B26-1

- Spherical design does not require plunger screw re-tightening
- Fully-split construction
- Engineered for water-cooling in high-temperature applications
- Rugged, gray-iron housing
- Babbitted liner
- Self-alignment capability
- Trapezoidal oil ring lubrication with self-contained oil supply
- No metal-to-metal contact during operation
- Sensor-ready for condition monitoring



Sleevoil oil level and filtration system (OLF2)

Page B26-1

- Maintains proper oil level while bearing is running
- Increases bearing performance and life
- Allows even oil distribution and cooler operating temperatures
- Ensures filtered clean oil
- Permits easy filter change while bearing is operating
- Sensor-ready for condition monitoring



Solidlube sleeve bearings

Page B27-1

- Functions in harsh environments where ball bearing will not
- Self-lubricating, statically self-aligning
- Covers a wide range of temperature extremes
- 700 series: -40 °F to 700 °F
- 800 series: -40 °F to 800 °F
- 1000 series: -200 °F to -40 °F and 250 °F to 1000 °F
- Housing types: 2-bolt pillow blocks, 4-bolt and 2-bolt flange units, and take-up units
- Ideal where bearings are subject to dry cycles or where lube systems would be too costly
- Recommended for slow speeds and limited shaft movement applications
- Bore sizes 3/4” to 5”
- Sensor-ready for condition monitoring

Reference guide
Bearings (continued)



Bronzoil sleeve bearings
Page B28-1

- Self-oiling bushing feeds oil to shaft
- Split-pressed steel housing
- Statically self-aligning
- Bushing shoulder provides self-lubricating bearing thrust surface
- Slotted bolt holes
- Sensor-ready for condition monitoring



Bronze-Bushed sleeve bearings
Page B28-1

- Good for slow speeds and shock loads
- Capable of MPTA load ratings
- Cast-iron housings in 2- and 4-bolt pillow blocks
- Babbitted bearing features solid or fully-split housing
- Bronze-Bushed bearing features fully split housing
- Bronze bushing is split and easily replaced
- Sensor-ready for condition monitoring



Take-up frames
Page B29-1

- 7 take-up frames types available from stock
- Standard take-up frames travel from 1-1/2" to 60"
- Take-up frames allow for the mounting of Dodge roller and sleeve bearings
- Take-up frame capacity is pre-engineered to exceed bearings capacity
- Made to provide/maintain tension and shaft centers on a variety of belts and chain-type conveyors



IIoT technologies
Page B29-1

- Wireless sensors for remote condition monitoring
- Automatic lubricator for simple, hands-free maintenance
- Easy installation and setup
- Free, easy-to-use platform for remote condition monitoring of connected assets

For instruction manuals and additional information, refer to **dodge.ptplace.com.**

Type E family (tapered)

B20-1	**Type E family (tapered)**
B20-2	**Features and benefits**
B20-8	**Specification**
B20-9	**How to order**
B20-10	**Nomenclature**
B20-11	**Selection**
B20-22	**Dimensions**
B20-22	Type E
B20-34	Type EXL
B20-40	TAF
B20-46	Double Interlock
B20-54	Type K
B20-64	**Metric**
B20-64	Selection
B20-70	Type E
B20-72	Double Interlock
B20-74	**Accessories**

Features and benefits

Type E family

Overview

Introduced in 1943, the original Type E bearing immediately made an impact—giving customers an economical solution capable of handling heavy loads in harsh applications. Since its launch over 80 years ago, our Type E has grown to a family of solutions that have set the industry benchmark for mounted tapered roller bearings in quality, reliability, and longer driven equipment life.

Family features

- Factory-assembled to be shaft-ready out of the box
- Case hardened rollers and races
- Factory-filled with Dodge engineering-approved NGLI grade 2 lithium-complex grease
- 65-degree set screw angle maximizes holding power compared to competitive 90- and 120-degree angles
- Mechanically-retained XTS triple-lip seal
- Oversized Springlok collars act as flingers for added protection
- Pre-drilled and tapped to be sensor-ready

XTS sealing system

Engineering studies have found that 80 percent of all mounted bearing failures are due to contamination or lubrication issues. Dodge sealing systems are designed to prevent contamination, retain lubricant, and prevent seal blowout for increased bearing life. Type E family bearings come standard with the XTS triple-lip sealing system for optimized performance.

- Mechanically-retained to optimize grease retention while preventing seal blowout
- Collar-riding seal lip provides the first level of defense against contaminants
- Trash guard protects inner seals
- Primary contact seal protects internal components and helps retain grease
- Optional E-Tect seal kit for harsh-duty environments

Note: Instruction manuals can be found at dodge.ptplace.com.

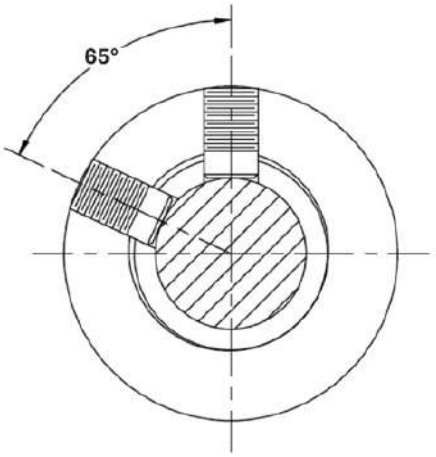

Set screw angle maximizes holding power

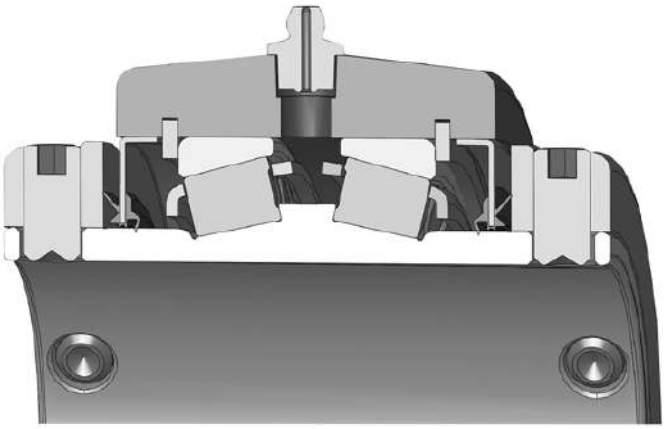

XTS sealing

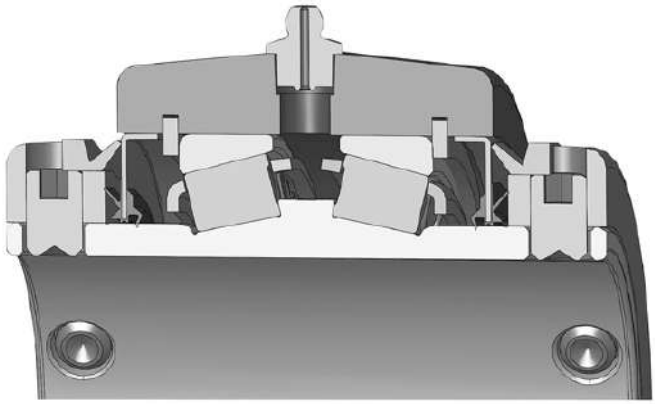

XTS sealing with E-Tect option

Type E family

Type E

Launched over 80 years ago, the Dodge Type E bearing was the first of its kind on the market—providing customers with an innovative mounted tapered roller bearing solution—and continues to set the standard for reliable performance in high thrust-load applications. With comparable mounting dimensions, Type E is the easy upgrade from ball bearings with the ability to handle heavy loads in harsh applications.



- Widest variety of housing styles within the Type E family
- Solid, cast-iron housing for maximum durability in harsh environments
- Stocked in all configurations
- Specialized, heat-treated cones provide the right balance of hardness and material strength to maximize performance and reliability
- Steel end covers available up to 3 inches (75 mm)

Product offering

- Pillow block, 1-3/16—3-1/2 in (35—180 mm)
- Piloted flange, 1-3/16—5 in (35—125 mm)
- Flange, 3/16—4-1/2 in (35—115 mm)
- Top angle take-up frame, 1-3/4—4 in (45—100 mm)
- Center-pull frame with wide-slot take-up frame, 1-3/8—3 in (35—75 mm)

Type E family

Type EXL

As the premier extension of the original Type E mounted bearing invented by Dodge over 80 years ago, Type EXL provides optimized performance with enhanced features designed to mitigate unforeseen downtime and reduce maintenance costs.

- Dimensionally-interchangeable with all standard Type E products
- Split-cap design with a completely sealed inner unit allows for easy cartridge replacement and can handle +/- four degrees static misalignment
- S1 inner unit fits both expansion and non-expansion housing styles
- High-strength, ductile-iron housing maximizes tensile strength
- Nameplate protects grease zerk for easier maintenance in dirty environments

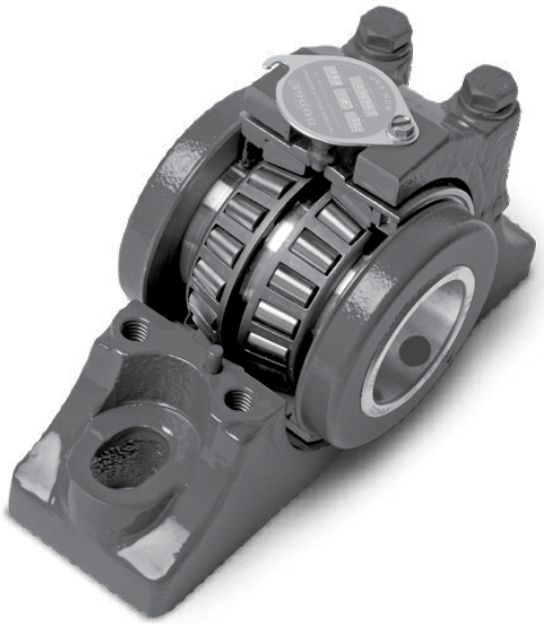

Product offering



4-bolt pillow blocks
2-1/4—5 in



2-bolt pillow blocks
1-3/16—3-1/2 in



4-bolt flanges
1-3/16—4 in

Type E family
TAF

The cost-saving alternative to SAF spherical bearings

TAF is engineered to be the simpler, faster solution for your toughest applications, being dimensionally interchangeable with SAF pillow block mounted bearings to provide extra strength and the ability to withstand high-thrust load applications.

- Cast-iron, split-housed design allows cartridge replacement in the field and provides maximum durability
- Drop-in replacement for SAF pillow block bearings for a six times faster installation with no specialized tools
- Nameplate protects grease zerk for easier maintenance in wet and dirty environments
- Factory-sealed, unitized S1 inner unit uses 75 percent less grease than SAF-style bearings and eliminates opportunity for contamination upon installation
- Capable of +/- five degrees static misalignment
- Available in expansion and non-expansion housing styles
- Self-aligning

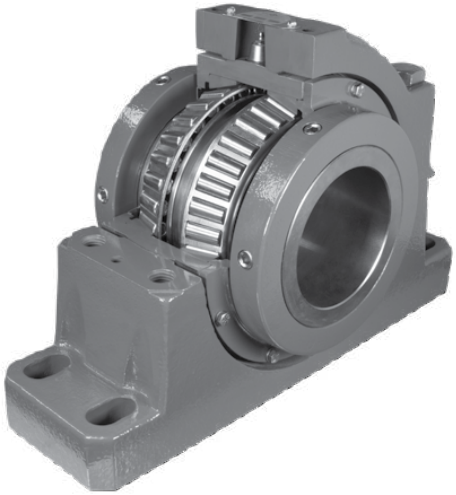

Type E family
TAF

TAF versus standard SAF bearing comparison

Dodge TAF

Assembly



- Single-piece inner unit
- Sealed bearing
- Factory assembled and adjusted
- Shaft-ready out of the box
- Pre-lubricated

Sealing



- Standard XTS triple-lip seal with optional E-Tect seal for additional protection from contamination
- Inner unit carries seal
- Up to 5° static misalignment
- Seal and bearing ride together in inner unit
- Seals maintain contact even with misalignment

Standard SAF

Assembly



- Multiple pieces/packages
- Open bearing
- Feeler gauge and radial clearance reduction required
- Grease required

Sealing



- Seals ride independently of bearing
- Less than 1° static misalignment
- Sealing effectiveness decreases as misalignment increases
- Seals distort when misalignment occurs

TAF is interchangeable with SAF mounting dimensions

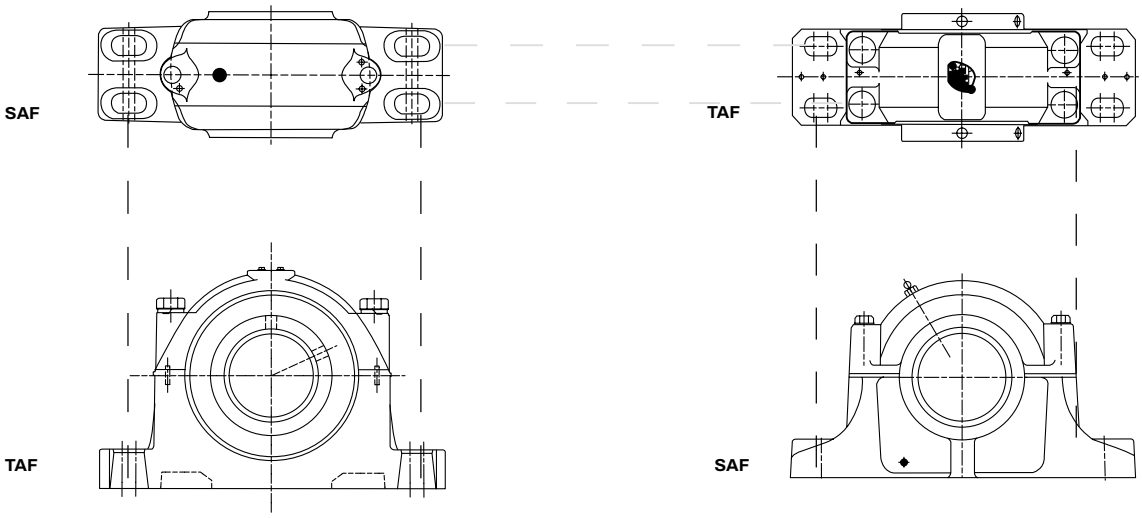

Type E family

Double Interlock and Type K

Key to the Dodge legacy of mounted bearing solutions, Double Interlock and Type K feature a cast-iron, split-housed design for easy cartridge replacement in the field. The completely sealed S1 inner unit eliminates opportunity for contamination upon installation and allows for +/- five degrees static misalignment—providing the application versatility and enhanced performance you can rely on.

Double Interlock product offering

- 2-bolt pillow block, 1-3/16—3-1/2 in
- 4-bolt pillow block, 2-1/4—7 in
- 4-bolt square flange, 1-3/16—4 in
- 4-bolt round flange, 4-7/16—5 in
- S1 inner unit, 1-3/16—7 in
- B1 inner unit, 1-3/16—5 in
- D inner unit, 1-3/16—5 in

Type K product offering

- 2-bolt pillow block, 1-3/16—3-1/2 in
- 4-bolt pillow block, 2-15/16—3-15/16 in
- 4-bolt square flange, 1-3/16—3-15/16 in
- Wide-slot take-up, 1-3/8—3 in
- Top-angle take-up, 1-3/4—3-15/16 in
- S1 inner unit, 1-3/16—3-15/16 in
- B1 inner unit, 1-3/6—3-15/16 in

Double Interlock

Dual locking collar for increased holding power and thrust capacity

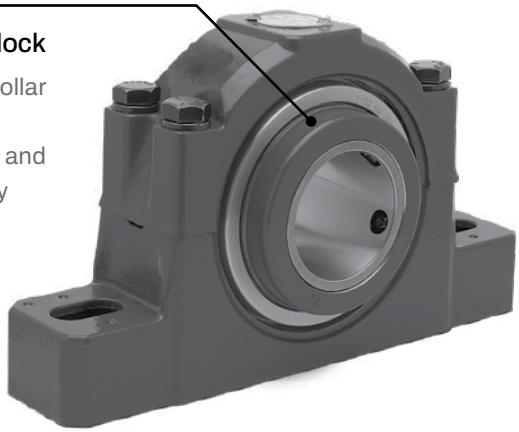

Type K

Single locking collar and reduced length-through-bore for application versatility in limited-space applications



Specification

Type E family

Type E, Type EXL, TAF, Double Interlock, Type K

Type E family mounted bearings are high-capacity tapered roller bearings capable of handling any combination of radial and thrust load within the capacity of the bearing.

The bearings are mounted to the shaft by means of set screw collars with a 65-degree set screw angle for optimum clamping force. Type E, Type EXL, TAF, and Double Interlock feature a locking collar at each end of their extended inner races. Type K features a single locking collar for reduced length-through-bore. Factory-assembled, adjusted, and pre-lubricated, the bearings are shaft-ready out of the box for a streamlined installation.

The standard housing material is a high-performance cast iron. The outer housing for the Type K and Double Interlock flange bearings through 4" bore size and all Type EXL housings utilize ductile-iron housings.

Type E bearings and Type K take-up units feature solid housings. Type EXL, TAF, Double Interlock, and Type K pillow block and flange units feature split-housed designs and factory-sealed, unitized inner units for easy maintenance and replacement.



How to order

Type E family

Type E, Type EXL, TAF, Double Interlock, Type K

There are two ways to specify Dodge bearings—by six-digit part number or by description. Most of the products offered have part numbers with listings shown throughout this catalog. Use of part numbers ensures accurate order processing.

When part numbers are not shown, the product may be specified by description. This method is used when ordering units that include modifications or options. To order by description, use the nomenclature key shown for each product, adding any special instructions to the end of the description for options not covered by the nomenclature.

Special bearing requirements

Depending on the bearing, a wide variety of lubricants, seals, locking devices, finishes, and adjustments are available for a wide range of applications from general purpose to extreme ambient temperatures, high speeds, or high loads.

Special lubricant options usually involve set-up charges, minimum quantities, and price premiums. To order, specify the type of lubricant required at the end of the product name or after the standard part number.

Example:

F4B-XX-207 except with Mobil HTS #2 grease

or

P/N-XXXXXX except with Mobil HTS #2 grease

Other special requirements not listed

For applications requiring modifications not listed, contact Application Engineering for bearings at +1 864 284 5700.

Nomenclature

Type E family

Type E, Type EXL, TAF, Double Interlock, Type K

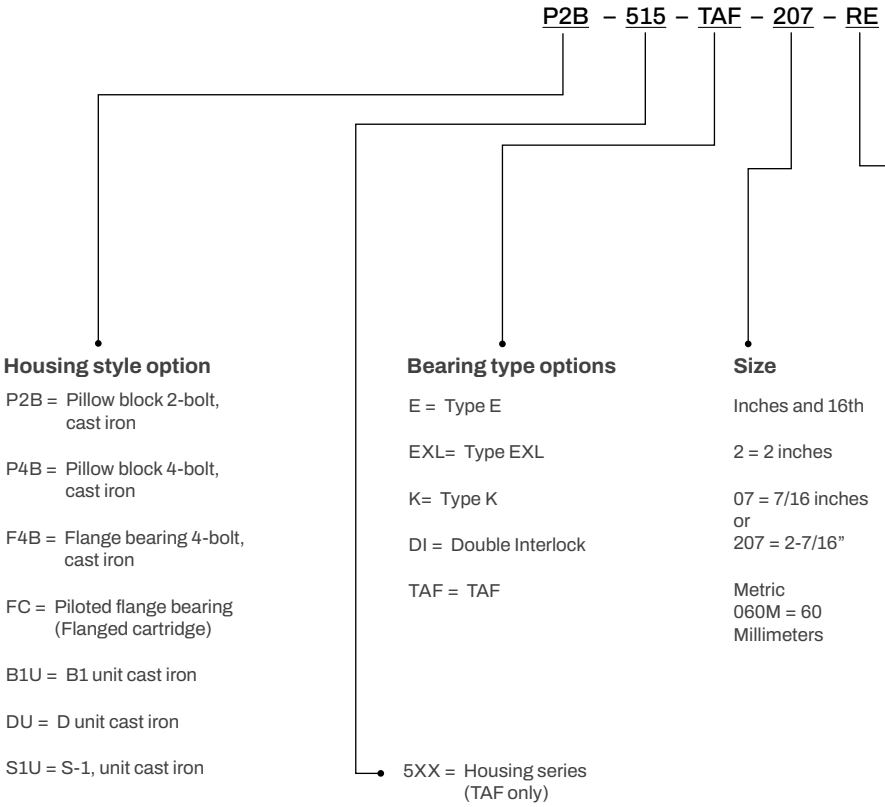

Selection

Type E family

Type E, Type EXL, TAF, Double Interlock, Type K

Type E family double-row tapered roller bearings have the capacity to carry heavy radial loads and combined radial and thrust loads. The maximum recommended load which can be applied is limited by various components in the system such as bearing, housing, shaft, shaft attachment, speed, and life requirements as listed in this catalog. Dodge tapered roller bearings have been applied successfully even when these limits have been exceeded under controlled operating conditions. Contact Application Engineering at +1 864 284 5700 for applications which exceed the recommendations in this catalog.

L_{10} hours life – The life which may be expected from at least 90 percent of a given group of bearings operating under identical conditions.

$$L_{10} = \left(\frac{C_{90}}{P}\right)^{10/3} \times \frac{1{,}500{,}000}{rpm}$$

Where:

C_{90} = Dynamic capacity, lbs (Table 2)

P = Equivalent radial load, lbs

General

Heavy service – For heavy shock loads, frequent shock loads, or severe vibrations, add up to 50 percent (according to severity of conditions) to the equivalent radial load. Consult Application Engineering for additional selection assistance.

Thrust load values shown in the table below are recommended as a guide for general applications that will give adequate L_{10} life for pillow blocks. The maximum thrust load should not exceed values shown on Table 4. Where substantial radial load is also present, it is advisable to calculate actual L_{10} life to assure that it meets the requirements. The effectiveness of the shaft attachment to carry thrust load depends on proper tightening of the set screws, shaft tolerance and shaft deflections. Therefore, it is advisable to use auxiliary thrust carrying devices such as shaft shoulder, snap ring or a thrust collar to locate the bearing under thrust loads heavier than shown below, or where extreme reliability is desired.

Rpm range		20—200	201—2000	Over 2000
Recommended thrust load	E, DI, TAF, EXL	$C_{90}/4$	$C_{90}/8$	$C_{90}/12$
	K	$C_{90}/5$	$C_{90}/8$	$C_{90}/12$

The shaft tolerances recommended below are adequate for normal radial and radial/thrust load applications. The radial load is limited by the attachment to the shaft (see Table 2). Where the applied radial load (F_R) exceeds this limit (maximum allowable slip fit radial load), a snug-to-light press fit of the shaft is required. Since the allowable load, especially at a low speed, is very large, the shaft should be checked to assure adequate shaft strength.

The magnitude and direction of both the thrust and radial load must be taken into account when selecting a housing. When pillow blocks are utilized, heavy loads should be directed through the base. Where uplift loads are involved, see Tables 7-9 for maximum values. Where a load pulls the housing away from the mounting base, both the hold-down bolts and housing must be of adequate strength. Auxiliary load carrying devices such as shear bars are advisable for side or end loading of pillow blocks and radial load for flange units.

Shaft tolerances

Shaft size (in)	Tolerance (in)
Up to 1-1/2	+0.0000 to -0.0005
1-5/8 to 4	+0.000 to -0.001
4-7/16 to 6	+0.000 to -0.0015
6-7/16 to 8	+0.000 to -0.002

Type E family

Type E, Type EXL, TAF, Double Interlock, Type K

Selecting bearings supporting radial loads only

1. Define L_{10} life hours desired
2. Establish bearing radial load, F_R (F_R = P for pure radial load conditions)
3. Establish rpm

Using the easy selection Table 3, fine under the rpm column, the equivalent radial load that equals or is higher than the application radial load for the desired life. The shaft size on the far left will be the minimum shaft size that you can use for your application. If the desired life is different than the values shown on the chart, use alternate Method A shown below.

Example:

L_{10} life = 30,000 hours
Radial load = 4,200 lbs
Rpm = 1,200

At the intersection of the 1,200 rpm column and the 30,000 hours L_{10} life row, the equivalent radial load of 4,240 pounds. exceeds the 4,200 pounds radial load for shaft size 2-3/16 inches. A bearing with a bore of 2-3/16 inches may be used for this application.

Alternate method A – Selecting a bearing for an L_{10} life value not shown in the easy selection chart.

The L_{10} life equation can be rearranged so that the bearing dynamic capacity C_{90} is identified in terms of L_{10}, rpm and P.

$$C_{90} = \left(\frac{L_{10} \times rpm}{1{,}500{,}000} \right)^{0.3} X \quad P$$

($P = F_R$ for pure radial load conditions)

Since the L_{10}, rpm, and P are known, solve for C_{90}. Select from the dynamic capacity column on Table 2. The C_{90} value needs to be equal to or greater than the C_{90} value just calculated. The bore size on the far left represents the bore size selection. Check that the application rpm does not exceed the maximum rpm on Table 2. Also check that the radial load does not exceed the maximum allowable slip fit radial load shown on Table 2. If it does, a line to line to light press fit of shaft is required.

When selecting an L_{10} life of less than 30,000 hours, particular attention must be paid to shaft deflection and proper lubricant selection.

Selecting bearings supporting combination radial and thrust loads

When a bearing supports both a radial load and a thrust load, the loading on the two rows is shared unequally depending on the ratio of thrust to radial load. The use of the X (radial factor) and Y (thrust factor) from Table 2 converts the applied thrust load and radial loads to an equivalent radial load having the same effect on the life of the bearing as a radial load of this magnitude.

The equivalent radial load

$$P = XF_R + YF_A$$

Where:

- P = Equivalent radial load, lbs
- F_R = Radial load, lbs (see Table 2 for allowable slip fit maximum)
- F_A = Thrust (axial) load, lbs
- e = Thrust load to radial load factor (Table 2)
- X = Radial load factor (Table 2)
- Y = Thrust load factor (Table 2)

To find X and Y, calculate F_A/F_R and compare to e for the selected bore size. Determine X and Y from Table 2, depending on whether F_A/F_R is equal to or less than e, or F_A/F_R is greater than e. Substitute all known values into the equivalent radial load equation. P (equivalent radial load) can be used in the life formula to determine L_{10}, or it can be compared to the allowable equivalent radial load ratings for the speed and hours life desired in the easy selection Table 3.

Type E family

Type E, Type EXL, TAF, Double Interlock, Type K

Selecting bearings supporting only thrust loads

Tapered roller bearings perform extremely well under pure thrust load applications. Use $P = YF_A$ for the equivalent radial load. The value of Y is obtained from Table 2 for $F_A/F_R > e$. Substitute Y and F_A into the equivalent load equation. P (equivalent radial load) can be used in the life formula to determine L_{10} or it can be compared to the allowable equivalent radial load ratings for the speed and hours life desired in the easy selection Table 3.

Lubrication

Type E family tapered roller bearings are lubricated at the factory with Mobil XHP222 grease. This grease will adequately handle low and medium speeds with low and medium loads at normal temperatures as defined on Table 6. For very low and high speeds, for heavy loads, and for low and high temperatures, special greases must be used. Please refer to the bearing lubrication calculator at ptwizard.com or contact Application Engineering at +1 864 284 5700. Dodge engineers will recommend bearings and lubricants for the above unusual conditions. Dodge also has the expertise to custom design and build special bearings for your needs. The only maintenance requirement for Dodge tapered roller bearings is periodic relubrication at regular intervals as outlined in the appropriate instruction manuals.

Relubrication schedule

Hours run per day	Suggested lubrication period in weeks							
	1 to 250 rpm	251 to 500 rpm	501 to 750 rpm	751 to 1000 rpm	1001 to 1500 rpm	1501 to 2000 rpm	2001 to 2500 rpm	2501 to 3000 rpm
8	12	12	10	7	5	4	3	2
16	12	7	5	4	2	2	2	1
24	10	5	3	2	1	1	1	1

High speed operation

In the higher speed ranges, too much grease will cause overheating. The amount of grease that the bearing will take for particular high speed application can only be determined by experience—contact Application Engineering at +1 864 284 5700. If excess grease in the bearing caused overheating, it will be necessary to remove grease fitting (also drain plug when furnished) to permit excess grease to escape. When establishing a relubrication schedule, note that a small amount of grease at frequent intervals is preferable to a large amount at infrequent intervals.

Operation in presence of dust, water, or corrosive vapors

Under these conditions the bearing should contain as much grease as speed will permit, since a full bearing with consequent slight leakage is the best protection against entrance of foreign material. In the higher speed ranges too much grease will cause overheating—see “High Speed Operation”. In the lower speed ranges, it is advisable to add extra grease to a new bearing before putting into operation. Bearings should be greased as often as necessary (daily if required) to maintain a slight leakage at the seals.

Installation and maintenance

In nearly all application, good design practice requires two bearings supporting the shaft. In cases where three or more bearings are installed, unless precautions are taken to line the bearings up both vertically and horizontally, it is possible to induce heavy loads. In the case of two bearings, alignment is not as critical, especially with Type EXL, TAF, Double Interlock, and Type K—designed to allow as much as two to seven degrees of static misalignment depending on bore size. To ensure good alignment, mounting surfaces must be checked for flatness and must lie in the same plane. When tightening base bolts and cap bolts, each bolt should be alternately tightened in incremental torque values until full torque is achieved to prevent the angular shifting of the pillow block that occurs when one bolt is tightened to its full torque. Shimming may be required to minimize misalignment.

Table 1: Set screw torque

Shaft size (in)	Set screw size	Tightening torque (in-lbs)
1-3/16—1-11/16	5/16—18	165
1-3/4—2-1/2	3/8—16	290
2-11/16—3-1/2	1/2—13	620
3-15/16—5	5/8—11	1325
5-7/16—6	3/4—10	2150
6-7/16—7	7/8—9	5130

Shaft size (mm)	Set screw size	Tightening torque (Nm)
35—40	M8	17.8
45—65	M10	35
70—75	M12	57
80—90	M12	57
100—125	M16	126

Type E family

Type E, Type EXL, TAF, Double Interlock, Type K

Table 2: Type E family radial and thrust factors

Shaft size (in)	e	F_A/F_R<e		F_A/F_R>e		Dynamic capacity C_{90}*	Static capacity C_0	Maximum rpm	Maximum rpm	Maximum allowable Slip fit radial load, F_R **, lbs	
		X	Y	X	Y	lbs	lbs	XTS seal	E-Tect***	E, DI, EXL, and TAF	K
1-3/16 1-1/4	0.49	0.87	1.77	0.70	2.14	3,890	15,760	4,490	3,100	3,100	2,100
1-3/8 1-7/16	0.46	0.87	1.89	0.70	2.28	6,220	26,000	3,820	2,675	5,000	3,300
1-1/2 1-5/8 1-11/16	0.44	0.87	1.96	0.70	2.37	8,000	33,000	3,320	2,325	6,400	4,300
1-3/4 1-7/8 1-15/16 2	0.33	0.87	2.64	0.70	3.18	10,500	43,000	3,050	2,135	8,400	5,600
2-3/16	0.36	0.87	2.38	0.70	2.87	11,000	48,200	2,730	1,900	8,900	5,900
2-1/4 2-7/16 2-1/2	0.40	0.87	2.17	0.70	2.63	11,800	54,000	2,420	1,700	9,500	6,300
2-11/16 2-3/4 2-15/16 3	0.46	0.87	1.87	0.70	2.26	12,500	61,200	2,060	1,440	10,000	6,700
3-3/16 3-1/4 3-7/16 3-1/2	0.50	0.87	1.71	0.70	2.07	20,000	108,600	1,640	1,145	16,000	10,500
3-15/16 4	0.49	0.87	1.77	0.70	2.14	27,000	154,000	1,530	1,070	22,000	14,600
4-7/16 4-1/2	0.53	0.87	1.63	0.70	1.97	33,600	188,400	1,360	950	27,000	—
4-15/16 5	0.47	0.87	1.83	0.70	2.21	46,400	266,000	1,200	840	35,000	—
5-7/16 5-15/16 6	0.49	0.87	1.76	0.70	2.12	44,000	354,000	915	640	42,400	—
6-7/16 6-1/2 6-15/16 7	0.54	0.87	1.61	0.70	1.95	72,000	574,000	790	550	72,000	—

Comparing spherical to taper roller bearings: The dynamic capacity C (spherical) and C_{90} (taper) are not to the same base.

To compare basic dynamic capacities, multiply C x .259 and compare to C_{90}.

* C_{90} - Dynamic capacity based on a rated life of 90 million revolutions or 3000 hours at 500 rpm.

** If load exceeds maximum allowable slip fit radial load, (F_R), line-to-line, to light press fit of shaft required. Application up to maximum slip fit radial load may be applied if recommended shaft tolerances are used.

*** E-Tect seal not compatible with Type EXL.

Type E family

Type E, Type EXL, TAF, Double Interlock, Type K

Table 3: Easy selection for Type E family

Shaft size (in)	L_{10} life hours	Allowable equivalent radial load (lbs) at various revolutions per minute																				
		50	100	150	250	500	790	915	1200	1360	1530	1640	1750	2060	2420	2730	3050	3320	3600	3820	4490
1-3/16 1-1/4	10,000	5409	4393	3890	3337	2711	2363	2261	2085	2008	1938	1898	1862	1773	1689	1629	1576	1536	1499	1473	1403
	30,000	3890	3160	2798	2400	1950	1700	1626	1499	1444	1394	1365	1339	1275	1215	1172	1133	1105	1078	1059	1009
	40,000	3568	2898	2566	2202	1788	1559	1492	1375	1325	1279	1252	1228	1169	1114	1075	1040	1013	989	972	926
	60,000	3160	2566	2273	1950	1584	1381	1321	1218	1173	1132	1109	1087	1036	987	952	921	897	876	860	820
	100,000	2711	2202	1950	1673	1359	1184	1133	1045	1006	971	951	933	888	847	816	790	770	751	738	703
1-3/8 1-7/16	10,000	8648	7025	6220	5336	4334	3779	3616	3333	3210	3099	3035	2977	2834	2701	2605	2520	2456	2397	2355	—
	30,000	6220	5052	4474	3838	3117	2718	2600	2397	2309	2229	2183	2141	2039	1942	1873	1812	1767	1724	1694	—
	40,000	5706	4634	4104	3521	2860	2493	2385	2199	2118	2045	2002	1964	1870	1782	1719	1662	1621	1582	1554	—
	60,000	5052	4104	3634	3117	2532	2207	2112	1947	1875	1810	1773	1739	1656	1578	1522	1472	1435	1400	1376	—
	100,000	4334	3521	3117	2674	2172	1894	1812	1671	1609	1553	1521	1492	1421	1354	1305	1263	1231	1202	1180	—
1-1/2 1-5/8 1-11/16	10,000	11123	9035	8000	6863	5575	4860	4650	4287	4129	3986	3904	3828	3646	3474	3350	3241	3159	—	—	—
	30,000	8000	6498	5754	4936	4009	3495	3345	3083	2970	2867	2808	2753	2622	2498	2410	2331	2272	—	—	—
	40,000	7339	5961	5278	4528	3678	3206	3068	2828	2724	2630	2575	2526	2405	2292	2210	2138	2084	—	—	—
	60,000	6498	5278	4674	4009	3257	2839	2717	2504	2412	2328	2280	2236	2130	2029	1957	1893	1846	—	—	—
	100,000	5575	4528	4009	3440	2794	2436	2331	2149	2069	1998	1956	1919	1827	1741	1679	1624	1583	—	—	—
1-3/4 1-7/8 1-15/16 2	10,000	14599	11858	10500	9008	7317	6379	6104	5627	5419	5231	5123	5025	4785	4559	4397	4253	—	—	—	—
	30,000	10500	8529	7552	6479	5262	4588	4390	4047	3898	3762	3685	3614	3441	3279	3163	3059	—	—	—	—
	40,000	9632	7823	6927	5943	4827	4208	4027	3712	3576	3451	3380	3315	3157	3008	2901	2806	—	—	—	—
	60,000	8529	6927	6134	5262	4274	3726	3566	3287	3166	3056	2993	2935	2795	2663	2569	2485	—	—	—	—
	100,000	7317	5943	5262	4515	3667	3197	3059	2820	2716	2622	2568	2518	2398	2285	2204	2132	—	—	—	—
2-3/16	10,000	15294	12423	11000	9437	7665	6682	6394	5895	5678	5480	5367	5264	5013	4776	4607	—	—	—	—	—
	30,000	11000	8935	7911	6787	5513	4806	4599	4240	4083	3942	3860	3786	3605	3435	3313	—	—	—	—	—
	40,000	10090	8196	7257	6226	5057	4409	4219	3889	3746	3616	3541	3473	3307	3151	3039	—	—	—	—	—
	60,000	8935	7257	6426	5513	4478	3904	3735	3444	3317	3202	3136	3075	2928	2790	2691	—	—	—	—	—
	100,000	7665	6226	5513	4730	3842	3349	3205	2954	2845	2747	2690	2638	2512	2394	2309	—	—	—	—	—
2-1/4 2-7/16 2-1/2	10,000	16407	13326	11800	10123	8223	7168	6859	6323	6090	5879	5758	5647	5377	5123	—	—	—	—	—	—
	30,000	11800	9585	8487	7281	5914	5156	4933	4548	4380	4228	4141	4061	3867	3685	—	—	—	—	—	—
	40,000	10824	8792	7785	6679	5425	4729	4525	4172	4018	3879	3799	3725	3548	3380	—	—	—	—	—	—
	60,000	9585	7785	6893	5914	4804	4188	4007	3694	3558	3434	3364	3299	3141	2993	—	—	—	—	—	—
	100,000	8223	6679	5914	5074	4121	3593	3438	3169	3052	2946	2886	2830	2695	2568	—	—	—	—	—	—
2-11/16 2-3/4 2-15/16 3	10,000	17380	14117	12500	10724	8711	7594	7266	6699	6452	6228	6099	5982	5696	—	—	—	—	—	—	—
	30,000	12500	10153	8990	7713	6265	5462	5226	4818	4640	4479	4387	4302	4097	—	—	—	—	—	—	—
	40,000	11466	9314	8247	7075	5747	5010	4794	4419	4257	4109	4024	3946	3758	—	—	—	—	—	—	—
	60,000	10153	8247	7302	6265	5089	4436	4245	3913	3769	3638	3563	3494	3328	—	—	—	—	—	—	—
	100,000	8711	7075	6265	5375	4366	3806	3642	3357	3234	3121	3057	2998	2855	—	—	—	—	—	—	—
3-3/16 3-1/4 3-7/16 3-1/2	10,000	27808	22587	20000	17158	13937	12150	11626	10718	10323	9964	9759	—	—	—	—	—	—	—	—	—
	30,000	20000	16245	14384	12341	10024	8738	8362	7708	7424	7167	7019	—	—	—	—	—	—	—	—	—
	40,000	18346	14902	13195	11320	9195	8016	7670	7071	6810	6574	6439	—	—	—	—	—	—	—	—	—
	60,000	16245	13195	11684	10024	8142	7098	6792	6261	6030	5821	5701	—	—	—	—	—	—	—	—	—
	100,000	13937	11320	10024	8600	6985	6089	5827	5372	5174	4994	4891	—	—	—	—	—	—	—	—	—
3-15/16 4	10,000	37541	30492	27000	23164	18815	16402	15695	14469	13936	13452	—	—	—	—	—	—	—	—	—	—
	30,000	27000	21931	19419	16660	13532	11797	11288	10406	10023	9675	—	—	—	—	—	—	—	—	—	—
	40,000	24767	20117	17813	15282	12413	10821	10355	9546	9194	8875	—	—	—	—	—	—	—	—	—	—
	60,000	21931	17813	15773	13532	10991	9582	9169	8453	8141	7858	—	—	—	—	—	—	—	—	—	—
	100,000	18815	15282	13532	11609	9430	8221	7866	7252	6984	6742	—	—	—	—	—	—	—	—	—	—

For maximum rpm see Table 2.
In the shaded area, E, DI, EXL, and TAF mounted units require a line-to-line to light press fit of shaft.
In the boxed area, Type K mounted units require a line-to-line to light press fit of shaft.

Type E family

Type E, Type EXL, TAF, Double Interlock, Type K

Table 3: Easy selection for Type E family

Shaft size (in)	L_{10} life hours	Allowable equivalent radial load (lbs) at various revolutions per minute																			
		50	100	150	250	500	790	915	1200	1360	1530	1640	1750	2060	2420	2730	3050	3320	3600	3820	4490
4-7/16 4-1/2	10,000	46717	37946	33600	28826	23414	20412	19532	18006	17342	—	—	—	—	—	—	—	—	—	—	—
	30,000	33600	27292	24166	20732	16840	14681	14048	12950	12473	—	—	—	—	—	—	—	—	—	—	—
	40,000	30822	25035	22168	19018	15447	13467	12886	11879	11442	—	—	—	—	—	—	—	—	—	—	—
	60,000	27292	22168	19629	16840	13678	11924	11410	10519	10131	—	—	—	—	—	—	—	—	—	—	—
	100,000	23414	19018	16840	14447	11735	10230	9789	9024	8692	—	—	—	—	—	—	—	—	—	—	—
4-15/16 5	10,000	64514	52402	46400	39807	32334	28188	26972	24865	—	—	—	—	—	—	—	—	—	—	—	—
	30,000	46400	37689	33372	28630	23255	20273	19399	17884	—	—	—	—	—	—	—	—	—	—	—	—
	40,000	42563	34572	30613	26263	21332	18597	17795	16405	—	—	—	—	—	—	—	—	—	—	—	—
	60,000	37689	30613	27106	23255	18889	16467	15757	14526	—	—	—	—	—	—	—	—	—	—	—	—
	100,000	32334	26263	23255	19951	16205	14127	13518	12462	—	—	—	—	—	—	—	—	—	—	—	—
5-7/16 5-15/16 6	10,000	61177	49691	44000	37748	30661	26730	25577	—	—	—	—	—	—	—	—	—	—	—	—	—
	30,000	44000	35739	31646	27149	22052	19225	18396	—	—	—	—	—	—	—	—	—	—	—	—	—
	40,000	40362	32784	29029	24905	20229	17635	16875	—	—	—	—	—	—	—	—	—	—	—	—	—
	60,000	35739	29029	25704	22052	17912	15615	14942	—	—	—	—	—	—	—	—	—	—	—	—	—
	100,000	30661	24905	22052	18919	15367	13397	12819	—	—	—	—	—	—	—	—	—	—	—	—	—
6-7/16 6-1/2 6-15/16 7	10,000	100108	81313	72000	61770	50173	43739	—	—	—	—	—	—	—	—	—	—	—	—	—	—
	30,000	72000	58482	51784	44426	36085	31458	—	—	—	—	—	—	—	—	—	—	—	—	—	—
	40,000	66047	53647	47502	40753	33102	28857	—	—	—	—	—	—	—	—	—	—	—	—	—	—
	60,000	58482	47502	42062	36085	29311	25552	—	—	—	—	—	—	—	—	—	—	—	—	—	—
	100,000	50173	40753	36085	30958	25146	21922	—	—	—	—	—	—	—	—	—	—	—	—	—	—

For maximum rpm see Table 2.
In the shaded area, E, DI, EXL, and TAF mounted units require a line-to-line to light press fit of shaft.
In the boxed area, Type K mounted units require a line-to-line to light press fit of shaft.

Type E family

Type E, Type EXL, TAF, Double Interlock, Type K

Table 4: Permissible thrust load, lbs*

Shaft size (in)	*E		*K/DI, TAF, EXL	
	2-bolt	4-bolt	2-bolt	4-bolt
1-3/16	2000	—	1400	—
1-1/4	2000	—	1400	—
1-3/8	2590	—	2590	—
1-7/16	2590	—	2590	—
1-1/2	2590	—	2590	—
1-5/8	2590	—	2590	—
1-11/16	2590	—	2590	—
1-3/4	3454	—	3454	—
1-7/8	3454	—	3454	—
1-15/16	3454	—	3454	—
2	3454	—	3454	—
2-3/16	3454	—	3454	—
2-1/4	3454	3454	3454	3454
2-7/16	3454	3454	3454	3454
2-1/2	3454	3454	3454	3454
2-11/16	5181	5181	5181	5181
2-3/4	5181	5181	5181	5181
2-15/16	5181	5181	5181	5181
3	5181	5181	5181	5181
3-3/16	5181	5181	4300	5181
3-1/4	5181	5181	4300	5181
3-7/16	5181	5181	4300	5181
3-1/2	5181	5181	4300	5181
3-15/16	—	6908	—	6908
4	—	6908	—	6908
4-7/16	—	6908	—	6908
4-1/2	—	6908	—	6908
4-15/16	—	6908	—	6908
5	—	6908	—	6908
5-7/16	—	8635	—	8635
5-15/16	—	8635	—	8635
6	—	8635	—	8635
6-7/16	—	12282	—	12282
6-1/2	—	12282	—	12282
6-15/16	—	12282	—	12282
7	—	12282	—	12282

The limits above apply to set screw shaft mounting or pillow block over turning force. Under heavy thrust loads it is always wise to use shear bars.
At all times, the L_{10} life of the bearing should be checked for proper selection and life requirements.
For thrust loads larger than listed or heavy thrust loading on other style housing, contact Application Engineering for recommendations.

* Does not include piloted flange.
Piloted flange up to and including 3-1/2" and all sizes of Type K only have one set screw locking collar and therefore the above listed permissible thrust load values must be decreased by 1/2.

Type E family

Type E, Type EXL, TAF, Double Interlock, Type K

Table 5: Type K, DI, TAF, EXL maximum axial expansion

Bore size (in)	Type K Double Interlock		TAF	Type EXL
	Pillow block	Flange		
1-3/16—1-1/4	0.252	—	—	0.280
1-3/8—1-7/16	0.188	0.187	0.188	0.280
1-1/2—1-11/16	0.188	0.187	0.188	0.280
1-3/4—2	0.562	0.187	0.562	0.280
2-3/16	0.562	0.187	0.562	0.280
2-1/4—2-1/2	0.562	0.312	0.562	0.280
2-11/16—3	0.562	0.312	0.562	0.280
3-3/16—3-1/2	0.562	0.312	0.562	0.280
3-15/16—4	0.674	0.312	0.674	0.280
4-7/16—4-1/2	0.674	0.812	0.674	0.280
4-15/16—5	0.674	0.812	0.674	0.280
5-7/16—6	0.500	—	0.875	—
6-7/16—7	0.500	—	0.875	—

Table 6: Definition of operating conditions for tapered roller bearings

Low speed	Up to 20% of max. rpm (Table 2)
Medium speed	Over 20% to 80% of max. rpm
High speed	Over 80% of max. rpm
Light load	Up to 30% of C_{90} (Table 2)
Normal load	Over 30% to 70% of C_{90}
Heavy load	Over 70% of C_{90}
Low temperature	-100 °F to 20 °F
Medium temperature	Over 20 °F to 200 °F
High temperature	Over 200 °F to 300 °F
Very high temperature	Over 300 °F to 400 °F

Type E family

Type E

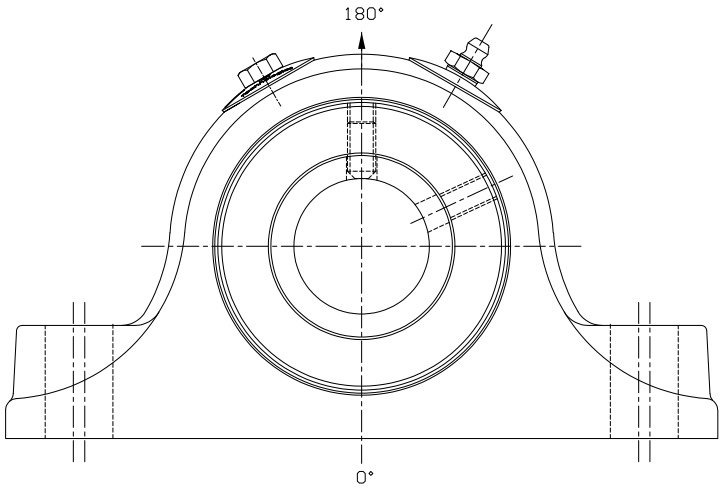

Table 7: Housing ratings - Type E (solid housing)

Shaft size (in)	Maximum recommended housing cap loads, lbs gray iron 180°
1-3/16—1-1/4	1,600
1-3/8—1-7/16	3,150
1-1/2—1-11/16	3,000
1-3/4—2	5,150
2-3/16	3,500
2-1/4—2-1/2	6,550
2-11/16—3	7,000
3-3/16—3-1/2	15,700
3-15/16—4	16,250
4-7/16—4-1/2	21,000
4-15/16—5	22,860
5-7/16—6	43,600
6-7/16—7	46,000

* When utilizing heavy cap loads on pillow block housings, the installation must adhere to the following procedures:
1. The pillow block base bolts must be of Grade 8 strength with hardened washers and properly tightened to the mounting structure.
2. The use of stop bars (shear strips) against pillow block where side loads are encountered.
3. In all cases where loads are heavy, the L_{10} life of the bearing should be checked for proper selection and life requirements.

Type E family

Type EXL, TAF, Double Interlock, Type K

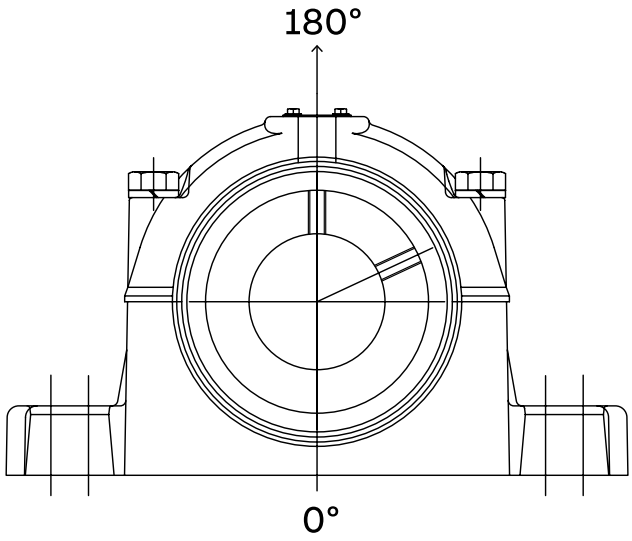

Table 8: Housing ratings for Type EXL, Double Interlock, Type K (split housing)

Shaft size (in)	Maximum recommended housing cap loads, lbs 180°
1-3/16—1-1/4	4,300
1-3/8—1-7/16	5,060
1-1/2—1-11/16	5,940
1-3/4—2	8,660
2-3/16	10,100
2-1/4—2-1/2	10,100
2-11/16—3	11,220
3-3/16—3-1/2	16,170
3-15/16—4	19,580
4-7/16—4-1/2	20,130
4-15/16—5	24,530
5-7/16—6	35,200
6-7/16—7	56,000

Table 9: Housing ratings for TAF (split housing)

Shaft size (in)	Maximum recommended housing cap loads, lbs 180°
1-7/16	4,600
1-11/16	5,400
1-15/16	7,875
2-3/16	9,200
2-7/16—2-1/2	9,220
2-15/16—3	10,200
3-7/16—3-1/2	14,700
3-15/16—4	17,800
4-7/16—4-1/2	18,300
4-15/16—5	22,300
5-7/16—6	30,000
6-7/16—6-1/2	30,000
6-15/16—7	48,000

* When utilizing heavy cap loads on pillow block housings, the installation must adhere to the following procedures:
1. The pillow block base bolts must be of Grade 8 strength with hardened washers and properly tightened to the mounting structure.
2. The use of stop bars (shear strips) against pillow block where side loads are encountered.
3. In all cases where loads are heavy, the L_{10} life of the bearing should be checked for proper selection and life requirements.

Type E family

Type E, Type EXL, TAF, Double Interlock, Type K

Mounted bearings
Application data sheet

Instructions: Complete all applicable information and email to engineering@support.dodgeindustrial.com

Company _____ Dist ☐ User ☐ OEM ☐ Date _____

Address _____

Name _____ Phone _____ Fax _____

Type of equipment (sketch drive on separate sheet) _____

Service conditions:

Shaft speed: Normal _____ Maximum _____

Loads: Radial _____ Thrust _____ Shock (frequency _____

Shaft size: _____ Shaft tolerance (specify if not commercial) _____

Duty cycle: Hours/day _____ Days/week _____ Weeks/year _____

Environment:

Ambient temperature: _____

External heat: Source of heat _____

Temperature _____ °F Winter _____ °F

Air: Clean _____ Contaminated _____ Contamination type _____

Gas: Clean _____ Contaminated _____ Contamination type _____

Liquid: Type _____ Contaminated _____ Contamination type _____

Other (including washdowns): _____

Experience (if applicable):

Type of bearing currently used: _____

Life realized _____ Type of failure _____

Other pertinent data:

_____

_____

_____

L_{10} hours required: _____

Dimensional restrictions:

Centerline height _____

Bolt pattern _____

Other _____

Dimensions

Type E pillow block – inch

2-bolt

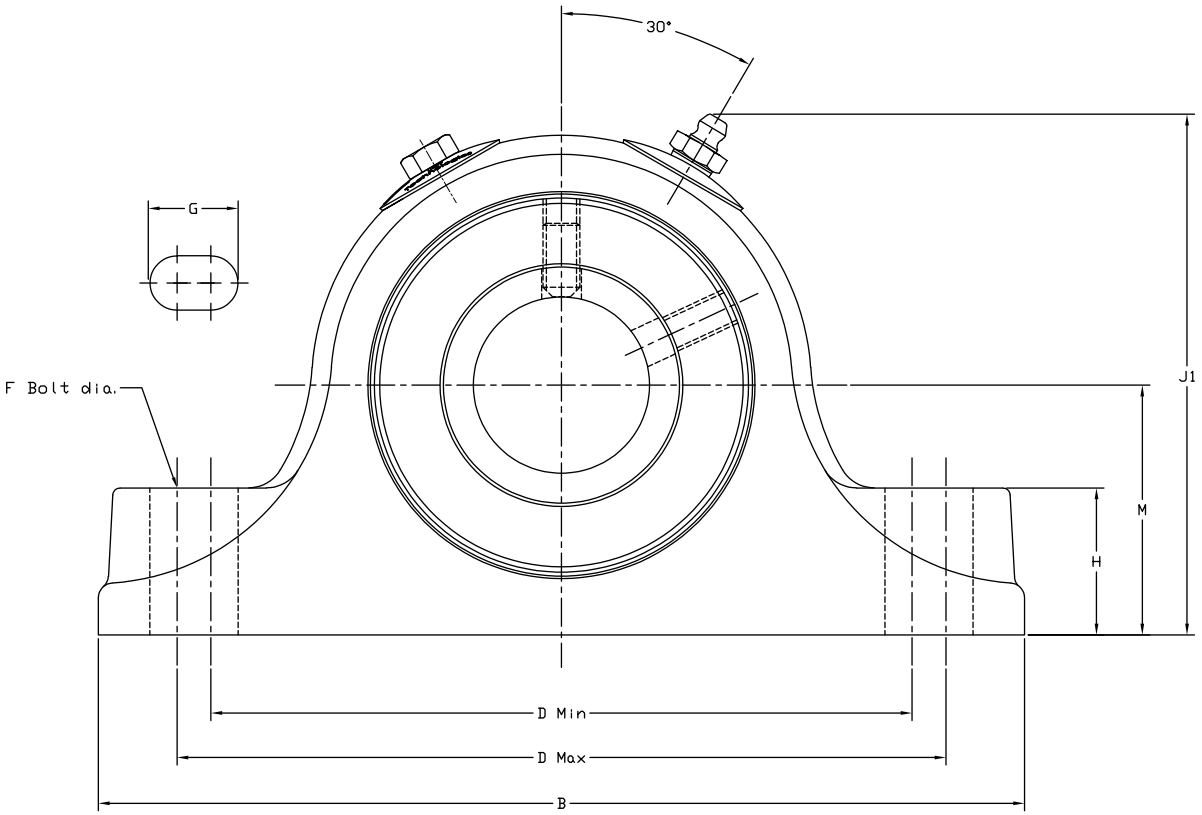

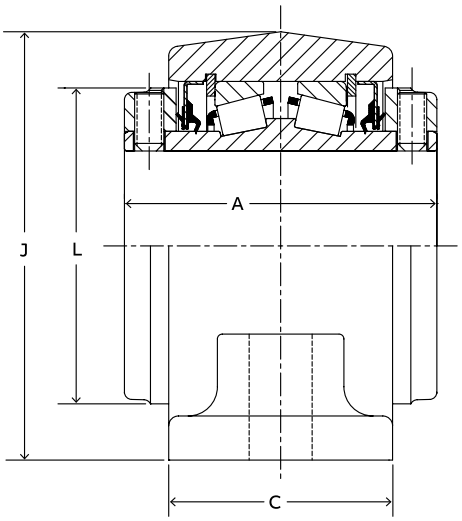

1-3/16" thru 3-1/2" Construction

Type E pillow block – inch

2-bolt

Standard			All
Shaft size	**Part number**	**Description**	**Approx. weight (lbs)**
1-3/16	023000	P2B-E-103R	4
1-1/4	023001	P2B-E-104R	4
1-3/8	023002	P2B-E-106R	7
1-7/16	023003	P2B-E-107R	7
1-1/2	023004	P2B-E-108R	10
1-5/8	023005	P2B-E-110R	10
1-11/16	023006	P2B-E-111R	10
1-3/4	023007	P2B-E-112R	12
1-7/8	023008	P2B-E-114R	12
1-15/16	023009	P2B-E-115R	12
2	023010	P2B-E-200R	12
2-3/16	023011	P2B-E-203R	15
2-1/4	023012	P2B-E-204R	21
2-7/16	023013	P2B-E-207R	20
2-1/2	023014	P2B-E-208R	20
2-11/16	023015	P2B-E-211R	29
2-3/4	023016	P2B-E-212R	28
2-15/16	023017	P2B-E-215R	27
3	023018	P2B-E-300R	27
3-3/16	023019	P2B-E-303R	48
3-1/4	023020	P2B-E-304R	47
3-7/16	023021	P2B-E-307R	46
3-1/8	023022	P2B-E-308R	45

Contact Dodge for availability of any not listed.

Shaft size	A	B	C	D		F bolt dia	G	H	J	J1	L	M
				Min	Max							
1-3/16 1-1/4	2.75	6.00	1.88	4.75	4.81	1/2	0.59	0.88	3.00	3.28	2.25	1.50
1-3/8 1-7/16	3.00	7.38	2.13	5.63	5.88	1/2	0.75	1.13	3.75	4.00	2.75	1.88
1-1/2 1-5/8 1-11/16	3.38	7.88	2.38	6.13	6.38	1/2	0.75	1.25	4.25	4.47	3.19	2.13
1-3/4 1-7/8 1-15/16 2	3.50	8.88	2.50	6.88	7.13	5/8	0.88	1.31	4.50	4.69	3.44	2.25
2-3/16	3.75	9.63	2.63	7.63	7.88	5/8	0.88	1.50	5.00	5.17	3.75	2.50
2-1/4 2-7/16 2-1/2	4.00	10.50	2.88	8.38	8.63	5/8	0.88	1.63	5.50	5.63	4.06	2.75
2-11/16 2-3/4 2-15/16 3	4.50	12.00	3.00	9.31	9.69	3/4	1.00	1.88	6.25	6.34	4.72	3.13
3-3/16 3-1/4 3-7/16 3-1/2	5.00	14.00	3.50	10.81	11.19	7/8	1.19	2.25	7.50	7.50	5.50	3.75

Note: All sizes use a 1/8-27 NPT hydraulic grease fitting.

Type E pillow block – inch

4-bolt

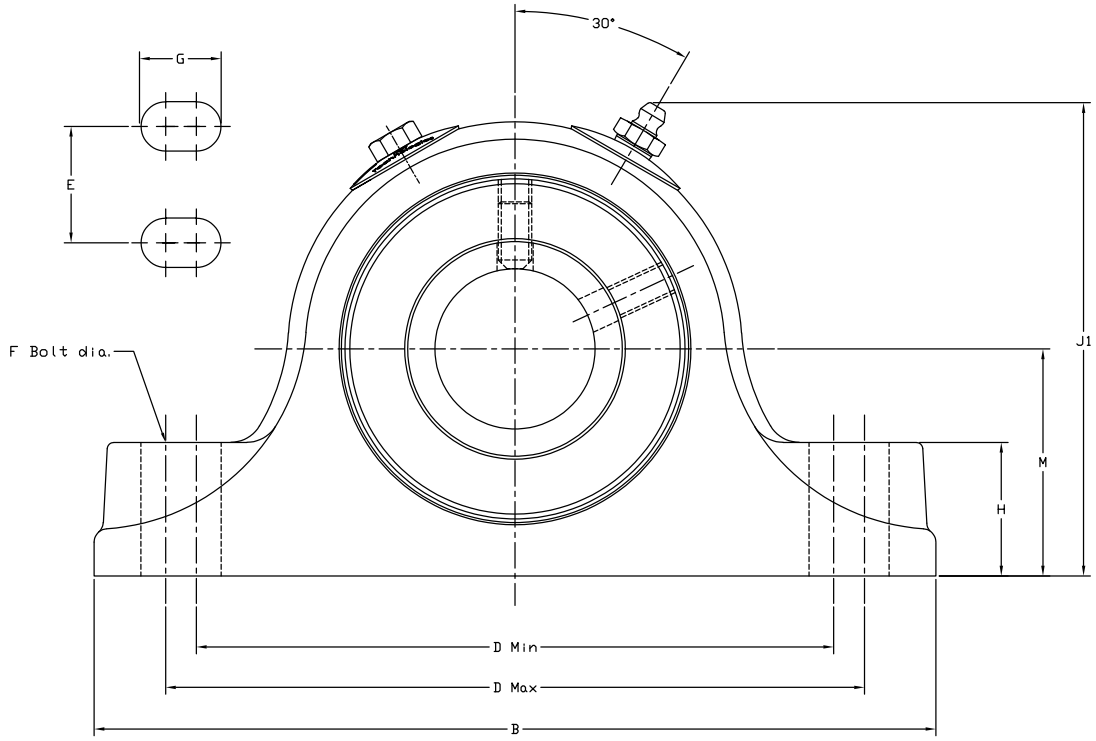

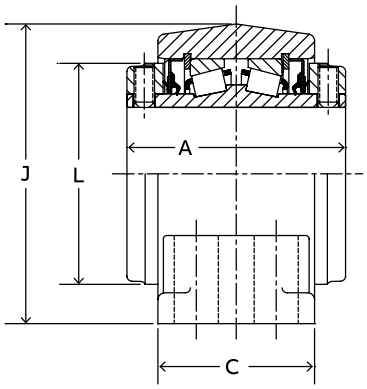

2-1/4" thru 3-1/2"Construction

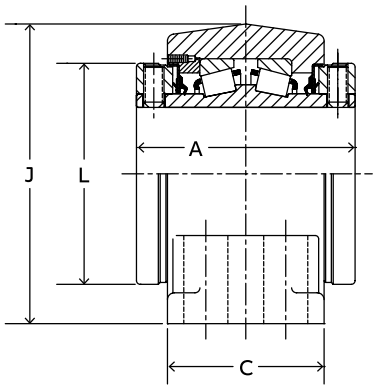

3-15/16" thru 5" Construction

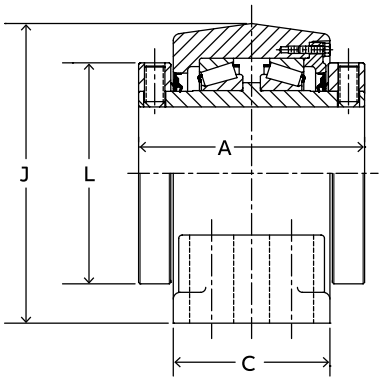

5-7/16" thru 7" Construction

Type E pillow block – inch

4-bolt

Standard

Shaft size	Part number	Description	Approx. weight (lbs)
2-1/4	023023	P4B-E-204R	20
2-7/16	023024	P4B-E-207R	20
2-1/2	023025	P4B-E-208R	19
2-11/16	023026	P4B-E-211R	30
2-3/4	023027	P4B-E-212R	28
2-15/16	023028	P4B-E-215R	28
3	023029	P4B-E-300R	28
3-3/16	023030	P4B-E-303R	47
3-1/4	023031	P4B-E-304R	47
3-7/16	023032	P4B-E-307R	46
3-1/2	023033	P4B-E-308R	45
3-15/16	023690	P4B-E-315R	69
4	023691	P4B-E-400R	69
4-7/16	023692	P4B-E-407R	85
4-1/2	023693	P4B-E-408R	85
4-15/16	023694	P4B-E-415R	134
5	023695	P4B-E-500R	133
5-7/16	023040	P4B-E-507R	230
5-15/16	023041	P4B-E-515R	250
6	023042	P4B-E-600R	245
6-7/16	023043	P4B-E-607R	356
6-1/2	023044	P4B-E-608R	350
6-15/16	023045	P4B-E-615R	340
7	023046	P4B-E-700R	335

Contact Dodge for availability of any not listed.

Shaft size	A	B	C	D		E	F bolt dia.	G	H	J1	J	L	M
				Min.	Max.								
2-1/4 2-7/16 2-1/2	4.00	10.50	3.50	8.31	8.69	1.88	5/8	0.88	1.63	5.50	5.63	4.06	2.75
2-11/16 2-3/4 2-15/16 3	4.50	12.00	4.00	9.19	9.81	2.13	5/8	1.00	1.88	6.25	6.34	4.72	3.13
3-3/16 3-1/4 3-7/16 3-1/2	5.00	13.50	4.50	10.75	11.25	2.38	3/4	1.19	2.25	7.50	7.50	5.50	3.75
3-15/16 4	6.25	15.25	4.50	12.25	12.75	2.25	3/4	1.13	2.44	8.50	8.44	6.00	4.25
4-7/16 4-1/2	6.75	16.63	4.63	13.25	13.75	2.50	3/4	1.13	2.75	9.38	9.28	6.45	4.75
4-15/16 5	7.25	18.50	5.13	15.25	15.75	2.88	7/8	1.25	3.00	10.88	10.69	7.45	5.50
5-7/16 5-15/16 6	9.00	22.00	6.25	17.38	19.13	3.75	1	2.00	3.25	13.19	—	9.38	6.69
6-7/16 6-1/2 6-15/16 7	10.50	26.00	7.13	21.25	23.25	4.63	1	2.00	3.69	14.94	—	11.38	7.50

Note: All sizes use a 1/8-27 NPT hydraulic grease fitting.

Type E flange – inch

4-bolt

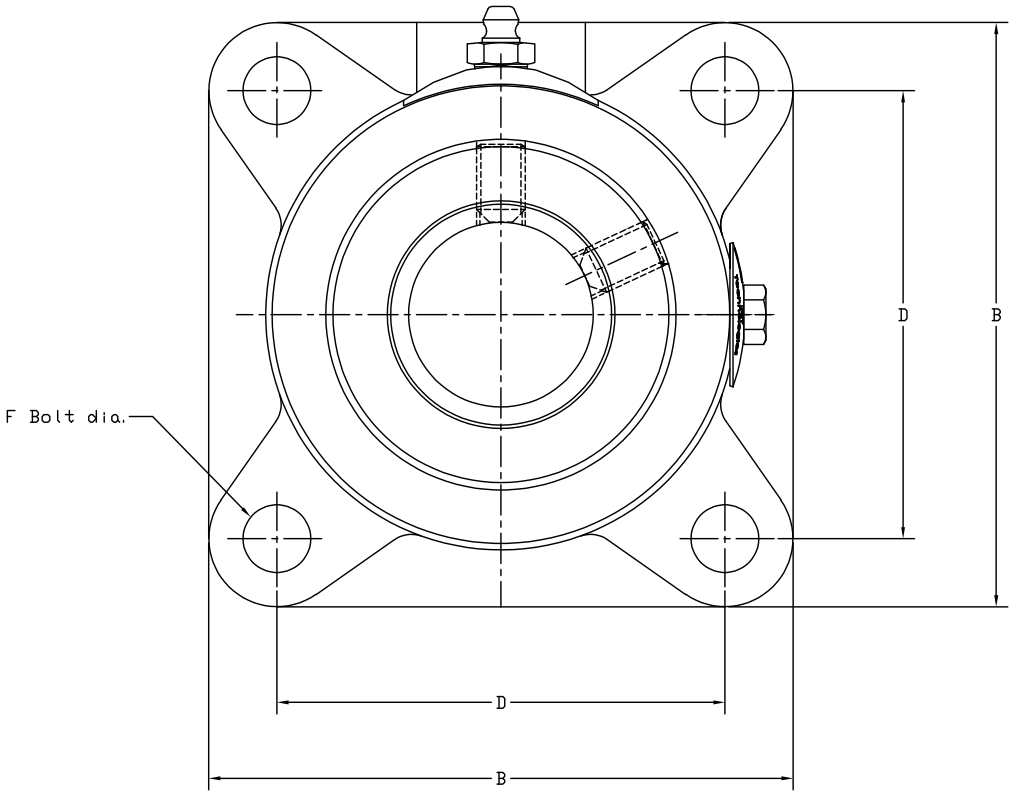

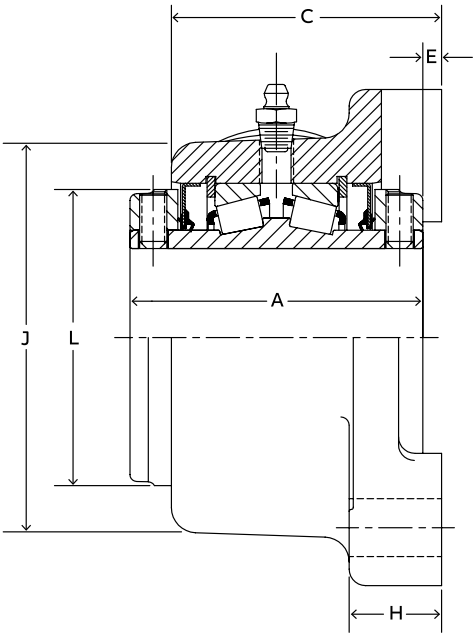

1-3/16" thru 3" Construction

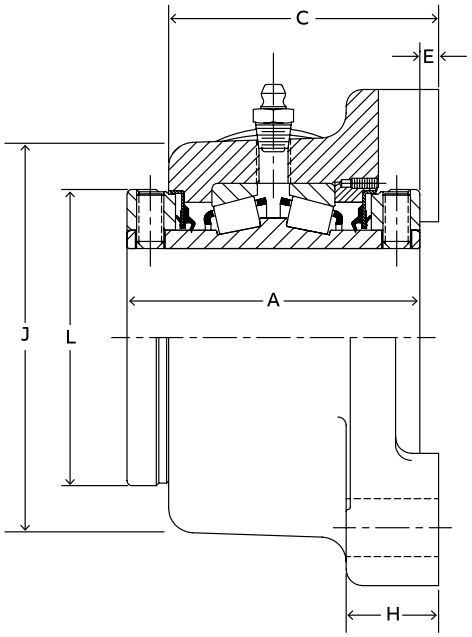

3-3/16" thru 4-1/2" Construction

Type E flange – inch

4-bolt

Gray iron

Shaft size	Part number	Description	Approx. weight (lbs)
1-3/16	023093	F4B-E-103R	4
1-1/4	023094	F4B-E-104R	4
1-3/8	023095	F4B-E-106R	7
1-7/16	023096	F4B-E-107R	7
1-1/2	023097	F4B-E-108R	11
1-5/8	023098	F4B-E-110R	11
1-11/16	023099	F4B-E-111R	11
1-3/4	023100	F4B-E-112R	12
1-7/8	023101	F4B-E-114R	12
1-15/16	023102	F4B-E-115R	12
2	023103	F4B-E-200R	12
2-3/16	023104	F4B-E-203R	15
2-1/4	023105	F4B-E-204R	21
2-7/16	023106	F4B-E-207R	20
2-1/2	023107	F4B-E-208R	19
2-11/16	023108	F4B-E-211R	28
2-3/4	023109	F4B-E-212R	28
2-15/16	023110	F4B-E-215R	27
3	023111	F4B-E-300R	26
3-3/16	023112	F4B-E-303R	52
3-1/4	023113	F4B-E-304R	51
3-7/16	023114	F4B-E-307R	50
3-1/2	023115	F4B-E-308R	50
3-15/16	023116	F4B-E-315R	75
4	023117	F4B-E-400R	75
4-7/16	023118	F4B-E-407R	90
4-1/2	023119	F4B-E-408R	90

Shaft size	A	B	C	D	E	F bolt dia.	H	J	L
1-3/16 1-1/4	2.75	3.75	2.34	2.88	0.06	3/8	1.00	2.94	2.25
1-3/8 1-7/16	3.00	4.63	2.59	3.50	0.06	1/2	1.06	3.50	2.75
1-1/2 1-5/8 1-11/16	3.38	5.38	2.97	4.13	0.13	1/2	1.19	4.19	3.19
1-3/4 1-7/8 1-15/16 2	3.50	5.63	3.09	4.38	0.13	1/2	1.19	4.44	3.44
2-3/16	3.75	6.25	3.28	4.88	0.13	5/8	1.38	4.88	3.75
2-1/4 2-7/16 2-1/2	4.00	6.88	3.56	5.38	0.19	5/8	1.50	5.31	4.06
2-11/16 2-3/4 2-15/16 3	4.50	7.75	3.94	6.00	0.19	3/4	1.63	6.00	4.72
3-3/16 3-1/4 3-7/16 3-1/2	5.00	9.25	4.50	7.00	0.25	3/4	1.88	7.25	5.50
3-15/16 4	6.25	10.25	5.63	7.75	0.25	7/8	2.13	8.25	6.00
4-7/16 4-1/2	6.75	10.88	5.94	8.75	0.34	7/8	2.44	8.75	6.45

Note: All sizes use a 1/8-27 NPT hydraulic grease fitting.

Type E piloted flange – inch

4-bolt

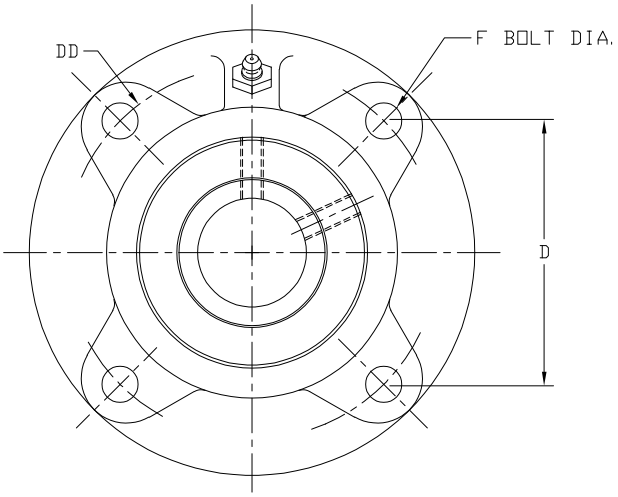

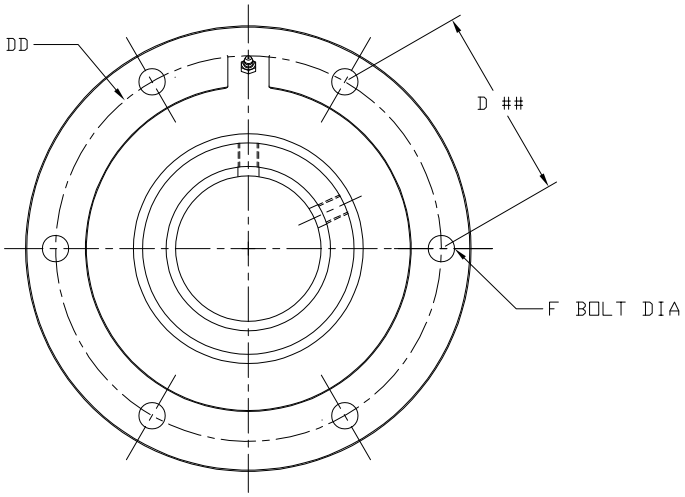

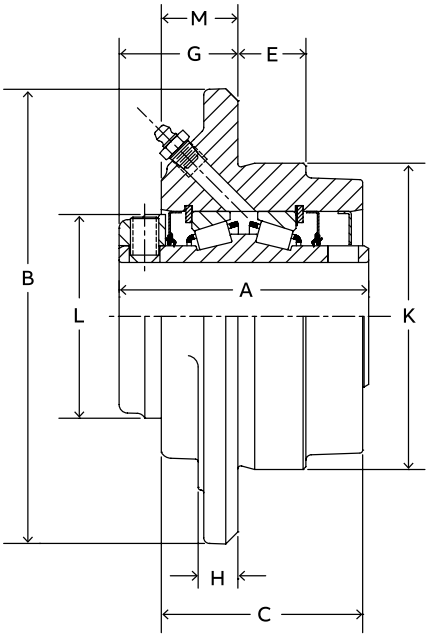

1-3/16” thru 3”
Construction

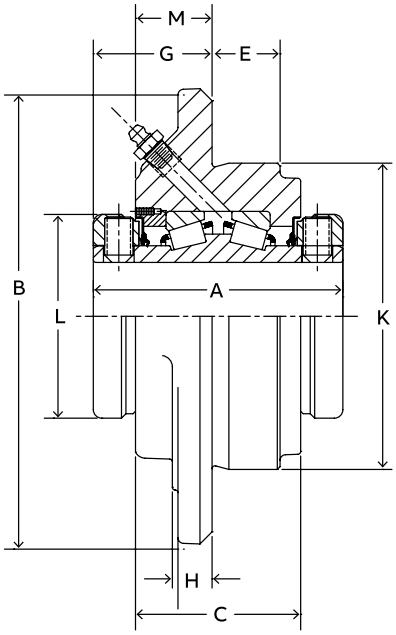

3-15/16” thru 5”
Construction

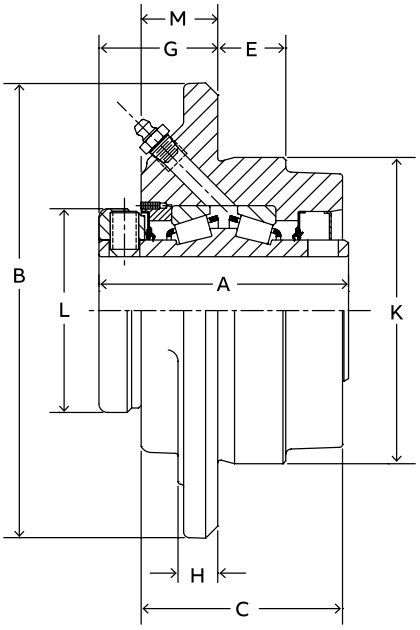

3-3/16” thru 3-1/2”
Construction

Type E piloted flange – inch

4-bolt

Gray iron

Shaft size	Part number	Description	Approx. weight (lbs)
1-3/16	023120	FC-E-103R	5
1-1/4	023121	FC-E-104R	5
1-3/8	023122	FC-E-106R	7
1-7/16	023123	FC-E-107R	6
1-1/2	023124	FC-E-108R	10
1-5/8	023125	FC-E-110R	9
1-11/16	023126	FC-E-111R	9
1-3/4	023127	FC-E-112R	11
1-7/8	023128	FC-E-114R	10
1-15/16	023129	FC-E-115R	10
2	023130	FC-E-200R	10
2-3/16	023131	FC-E-203R	14
2-1/4	023132	FC-E-204R	18
2-7/16	023133	FC-E-207R	18
2-1/2	023134	FC-E-208R	17
2-11/16	023135	FC-E-211R	27
2-3/4	023136	FC-E-212R	27
2-15/16	023137	FC-E-215R	25
3	023138	FC-E-300R	25
3-3/16	023139	FC-E-303R	44
3-1/4	023140	FC-E-304R	44
3-7/16	023141	FC-E-307R	43
3-1/2	023142	FC-E-308R	42
3-15/16	023143	FC-E-315R	59
4	023144	FC-E-400R	58
4-7/16 ##	023145	FC-E-407R	110
4-1/2 ##	023146	FC-E-408R	110
4-15/16 ##	023147	FC-E-415R	130
5 ##	023148	FC-E-500R	130

Shaft size	A	B	C	D	ØDD	E	F bolt ##	G	H	K**	L	M
1-3/16 1-1/4	2.75	5.00	2.22	2.92	4.13	0.75	3/8	1.31	0.44	3.38	2.25	0.84
1-3/8 1-7/16	3.00	5.25	2.47	3.09	4.38	0.88	3/8	1.50	0.50	3.63	2.75	1.03
1-1/2 1-5/8 1-11/16	3.38	6.13	2.39	3.62	5.13	1.06	7/16	1.56	0.50	4.25	3.19	1.03
1-3/4 1-7/8 1-15/16 2	3.50	6.38	2.91	3.80	5.38	1.19	7/16	1.56	0.56	4.50	3.44	1.03
2-3/16	3.75	7.13	3.09	4.24	6.00	1.19	1/2	1.69	0.56	5.00	3.75	1.09
2-1/4 2-7/16 2-1/2	4.00	7.63	3.31	4.60	6.50	1.31	1/2	1.81	0.63	5.50	4.06	1.19
2-11/16 2-3/4 2-15/16 3	4.50	8.75	3.69	5.30	7.50	1.50	5/8	2.00	0.75	6.38	4.72	1.25
3-3/16 3-1/4 3-7/16 3-1/2	5.00	10.25	4.19	6.10	8.63	1.25	3/4	2.44	0.94	7.38	5.50	1.69
3-15/16 4	6.25	10.88	4.50	6.63	9.38	1.50	3/4	2.69	1.00	8.13	6.00	1.81
4-7/16 4-1/2	6.75	13.50	4.63	##	11.75	1.50	3/4###	3.00	1.00	10.25	6.45	1.94
4-15/16 5	7.25	14.75	5.06	##	12.75	1.75	7/8##	2.97	1.25	11.00	7.45	1.88

* 1-3/16 to 3-1/2 – One collar
3-15/16 to 5 – Two collars

(6) Bolts equally spaced.

** +.000 to -.002

Note: All sizes use a 1/8-27 NPT hydraulic grease fitting.

Type E take-up – inch

Wide-slot (WS)

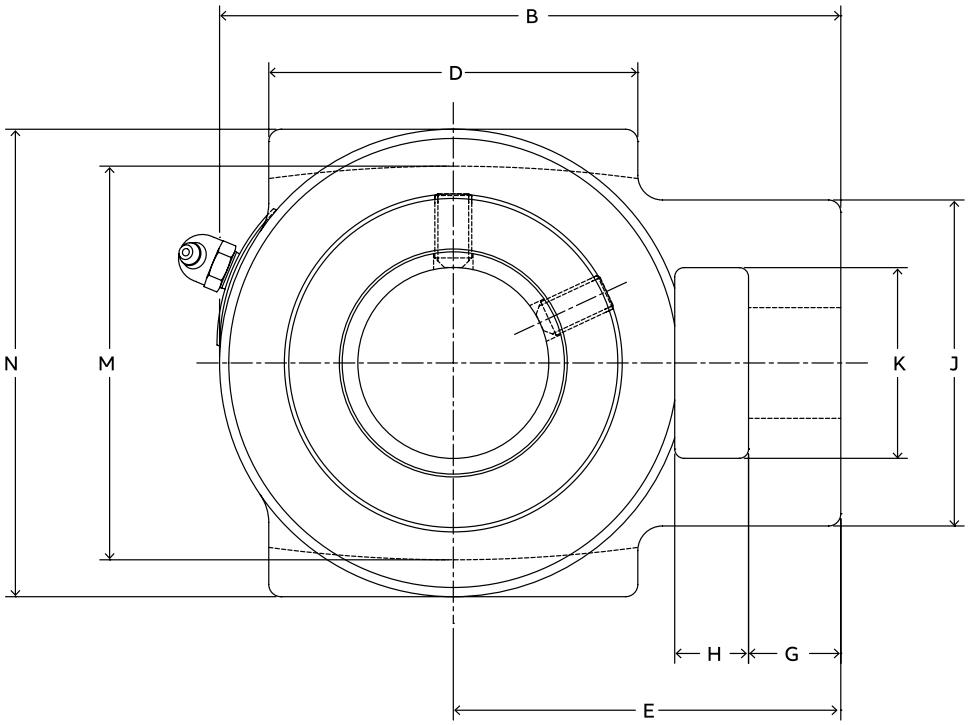

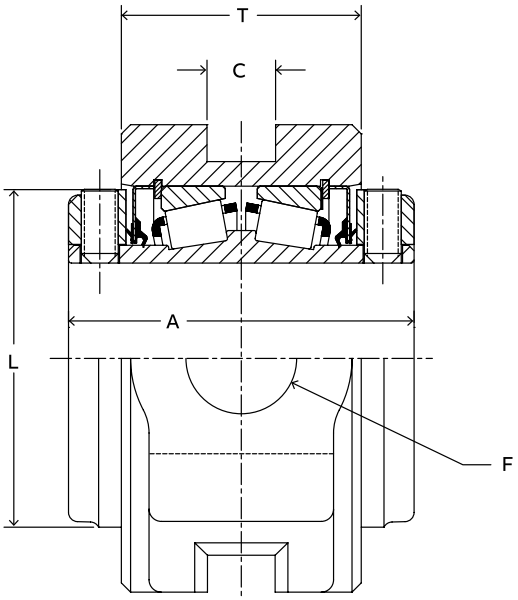

1-3/8” thru 3” Construction

Type E take-up – inch

Wide-slot (WS)

Standard			All	
Shaft size	**Part number**	**Description**	**Approx. weight (lbs)**	**Frame**
1-3/8	023076	WSTU-E-106R	8	CP308
1-7/16	023077	WSTU-E-107R	8	
1-1/2	023078	WSTU-E-108R	10	CP400
1-5/8	023079	WSTU-E-110R	10	
1-11/16	023080	WSTU-E-111R	10	
1-3/4	023081	WSTU-E-112R	12	CP400
1-7/8	023082	WSTU-E-114R	12	
1-15/16	023083	WSTU-E-115R	12	
2	023084	WSTU-E-200R	12	
2-3/16	023085	WSTU-E-203R	16	CP408
2-1/4	023086	WSTU-E-204R	21	CP502
2-7/16	023087	WSTU-E-207R	21	
2-1/2	023088	WSTU-E-208R	21	
2-11/16	023089	WSTU-E-211R	30	CP515
2-3/4	023090	WSTU-E-212R	30	
2-15/16	023091	WSTU-E-215R	30	
3	023092	WSTU-E-300R	30	

Contact Dodge for availability of any not listed.

Shaft size	A	B	C*	D	E	F screw dia.	G	H	J	K	L	M	N	T
1-3/8	3.00	5.09	0.53	2.75	3.22	3/4	0.69	0.63	2.44	1.44	2.75	3.50	4.13	2.06
1-7/16														
1-1/2	3.38	6.00	0.69	3.25	3.81	1	0.94	0.75	3.31	1.94	3.79	4.00	4.75	2.31
1-5/8														
1-11/16														
1-3/4	3.50	6.31	0.69	3.75	3.94	1	0.94	0.75	3.31	1.94	3.44	4.00	4.75	2.44
1-7/8														
1-15/16														
2														
2-3/16	3.75	7.13	0.81	3.75	4.63	1-1/8	1.00	1.25	3.88	2.25	3.75	4.50	5.25	2.56
2-1/4	4.00	7.81	1.06	4.50	5.06	1-1/4	1.06	1.25	4.25	2.50	4.06	5.13	6.00	2.75
2-7/16														
2-1/2														
2-11/16	4.50	9.13	1.81	4.75	5.88	1-1/2	1.13	1.50	4.88	2.75	4.72	5.94	6.75	3.00
2-3/4														
2-15/16														
3														

Note: All sizes use a 1/8-27 NPT hydraulic grease fitting.

* Slot is "as cast" dimension.

Type E take-up – inch

Top-angle (TP)

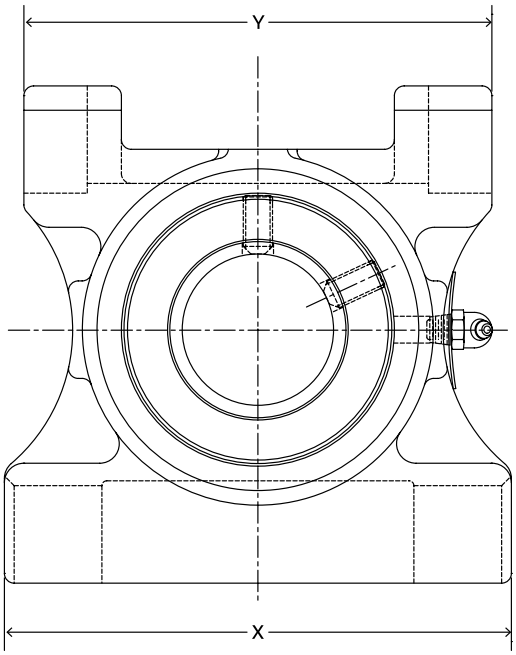

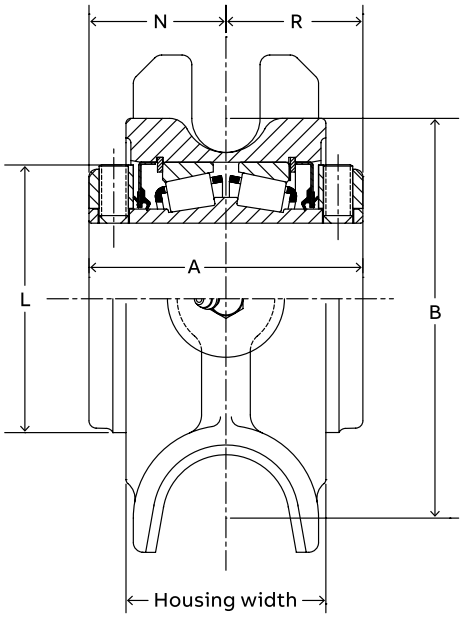

1-3/4” thru 3” Construction

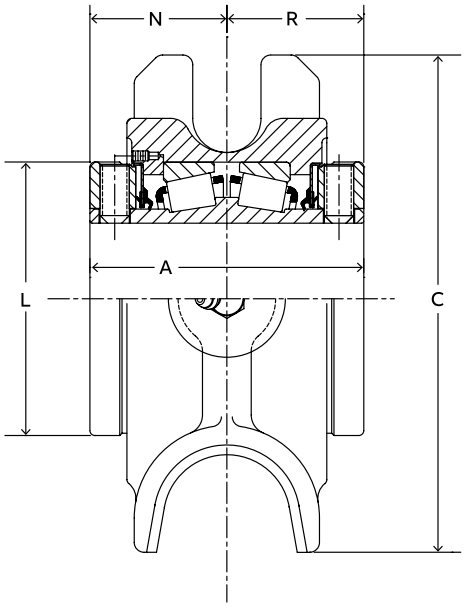

3-3/16” thru 4” Construction

Type E take-up – inch

Top-angle (TP)

Standard			All	
Shaft size	**Part number**	**Description**	**Approx. weight (lbs)**	**Frame size ref.**
1-3/4	023149	TP-E-112R	14	TP10
1-7/8	023150	TP-E-114R	14	TP10
1-15/16	023151	TP-E-115R	14	TP10
2	023152	TP-E-200R	14	TP10
2-3/16	023153	TP-E-203R	16	TP20
2-1/4	023154	TP-E-204R	21	TP30
2-7/16	023155	TP-E-207R	21	TP30
2-1/2	023156	TP-E-208R	21	TP30
2-11/16	023157	TP-E-211R	29	TP40
2-3/4	023158	TP-E-212R	29	TP40
2-15/16	023159	TP-E-215R	29	TP40
3	023160	TP-E-300R	29	TP40
3-3/16	023161	TP-E-303R	43	TP50
3-1/4	023162	TP-E-304R	43	TP50
3-7/16	023163	TP-E-307R	42	TP50
3-1/2	023164	TP-E-308R	42	TP50
3-15/16	023165	TP-E-315R	62	TP60
4	023166	TP-E-400R	62	TP60

Contact Dodge for availability of any not listed.

Shaft size	A	B	C	L	N	Housing width	X	Y
1-3/4	3.50	5.19	6.38	3.44	1.75	2.56	6.50	6.00
1-7/8								
1-15/16								
2								
2 -3/16	3.75	5.81	6.88	3.75	1.88	2.56	6.75	7.00
2 -1/4	4.00	6.25	7.44	4.06	2.00	3.00	7.50	7.00
2 -7/16								
2 -1/2								
2-11/16	4.50	7.19	8.31	4.72	2.25	3.00	8.50	8.00
2 -3/4								
2-15/16								
3								
3-3/16	5 .00	8.31	9.63	5.50	2.50	3.75	9.50	9.00
3-1/4								
3-7/16								
3-1/2								
3-15/16	6.25	9.06	11.00	6.00	3.13	4.75	11.00	10.50
4								

Note: All sizes use a 1/8-27 NPT hydraulic grease fitting.

Type EXL pillow block – inch

2-bolt

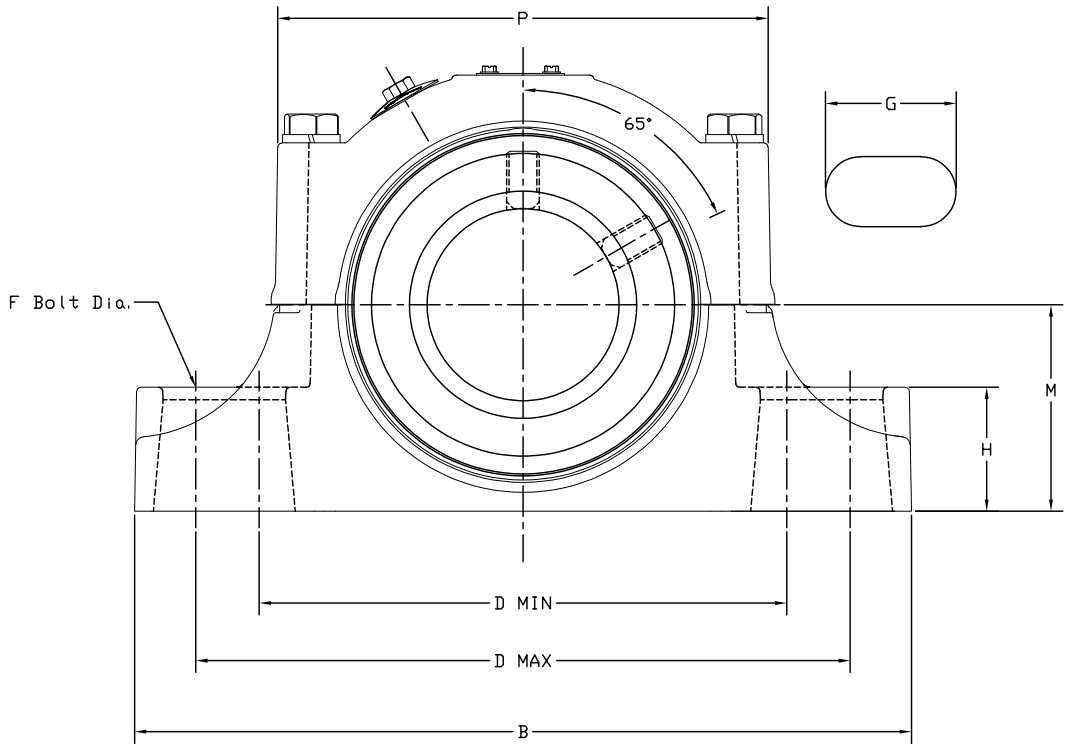

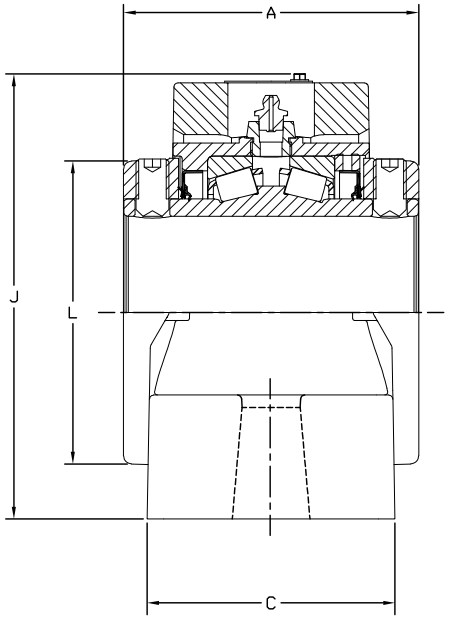

Type EXL pillow block – inch

2-bolt

Shaft size	Non-expansion part number	Description	Expansion part number	Description
1-3/16	077221	P2B-EXL-103R	077244	P2B-EXL-103RE
1-1/4	077222	P2B-EXL-104R	077245	P2B-EXL-104RE
1-3/8	077223	P2B-EXL-106R	077246	P2B-EXL-106RE
1-7/16	077224	P2B-EXL-107R	077247	P2B-EXL-107RE
1-1/2	077225	P2B-EXL-108R	077248	P2B-EXL-108RE
1-5/8	077226	P2B-EXL-110R	077249	P2B-EXL-110RE
1-11/16	077227	P2B-EXL-111R	077250	P2B-EXL-111RE
1-3/4	077228	P2B-EXL-112R	077251	P2B-EXL-112RE
1-7/8	077229	P2B-EXL-114R	077252	P2B-EXL-114RE
1-15/16	077230	P2B-EXL-115R	077253	P2B-EXL-115RE
2	077231	P2B-EXL-200R	077254	P2B-EXL-200RE
2-3/16	077232	P2B-EXL-203R	077255	P2B-EXL-203RE
2-1/4	077233	P2B-EXL-204R	077256	P2B-EXL-204RE
2-7/16	077234	P2B-EXL-207R	077257	P2B-EXL-207RE
2-1/2	077235	P2B-EXL-208R	077258	P2B-EXL-208RE
2-11/16	077236	P2B-EXL-211R	077259	P2B-EXL-211RE
2-3/4	077237	P2B-EXL-212R	077260	P2B-EXL-212RE
2-15/16	077238	P2B-EXL-215R	077261	P2B-EXL-215RE
3	077239	P2B-EXL-300R	077262	P2B-EXL-300RE
3-3/16	077240	P2B-EXL-303R	077263	P2B-EXL-303RE
3-1/4	077241	P2B-EXL-304R	077264	P2B-EXL-304RE
3-7/16	077242	P2B-EXL-307R	077265	P2B-EXL-307RE
3-1/2	077243	P2B-EXL-308R	077266	P2B-EXL-308RE

Shaft size	Approx. weight (lbs)	A	B	C	D		F bolt dia.	G	H	J	L	M	P	EXP*
					Min.	Max.								
1-3/16	10	2.75	6.25	1.88	4.56	4.94	1/2	0.75	0.88	3.51	2.25	1.50	4.06	0.56
1-1/4	10													
1-3/8	12	3.00	7.25	2.19	5.31	5.94	1/2	0.94	1.13	4.17	2.75	1.88	4.63	0.56
1-7/16	12													
1-1/2	12	3.38	7.75	2.37	5.56	6.44	1/2	1.07	1.25	4.69	3.19	2.13	5.13	0.56
1-5/8	15													
1-11/16	15													
1-3/4	15	3.50	8.88	2.54	6.31	7.19	5/8	1.19	1.31	4.99	3.44	2.25	5.56	0.56
1-7/8	19													
1-15/16	19													
2	19													
2-3/16	24	3.75	9.62	2.65	6.69	7.94	5/8	1.38	1.50	5.42	3.75	2.50	6.00	0.56
2-1/4	24	4.00	10.38	2.88	6.94	8.69	5/8	1.63	1.63	6.08	4.06	2.75	6.41	0.56
2-7/16	29													
2-1/2	29													
2-11/16	42	4.50	11.75	3.32	8.06	10.00	3/4	1.85	1.88	6.77	4.72	3.13	7.50	0.56
2-3/4	42													
2-15/16	43													
3	43													
3-3/16	73	5.00	13.75	4.00	10.12	11.75	7/8	1.82	2.25	7.97	5.50	3.75	9.31	0.56
3-1/4	73													
3-7/16	73													
3-1/2	73													

* EXP = Total expansion divided equally on both sides of bearing (expansion bearing only).

Type EXL pillow block – inch

4-bolt

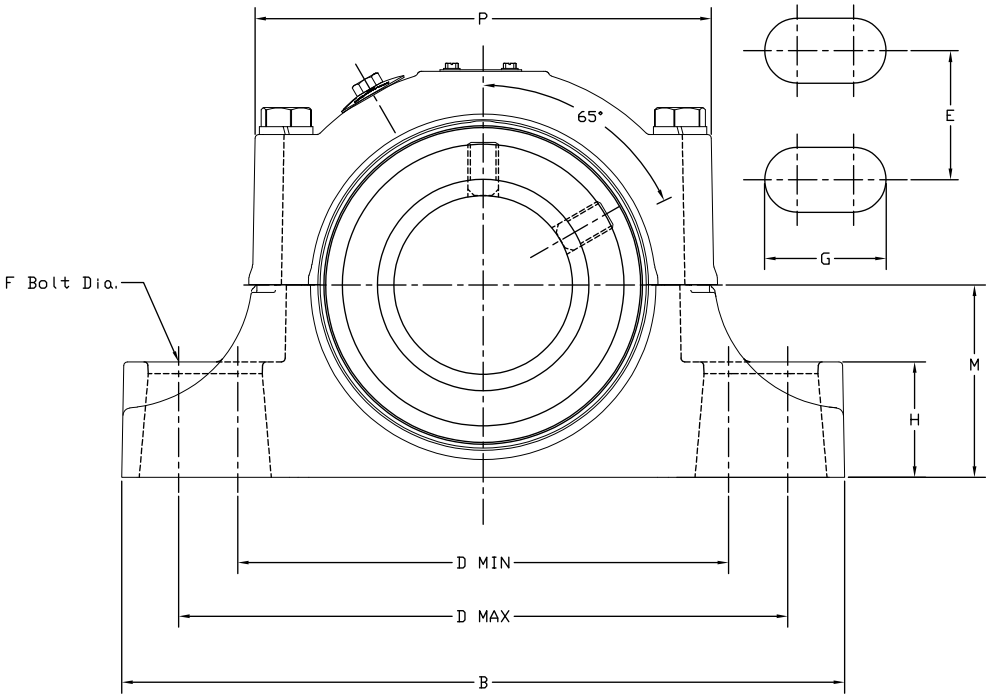

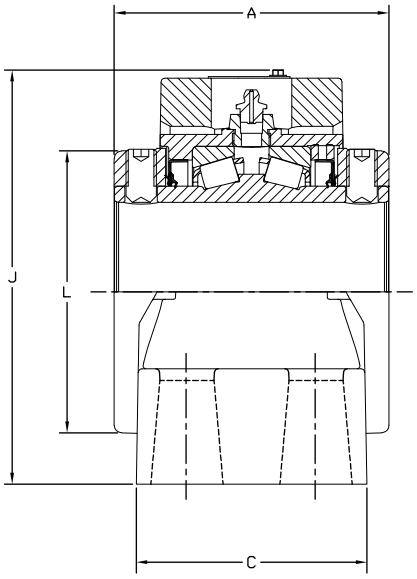

Type EXL pillow block – inch

4-bolt

Shaft size	Non-expansion part number	Description	Expansion part number	Description
2-1/4	077267	P4B-EXL-204R	077284	P4B-EXL-204RE
2-7/16	077268	P4B-EXL-207R	077285	P4B-EXL-207RE
2-1/2	077269	P4B-EXL-208R	077286	P4B-EXL-208RE
2-11/16	077270	P4B-EXL-211R	077287	P4B-EXL-211RE
2-3/4	077271	P4B-EXL-212R	077288	P4B-EXL-212RE
2-15/16	077272	P4B-EXL-215R	077289	P4B-EXL-215RE
3	077273	P4B-EXL-300R	077290	P4B-EXL-300RE
3-3/16	077274	P4B-EXL-303R	077291	P4B-EXL-303RE
3-1/4	077275	P4B-EXL-304R	077292	P4B-EXL-304RE
3-7/16	077276	P4B-EXL-307R	077293	P4B-EXL-307RE
3-1/2	077277	P4B-EXL-308R	077294	P4B-EXL-308RE
3-15/16	077278	P4B-EXL-315R	077295	P4B-EXL-315RE
4	077279	P4B-EXL-400R	077296	P4B-EXL-400RE
4-7/16	077280	P4B-EXL-407R	077297	P4B-EXL-407RE
4-1/2	077281	P4B-EXL-408R	077298	P4B-EXL-408RE
4-15/16	077282	P4B-EXL-415R	077299	P4B-EXL-415RE
5	077283	P4B-EXL-500R	077300	P4B-EXL-500RE

Shaft size	Approx. weight (lbs)	A	B	C	D		E	F bolt dia.	G	H	J	L	M	P	EXP*
					Min.	Max.									
2-1/4	29	4.00	10.38	3.50	7.75	8.25	1.88	5/8	1.25	1.63	6.08	4.06	2.75	6.41	0.56
2-7/16	29														
2-1/2	29														
2-11/16	42	4.50	11.75	3.75	8.75	10.00	2.12	5/8	1.38	1.88	6.77	4.72	3.13	7.50	0.56
2-3/4	42														
2-15/16	42														
3	42														
3-3/16	73	5.00	13.75	4.50	10.56	11.75	2.38	3/4	1.48	2.25	7.97	5.50	3.75	9.31	0.56
3-1/4	73														
3-7/16	73														
3-1/2	73														
3-15/16	109	6.25	15.25	4.74	11.00	13.00	2.25	3/4	1.88	2.44	8.81	6.00	4.25	10.08	0.56
4	109														
4-7/16	154	6.75	16.50	5.08	12.00	13.88	2.50	3/4	1.82	2.75	9.79	6.45	4.75	11.08	0.56
4-1/2	154														
4-15/16	192	7.25	18.50	5.66	13.50	15.88	2.88	3/4	2.23	3.00	11.36	7.25	5.50	12.71	0.56
5	192														

* EXP = Total expansion divided equally on both sides of bearing (expansion bearing only).

Type EXL flange – inch

4-bolt

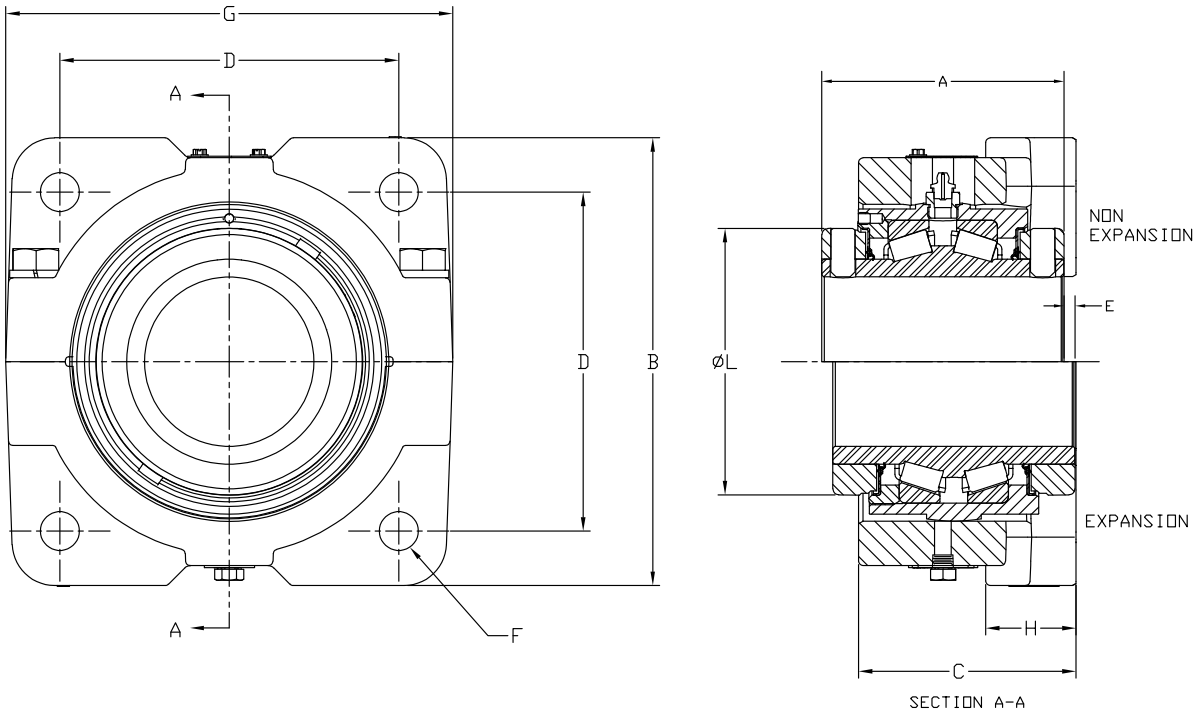

Shaft size	Non-expansion part number	Description	Expansion part number	Description
1-3/16	077301	F4B-EXL-103R	077326	F4B-EXL-103RE
1-1/4	077302	F4B-EXL-104R	077327	F4B-EXL-104RE
1-3/8	077303	F4B-EXL-106R	077328	F4B-EXL-106RE
1-7/16	077304	F4B-EXL-107R	077329	F4B-EXL-107RE
1-1/2	077305	F4B-EXL-108R	077330	F4B-EXL-108RE
1-5/8	077306	F4B-EXL-110R	077331	F4B-EXL-110RE
1-11/16	077307	F4B-EXL-111R	077332	F4B-EXL-111RE
1-3/4	077308	F4B-EXL-112R	077333	F4B-EXL-112RE
1-7/8	077309	F4B-EXL-114R	077334	F4B-EXL-114RE
1-15/16	077310	F4B-EXL-115R	077335	F4B-EXL-115RE
2	077311	F4B-EXL-200R	077336	F4B-EXL-200RE
2-3/16	077312	F4B-EXL-203R	077337	F4B-EXL-203RE
2-1/4	077313	F4B-EXL-204R	077338	F4B-EXL-204RE
2-7/16	077314	F4B-EXL-207R	077339	F4B-EXL-207RE
2-1/2	077315	F4B-EXL-208R	077340	F4B-EXL-208RE
2-11/16	077316	F4B-EXL-211R	077341	F4B-EXL-211RE
2-3/4	077317	F4B-EXL-212R	077342	F4B-EXL-212RE
2-15/16	077318	F4B-EXL-215R	077343	F4B-EXL-215RE
3	077319	F4B-EXL-300R	077344	F4B-EXL-300RE
3-3/16	077320	F4B-EXL-303R	077345	F4B-EXL-303RE
3-1/4	077321	F4B-EXL-304R	077346	F4B-EXL-304RE
3-7/16	077322	F4B-EXL-307R	077347	F4B-EXL-307RE
3-1/2	077323	F4B-EXL-308R	077348	F4B-EXL-308RE
3-15/16	077324	F4B-EXL-315R	077349	F4B-EXL-315RE
4	077325	F4B-EXL-400R	077350	F4B-EXL-400RE

Type EXL flange – inch

4-bolt

Bearing series	Shaft size	Approx. weight (lbs)	A	B	C	D	E	F bolt dia.	G	H	L	EXP*
103	1-3/16	6	2.75	4.00	2.31	2.88	0.06	3/8	3.98	1.00	2.25	0.20
104	1-1/4											
106	1-3/8	8	3.00	4.63	2.56	3.50	0.06	1/2	4.61	1.00	2.75	0.21
107	1-7/16											
108	1-1/2	13	3.38	5.38	2.93	4.13	0.12	1/2	5.36	1.19	3.19	0.20
110	1-5/8											
111	1-11/16											
112	1-3/4	15	3.50	5.63	3.06	4.38	0.13	1/2	5.60	1.19	3.44	0.20
114	1-7/8											
115	1-15/16											
200	2											
203	2-3/16	19	3.75	6.25	3.25	4.88	0.13	5/8	6.23	1.38	3.75	0.26
204	2-1/4	24	4.00	6.88	3.56	5.38	0.19	5/8	6.86	1.50	4.06	0.20
207	2-7/16											
208	2-1/2											
211	2-11/16	35	4.50	7.75	3.93	6.00	0.19	3/4	7.73	1.62	4.72	0.20
212	2-3/4											
215	2-15/16											
300	3											
303	3-3/16	61	5.00	9.25	4.50	7.00	0.25	3/4	9.22	1.87	5.50	0.35
304	3-1/4											
307	3-7/16											
308	3-1/2											
315	3-15/16	90	6.25	10.25	5.62	7.75	0.25	7/8	10.19	2.12	6.00	0.37
400	4											

* Total expansion (expansion bearings only).

TAF pillow block – inch

2-bolt

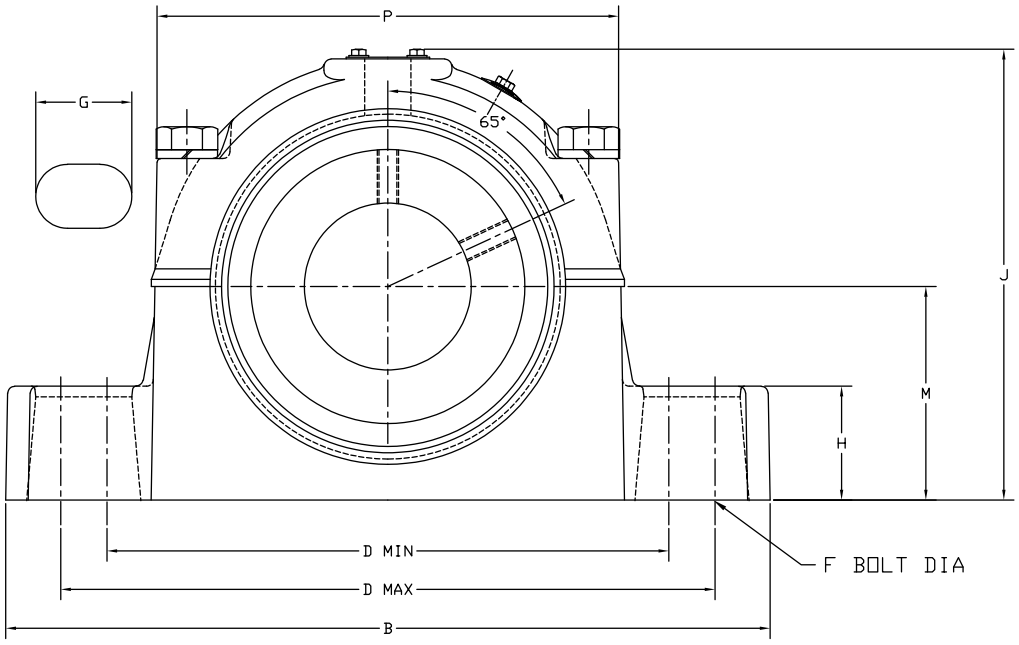

Note: All sizes use a 1/8 - 27 NPT hydraulic grease fitting

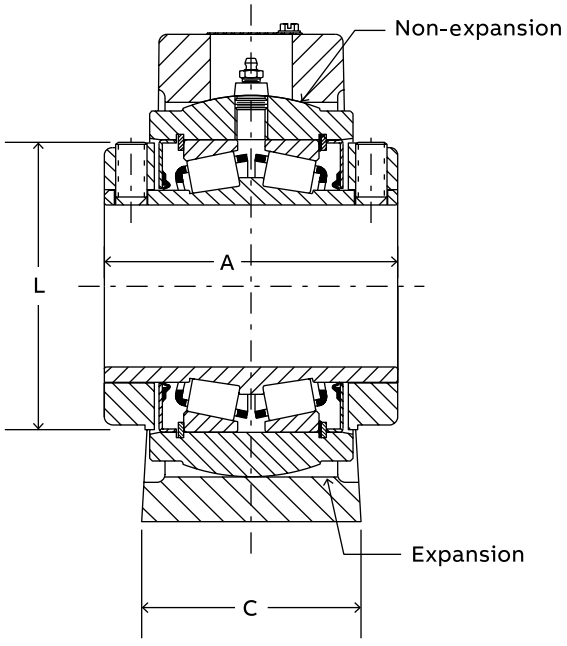

1-7/16" thru 3" Construction

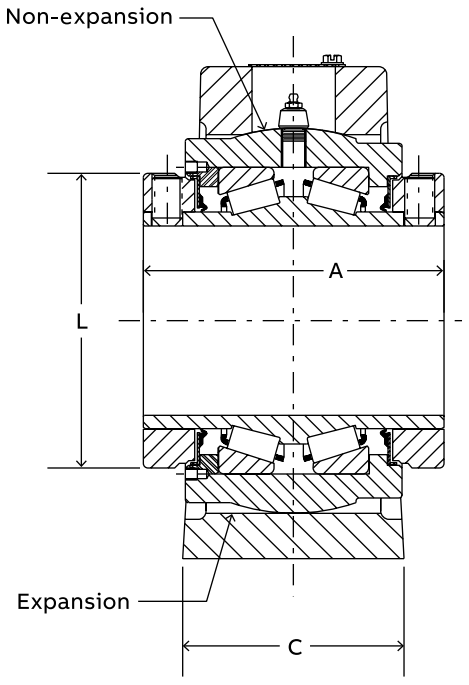

3-7/16" thru 3-1/2" Construction

TAF pillow block – inch

2-bolt

Standard – Non-expansion

Shaft size	Pillow block assy.	Description	Pillow block approx. weight (lbs)	Bearing inner unit
1-7/16	037580	P2B509-TAF-107R	12	037632
1-11/16	037581	P2B510-TAF-111R	15	037633
1-15/16	037582	P2B511-TAF-115R	17	037634
2-3/16	037583	P2B513-TAF-203R	25	037635
2-7/16	037584	P2B515-TAF-207R	30	037636
2-1/2	037585	P2B515-TAF-208R	30	037637
2-11/16	037586	P2B516-TAF-211R	38	037638
2-3/4	037587	P2B516-TAF-212R	38	037639
2-15/16	037588	P2B517-TAF-215R	45	037640
3	037589	P2B517-TAF-300R	44	037641
3-7/16	037590	P2B520-TAF-307R	71	037642
3-1/2	037591	P2B520-TAF-308R	70	037643

Non-expansion furnished unless otherwise specified.

Standard – Expansion

Shaft size	Pillow block assy.	Description	Pillow block approx. weight (lbs)	Bearing inner unit
1-7/16	037592	P2B509-TAF-107RE	12	037632
1-11/16	037593	P2B510-TAF-111RE	15	037633
1-15/16	037594	P2B511-TAF-115RE	17	037634
2-3/16	037595	P2B513-TAF-203RE	25	037635
2-7/16	037596	P2B515-TAF-207RE	30	037636
2-1/2	037597	P2B515-TAF-208RE	30	037637
2-11/16	037598	P2B516-TAF-211RE	38	037638
2-3/4	037599	P2B516-TAF-212RE	38	037639
2-15/16	037600	P2B517-TAF-215RE	45	037640
3	037601	P2B517-TAF-300RE	44	037641
3-7/16	037602	P2B520-TAF-307RE	71	037642
3-1/2	037603	P2B520-TAF-308RE	70	037643

Shaft size	SAF series	A	B	C	D		F bolt dia.	G	H	J	L	M	P	EXP*
					Min.	Max.								
1-7/16	509	3.00	8.25	2.19	6.25	7.00	1/2	0.94	0.88	5.11	2.75	2.25	5.52	3/32
1-11/16	510	3.38	8.25	2.38	6.50	7.00	1/2	0.88	1.03	5.63	3.19	2.50	5.81	3/32
1-15/16	511	3.50	9.63	2.75	7.38	8.25	5/8	1.20	1.03	6.14	3.44	2.75	6.36	9/32
2-3/16	513	3.75	11.00	3.25	8.66	9.50	5/8	1.44	1.03	6.52	3.75	3.00	6.95	9/32
2-7/16 2-1/2	515	4.00	11.13	3.13	8.63	9.63	5/8	1.27	1.25	7.03	4.06	3.25	7.38	9/32
2-11/16 2-3/4	516	4.50	12.59	3.50	9.88	11.00	3/4	1.44	1.00	7.67	4.72	3.50	8.31	9/32
2-15/16 3	517	4.50	12.59	3.50	9.88	11.00	3/4	1.44	1.25	7.92	4.72	3.75	8.31	9/32
3-7/16 3-1/2	520	5.00	15.38	4.34	11.81	13.13	7/8	1.66	1.66	9.42	5.50	4.50	10.09	9/32

* EXP – Total expansion divided equally on both sides of bearing (expansion bearings only).

Note: All sizes use a 1/8-27 NPT hydraulic grease fitting.

TAF pillow block – inch

4-bolt

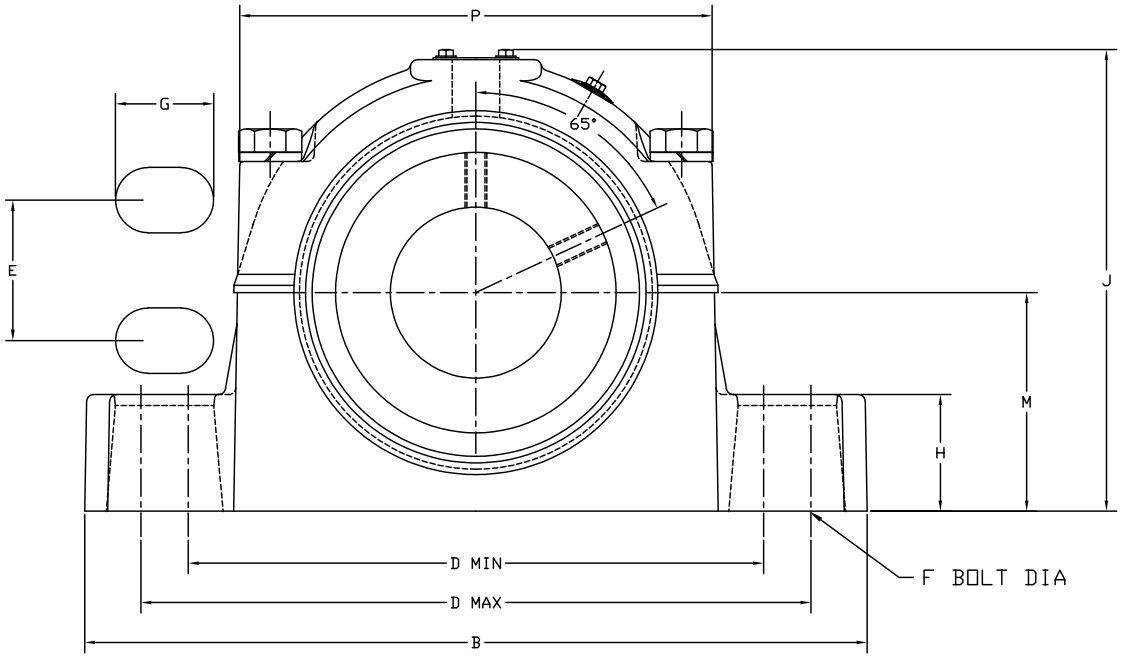

Note: All sizes use a 1/8 - 27 NPT hydraulic grease fitting

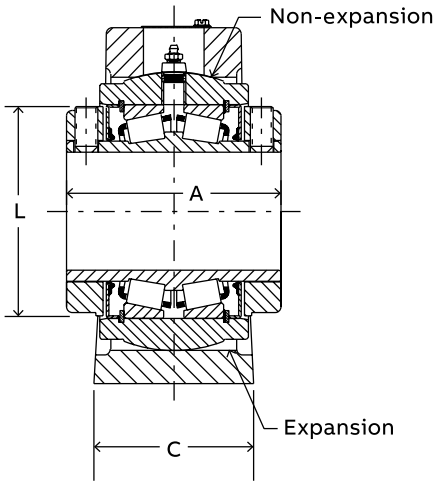

2-7/16" thru 3" Construction

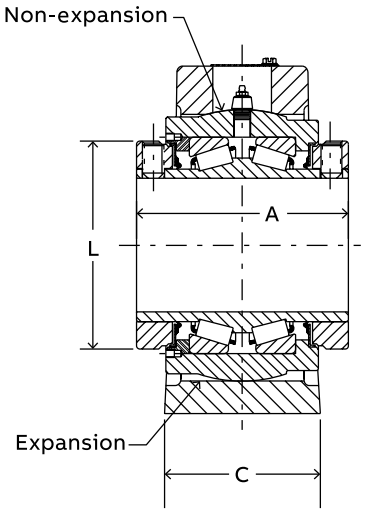

3-7/16" thru 5" Construction

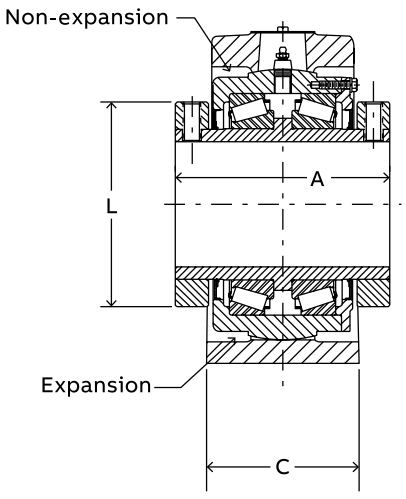

5-7/16" thru 7" Construction

TAF pillow block – inch

4-bolt

Gray iron – Non-expansion

Shaft size	Pillow block assy.	Description	Pillow block approx. weight (lbs)	Bearing inner unit
2-7/16	037604	P4B515-TAF-207R	30	037636
2-1/2	037605	P4B515-TAF-208R	30	037637
2-11/16	037606	P4B516-TAF-211R	38	037638
2-3/4	037607	P4B516-TAF-212R	38	037639
2-15/16	037608	P4B517-TAF-215R	45	037640
3	037609	P4B517-TAF-300R	44	037641
3-7/16	037610	P4B520-TAF-307R	71	037642
3-1/2	037611	P4B520-TAF-308R	70	037643
3-15/16	037612	P4B522-TAF-315R	110	037644
4	037613	P4B522-TAF-400R	110	037645
4-7/16	037614	P4B526-TAF-407R	140	037646
4-1/2	037615	P4B526-TAF-408R	140	037647
4-15/16	037616	P4B528-TAF-415R	180	037648
5	037617	P4B528-TAF-500R	180	037649
5-7/16	023584	P4B532-TAF-507R	300	023610
5-15/16	023585	P4B534-TAF-515R	300	023611
6	023586	P4B534-TAF-600R	300	023612
6-7/16	023587	P4B536-TAF-607R	510	023613
6-1/2	023588	P4B536-TAF-608R	510	023614
6-15/16	023589	P4B538-TAF-615R	487	023615
7	023590	P4B538-TAF-700R	470	023616

Non-expansion furnished unless otherwise specified.

Gray iron – Expansion

Shaft size	Pillow block assy.	Description	Pillow block approx. weight (lbs)	Bearing inner unit
2-7/16	037618	P4B515-TAF-207RE	30	037636
2-1/2	037619	P4B515-TAF-208RE	30	037637
2-11/16	037620	P4B516-TAF-211RE	38	037638
2-3/4	037621	P4B516-TAF-212RE	38	037639
2-15/16	037622	P4B517-TAF-215RE	45	037640
3	037623	P4B517-TAF-300RE	44	037641
3-7/16	037624	P4B520-TAF-307RE	71	037642
3-1/2	037625	P4B520-TAF-308RE	70	037643
3-15/16	037626	P4B522-TAF-315RE	110	037644
4	037627	P4B522-TAF-400RE	110	037645
4-7/16	037628	P4B526-TAF-407RE	140	037646
4-1/2	037629	P4B526-TAF-408RE	140	037647
4-15/16	037630	P4B528-TAF-415RE	180	037648
5	037631	P4B528-TAF-500RE	180	037649
5-7/16	023603 *	P4B532-TAF-507RE	300	023610
5-15/16	023604 *	P4B534-TAF-515RE	300	023611
6	023605 *	P4B534-TAF-600RE	300	023612
6-7/16	023606 *	P4B536-TAF-607RE	510	023613
6-1/2	023607 *	P4B536-TAF-608RE	510	023614
6-15/16	023608 *	P4B538-TAF-615RE	476	023615
7	023609 *	P4B538-TAF-700RE	468	023616

Shaft size	SAF series	A	B	C	D		E	F bolt dia.	G	H	J	L	M	P	EXP*
					Min.	Max.									
2-7/16 2-1/2	515	4.00	11.13	3.13	8.63	9.63	1.88	1/2	1.13	1.25	7.03	4.06	3.25	7.38	9/32
2-11/16 2-3/4	516	4.50	12.59	3.50	9.88	11.00	2.13	5/8	1.33	1.00	7.67	4.72	3.50	8.31	9/32
2-15/16 3	517	4.50	12.59	3.50	9.88	11.00	2.13	5/8	1.33	1.25	7.92	4.72	3.75	8.31	9/32
3-7/16 3-1/2	520	5.00	15.38	4.34	11.63	13.13	2.38	3/4	1.63	1.66	9.42	5.50	4.50	10.09	9/32
3-15/16 4	522	6.25	16.50	4.75	12.59	14.50	2.75	3/4	1.83	1.78	10.36	6.00	4.94	10.70	11/32
4-7/16 4-1/2	526	6.75	18.38	5.13	14.50	16.00	3.25	7/8	1.75	2.06	11.83	6.45	6.00	12.45	11/32
4-15/16 5	528	7.25	19.70	5.88	15.63	17.38	3.38	1	2.00	2.06	12.58	7.45	6.00	13.36	11/32
5-7/16	532	9.00	21.66	6.25	17.63	19.25	3.75	1	1.92	2.34	14.00	9.38	6.69	15.13	13/32
5-15/16 6	534	9.00	24.75	6.75	19.00	21.63	4.25	1	2.44	2.88	14.38	9.38	7.06	15.13	13/32
6-7/16 6-1/2	536	10.50	26.75	7.13	21.00	23.63	4.63	1	2.44	3.00	16.19	11.38	7.50	18.31	13/32
6-15/16 7	538	10.50	28.00	7.50	21.63	24.38	4.50	1-1/4	2.75	3.13	16.56	11.38	7.88	18.31	13/32

* EXP – Total expansion divided equally on both sides of bearing (expansion bearings only).

Note: All sizes use a 1/8-27 NPT hydraulic grease fitting.

TAF inner unit – inch

S1U cartridge

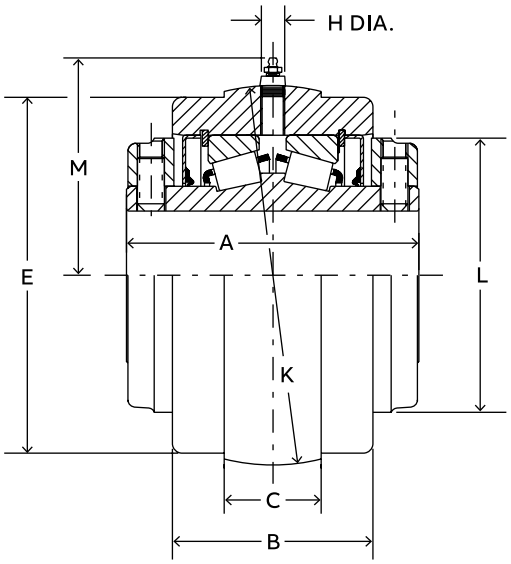

S-1 Unit
1-7/16" thru 3" Construction

Notes: All sizes use a 1/8 - 27 NPT hydraulic grease fitting
TAF S-1 Unit Is used in all Expansion and Non-Expansion TAF housings

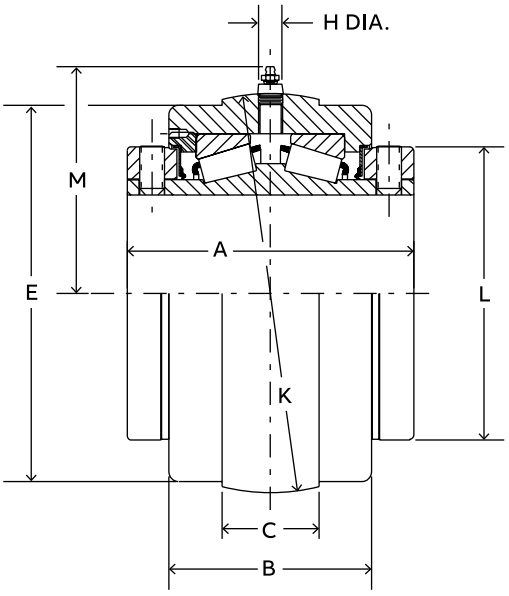

S-1 Unit
3-3/16" thru 5" Construction

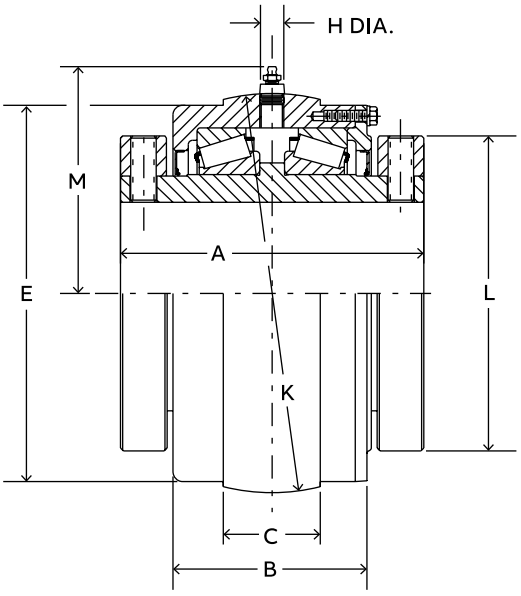

S-1 Unit
5-7/16" thru 7" Construction

TAF inner unit – inch

S1U cartridge

Gray iron

Shaft size	Part number	Part description	Approx. weight (lbs)
1-7/16	037632	S1U509-TAF-107	5
1-11/16	037633	S1U510-TAF-111	7
1-15/16	037634	S1U511-TAF-115	8
2-3/16	037635	S1U513-TAF-203	9
2-7/16	037636	S1U515-TAF-207	11
2- 1/2	037637	S1U515-TAF-208	11
2-11/16	037638	S1U516-TAF-211	18
2-3/4	037639	S1U516-TAF-212	17
2-15/16	037640	S1U517-TAF-215	17
3	037641	S1U517-TAF-300	17
3-7/16	037642	S1U520-TAF-307	31
3-1/2	037643	S1U520-TAF-307	31
3-15/16	037644	S1U522-TAF-315	43
4	037645	S1U522-TAF-400	43
4-7/16	037646	S1U526-TAF-407	57
4-1/2	037647	S1U526-TAF-408	68
4-15/16	037648	S1U528-TAF-415	82
5	037649	S1U528-TAF-500	82
5-7/16	023610	S1U532-TAF-507	155
5-15/16	023611	S1U534-TAF-515	143
6	023612	S1U534-TAF-600	138
6-7/16	023613	S1U536-TAF-607	187
6-1/2	023614	S1U536-TAF-608	182
6-15/16	023615	S1U538-TAF-615	180
7	023616	S1U538-TAF-700	178

Note: TAF inserts below 5-7/16" are not interchangeable with TAF-XT housings, with shafts of 5" or less, order Double Interlock S-1 units on Page B20-52.

Shaft size	A	B	C	E		H	K	L	M
				Mach side	Cast side				
1-7/16	3.00	2.06	1.16	3.25	3.31	0.75	3.595 •	2.75	2.50
1-11/16	3.38	2.31	1.19	3.75	3.81	0.75	4.095 •	3.19	2.88
1-15/16	3.50	2.44	1.50	4.13	4.18	0.75	4.502 •	3.44	2.75
2-3/16	3.75	2.56	1.56	4.50	4.56	0.75	4.940 •	3.75	2.95
2-7/16 2- 1/2	4.00	2.75	1.44	4.81	4.87	0.75	5.156 •	4.06	3.38
2-11/16 2-3/4	4.50	3.00	1.88	5.56	5.63	0.75	6.001	4.72	3.88
2-15/16 3	4.50	3.00	1.88	5.56	5.63	0.75	6.001 •	4.72	3.88
3-7/16 3-1/2	5.00	3.50	2.19	6.81	6.88	0.75	7.313 ✳	5.50	4.50
3-15/16 4	6.25	4.50	2.59	7.44	7.40	0.94	7.937 ✳	6.00	5.13
4-7/16 4-1/2	6.75	4.63	2.56	8.31	8.32	0.94	8.812 ✳	6.45	5.50
4-15/16 5	7.25	5.13	3.13	9.56	9.54	0.94	10.124 ✳	7.45	6.19
5-7/16 5-15/16 6	9.00	5.88	2.56	11.19	11.19	0.94	11.563 ^	9.38	6.91
6-7/16 6-1/2 6-15/16 7	10.50	7.13	3.00	13.25	13.25	0.94	13.748 ^	11.38	8.00

• +.000 to -.001" ^ +.000 to -.003" ✳ +.0005

Double Interlock pillow block – inch

2-bolt

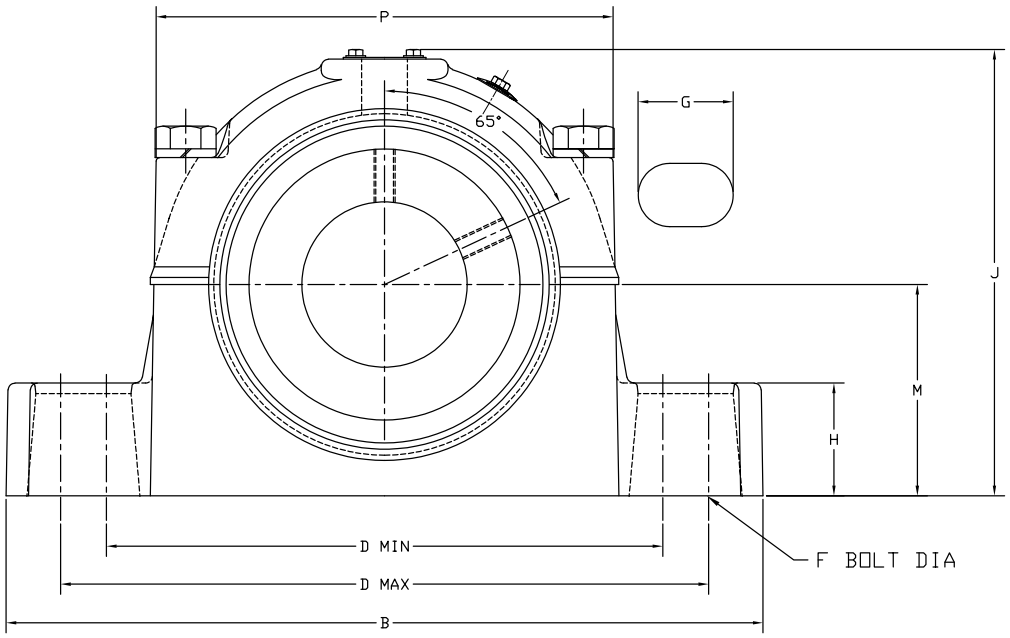

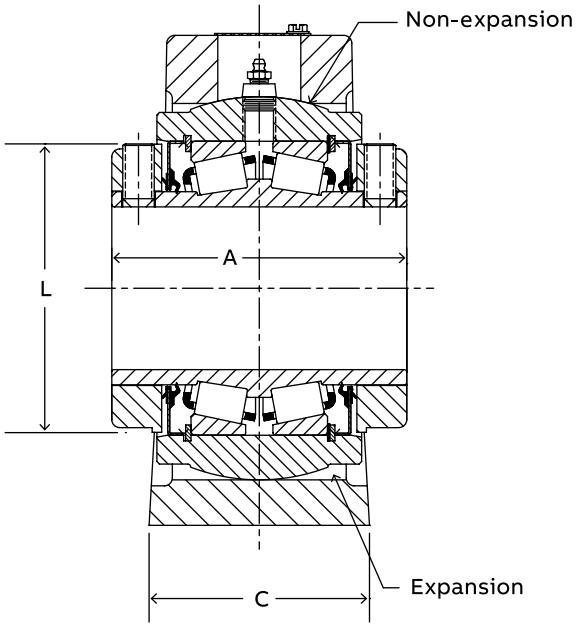

1-3/16” thru 3” Construction

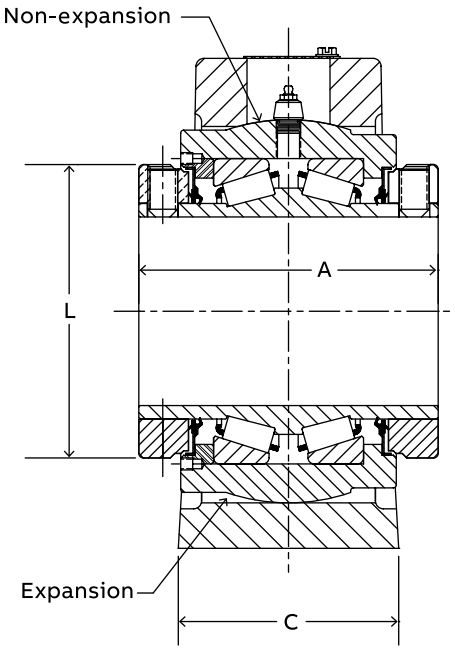

3-3/16” thru 3-1/2” Construction

Double Interlock pillow block – inch

2-bolt

Gray iron – Non-expansion

Shaft size	Pillow block assy.	Description	Pillow block Approx. weight (lbs)	Bearing inner units
1-1/4	023329	P2B-DI-104R	9	023508
1-3/8	023330	P2B-DI-106R	13	023509
1-7/16	023331	P2B-DI-107R	13	023510
1-1/2	023332	P2B-DI-108R	17	023511
1-5/8	023333	P2B-DI-110R	17	023512
1-11/16	023334	P2B-DI-111R	17	023513
1-3/4	023335	P2B-DI-112R	21	023514
1-15/16	023337	P2B-DI-115R	21	023516
2	023338	P2B-DI-200R	21	023517
2-3/16	023339	P2B-DI-203R	26	023518
2-1/4	023340	P2B-DI-204R	33	023519
2-7/16	023341	P2B-DI-207R	32	023520
2-1/2	023342	P2B-DI-208R	32	023521
2-11/16	023343	P2B-DI-211R	46	023522
2-3/4	023344	P2B-DI-212R	46	023523
2-15/16	023345	P2B-DI-215R	44	023524
3	023346	P2B-DI-300R	43	023525
3-3/16	023347	P2B-DI-303R	77	023526
3-7/16	023349	P2B-DI-307R	75	023528
3-1/2	023350	P2B-DI-308R	75	023529

Non-expansion furnished unless otherwise specified.

Gray iron – Expansion

Shaft size	Pillow block assy.	Description	Pillow block Approx. weight (lbs)	Bearing inner units
1-1/4	023376	P2B-DI-104RE	10	023508
1-3/8	023377	P2B-DI-106RE	13	023509
1-7/16	023378	P2B-DI-107RE	13	023510
1-1/2	023379	P2B-DI-108RE	17	023511
1-5/8	023380	P2B-DI-110RE	16	023512
1-11/16	023381	P2B-DI-111RE	16	023513
1-3/4	023382	P2B-DI-112RE	21	023514
1-15/16	023384	P2B-DI-115RE	21	023516
2	023385	P2B-DI-200RE	21	023517
2-3/16	023386	P2B-DI-203RE	25	023518
2-1/4	023387	P2B-DI-204RE	30	023519
2-7/16	023388	P2B-DI-207RE	32	023520
2-1/2	023389	P2B-DI-208RE	32	023521
2-11/16	023390	P2B-DI-211RE	45	023522
2-3/4	023391	P2B-DI-212RE	44	023523
2-15/16	023392	P2B-DI-215RE	43	023524
3	023393	P2B-DI-300RE	43	023525
3-3/16	023394	P2B-DI-303RE	75	023526
3-7/16	023396	P2B-DI-307RE	74	023528
3-1/2	023397	P2B-DI-308RE	73	023529

Shaft size	A	B	C	D		F bolt dia.	G	H	J	L	M	P	EXP*
				Min.	Max.								
1-1/4	2.75	7.50	1.88	6.00	6.38	3/8	0.67	1.00	4.53	2.25	2.13	5.00	3/32
1-3/8 1-7/16	3.00	8.00	2.19	6.25	6.63	1/2	0.75	1.25	5.23	2.75	2.38	5.52	3/32
1-1/2 1-5/8 1-11/16	3.38	9.00	2.38	6.88	7.63	1/2	1.00	1.38	5.75	3.19	2.63	5.81	3/32
1-3/4 1-15/16 2	3.50	10.00	2.53	7.38	8.44	5/8	1.30	1.50	6.27	3.44	2.88	6.36	9/32
2-3/16	3.75	11.00	2.66	8.06	9.25	5/8	1.33	1.50	6.52	3.75	3.00	6.97	9/32
2-1/4 2-7/16 2-1/2	4.00	12.00	2.81	9.27	10.25	5/8	1.27	1.75	7.03	4.06	3.25	7.38	9/32
2-11/16 2-3/4 2-15/16 3	4.50	13.44	2.94	9.88	11.50	3/4	1.69	2.00	7.92	4.72	3.75	8.31	9/32
3-3/16 3-7/16 3-1/2	5.00	16.00	3.44	12.81	13.81	7/8	1.50	2.25	9.42	5.50	4.50	10.09	9/32

* EXP – Total expansion divided equally on both sides of bearing (expansion bearings only).
Note: All sizes use a 1/8-27 NPT hydraulic grease fitting.

Double Interlock pillow block – inch

4-bolt

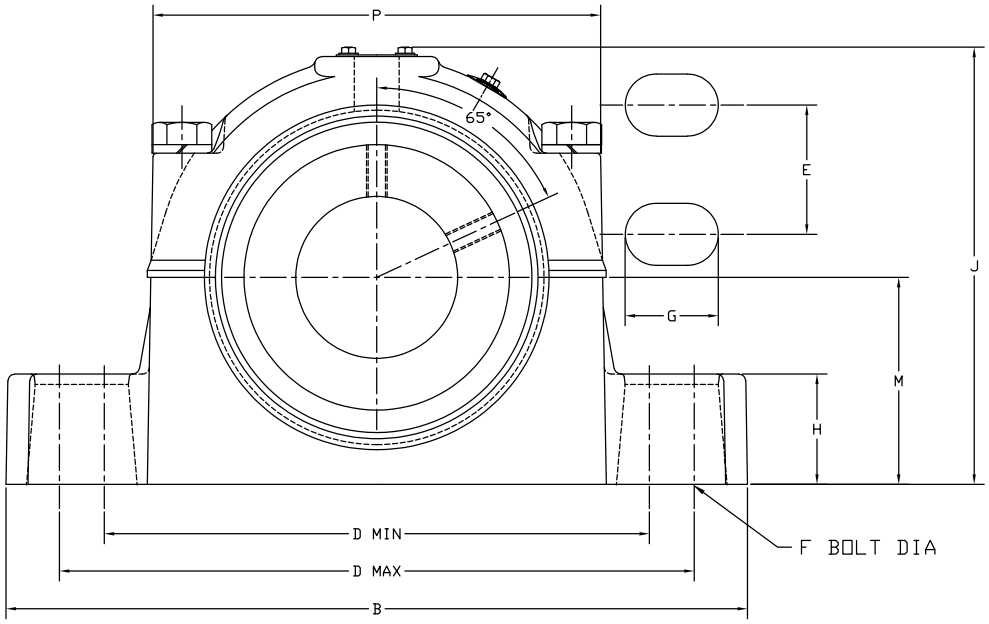

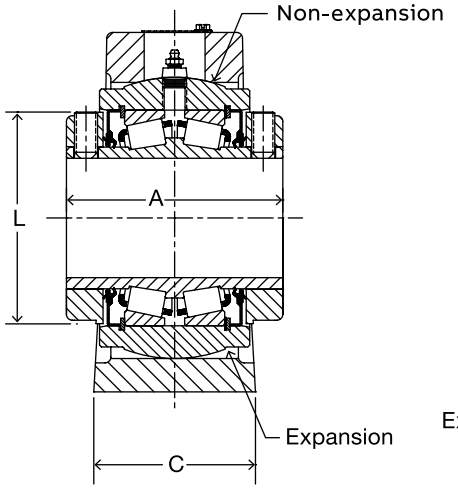

2-1/4" thru 3" Construction

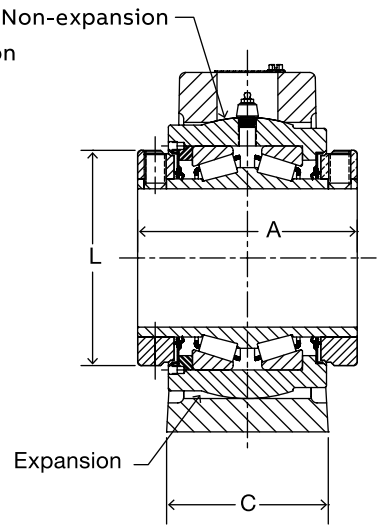

3-3/16" thru 5" Construction

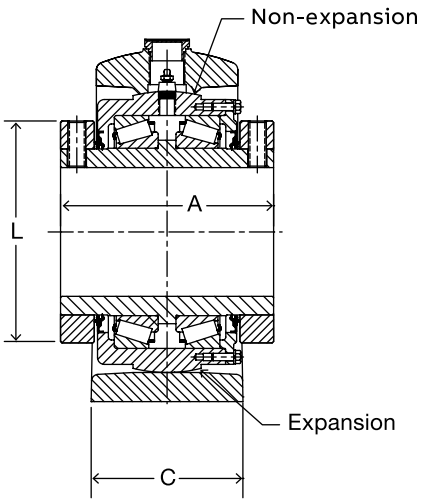

5-7/16" thru 7" Construction

Double Interlock pillow block – inch

4-bolt

Gray iron – Non-expansion

Shaft size	Pillow block assy.	Description	Pillow block Approx. weight (lbs)	Bearing inner unit
2-7/16	023352	P4B-DI-207R	33	023520
2-1/2	023353	P4B-DI-208R	32	023521
2-11/16	023354	P4B-DI-211R	47	023522
2-15/16	023356	P4B-DI-215R	46	023524
3	023357	P4B-DI-300R	45	023525
3-7/16	023360	P4B-DI-307R	79	023528
3-1/2	023361	P4B-DI-308R	78	023529
3-15/16	023362	P4B-DI-315R	118	023530
4	023363	P4B-DI-400R	118	023531
4-7/16	023364	P4B-DI-407R	154	023532
4-1/2	023365	P4B-DI-408R	135	023533
4-15/16	023366	P4B-DI-415R	200	023534
5	023367	P4B-DI-500R	200	023535
5-7/16	023368	P4B-DI-507R	329	023536
5-15/16	023369	P4B-DI-515R	314	023537

Non-expansion furnished unless otherwise specified.

Gray iron – Expansion

Shaft size	Pillow block assy.	Description	Pillow block Approx. weight (lbs)	Bearing inner unit
2-7/16	023399	P4B-DI-207RE	32	023520
2-1/2	023400	P4B-DI-208RE	32	023521
2-11/16	023401	P4B-DI-211RE	46	023522
2-15/16	023403	P4B-DI-215RE	45	023524
3	023404	P4B-DI-300RE	45	023525
3-7/16	023407	P4B-DI-307RE	72	023528
3-1/2	023408	P4B-DI-308RE	77	023529
3-15/16	023409	P4B-DI-315RE	116	023530
4	023410	P4B-DI-400RE	118	023531
4-7/16	023411	P4B-DI-407RE	152	023532
4-1/2	023412	P4B-DI-408RE	150	023533
4-15/16	023413	P4B-DI-415RE	198	023534
5	023414	P4B-DI-500RE	197	023535
5-7/16	023415	P4B-DI-507RE	311	023536
5-15/16	023416	P4B-DI-515RE	302	023537

Shaft size	A	B	C	D		E	F bolt dia.	G	H	J	L	M	P	EXP*
				Min.	Max.									
2-7/16 2-1/2	4.00	12.00	3.38	9.27	10.25	1.75	1/2	1.06	1.75	7.03	4.06	3.25	7.38	9/32
2-11/16 2-15/16 3	4.50	13.44	3.50	9.88	11.50	1.88	5/8	1.56	2.00	7.92	4.72	3.75	8.31	9/32
3-7/16 3-1/2	5.00	16.00	4.00	12.81	13.81	2.00	3/4	1.45	2.25	9.42	5.50	4.50	10.09	9/32
3-15/16 4	6.25	17.44	4.75	13.13	14.75	2.00	3/4	1.70	2.75	10.42	6.00	5.00	10.70	11/32
4-7/16 4-1/2	6.75	19.00	4.63	14.38	16.25	2.25	3/4	1.81	3.00	11.59	6.45	5.75	12.45	11/32
4-15/16 5	7.25	20.50	5.13	15.50	18.06	2.50	7/8	2.28	3.25	12.83	7.45	6.25	13.36	11/32
5-7/16 5-15/16	9.00	23.69	6.25	19.00	20.63	3.00	1	1.94	3.50	14.59	9.38	7.13	15.13	1/2

* EXP – Total expansion divided equally on both sides of bearing (expansion bearings only).

Note: All sizes use a 1/8-27 NPT hydraulic grease fitting.

Double Interlock flange – inch

4-bolt, square and round

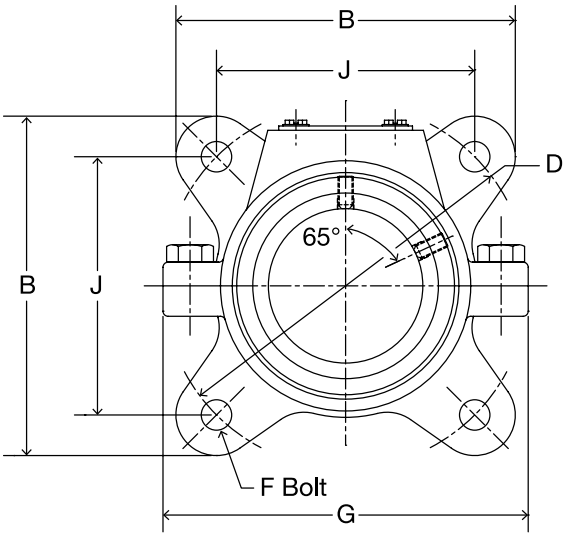

1-3/16” thru 4” External Construction

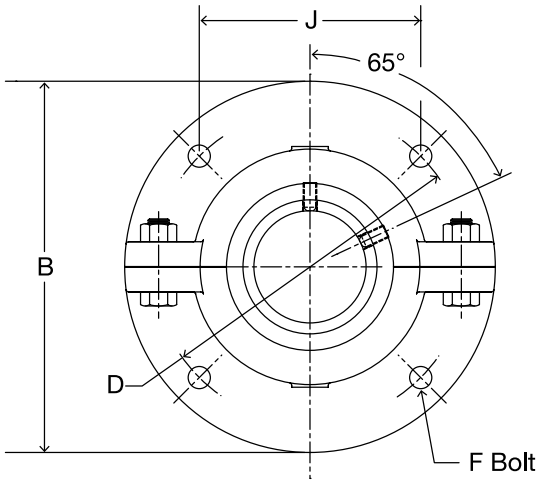

4-7/16” thru 5” External Construction

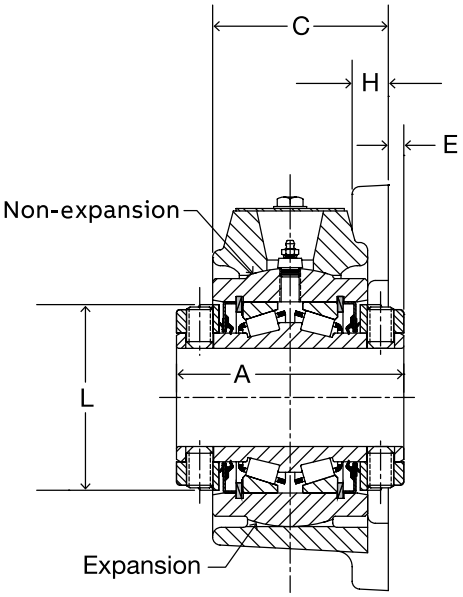

1-3/16” thru 3” Internal Construction

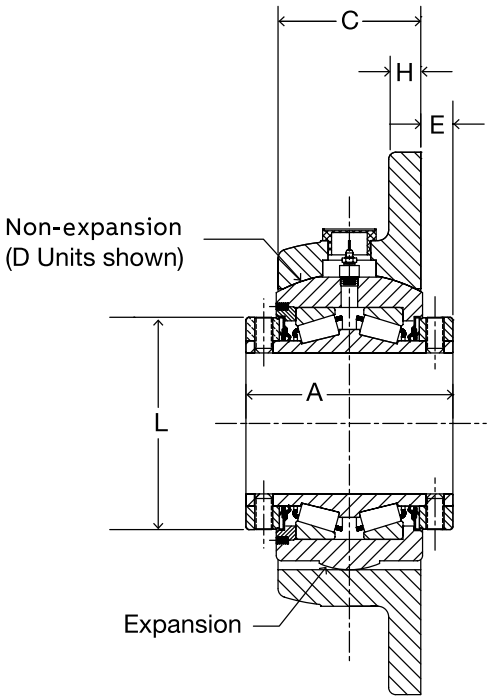

3-3/16” thru 5” Internal Construction

Double Interlock flange – inch

4-bolt, square and round

Ductile iron – Non-expansion

Shaft size	Part number	Description	Approx. weight (lbs)
1-3/16	023422	F4B-DI-103R	7
1-1/4	023423	F4B-DI-104R	7
1-3/8	023424	F4B-DI-106R	10
1-7/16	023425	F4B-DI-107R	9
1-1/2	023426	F4B-DI-108R	14
1-5/8	023427	F4B-DI-110R	14
1-11/16	023428	F4B-DI-111R	13
1-3/4	023429	F4B-DI-112R	16
1-7/8	023430	F4B-DI-114R	16
1-15/16	023431	F4B-DI-115R	16
2	023432	F4B-DI-200R	15
2-3/16	023433	F4B-DI-203R	19
2-1/4	023434	F4B-DI-204R	23
2-7/16	023435	F4B-DI-207R	22
2-1/2	023436	F4B-DI-208R	22
2-11/16	023437	F4B-DI-211R	34
2-3/4	023438	F4B-DI-212R	33
2-15/16	023439	F4B-DI-215R	31
3	023440	F4B-DI-300R	31
3-3/16	023441	F4B-DI-303R	54
3-1/4	023442	F4B-DI-304R	53
3-7/16	023443	F4B-DI-307R	52
3-1/2	023444	F4B-DI-308R	52
3-15/16	023445	F4B-DI-315R	82
4	023446	F4B-DI-400R	81
4-7/16 ◊	023447	F4B-DI-407R	158
4-1/2 ◊	023448	F4B-DI-408R	158
4-15/16 ◊	023449	F4B-DI-415R	257
5 ◊	023450	F4B-DI-500R	329

Non-expansion furnished unless otherwise specified.
◊ 4-7/16"— 5" Housings are made of cast iron.

Ductile iron – Expansion

Shaft size	Part number	Description	Approx. weight (lbs)
1-3/16	023451	F4B-DI-103RE	7
1-1/4	023452	F4B-DI-104RE	7
1-3/8	023453	F4B-DI-106RE	10
1-7/16	023454	F4B-DI-107RE	9
1-1/2	023455	F4B-DI-108RE	14
1-5/8	023456	F4B-DI-110RE	14
1-11/16	023457	F4B-DI-111RE	13
1-3/4	023458	F4B-DI-112RE	16
1-7/8	023459	F4B-DI-114RE	16
1-15/16	023460	F4B-DI-115RE	16
2	023461	F4B-DI-200RE	15
2-3/16	023462	F4B-DI-203RE	19
2-1/4	023463	F4B-DI-204RE	23
2-7/16	023464	F4B-DI-207RE	22
2-1/2	023465	F4B-DI-208RE	22
2-11/16	023466	F4B-DI-211RE	34
2-3/4	023467	F4B-DI-212RE	33
2-15/16	023468	F4B-DI-215RE	31
3	023469	F4B-DI-300RE	31
3-3/16	023470	F4B-DI-303RE	54
3-1/4	023471	F4B-DI-304RE	53
3-7/16	023472	F4B-DI-307RE	52
3-1/2	023473	F4B-DI-308RE	52
3-15/16	023474	F4B-DI-315RE	82
4	023475	F4B-DI-400RE	81
4-7/16 ◊	023476	F4B-DI-407RE	158
4-1/2 ◊	023477	F4B-DI-408RE	158
4-15/16 ◊	023478	F4B-DI-415RE	271
5	023479	F4B-DI-500RE	329

◊ 4-7/16"—5" Housings are made of cast iron.

Shaft size	A	B #	C #	D	E	F bolt dia.	G #	H #	J	L	EXP*
1-3/16 1-1/4	2.75	5.13	2.13	5.66	0.19	3/8	5.25	0.44	4.00	2.25	5/16
1-3/8 1-7/16	3.00	5.75	2.13	6.25	0.31	1/2	5.75	0.50	4.42	2.75	3/16
1-1/2 1-5/8 1-11/16	3.38	6.13	2.44	6.75	0.38	1/2	6.75	0.50	4.78	3.19	3/16
1-3/4 1-7/8 1-15/16 2	3.50	6.88	2.56	7.50	0.38	5/8	7.25	0.56	5.31	3.44	3/16
2-3/16	3.75	7.19	2.72	8.00	0.44	5/8	7.81	0.56	5.66	3.75	3/16
2-1/4 2-7/16 2-1/2	4.00	7.66	2.94	8.50	0.44	5/8	8.56	0.63	6.00	4.06	5/16
2-11/16 2-3/4 2-15/16 3	4.50	8.88	3.34	9.75	0.50	3/4	9.50	0.69	6.89	4.72	5/16
3-3/16 3-1/4 3-7/16 3-1/2	5.00	10.25	3.72	11.50	0.50	7/8	11.38	0.75	8.13	5.50	5/16
3-15/16 4	6.25	11.44	4.63	13.00	0.75	1	12.88	0.81	9.19	6.00	5/16
4-7/16 4-1/2	6.75	17.75	4.63	15.00	1.06	1	—	1.00	10.61	6.45	13/16
4-15/16 5	7.25	19.00	5.00	16.00	1.13	1-1/8	—	1.13	11.31	7.45	13/16

These are as cast surfaces. Dimensions may fluctuate due to draft angles and pattern shifts .
* EXP = Total expansion divided equally on both sides of bearing (expansion bearing only).
Note: All sizes use a 1/8-27 NPT hydraulic grease fitting.

Double Interlock inner unit – inch

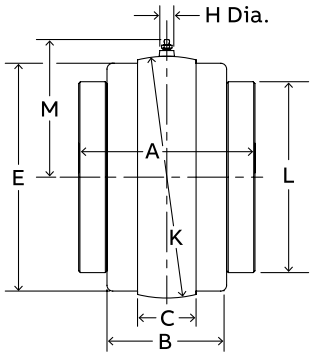

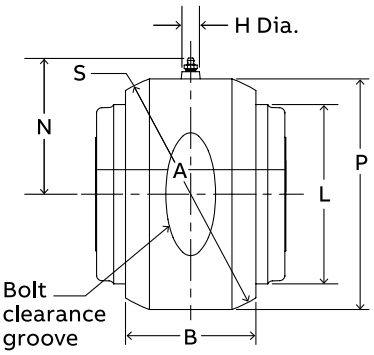

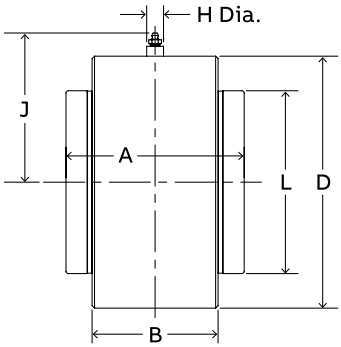

S-1 unit
Pillow block
S-1 units are used in expansion and non-expansion pillow block housings.

Flange
S-1 unit is used in expansion flange housings and non-expansion flange housings for 1-3/16—4".

D unit
FInge
D units are used in non-expansion flange housings 4-7/16—5" bore size.

Formerly used in Double Interlock non-expansion flange bearing and pillow blocks through 5 bore size prior to '78.

B-1 unit
B-1 units can only be used in a customer manufactured housing and are often mounted in machines where bored holes can be provided. B-1 units can be used either as non-expansion or expansion bearings by providing a suitable means of locating the unit axially. B-1 units will handle slight misalignment requirements. Shaft must be supported by another unit or bearing. For mounting in rotating wheels the Type C B-1 units is preferred or consult the factory.

Shaft size	A	B	C	♦D	E		H	J	K	L	M	N	P	S
					Mach side	Cast side								
1-3/16 1-1/4	2.75	1.88	1.03	3.000	2.81	2.28	**	2.42	3.125 •	2.25	2.03	—	—	—
1-3/8 1-7/16	3.00	2.06	1.16	3.438	3.25	3.31	11/16	2.54	3.625 •	2.75	2.64	2.88	3.63	3.844 •
1-1/2 1-5/8 1-11/16	3.38	2.31	1.19	3.938	3.75	3.81	11/16	2.79	4.125 •	3.19	2.89	3.13	4.09	4.344 •
1-3/4 1-7/8 1-15/16 2	3.50	2.44	1.50	4.250	4.13	4.19	11/16	2.95	4.562 •	3.44	3.10	3.25	4.44	4.656 •
2-3/16	3.75	2.56	1.56	4.625	4.50	4.63	11/16	3.13	5.000 •	3.75	3.32	3.44	4.72	5.000 •
2-1/4 2-7/16 2-1/2	4.00	2.75	1.44	5.000	4.81	4.88	11/16	3.32	5.186 •	4.06	3.41	3.58	5.16	5.437 •
2-11/16 2-3/4 2-15/16 3	4.50	3.00	1.88	5.875	5.56	5.63	11/16	3.76	6.061 •	4.72	3.85	4.00	5.81	6.094 •
3-3/16 3-1/4 3-7/16 3-1/2	5.00	3.50	2.00	7.125	6.81	6.88	11/16	4.38	7.373#	5.50	4.51	4.69	7.22	7.500 ^
3-15/16 4	6.25	4.50	2.38	7.875	7.44	7.50	*	5.48	7.997#	6.00	5.16	5.13	8.13	8.375 ^
4-7/16 4-1/2	6.75	4.63	2.38	8.750	8.31	8.38	*	5.91	8.872#	6.45	5.60	5.50	8.88	9.125 ^
4-15/16 5	7.25	5.13	2.88	10.125	9.56	9.63	*	6.6	10.184#	7.45	6.26	6.19	10.25	10.500 ^
5-7/16 5-15/16 6	9.00	6.06	2.88	—	11.19	11.19	15/16	—	11.874 ♦	9.38	7.10	—	—	—
6-7/16 6-1/2 6-15/16 7	10.50	7.13	3.00	—	13.25	13.25	15/16	—	14.248 ♦	11.38	8.29	—	—	—

* 11/16" Dia. on D units; 15/16" on S-1 units and 3/4 Hex on B-1 units.
** 11/16" Dia. on B-1 units; 7/16" Dia. on S-1 units.
• +.000 to -.001"
+/-.0005"
^ +.000 to -.002"
♦ +.000 to -.003"

Double Interlock inner unit – inch

S-1 units – Gray iron

Shaft size	Part number	Description	Approx. weight (lbs)
1-3/16	023507	S1U-DI-103R	3
1-1/4	023508	S1U-DI-104R	4
1-3/8	023509	S1U-DI-106R	5
1-7/16	023510	S1U-DI-107R	5
1-1/2	023511	S1U-DI-108R	7
1-5/8	023512	S1U-DI-110R	7
1-11/16	023513	S1U-DI-111R	7
1-3/4	023514	S1U-DI-112R	8
1-7/8	023515	S1U-DI-114R	8
1-15/16	023516	S1U-DI-115R	8
2	023517	S1U-DI-200R	8
2-3/16	023518	S1U-DI-203R	10
2-1/4	023519	S1U-DI-204R	12
2-7/16	023520	S1U-DI-207R	11
2-1/2	023521	S1U-DI-208R	11
2-11/16	023522	S1U-DI-211R	18
2-3/4	023523	S1U-DI-212R	17
2-15/16	023524	S1U-DI-215R	17
3	023525	S1U-DI-300R	17

S-1 units – Gray iron

Shaft size	Part number	Description	Approx. weight (lbs)
3-3/16	023526	S1U-DI-303R	34
3-1/4	023527	S1U-DI-304R	31
3-7/16	023528	S1U-DI-307R	31
3-1/2	023529	S1U-DI-308R	31
3-15/16	023530	S1U-DI-315R	43
4	023531	S1U-DI-400R	43
4-7/16	023532	S1U-DI-407R	57
4-1/2	023533	S1U-DI-408R	64
4-15/16	023534	S1U-DI-415R	82
5	023535	S1U-DI-500R	82
5-7/16	023536	S1U-DI-507R	159
5-15/16	023537	S1U-DI-515R	135
6	023538	S1U-DI-600R	128
6-7/16	023539	S1U-DI-607R	187
6-1/2	023540	S1U-DI-608R	182
6-15/16	023541	S1U-DI-615R	180
7	023542	S1U-DI-700R	178

D units – Gray iron

Shaft size	Part number	Description	Approx. weight (lbs)
1-3/16	—	DU-DI-103R	—
1-1/4	—	DU-DI-104R	—
1-3/8	023480	DU-DI-106R	5
1-7/16	023481	DU-DI-107R	5
1-1/2	023482	DU-DI-108R	8
1-5/8	023483	DU-DI-110R	7
1-11/16	023484	DU-DI-111R	7
1-3/4	023485	DU-DI-112R	8
1-7/8	023486	DU-DI-114R	8
1-15/16	023487	DU-DI-115R	8
2	023488	DU-DI-200R	8
2-3/16	023489	DU-DI-203R	9
2-1/4	023490	DU-DI-204R	12
2-7/16	023491	DU-DI-207R	12
2-1/2	023492	DU-DI-208R	12
2-11/16	023493	DU-DI-211R	18
2-3/4	023494	DU-DI-212R	17
2-15/16	023495	DU-DI-215R	16
3	023496	DU-DI-300R	16
3-3/16	023497	DU-DI-303R	32
3-1/4	023498	DU-DI-304R	31
3-7/16	023499	DU-DI-307R	30
3-1/2	023500	DU-DI-308R	29
3-15/16	023501	DU-DI-315R	46
4	023502	DU-DI-400R	43
4-7/16	023503	DU-DI-407R	57
4 1/2	023504	DU-DI-408R	64
4-15/16	023505	DU-DI-415R	85
5	023506	DU-DI-500R	85

B-1 units – Gray iron

Shaft size	Part number	Description	Approx. weight (lbs)
1-3/16	023543	BIU-DI-103R	3
1-3/8	023545	BIU-DI-106R	5
1-7/16	023546	BIU-DI-107R	5
1-1/2	023547	BIU-DI-108R	6
1-5/8	023548	BIU-DI-110R	6
1-3/4	023550	BIU-DI-112R	8
1-15/16	023552	BIU-DI-115R	8
2	023553	BIU-DI-200R	7
2-3/16	023554	BIU-DI-203R	9
2-7/16	023556	BIU-DI-207R	12
2-1/2	023557	BIU-DI-208R	11
2-11/16	023558	BIU-DI-211R	17
2-3/4	023559	BIU-DI-212R	17
2-15/16	023560	BIU-DI-215R	17
3	023561	BIU-DI-300R	17
3-7/16	023564	BIU-DI-307R	30
3-1/2	023565	BIU-DI-308R	30
3-15/16	023566	BIU-DI-315R	45
4	023567	BIU-DI-400R	44
4-7/16	023568	BIU-DI-407R	58
4 1/2	023569	BIU-DI-408R	64
4-15/16	023570	BIU-DI-415R	87
5	023571	BIU-DI-500R	86

Note: All sizes use a 1/8-27 NPT hydraulic grease fitting.

Type K pillow block – inch

2- and 4-bolt

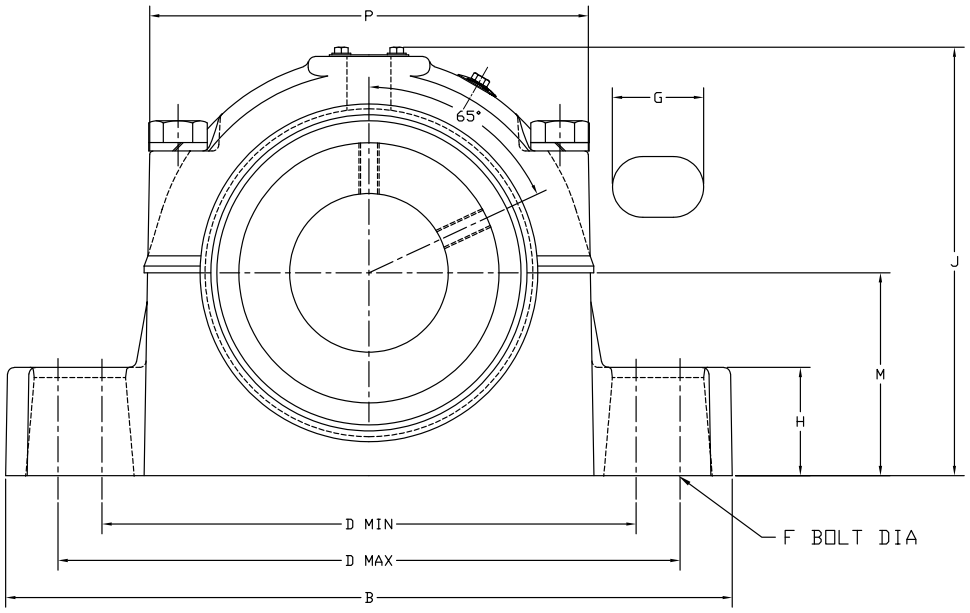

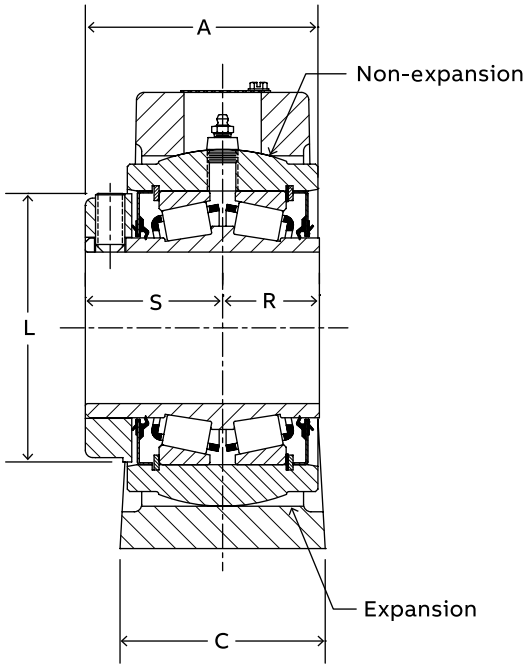

1-3/16” thru 3” Construction

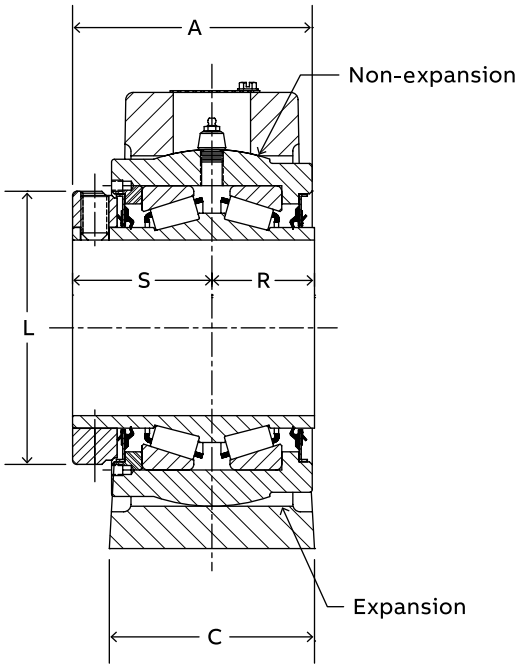

3-3/16” thru 3-15/16” Construction

1-13/16” thru 3-1/2“ (2 Bolt base)
3-15/16” (4 Bolt base)

Type K pillow block – inch

2- and 4-bolt

Gray iron – Non-expansion

Shaft size	Part number	Description	Approx. weight (lbs)
1-3/16	023167	P2B-K-103R	9
1-1/4	023168	P2B-K-104R	9
1-7/16	023170	P2B-K-107R	11
1-1/2	023171	P2B-K-108R	15
1-5/8	023172	P2B-K-110R	14
1-11/16	023173	P2B-K-111R	14
1-3/4	023174	P2B-K-112R	20
1-15/16	023175	P2B-K-115R	19
2	023176	P2B-K-200R	19
2-3/16	023177	P2B-K-203R	24
2-1/4	023178	P2B-K-204R	28
2-7/16	023179	P2B-K-207R	28
2-1/2	023180	P2B-K-208R	28
2-11/16	023181	P2B-K-211R	40
2-3/4	023182	P2B-K-212R	40
2-15/16	023183	P2B-K-215R	39
3	023184	P2B-K-300R	39
3-7/16	023186	P2B-K-307R	67
3-1/2	023187	P2B-K-308R	66
3-15/16 ▲	023188	P4B-K-315R	106

Non-expansion provided unless otherwise specified.

Gray iron – Expansion

Shaft size	Part number	Description	Approx. weight (lbs)
1-3/16	023167	P2B-K-103R	9
1-1/4	023168	P2B-K-104R	9
1-7/16	023170	P2B-K-107R	11
1-1/2	023171	P2B-K-108R	15
1-5/8	023172	P2B-K-110R	14
1-11/16	023173	P2B-K-111R	14
1-3/4	023174	P2B-K-112R	20
1-15/16	023175	P2B-K-115R	19
2	023176	P2B-K-200R	19
2-3/16	023177	P2B-K-203R	24
2-1/4	023178	P2B-K-204R	28
2-7/16	023179	P2B-K-207R	28
2-1/2	023180	P2B-K-208R	28
2-11/16	023181	P2B-K-211R	40
2-3/4	023182	P2B-K-212R	40
2-15/16	023183	P2B-K-215R	39
3	023184	P2B-K-300R	39
3-7/16	023186	P2B-K-307R	67
3-1/2	023187	P2B-K-308R	66
3-15/16 ▲	023188	P4B-K-315R	106

Shaft size	A	B	C	D		F bolt dia.	G	H	J	L	M	P	R	S	EXP*
				Min.	Max.										
1-3/16 1-1/4	2.28	7.50	1.88	6.00	6.38	3/8	0.69	1.00	4.53	2.25	2.13	5.00	1.00	1.38	3/32
1-3/8 1-7/16	2.55	8.00	2.19	6.25	6.63	1/2	0.75	1.25	5.23	2.75	2.38	5.52	1.03	1.50	3/32
1-1/2 1-5/8 1-11/16	2.83	9.00	2.38	6.88	7.63	1/2	1.00	1.38	5.75	3.19	2.63	5.81	1.56	1.69	3/32
1-3/4 1-15/16 2	2.95	10.00	2.53	7.38	8.44	5/8	1.30	1.50	6.27	3.44	2.88	6.36	1.20	1.75	9/32
2-3/16	3.16	11.00	2.66	8.06	9.25	5/8	1.33	1.50	6.52	3.75	3.00	6.95	1.25	1.88	9/32
2-1/4 2-7/16 2-1/2	3.34	12.00	2.81	9.25	10.25	5/8	1.27	1.75	7.03	4.06	3.25	7.38	1.31	2.00	9/32
2-11/16 2-3/4 2-15/16 3	3.78	13.44	2.94	9.88	11.50	3/4	1.69	2.00	7.92	4.72	3.75	8.31	1.44	2.25	9/32
3-3/16 3-7/16 3-1/2	4.27	16.00	3.44	12.81	13.81	7/8	1.50	2.25	9.42	5.50	4.50	10.09	1.69	2.50	9/32
3-15/16▲	5.41	17.44	4.75	13.13	14.75	3/4	1.70	2.75	10.42	6.00	5.00	10.70	2.13	3.13	11/32

* EXP = Total expansion divided equally on both sides of bearing (expansion bearings only).

▲ 4-bolt (see P4B-DI-315R on page B20-50-51 for bolt spacing).

Note: All sizes use a 1/8-27 NPT hydraulic grease fitting.

Type K flange – inch

4-bolt

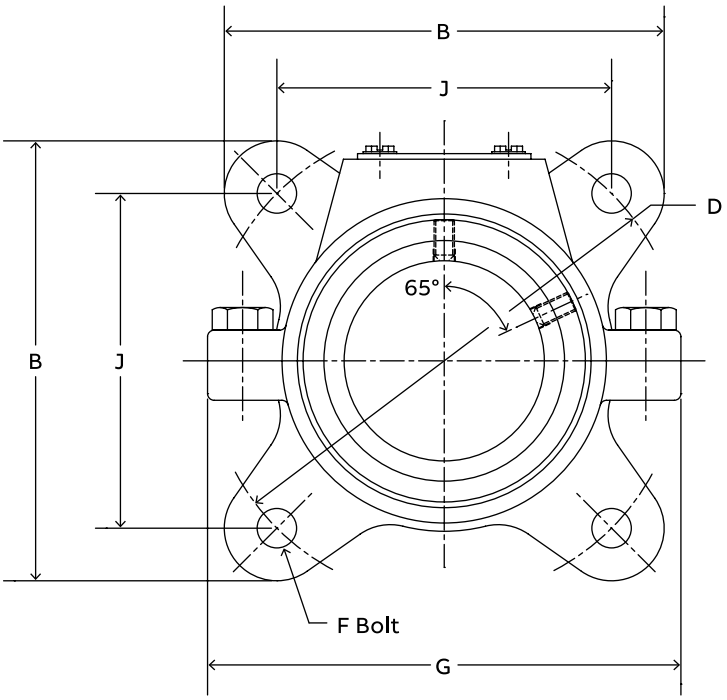

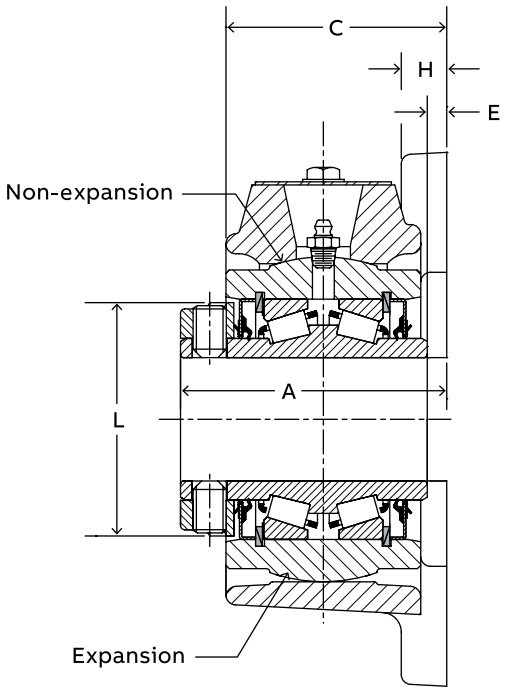

1-3/16” thru 3” Internal Construction

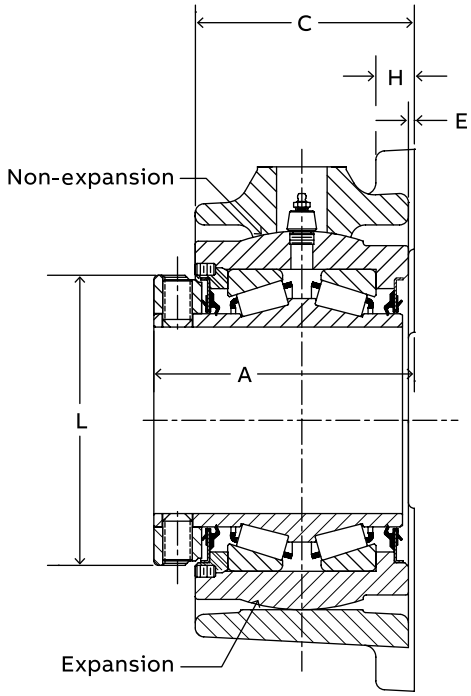

3-3/16” thru 3-15/16” Internal Construction

Type K flange – inch

4-bolt

Ductile iron – Non-expansion

Shaft size	Part number	Description	Approx. weight (lbs)
1-3/16	023211	F4B-K-103R	6
1-1/4	023212	F4B-K-104R	6
1-3/8	023213	F4B-K-106R	7
1-7/16	023214	F4B-K-107R	8
1-1/2	023215	F4B-K-108R	12
1-5/8	023216	F4B-K-110R	12
1-11/16	023217	F4B-K-111R	12
1-3/4	023218	F4B-K-112R	13
1-15/16	023219	F4B-K-115R	15
2	023220	F4B-K-200R	14
2-3/16	023221	F4B-K-203R	17
2-1/4	023222	F4B-K-204R	17
2-7/16	023223	F4B-K-207R	20
2-1/2	023224	F4B-K-208R	20
2-11/16	023225	F4B-K-211R	24
2-3/4	023226	F4B-K-212R	24
2-15/16	023227	F4B-K-215R	29
3	023228	F4B-K-300R	29
3-3/16	023229	F4B-K-303R	45
3-7/16	023230	F4B-K-307R	47
3-1/2	023231	F4B-K-308R	45
3-15/16	023232	F4B-K-315R	73

Non-expansion provided unless otherwise specified.

Ductile iron – Expansion

Shaft size	Part number	Description	Approx. weight (lbs)
1-3/16	023233	F4B-K-103RE	6
1-1/4	023234	F4B-K-104RE	6
1-3/8	023235	F4B-K-106RE	7
1-7/16	023236	F4B-K-107RE	8
1-1/2	023237	F4B-K-108RE	12
1-5/8	023238	F4B-K-110RE	12
1-11/16	023239	F4B-K-111RE	12
1-3/4	023240	F4B-K-112RE	13
1-15/16	023241	F4B-K-115RE	15
2	023242	F4B-K-200RE	14
2-3/16	023243	F4B-K-203RE	17
2-1/4	023244	F4B-K-204RE	17
2-7/16	023245	F4B-K-207RE	20
2-1/2	023246	F4B-K-208RE	20
2-11/16	023247	F4B-K-211RE	24
2-3/4	023248	F4B-K-212RE	24
2-15/16	023249	F4B-K-215RE	29
3	023250	F4B-K-300RE	29
3-3/16	023251	F4B-K-303RE	45
3-7/16	023252	F4B-K-307RE	47
3-1/2	023253	F4B-K-308RE	45
3-15/16	023254	F4B-K-315RE	73

Shaft size	A	B #	C #	D	E	F bolt dia.	G #	H #	J	L	EXP *
1-3/16 1-1/4	2.56	5.19	2.13	5.66	0.19	3/8	5.25	0.44	4.00	2.25	9/32
1-3/8 1-7/16	2.69	5.75	2.13	6.25	0.16	1/2	5.75	0.50	4.41	2.75	3/16
1-1/2 1-5/8 1-11/16	3.00	6.13	2.44	6.75	0.16	1/2	6.75	0.50	4.78	3.19	3/16
1-3/4 1-15/16 2	3.13	6.88	2.56	7.50	0.16	5/8	7.25	0.56	5.31	3.44	3/16
2-3/16	3.31	7.19	2.72	8.00	0.16	5/8	7.81	0.56	5.66	3.75	3/16
2-1/4 2-7/16 2-1/2	3.56	7.63	2.92	8.50	0.25	5/8	8.56	0.63	6.00	4.06	5/16
2-11/16 2-3/4 2-15/16 3	4.00	8.88	3.34	9.75	0.25	3/4	9.50	0.69	6.91	4.72	5/16
3-3/16 3-7/16 3-1/2	4.50	10.25	3.72	11.50	0.25	7/8	11.38	0.75	8.13	5.50	5/16
3-15/16	5.50	11.44	4.63	13.00	0.13	1	12.88	0.81	9.19	6.00	5/16

These are as cast surfaces. Dimensions may fluctuate due to draft angles and pattern shifts.

* EXP = Total expansion divided equally on both sides of bearing (expansion bearing only).

Note: All sizes use a 1/8-27 NPT hydraulic grease fitting.

Type K inner unit – inch

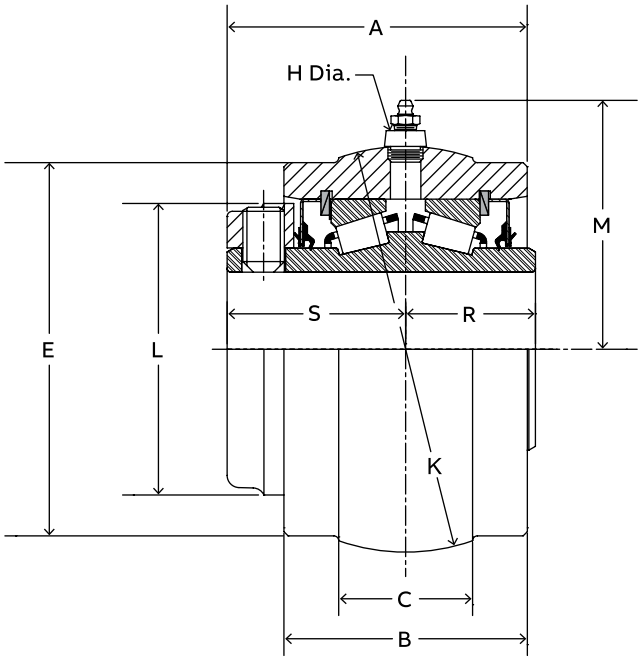

S-1 Unit
1-3/16” thru 3” Construction

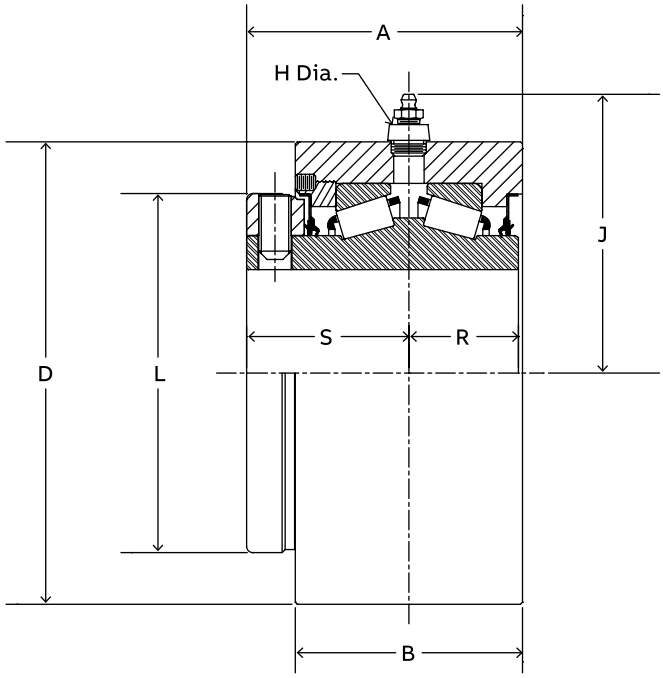

B-1 Unit
3-3/16” thru 3-15/16” Construction

Type K inner unit – inch

Shaft size	Part number	Description	Approx. weight (lbs)
1-3/16	023271	S1U-K-103R	3
1-1/4	023272	S1U-K-104R	3
1-3/8	023273	S1U-K-106R	4
1-7/16	023274	S1U-K-107R	4
1-1/2	023275	S1U-K-108R	5
1-5/8	023276	S1U-K-110R	5
1-11/16	023277	S1U-K-111R	5
1-3/4	023278	S1U-K-112R	7
1-15/16	023279	S1U-K-115R	7
2	023280	S1U-K-200R	7
2-3/16	023281	S1U-K-203R	9
2-1/4	023282	S1U-K-204R	11
2-7/16	023283	S1U-K-207R	11
2-1/2	023284	S1U-K-208R	11
2-11/16	023285	S1U-K-211R	15
2-3/4	023286	S1U-K-212R	15
2-15/16	023287	S1U-K-215R	15
3	023288	S1U-K-300R	15
3-3/16	023289	S1U-K-303R	28
3-7/16	023290	S1U-K-307R	28
3-1/2	023291	S1U-K-308R	28
3-15/16	023292	S1U-K-315R	40

Shaft size	Part number	Description	Approx. weight (lbs)
1-3/16	—	B1U-K-103R	3
1-1/4	—	B1U-K-104R	3
1-3/8	023293	B1U-K-106R	4
1-7/16	023294	B1U-K-107R	4
1-1/2	023295	B1U-K-108R	5
1-5/8	023296	B1U-K-110R	5
1-11/16	023297	B1U-K-111R	5
1-3/4	023298	B1U-K-112R	7
1-15/16	023299	B1U-K-115R	7
2	023300	B1U-K-200R	7
2-3/16	023301	B1U-K-203R	9
2-1/4	023302	B1U-K-204R	11
2-7/16	023303	B1U-K-207R	11
2-1/2	023304	B1U-K-208R	11
2-11/16	023305	B1U-K-211R	15
2-3/4	023306	B1U-K-212R	15
2-15/16	023307	B1U-K-215R	15
3	023308	B1U-K-300R	15
3-3/16	023309	B1U-K-303R	28
3-7/16	023310	B1U-K-307R	28
3-1/2	023311	B1U-K-308R	28
3-15/16	023312	B1U-K-315R	40

Shaft size	A	B	C	D	E ***		H	J	K **	L	M	R	S
					Machine side	Cast side							
1-3/16 1-1/4	2.31	1.88	1.03	—	2.81	3.13	0.44	—	3.125	2.25	2.03	1.00	1.38
1-3/8 1-7/16	2.53	2.06	1.16	3.438	3.25	3.31	0.69	2.63	3.625	2.75	2.63	1.03	1.50
1-1/2 1-5/8 1-11/16	2.84	2.31	1.19	3.948	3.75	3.81	0.69	2.88	4.125	3.19	2.81	1.16	1.69
1-3/4 1-15/16 2	2.97	2.44	1.50	4.250	4.13	4.19	0.69	3.00	4.562	3.44	3.06	1.20	1.75
2-3/16	3.16	2.56	1.56	4.625	4.50	4.56	0.69	3.25	5.000	3.75	3.25	1.25	1.88
2-1/4 2-7/16 2-1/2	3.38	2.75	1.44	5.000	4.81	4.88	0.69	3.44	5.186	4.06	3.38	1.31	2.00
2-11/16 2-3/4 2-15/16 3	3.75	3.00	1.88	5.875	5.56	5.63	0.69	3.88	6.061	4.72	3.81	1.44	2.25
3-3/16 3-7/16 3-1/2	4.25	3.50	2.00	7.125	6.81	6.88	0.69	4.50	7.373	5.50	4.50	1.69	2.50
3-15/16	5.38	4.50	2.38	7.875	7.44	7.50	0.94	5.50	7.997	6.00	5.16	2.13	3.13

* +.000 -.002”

** +.000 -.001 sizes 1-3/16 through 3”, +/-.0005, sizes 3-3/16 through 3-15/16”

*** Machined side of unit is on collar side only.

Note: All sizes use a 1/8-27 NPT hydraulic grease fitting

Type K take-up – inch

Wide-slot (WS)

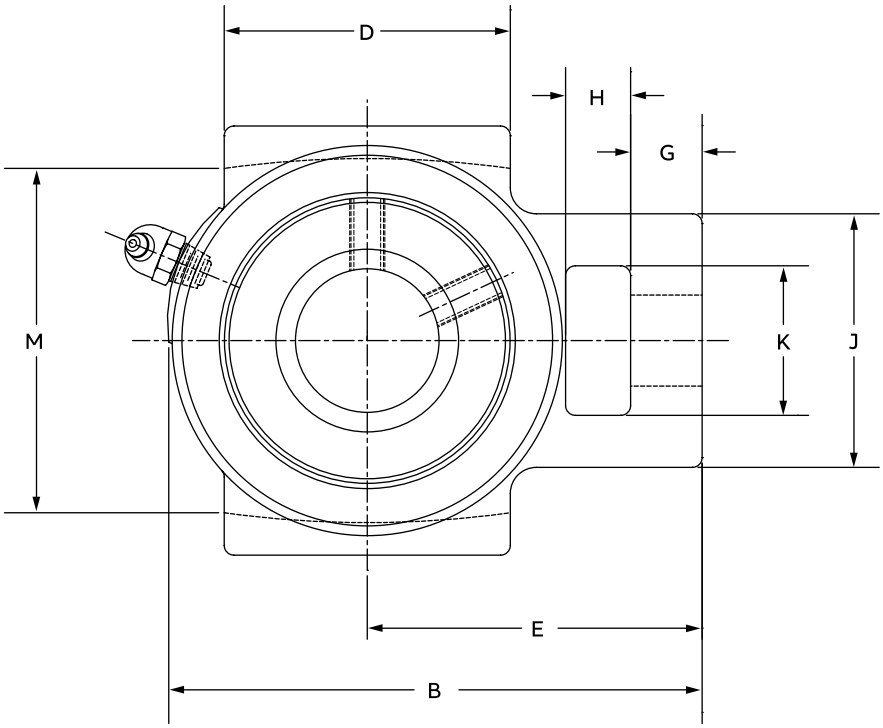

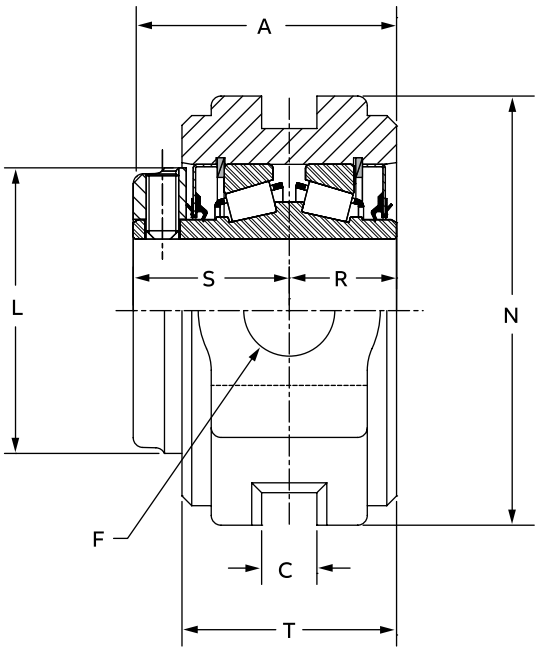

1-3/8” thru 3” Construction

Type K take-up – inch

Wide-slot (WS)

Gray iron

Shaft size	Part number	Description	Approx. weight (lbs)	CP frame size
1-7/16	023256	WSTU-K-107R	8	CP308
1-15/16	023261	WSTU-K-115R	11	CP400
2-3/16	023263	WSTU-K-203R	15	CP408
2-7/16	023265	WSTU-K-207R	20	CP502
2-1/2	023266	WSTU-K-208R	20	
2-15/16	023269	WSTU-K-215R	28	CP515
3	023270	WSTU-K-300R	28	

Shaft size	A	B	C*	D	E	F Screw dia.	G	H	J	K	L	M	N	R	S	T
1-7/16	2.53	5.09	0.53	2.75	3.22	3/4	0.69	0.63	2.44	1.44	2.75	3.50	4.13	1.03	1.50	2.06
1-15/16	2.97	6.31	0.69	3.75	3.94	1	0.94	0.75	3.31	1.94	3.44	4.00	4.75	1.20	1.75	2.44
2-3/16	3.16	7.13	0.81	3.75	4.63	1-1/8	1.00	1.25	3.88	2.25	3.75	4.50	5.25	1.25	1.88	2.56
2-7/16	3.38	7.891	1.06	4.50	5.06	1-1/2	1.06	1.25	4.25	2.50	4.06	5.13	6.00	1.31	2.00	2.75
2-1/2																
2-15/16	3.75	9.13	1.81	4.75	5.88	1-1/2	1.38	1.50	4.88	2.75	4.72	5.94	6.75	1.44	2.25	3.00
3																

Note: All sizes use a 1/8-27 NPT hydraulic grease fitting.
* Slot is "as cast" dimension.

Type K take-up – inch

Top-angle (TP)

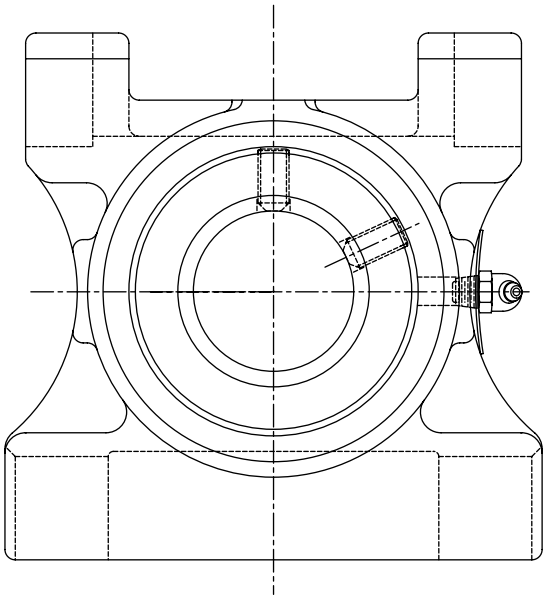

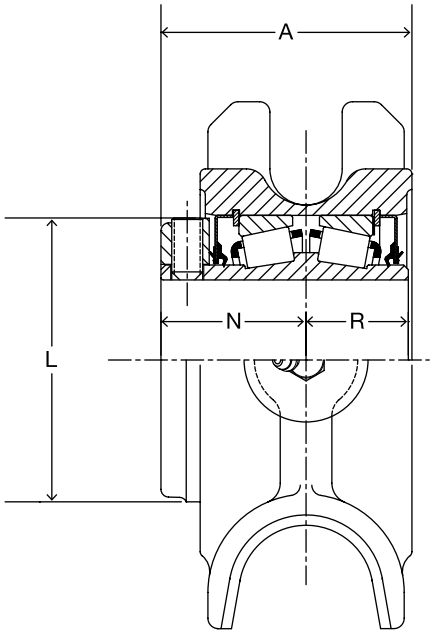

1-3/16” thru 3” Internal Construction

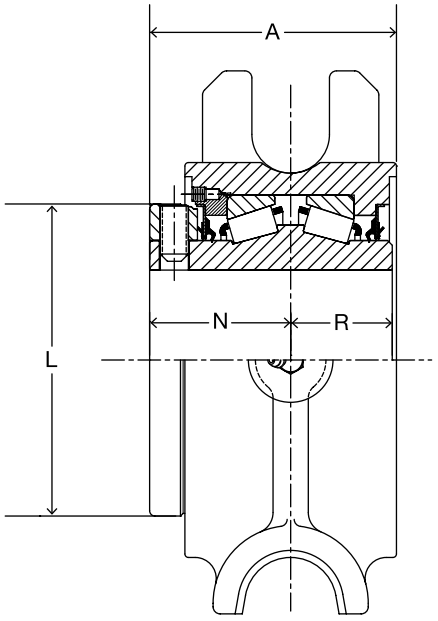

3-3/16” thru 3-15/16” Internal Construction

Type K take-up – inch

Top-angle (TP)

Gray iron

Shaft size	Part number	Description	Approx. weight (lbs)
1-15/16	023314	TP-K-115R	13
2-3/16	023316	TP-K-203R	16
2-7/16	023318	TP-K-207R	20
2-15/16	023322	TP-K-215R	27
3-7/16	023325	TP-K-307R	40
3-15/16	023327	TP-K-315R	59

Shaft size	Frame size ref.	A	L	N	R
1-15/16	TP10	3.03	3.44	1.75	1.22
2-3/16	TP20	3.19	3.75	1.88	1.25
2-7/16	TP30	3.50	4.06	2.00	1.31
2-15/16	TP40	3.75	4.72	2.25	1.44
3-7/16	TP50	4.28	5.50	2.41	1.78
3-15/16	TP60	5.50	6.00	3.13	2.13

Note: All sizes use a 1/8-27 NPT hydraulic grease fitting.

Selection

Type E family

Type E metric

Type E double-row tapered roller bearings have the capacity to carry heavy radial loads, thrust loads, and combined radial and thrust loads. The maximum recommended load which can be applied is limited by various components in the system such as bearing, housing, shaft, shaft attachment, speed and life requirements as listed in this catalog. Type E bearings have been applied successfully even when these limits have been exceeded under controlled operating conditions. Contact Application Engineering at +1 864 284 5700 for applications which exceed the recommendations of this catalog.

L_{10} hours life – The fatigue life which may be expected from at least 90 percent of a given group of bearings operating under identical conditions.

$$L_{10}\ \text{life, hours} = \left(\frac{C_{90}}{P}\right)^{10/3} \times \frac{1{,}500{,}000}{\text{rpm}}$$

Where:

C_{90} = Dynamic capacity, kN (Table 10)

P = Equivalent radial load, kN

General

Heavy service – For heavy shock loads, frequent shock loads, or severe vibrations, increase the equivalent radial load up to 50 percent (according to severity of conditions) to obtain a modified equivalent radial load. Consult Application Engineering at +1 864 284 5700 for additional selection assistance.

Thrust load values shown in the table below are recommended as a guide for general applications that will give adequate L_{10} life. With substantial radial loads also present, it is advisable to calculate actual L_{10} life to assure the bearing meets requirements.

Rpm range	20—200	201—2000	Over 2000
Recommennded thrust load	$C_{90}/4$	$C_{90}/8$	$C_{90}/12$

The shaft tolerances recommended below are adequate for the conditions outlined in this catalog. Since the allowable load, especially at a low speed, is very large, the shaft should be checked to assure adequate shaft strength.

The magnitude and direction of both the thrust and radial load must be taken into account when selecting a shaft size. Heavy loads should be directed through the base. Where uplift loads are involved see Table 13 for maximum values. Where a load pulls the housing away from the mounting base, both the hold-down bolts and housing must be of adequate strength. Auxiliary load carrying devices such as shear bars are advisable for side or end loading of plummer blocks.

Shaft tolerances

Shaft size (mm)	Tolerance (mm)
Up to 35	+0.000 to -0.013
40 to 100	+0.000 to -0.025
100—150	+0.000 to -0.038
160—180	+0.000 to -0.051

1. Define the desired L_{10} life, in hours
2. Establish bearing radial load, F_R, kN
3. Establish rpm

F_R = P for pure radial load conditions.

P = Equivalent radial load, kN

Using the easy selection Table 11, under the rpm column find the equivalent load that equals or is higher than the application radial load for the desired life. The shaft size on the far left will be the minimum shaft size that you can use for your application. If the desired life is different than the values shown on the chart, use alternate Method A shown below.

Example:

L_{10} life = 30,000 hours

Radial load = 19 kN

Rpm = 1000

At the intersection of the 1000 rpm column and at the 30,000 hours L_{10} life row, the equivalent radial load of 20 kN exceeds the 19 kN application radial load for shaft size 55 mm. Therefore, an 55 mm E bearing can be used to meet the application bearing conditions of the above example:

Alternate method A – Selecting a bearing for an L_{10} life value not shown in the Easy Selection chart.

The L_{10} life equation can be rearranged so that the bearing dynamic capacity C_{90} is identified in terms of L_{10}, rpm and P

$$C_{90} = \left(\frac{L_{10} \times \text{rpm}}{1{,}500{,}000}\right)^{0.3} \times P$$

($P = F_R$ for pure radial load conditions)

Since the L_{10}, rpm, and P are known, solve for C_{90}. Select from the dynamic capacity column on Table 10 the C_{90} value equal to or greater than the C_{90} value just calculated. The bore size on the far left represents the minimum shaft size selection. Check that the application rpm does not exceed the maximum rpm on Table 10. When selecting a L_{10} life of less than 30,000 hours particular attention must be paid to shaft deflection and proper lubricant selection.

Type E family

Type E metric

Selecting bearings supporting both radial and thrust loads

When a bearing supports both a radial load and a thrust load, the loading on the two rows is shared unequally depending on the ratio of thrust to radial load. The use of the X (radial factor) and Y (thrust factor) from Table 10 convert the applied thrust load and radial loads to an equivalent radial load having the same effect on the life of the bearing as a radial load of this magnitude.

The equivalent radial load

$$P = XF_R + YF_A$$

Where:

P = Equivalent radial load, kN

F_R = Radial load, kN

F_A = Thrust (axial) load, kN

e = Thrust load to radial load factor (Table 10)

X = Radial load factor (Table 10)

Y = Thrust load factor (Table 10)

Calculate F_A/F_R and compare to e for the selected bore size.

Determine X and Y from Table 10 depending on whether F_A/F_R is equal to or less than e, or F_A/F_R greater than e. Substitute all known values into the equivalent radial load equation. P (equivalent radial load) can be used in the life formula to determine L_{10} life in hours or compared to the allowable equivalent radial load ratings for the speed and hours life desired in the easy selection table.

Selecting bearings supporting only thrust loads

Type E tapered roller bearings are well suited to carry pure thrust loads. Follow the same selection procedure used above “Selecting bearings supporting both radial and thrust loads” except the equation $P = XF_R + YF_A$ reduces to $P = YF_A$. (XF_R is equal to zero).

Table 10: Radial and thrust factors for Type E metric

Shaft size (mm)	e	$F_A/F_R \le e$		$F_A/F_R > e$		Dynamic capacity C_{90}* kN	Maximum rpm	Maximum slip fit radial load, (Fr)kN**
		X	Y	X	Y			
35	0.46	0.87	1.89	0.70	2.28	27.7	3,820	22.2
40	0.44	0.87	1.96	0.70	2.37	35.6	3,320	28.5
45, 50	0.33	0.87	2.64	0.70	3.18	46.7	3,050	37.4
55	0.35	0.87	2.38	0.70	2.87	48.9	2,730	39.6
60, 65	0.40	0.87	2.17	0.70	2.63	52.5	2,420	42.2
70, 75	0.45	0.87	1.87	0.70	2.26	55.6	2,060	44.5
80, 85, 90	0.50	0.87	1.71	0.70	2.07	89	1,640	71.2
100	0.49	0.87	1.77	0.70	2.14	120.1	1,530	98.0
110, 115	0.53	0.87	1.63	0.70	1.97	149.5	1,360	120.0
125	0.47	0.87	1.83	0.70	2.21	206.4	1,200	164.6
135, 140, 150	0.49	0.87	1.76	0.70	2.12	195.7	915	188.6
160, 170, 180	0.54	0.87	1.61	0.70	1.95	320.3	790	320.2

Comparing spherical to taper roller bearing

The dynamic capacity C (spherical) and C_{90} (taper) are not to the same base. To compare basic dynamic capacities,multiply C x .259 and compare to C_{90}.

To select and then compare, use the complete selection procedure for each type bearing and then compare.

* C_{90} – Dynamic capacity based on a rated life of 90 million revolutions.

** If load exceeds maximum allowable slip fit radial load (F_R), line-to-line, to light press fit of shaft required. Application loads up to maximum slip fit radial load may be applied if recommended shaft tolerances are used.

Type E family

Type E metric

Table 11: Easy selection for Type E metric

Shaft size (mm)	L_{10} life hours	Allowable equivalent radial load rating (kN) at various revolutions per minute														
		50	100	150	250	500	750	1000	1250	1500	1750	2000	2500	2700	3000	3500
35	10,000	38	31	28	24	19	17	16	15	14	13	13	12	12	11	11
	30,000	28	22	20	17	14	12	11	11	10	10	9	9	8	8	8
	40,000	25	21	18	16	13	11	10	10	9	9	8	8	8	7	7
	60,000	22	18	16	14	11	10	9	9	8	8	7	7	7	7	6
	100,000	19	16	14	12	10	9	8	7	7	7	6	6	6	6	5
40	10,000	49	40	36	31	25	22	20	19	18	17	16	15	15	14	14
	30,000	36	29	26	22	18	16	14	14	13	12	12	11	11	10	10
	40,000	33	27	23	20	16	14	13	12	12	11	11	10	10	10	9
	60,000	29	23	21	18	14	13	12	11	10	10	10	9	9	8	8
	100,000	25	20	18	15	12	11	10	9	9	9	8	8	7	7	7
45 50	10,000	65	53	47	40	33	29	26	25	23	22	21	20	20	19	—
	30,000	47	38	34	29	23	21	19	18	17	16	15	14	14	14	—
	40,000	43	35	31	26	21	19	17	16	15	15	14	13	13	13	—
	60,000	38	31	27	23	19	17	15	14	14	13	13	12	11	11	—
	100,000	33	26	23	20	16	14	13	12	12	11	11	10	10	10	—
55	10,000	65	53	47	40	33	29	26	25	23	22	21	20	20	19	—
	30,000	47	38	34	29	23	21	19	18	17	16	15	14	14	14	—
	40,000	43	35	31	26	21	19	17	16	15	15	14	13	13	13	—
	60,000	38	31	27	23	19	17	15	14	14	13	13	12	11	11	—
	100,000	33	26	23	20	16	14	13	12	12	11	11	10	10	10	—
60 65	10,000	73	59	52	45	37	32	30	28	26	25	24	23	—	—	—
	30,000	52	43	38	32	26	23	21	20	19	18	17	16	—	—	—
	40,000	48	39	35	30	24	21	20	18	17	17	16	15	—	—	—
	60,000	43	35	31	26	21	19	17	16	15	15	14	13	—	—	—
	100,000	37	30	26	23	18	16	15	14	13	13	12	11	—	—	—
70 75	10,000	77	63	56	48	39	34	31	29	28	27	26	—	—	—	—
	30,000	56	45	40	34	28	25	23	21	20	19	18	—	—	—	—
	40,000	51	41	37	31	26	23	21	19	18	18	17	—	—	—	—
	60,000	45	37	32	28	23	20	18	17	16	16	15	—	—	—	—
	100,000	39	31	28	24	19	17	16	15	14	13	13	—	—	—	—
80 85 90	10,000	124	100	89	76	62	55	50	47	45	43	—	—	—	—	—
	30,000	89	72	64	55	45	39	36	34	32	31	—	—	—	—	—
	40,000	82	66	59	50	41	36	33	31	29	28	—	—	—	—	—
	60,000	72	59	52	45	36	32	29	28	26	25	—	—	—	—	—
	100,000	62	50	45	38	31	28	25	24	22	21	—	—	—	—	—
100	10,000	167	136	120	103	84	74	68	64	60	—	—	—	—	—	—
	30,000	120	98	86	74	60	53	49	46	43	—	—	—	—	—	—
	40,000	110	89	79	68	55	49	45	42	40	—	—	—	—	—	—
	60,000	98	79	70	60	49	43	40	37	35	—	—	—	—	—	—
	100,000	84	68	60	52	42	37	34	32	30	—	—	—	—	—	—

For maximum rpm see Table 10.

In the shaded area E, DI and TAF mounted units require a line-to-line to light press fit to shaft.

Type E family

Type E metric

Table 11: Easy selection for Type E metric

Shaft size (mm)	L_{10} life hours	Allowable equivalent radial load rating (kN) at various revolutions per minute														
		50	100	150	250	500	750	1000	1250	1500	1750	2000	2500	2700	3000	3500
110 115	10,000	208	169	149	128	104	92	85	79	—	—	—	—	—	—	—
	30,000	149	121	107	92	75	66	61	57	—	—	—	—	—	—	—
	40,000	137	111	99	85	69	61	56	52	—	—	—	—	—	—	—
	60,000	121	99	87	75	61	54	49	46	—	—	—	—	—	—	—
	100,000	104	85	75	64	52	46	42	40	—	—	—	—	—	—	—
125	10,000	287	233	206	177	144	127	117	109	—	—	—	—	—	—	—
	30,000	206	168	148	127	103	92	84	79	—	—	—	—	—	—	—
	40,000	189	154	136	117	95	84	77	72	—	—	—	—	—	—	—
	60,000	168	136	121	103	84	74	68	64	—	—	—	—	—	—	—
	100,000	144	117	103	89	72	64	59	55	—	—	—	—	—	—	—
135 140 150	10,000	272	221	196	168	136	121	111	—	—	—	—	—	—	—	—
	30,000	196	159	141	121	98	87	80	—	—	—	—	—	—	—	—
	40,000	180	146	129	111	90	80	73	—	—	—	—	—	—	—	—
	60,000	159	129	114	98	80	71	65	—	—	—	—	—	—	—	—
	100,000	136	111	98	84	68	61	56	—	—	—	—	—	—	—	—
160 170 180	10,000	445	362	320	275	223	198	—	—	—	—	—	—	—	—	—
	30,000	320	260	230	198	161	142	—	—	—	—	—	—	—	—	—
	40,000	294	239	211	181	147	130	—	—	—	—	—	—	—	—	—
	60,000	260	211	187	161	130	115	—	—	—	—	—	—	—	—	—
	100,000	223	181	161	138	112	99	—	—	—	—	—	—	—	—	—

For maximum rpm see Table 10.

In the shaded area E, DI and TAF mounted units require a line-to-line to ligh press fit to shaft.

Type E family

Type E metric

Lubrication

Type E metric tapered roller bearings are lubricated at the factory with Mobil Mobilgrease XHP222, a superior industrial grease using a lithium complex thickener and a highly refined base oil. This grease will adequately handle low and medium speeds with low and medium loads at normal temperatures as defined on Table 14. For very low and high speeds, for heavy loads, and for low and high temperatures, special greases must be used. Contact Application Engineering at +1 864 284 5700. Dodge engineers will recommend bearings and lubricants for the unusual conditions. Dodge also has the expertise to custom design and build special bearings for your needs. Refer to the mounted bearing grease calculator at ptwizard.com for application-specific recommendations.

High speed operation

In the higher speed ranges too much grease will cause overheating. The amount of grease that the bearing will take for particular high speed application can only be determined by experience. If excess grease in the bearing caused overheating, it will be necessary to remove grease fitting (also drain plug when furnished) to permit excess grease to escape. When establishing a relubrication schedule, note that a small amount of grease at frequent intervals is preferable to a large amount at infrequent intervals.

Operation in presence of dust, water or corrosive vapors

Under these conditions the bearing should contain as much grease as speed will permit, since a full bearing with consequent slight leakage is the best protection against entrance of foreign material. In the higher speed ranges too much grease will cause overheating—see “High speed operation”. In the lower speed ranges, it is advisable to add extra grease to a new bearing before putting into operation. Bearings should be greased as often as necessary (daily if required) to maintain a slight leakage at the seals.

Installation and maintenance

In nearly all applications, good design practice requires two bearings supporting the shaft. In cases where three or more bearings are installed, unless precautions are taken to line the bearings up, both vertically and horizontally, it is possible to induce heavy loads. To ensure good alignment, mounting surfaces must be checked for flatness and must lie in the same plane. When tightening base bolts and cap bolts, each bolt should be alternately tightened in incremental torque values until full torque is achieved to prevent the angular shifting of the pillow block that occurs when one bolt is tightened to its full torque. Shimming may be required to minimize misalignment.

Table 12: Relubrication schedule

Hours run per day	Suggested lubrication period in weeks							
	1 to 250 rpm	251 to 500 rpm	501 to 750 rpm	751 to 1000 rpm	1001 to 1500 rpm	1501 to 2000 rpm	2001 to 2500 rpm	2501 to 3000 rpm
8	12	12	10	7	5	4	3	2
16	12	7	5	4	2	2	2	1
24	10	5	3	2	1	1	1	1

Type E family

Type E metric

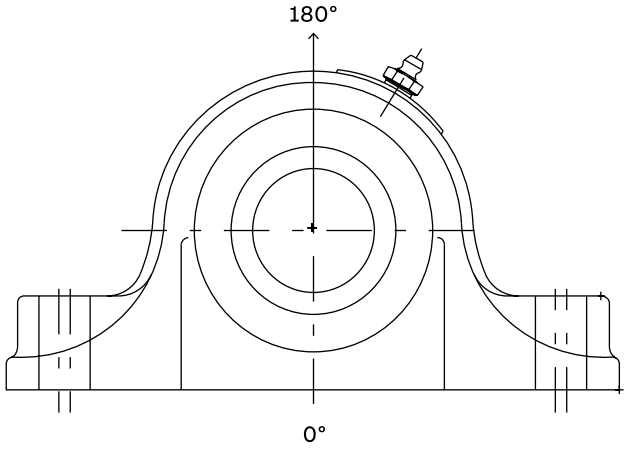

Table 13: Type housing ratings, gray iron

Bore size (mm)	Maximum housing cap loads, kN
	P180
35	14
40	13
45, 50	23
55	16
60, 65	29
70, 75	31
80, 85, 90	70
100	72
110, 115	93
125	116
135, 140, 150	194
160, 170, 180	204

Table 14: Definition of operating conditions for tapered roller bearings

Low speed	Up to 20% of max. rpm (Table 10)
Medium speed	Over 20% to 80% of max. rpm
High speed	Over 80% of max. rpm
Light load	Up to 30% of C_{90} (Table 10)
Normal load	Over 30% to 70% of C_{90}
Heavy load	Over 70% of C_{90}
Low temperature	-75 °C to - 10 °C
Medium temperature	Above - 10 °C to 100 °C
High temperature	Above 100 °C to 150 °C
Very high temperature	Above 150 °C to 205 °C

Dimensions

Type E pillow block – metric

2- and 4-bolt

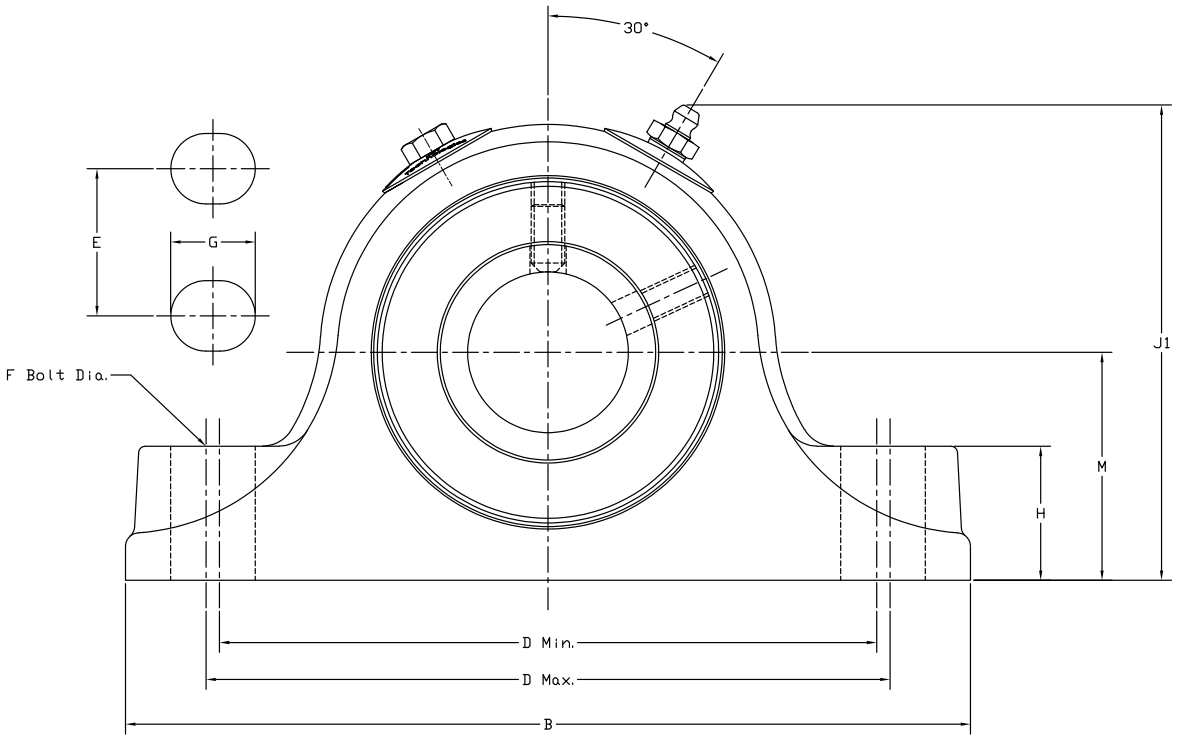

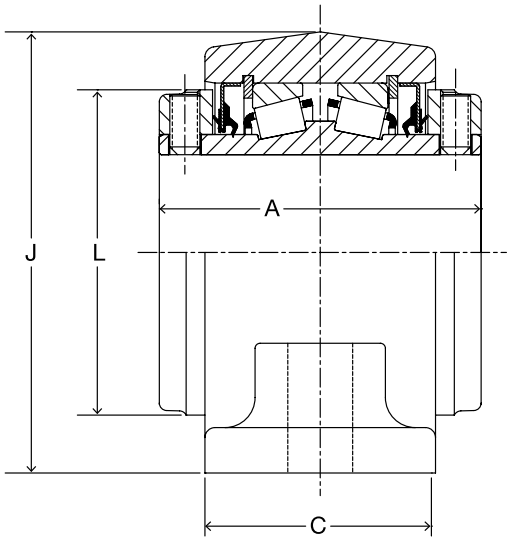

35 mm thru 90 mm construction

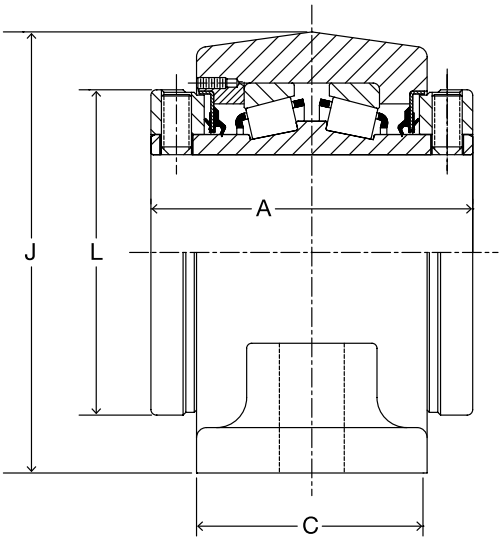

100 mm thru 125 mm construction

Type E pillow block – metric

2- and 4-bolt

2-bolt

Shaft size (mm)	Part number	Part description	Approx. weight (lbs)
35	023620	P2B-E-035MR	7
40	023621	P2B-E-040MR	10
45	023622	P2B-E-045MR	12
50	023623	P2B-E-050MR	12
55	023624	P2B-E-055MR	15
60	023625	P2B-E-060MR	20
65	023626	P2B-E-065MR	20
70	023627	P2B-E-070MR	29
75	023628	P2B-E-075MR	27
80	023629	P2B-E-080MR	49
85	023630	P2B-E-085MR	47
90	023631	P2B-E-090MR	45

4-bolt

Shaft size (mm)	Part number	Part description	Approx. weight (lbs)
100	023632	P4B-E-100MR	69
110	023633	P4B-E-110MR	85
115	023634	P4B-E-115MR	91
125	023635	P4B-E-125MR	136
135	023636	P4B-E-135MR	245
140	023637	P4B-E-140MR	240
150	023638	P4B-E-150MR	235
160	023639	P4B-E-160MR	355
170	023640	P4B-E-170MR	345
180	023641	P4B-E-180MR	345

2-bolt

Shaft size (mm)	A	B	C	D		F bolt	G	H	J1	L	M
				Min.	Max.						
35	76.2	187.0	54.0	142.8	149.2	M12	19	29	101.6	70	47.6
40	85.7	200.0	60.0	155.5	161.9	M12	19	32	113.5	81	54.0
45 50	88.9	225.0	64.0	174.6	181.0	M16	22	33	119	87	57.2
55	95.3	244.0	67.0	193.7	200.0	M16	22	38	131.4	95	63.5
60 65	101.6	267.0	73.0	212.7	219.0	M16	22	41	142.8	103	69.9
70 75	114.3	305.0	76.0	236.5	246.0	M20	27	48	161.1	120	79.4
80 85 90	127.0	356.0	89.0	274.6	284.2	M20	30	57	190.5	139.7	95.3

4-bolt

Shaft size (mm)	A	B	C	D		E	F bolt	G	H	J1	L	M
				Min.	Max.							
100	158.8	387	114	311.2	323.9	57.2	M20	28	62	216	152.4	108.0
110 115	171.5	422	117	336.6	349.3	63.5	M20	28	70	238	164	120.7
125	184.2	470	130	387.4	400.0	73.0	M24	32	76	276	189	139.7
135 140 150	228.6	559	159	441.3	485.8	95.3	M24	51	83	335	238	169.9
160 170 180	266.7	660	181	539.8	590.6	117.5	M24	51	94	379	289	190.5

Double Interlock – metric

S-1 inner unit

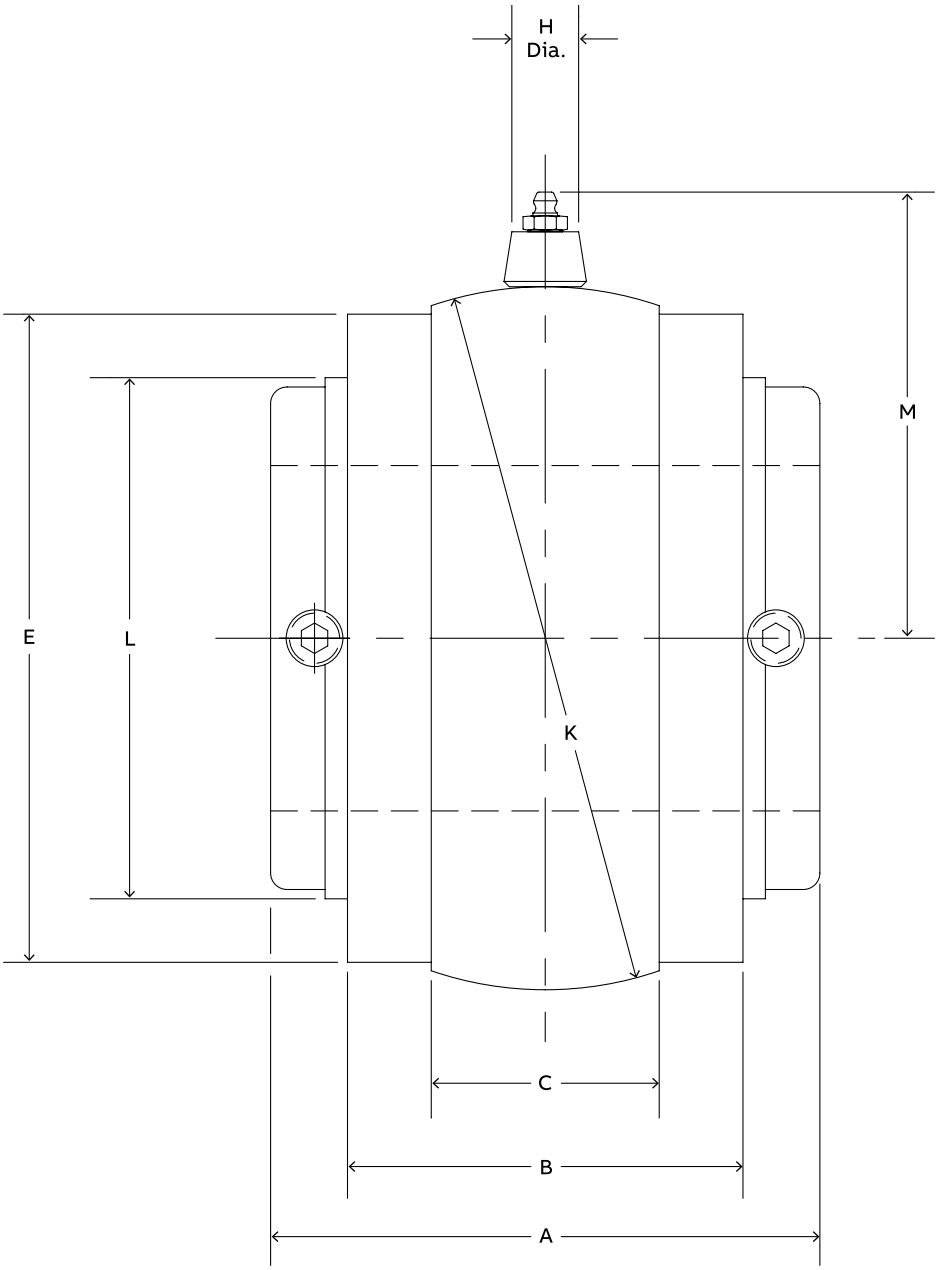

Double Interlock – metric

S-1 inner unit

Gray iron

Shaft size (mm)	Part number	Part description	Approx. weight (lbs)
35	023700	S1U-DI-035M	5
40	023701	S1U-DI-040M	6
45	023702	S1U-DI-045M	8
50	023703	S1U-DI-050M	8
55	023704	S1U-DI-055M	10
60	023705	S1U-DI-060M	11
65	023706	S1U-DI-065M	10
70	023707	S1U-DI-070M	17
75	023708	S1U-DI-075M	17
80	023709	S1U-DI-080M	33
85	023710	S1U-DI-085M	32
90	023711	S1U-DI-090M	31
100	023712	S1U-DI-100M	42
110	023713	S1U-D1-110M	55
115	023714	S1U-DI-115M	71
125	023715	S1U-DI-125M	85

Shaft size (mm)	A	B	C	E		H dia.	K	L	M
				Mach. size	Cast. size				
35	3.00	2.063	1.156	3.250	3-5/16	0.688	3.625 ▲	2.750	2.640
40	3.375	2.313	1.188	3.750	3-13/16	0.688	4.125 ▲	3.188	2.890
45	3.500	2.875	1.500	4.125	4-3/16	0.688	4.562 ▲	3.438	3.100
50									
55	3.750	2.563	1.563	4.500	4-5/8	0.688	5.000 ▲	3.750	3.320
60	4.000	2.750	1.438	4.812	4-7/8	0.688	5.186 ▲	4.063	3.410
65									
70	4.500	3.000	1.875	5.563	5-5/8	0.688	6.061 ▲	4.719	3.850
75									
80	5.000	3.500	2.00	6.813	6-7/8	0.688	7.373#	5.531	4.510
85									
90									
100	6.250	4.500	2.375	7.438	7-1/2	0.313	7.997#	6.125	5.160
110	6.750	4.625	2.375	8.313	8-3/8	0.313	8.872#	6.438	5.600
115									
125	7.250	5.125	2.875	9.563	9-5/8	0.313	10.184#	7.438	6.260

All dimensions are shown in inches unless noted otherwise.

▲ +.000" to -.001"

+/-.0005"

Accessories

E-Tect seal kit– inch

Type E, TAF, Double Interlock, and Type K

Shaft size	Kit part number
1-3/16 to 1-1/4	037650 *
1-3/8 to 1-7/16	037651 *
1-1/2 to 1-11/16	037652 *
1-3/4 to 2	037653 *
2-3/16	037654 *
2-1/4 to 2-1/2	037655 *
2-11/16 to 3	037656 *
3-3/16 to 3-1/2	037657 *
3-15/16 to 4	037658 *
4-7/16 to 4-1/2	037659 *
4-15/16 to 5	037660 *
5-7/16 to 6	037673 **
6-7/16 to 7	037674 **

* Kit includes one collar, set screws and seal

** Kit for 5-7/16" and larger consists of a modified V-ring seal. This seal can only be used with bearings produced after September 1995

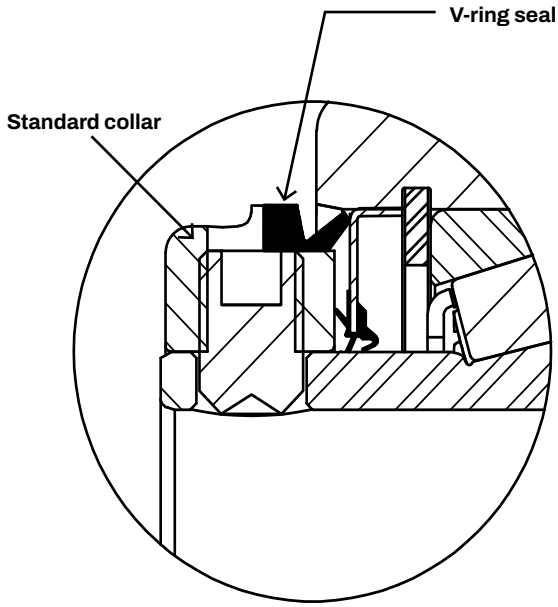

E-Tect seal
1-3/16" through 5"

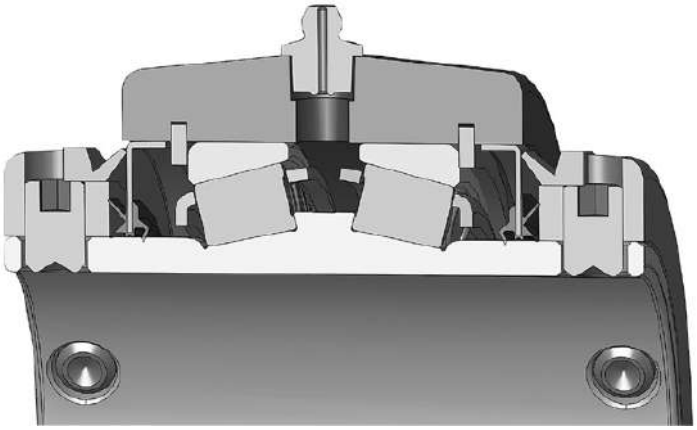

XTS sealing with E-Tect option

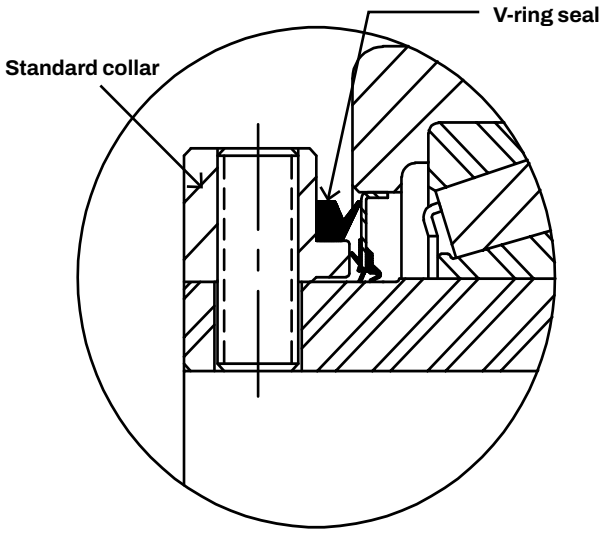

E-Tect seal
5-7/16" through 7"

End cover kit – inch

Type E

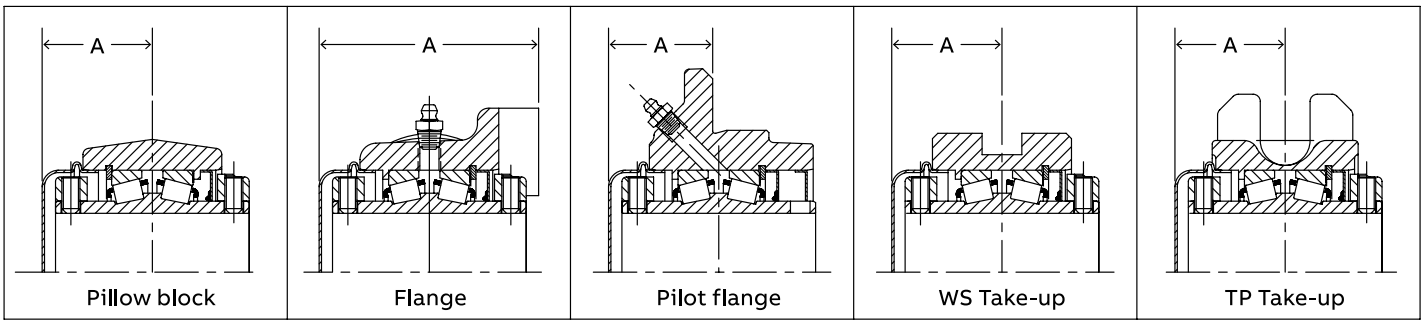

Shaft size Δ	Kit* part number	"A" Dimension				
		Pillow block	flange	Pilot flange	WS take-up	TP take-up
1-3/16 to 1-1/4	023795	1.56	2.97	1.47	—	—
1-3/8 to 1-7/16	023796	1.34	3.22	1.66	1.66	—
1-1/2 to 1-11/16	023797	1.89	3.67	1.73	1.76	—
1-3/4 to 2	023798	1.95	3.80	1.73	1.92	1.98
2-3/16	023799	2.09	4.06	1.88	2.06	2.06
2-1/4 to 2-1/2	023800	2.25	4.38	2.00	2.19	2.31
2-11/16 to 3	023801	2.44	4.88	2.19	2.44	2.44

Δ - Consult Dodge for sizes not listed.

* - Kit includes end cover and special collar.

End cover kit – inch

TAF, Double Interlock, and Type K

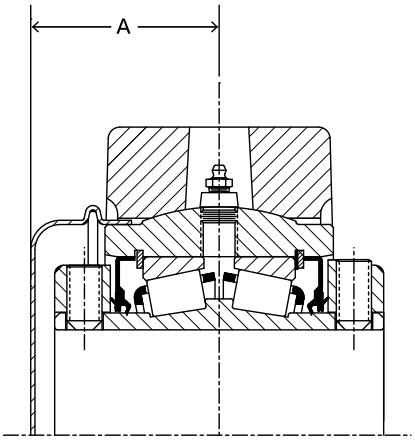

Pillow block - TAF, Double Interlock, and Type K (Double Interlock shown)

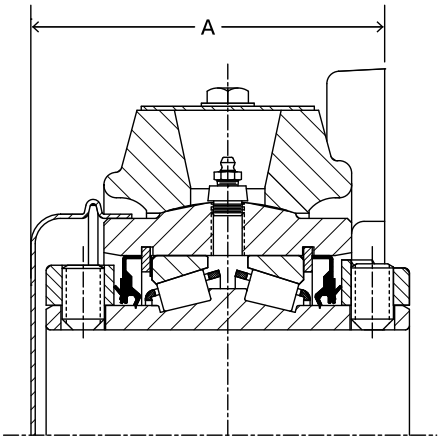

Flange - Double Interlock and Type K (Double Interlock shown)

Shaft size	Part number	"A" Dimension	
		Pillow block	Flange bearing
1-3/8 to 1-7/16	037681	1.66	2.84
1-1/2 to 1-11/16	037682	1.86	3.17
1-3/4 to 2	037683	1.92	3.30
2-3/16	037684	2.06	3.50
2-1/4 to 2-1/2	037685	2.19	3.75
2-11/16 to 3	037686	2.44	4.19
3-3/16 to 3-1/2	037687	2.69	4.94
3-15/16 to 4	037688	3.31	5.81
4-7/16 to 4-1/2	037689	3.56	5.88
4-15/16 to 5	037690	3.81	6.31
5-7/16 to 6*	141152	5.28	—
6-7/16 to 7*	141153	6.52	—

End cover mounts on machined OD side of S-1 unit.

* Cover bolts are supplied to attach cover to bearing face.

Notes

Specialty (tapered)

B21-1	**Specialty (tapered)**
B21-2	**Features and benefits**
B21-4	**Specification**
B21-6	**How to order**
B21-7	**Nomenclature**
B21-8	**Selection**
B21-16	**Dimensions**
B21-16	Type C
B21-16	Pillow block
B21-20	Flange
B21-22	Inner unit
B21-24	Take-up
B21-26	Hanger
B21-28	Special Duty
B21-28	Pillow block
B21-34	Flange
B21-36	Inner unit
B21-40	Hinged cap pillow block
B21-42	Hinged cap inner unit

Features and benefits

Specialty tapered

Type C

- Positive concentric clamp-sleeve mounting
- Steel labyrinth seals
- Two quality single-row tapered roller assemblies
- Rugged two-piece housing
- Elongated bolt holes

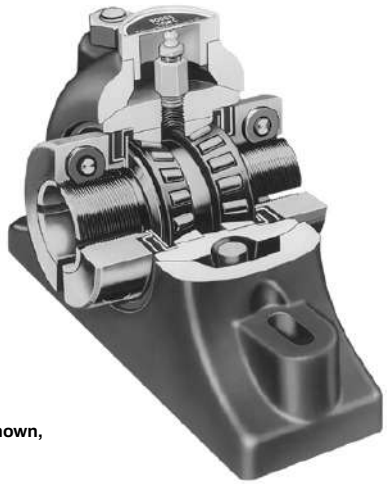

2-1/2" to 5" NE construction shown, expansion also available



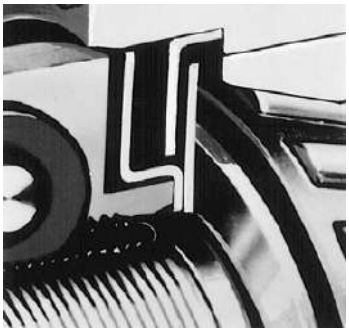



Clamp sleeve mounting

- Two quality single-row tapered bearings press-fitted on sleeve
- Outer races shouldered against rib in housing
- Offers improved concentricity over other collar mounted types of bearings
- Best bearing unit for wheel or sprocket applications
- Two-piece split collars used on 2-1/2" and larger sizes
- Single-piece split collars used on smaller sizes
- Performs flinger-like function to keep contaminants away from seal

Steel labyrinth seals

- Combine with collars offering excellent resistance to keep contaminants out of the bearing
- Sealed bearing both on and off the shaft before, during, and after installation
- Ideal for applications where dirt and dust are severe

Rugged two-piece outer housing

- Split housing of heavy-duty gray-iron construction houses completely assembled inner unit
- Elongated bolt holes provide lateral adjustment for ease of installing pillow blocks

Note: Instruction manuals for Dodge bearings are available on dodge.ptplace.com

Specialty tapered

Special Duty

- Quality duplex tapered roller bearing
- Tapered adapter sleeve mounting
- Effective piston ring seals
- Rugged two-piece housing
- Elongated bolt holes

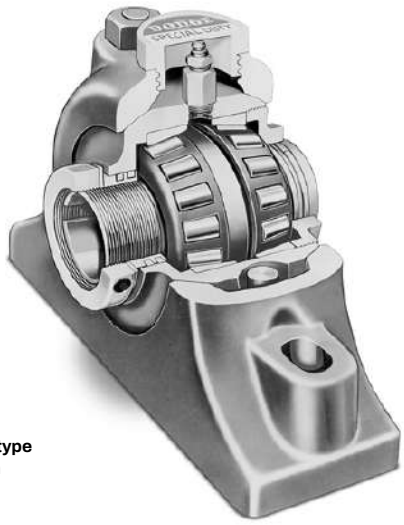

1-3/8” to 3-1/2” NE type construction shown

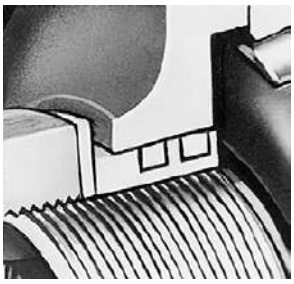







Dual piston ring seals

- Contained within self-aligning inner unit; unaffected by misalignment
- Sealed bearing both on and off the shaft before, during, and after installation
- Extremely close clearances exclude contaminants from entering bearings

Tapered adapter sleeve mounting

- A split-tapered adapter sleeve extending through the entire length of the pillow block is used to securely fasten the bearing to the shaft tighter than shorter adapter sleeves
- A single adapter nut is used on sizes 3-1/2” and smaller with two adapter nuts being used on the larger sizes. The adapter nut at the large end of the taper can be used to remove the bearing from the shaft

Duplex tapered roller bearing

- Uses case-hardened inner race, outer races, and rollers with adapter-sleeve mounting for unsurpassed load-handling capability and longer useful bearing life
- Handles any combination of radial and thrust load from 100 percent radial load to 100 percent thrust load

Rugged two-piece outer housing

- Split housing of heavy-duty gray-iron construction houses completely assembled inner unit
- Elongated bolt holes provide lateral adjustment for ease of installing pillow blocks

Specification

Specialty tapered

Type C

The standard housing material for Type C mounted bearings is high-performance cast iron having a minimum tensile strength of 30,000 psi. The outer housings for the pillow blocks and flange bearings are of split construction for ease of replacement of the completely assembled, adjusted and lubricated inner units. The housings for the take-ups, hanger bearings, D, S-1 and B-1 units are of solid one piece construction. Pillow blocks and flange bearings are available in both expansion and non-expansion styles. Take-up and hanger bearings are available as non-expansion only.

The Type C mounted bearing has indirect mounted tapered roller bearings press fitted on a common sleeve with the outer race shouldered against a rib in the housing. The tapered roller bearings used in the Type C mounted bearings have case carburized inner races (cones), outer races (cups), and rollers.

The Type C bearing is mounted to the shaft by clamping the sleeve to the shaft at the slotted threaded end of the sleeve with flinger collars. These collars are one-piece construction for sizes through 2-1/2", while larger sizes use two-piece collars The bearing rating for the Type C is determined by the sleeve, resulting in a L_{10} life at maximum speed of at least 100,000 hours.

Steel labyrinth seals are used to offer extra resistance to keep contaminants out of the bearing before, during, and after installation.

Type C available in:

- 2-bolt pillow blocks, 1-3/16" to 3-7/16"
- 4-bolt pillow blocks, 2-3/8" to 4-15/16"
- 4-bolt flanges, 1-7/16" to 3-7/16"
- All in either expansion or non-expansion



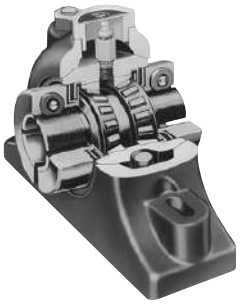

Hanger bearings, 1-15/16" to 3-7/16"



Take-up bearings, 1-7/16" to 2-15/16"



D, S-1 or B-1 units, 1-7/16" to 4-15/16"







Specialty tapered

Special Duty

The standard housing material for Special Duty mounted bearings is a high-performance cast iron. The outer housings for the pillow blocks and flange bearings are of split construction for ease of replacement of the completely assembled, adjusted and lubricated inner units. The housings for the D, S-1, and B-1 units are of solid one-piece construction. Pillow blocks and flange bearings are available in both expansion and non-expansion types.

Special Duty mounted bearings have duplex tapered roller mounted to the shaft with a tapered adaptor sleeve extending through the complete length of the pillow block. The tapered roller bearings used in the Special Duty mounted bearings all have case-carburized inner races (cone), outer races (cup), and rollers. A single adapter nut is used on sizes through 3-1/2" with two adaptor nuts being used on the larger sizes. The nut at the large end of the taper can be used to remove the bearing from the shaft.

Special Duty mounted bearings have two piston ring seals running in grooves in the seal ring carriers at each end of the units to seal the bearings both on and off the shaft. Sizes through 3-1/2" use a grooved seal ring carrier at one end and grooved adaptor at the opposite end for carrying the piston ring seals. Larger sizes have grooved adaptor nuts to carry the piston ring seals.

Hinged cap Special Duty

The standard housing material for Special Duty hinged cap bearings is a high-performance cast iron. The housing is equipped with a brass hand wheel for ease of removal of the S-1 unit from the pillow block housing. Hinged cap pillow blocks are available in both expansion and non-expansion types.

Hinged cap pillow blocks and units are mounted to the shaft with a tapered adapter sleeve extending completely through the unit. The tapered adapter sleeve is equipped with micro mount removal screws for ease of demounting the bearing from the shaft.

The hinged cap pillow blocks are arranged for relubrication from the end of the pillow block rather than from the top of the pillow block.

Special Duty available in:



Pillow blocks, 2-bolt
1-3/8" to 3-1/2"
Pillow blocks, 4-bolt
2-3/8" to 6"



Flange bearings
4-bolt, 1-7/16" to 6"



All in either expansion or non-expansion D, S-1 and B-1 Unit, 1-3/8" to 6"

Hinged cap pillow blocks available in:

- 2-bolt base, 1-3/8" to 3"
- Expansion or non-expansion

Hinged cap S-1 units 1-3/8" to 3"



How to order

Specialty tapered

Type C and Special Duty

There are two ways to specify Dodge bearings—by six-digit part number or by description. Most of the products offered have part numbers with listings shown throughout this catalog. Use of part numbers ensures accurate order processing.

When part numbers are not shown, the product may be specified by description. This method is used when ordering units that include modifications or options. To order by description, use the nomenclature key shown for each product, adding any special instructions to the end of the description for options not covered by the nomenclature.

Special bearing requirements

Depending on the bearing, a wide variety of lubricants, seals, locking devices, finishes, and adjustments are available for a wide range of applications from general purpose to extreme ambient temperatures, high speeds, or high loads.

Special lubricant options usually involve set-up charges, minimum quantities, and price premiums. To order, specify the type of lubricant required at the end of the product name or after the standard part number.

Example:

F4B-XX-207 except with Mobil HTS #2 grease

or

P/N-XXXXXX except with Mobil HTS #2 grease

Other special requirements not listed

For applications requiring modifications not listed, contact Application Engineering for bearings at +1 864 284 5700.

Nomenclature

Specialty tapered

Type C and Special Duty

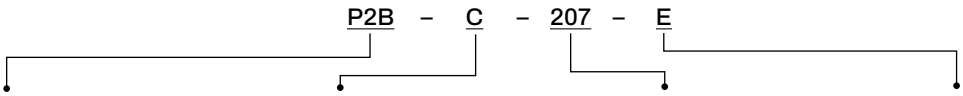

Housing style

P2B = Pillow block
2-bolt, cast iron

P4B = Pillow block
4-bolt, cast iron

F4B = Flange bearing
4-bolt, cast iron

B1U = B-1 unit, cast iron

DU = D unit, cast iron

S1U = S-1 unit, cast iron

CRT = Cartridge unit
ductile-iron end plates

NSTU = Narrow slot take-up
bearing, cast iron

HNG = Hanger bearing, cast iron

Bearing type

C = Type C

SD = Special duty

HC = Hinged cap

Size

Inches and 16th

2 = 2 inches

07 = 7/16 inches
or

207 = 2-7/16"

Other data

E = Expansion type bearing

If E does not appear after seal type, then bearing is non-expansion type.

Selection

Specialty tapered

Type C

The capacity of the Type C bearing is designed to handle loads normally imposed on the shaft. However, due to the assembly method and method of fastening the bearing to the shaft, there are necessary clearances between the sleeve and the shaft except at the two ends. Consequently, under heavy loads a flexing and stressing of the sleeve will take place as the shaft rotates. For this reason, the radial load ratings shown in Table 1 are based on the sleeve capacity under maximum clearance conditions rather than on the capacity of the roller bearings themselves.

Sleeve capacity being independent of speed, the table gives maximum recommended bearing loads at all allowable speeds and is based on the use of shafting tolerances.

Type C bearings are primarily utilized on radial load applications. They have ample thrust capacity for use as the locating bearing normally encountered with this type service. If heavy thrust loads are involved, Application Engineering should be contacted for a review of the application. The maximum thrust load should not exceed Type C pillow block limits shown in Table 3.

Since these ratings are considerably less than the base bearing ratings, the resulting life expectancy is, for all practical purposes, contingent only on proper lubrication.

Table 1: Type C radial load ratings

Shaft size (in)	Radial load rating (lbs) *	Maximum rpm
1-3/16—1-7/16	725	3000
1-1/2—1-3/4	1000	3000
1-15/16	1350	2500
2—2-1/4	1700	2500
2-3/8—2-7/16	2100	2000
2-1/2—2-15/16	3000	1750
3 - 3—7/16	4000	1500
3-1/2—4	5500	1250
4-7/16—4-1/2	6500	1000
4-15/16—5	7500	750

* More than 100,000 L_{10} hours life at maximum rpm listed.

Table 2: Type C expansion capability (in)

Shaft size	Type C		
	2-bolt pillow block	4-bolt pillow block	Flange
1-3/16 —1-7/16	3/16	—	3/16
1-1/2—1-3/4	5/8	—	1/4
1-15/16	5/8	—	1/4
2—2-1/4	5/8	—	1/4
2-3/8—2-7/16	5/8	5/8	1/4
2-1/2—2-15/16	3/4	5/8	5/8
3 —3-7/16	3/4	3/4	1/4
3-1/2 —4	—	3/4	1/4
4-7/16—4-1/2	—	3/4	5/8
4-15/16—5	—	3/4	5/8

Table 3: Type C pillow block permissible thrust load ♦

Shaft size (in)	Thrust loads (lbs) ♦	
	2-bolt	4-bolt
1-3/16—1-7/16	3000	—
1-1/2—1-3/4	3150	—
1-15/16	5000	—
2—2-3/16	5000	—
2-3/8—2-7/16	7300	10000
2-1/2—2-15/16	6900	9300
3—3-7/16	5700	12000
3-1/2—4	—	12000
4-7/16—4-1/2	—	12000
4-15/16—5	—	16500

♦ The limits in above apply to pillow blocks.
For thrust loads larger than listed or heavy thrust loading on other style housings, contact Application Engineering for recommendation.

Specialty tapered

Special Duty

Special Duty double-row mounted tapered roller bearings have the highest capacity of all Dodge tapered roller bearings. They carry heavy radial loads and combined radial and thrust loads. The maximum recommended load which can be applied is limited by various components in the system such as bearing, housing, shaft, shaft attachment, speed and life requirements as listed in this catalog. Special Duty bearings have been applied successfully even when these limits have been exceeded under controlled operating conditions. Contact Application Engineering at +1 864 284 5700 for applications which exceed the recommendations of this catalog.

L_{10} hours life – The life which may be expected from at least 90 percent of a given group of bearings operating under identical conditions.

$$L_{10} = \left(\frac{C_{90}}{P}\right)^{10/3} \times \left(\frac{1{,}500{,}000}{\text{rpm}}\right)$$

Where:

C_{90} = Dynamic capacity, lbs (Table 4)

P = Equivalent radial load, lbs

General

Heavy service – For heavy shock loads, frequent shock loads, or severe vibrations, add up to 50 percent (according to severity of conditions) to the equivalent radial load. Consult Dodge Application Engineering for additional selection assistance.

Thrust load values shown in the table below are recommended as a guide for general applications that will give adequate L_{10} life for pillow blocks. The maximum thrust load should not exceed values shown on Table 6. Where substantial radial load is also present, it is advisable to calculate actual L_{10} life to assure that it meets the requirements. The effectiveness of the shaft attachment to carry thrust load depends on proper tightening, shaft tolerance (see shaft tolerances table) and shaft deflections. Therefore, it is advisable to use auxiliary thrust-carrying devices such as shaft shoulder, snap ring or a thrust collar to locate the bearing under thrust loads heavier than shown below, or where extreme reliability is desired.

Rpm range	20—200	201—2000	Over 2000
Recommended thrust load	$C_{90}/4$	$C_{90}/8$	$C_{90}/12$

The shaft tolerances recommended below are adequate for normal radial and radial/thrust load applications. Since the allowable load, especially at a low speed, is very large, the shaft should be checked to assure adequate shaft strength.

The magnitude and direction of both the thrust and radial load must be taken into account when selecting a housing. When pillow blocks are utilized, heavy loads should be directed through the base. Where uplift loads are involved, see Table 9 for maximum values. Where a load pulls the housing away from the mounting base, both the hold-down bolts and housing must be of adequate strength. Auxiliary load-carrying devices such as shear bars are advisable for side or end loading of pillow blocks and radial load for flange units.

Shaft tolerances

Shaft size (in)	Tolerance (in)
Up to 1-1/2	+0.000 to -0.002
1-9/16 to 2-1/2	+0.000 to -0.003
2-1/2 to 4	+0.000 to -0.004
4-3/16 to 6	+0.000 to -0.005

Selecting bearings supporting radial loads only

1. Define L_{10} life hours desired.
2. Establish bearing radial load, F_R (F_R = P for pure radial load conditions).
3. Establish rpm.

Using the easy selection Table 5, find under the rpm column, the equivalent radial load that equals or is higher than the application radial load for the desired life. The shaft size on the far left will be the minimum shaft size that you can use for your application. If the desired life is different than the values shown on the chart, use alternate Method A shown below.

Example:

L_{10} life = 30,000 hours

Radial load = 3,800 lbs

Rpm = 1,000

At the intersection of the 1,000 rpm column and the 30,000 hours L_{10} life row, the equivalent radial load of 3,977 pounds exceeds the 3,800 pounds Radial load for shaft sizes 1-3/8 to 1-1/2 inches. A bearing with bore ranging from 1-3/8 to 1-1/2 inches may be used for this application.

Alternate method A – Selecting a bearing for an L_{10} life value not shown in the easy selection chart.

Specialty tapered
Special Duty

The L_{10} life equation can be rearranged so that the bearing dynamic capacity C is identified in terms of L_{10}, rpm and P.

$$C_{90} = \left(\frac{L_{30} \times rpm}{1{,}500{,}000} \right)^{0.3} X \quad P$$

($P = F_R$ for pure radial load conditions)

Since the L_{10}, rpm, and P are known, solve for C_{90}. Select from the dynamic capacity column on Table 4, the C_{90} value equal to or greater than the C_{90} value just calculated. The bore size on the far left represents the bore size selection. Check that the application rpm does not exceed the maximum rpm in Table 4. When selecting an L_{10} life of less than 30,000 hours, particular attention must be paid to shaft deflection and proper lubricant selection.

Selecting bearings supporting combination radial and thrust loads

When a bearing supports both a radial load and a thrust load, the loading on the two rows is shared unequally depending on the ratio of thrust to radial load. The use of the X (radial factor) and Y (thrust factor) from Table 4 converts the applied thrust load and radial loads to an equivalent radial load having the same effect on the life of the bearing as a radial load of this magnitude.

The equivalent radial load

$$P = XF_R + YF_A$$

Where:

P = Equivalent radial load, lbs
F_R = Radial load, lbs
F_A = Thrust (axial) load, lbs
e = Thrust load to radial load factor (Table 4)
X = Radial load factor (Table 4)
Y = Thrust load factor (Table 4)

To find X and Y, calculate F_A/F_R and compare to e for the selected bore size. Determine X and Y from Table 4, depending on whether F_A/F_R is equal to or less than e, or F_A/F_R is greater than e. Substitute all known values into the equivalent radial load equation. P (equivalent radial load) can be used in the life formula to determine L_{10}, or it can be compared to the allowable equivalent radial load ratings for the speed and hours life desired in the easy selection Table 5.

Selecting bearings supporting only thrust loads

Tapered roller bearings perform extremely well under pure thrust load applications. Use $P = YF_A$ for the equivalent radial load. The value of Y is obtained from Table 4 for $F_A/F_R > e$. Substitute Y and F_A into the equivalent load equation. P (equivalent radial load) can be used in the life formula to determine L_{10} or it can be compared to the allowable equivalent radial load ratings for the speed and hours life desired in the easy selection Table 5.

Lubrication

Special Duty tapered roller bearings are lubricated at the factory with Mobilgrease XHP222. This grease will adequately handle low and medium speeds with low and medium loads at normal temperatures as defined on Table 8 for very low and high speeds, for heavy loads and for low and high temperatures, special greases must be used. Contact Dodge Application Engineering at +1 864 284 5700. Dodge engineers will recommend bearings and lubricants for the above unusual conditions. Dodge also has the expertise to custom design and build special bearings for your needs. The only maintenance requirement for Dodge tapered roller bearings is periodic relubrication at regular intervals as outlined in the appropriate instruction manuals.

Installation and maintenance

In nearly all applications, good design practice requires two bearings supporting the shaft. In cases where three or more bearings are installed, unless precautions are taken to align the bearings both vertically and horizontally, it is possible to induce heavy loads. In the case of two bearings, alignment is not as critical, especially with Special Duty tapered roller bearings. Special Duty bearings are designed to allow as much as 2 to 5 degrees of static misalignment for bore sizes up to 6 inches and 1 to 1.5 degrees for bore sizes greater than 8 inches. To ensure good alignment, mounting surfaces must be checked for flatness and must lie in the same plane. When tightening base bolts and cap bolts, each bolt should be alternately tightened in incremental torque values until full torque is achieved to prevent the angular shifting of the pillow block that occurs when one bolt is tightened to its full torque. Shimming may be required to minimize misalignment.

Specialty tapered

Special Duty

Table 4: Special Duty roller bearings radial/thrust factors

Bore size (in)	e	$F_A/F_R \leq e$		$F_A/F_R > e$		Dynamic capacity C_{90}		Maximum
		X	Y	X	Y	lbs	Newtons	rpm
1-3/8 to 1-11/2	0.31	1	0	0.40	1.97	9,770	43,460	3250
1-9/16 to 1-3/4	0.43	1	0	0.40	1.39	11,600	51,600	2900
1-7/8 to 2	0.46	1	0	0.40	1.31	11,800	52,490	2700
2-1/8 to 2-1/4	0.49	1	0	0.40	1.23	11,623	51,700	2300
2-3/8 to 2-1/2	0.51	1	0	0.40	1.18	11,954	53,170	2180
2-5/8 to 3	0.27	1	0	0.40	2.23	29,754	132,350	1830
3-3/16 to 3-1/2	0.43	1	0	0.40	1.39	33,756	150,150	1510
3-11/16 to 4	0.43	1	0	0.40	1.41	36,700	163,250	1330
4-7/16 to 4-1/2	0.49	1	0	0.40	1.23	36,700	163,250	1120
4-15/16 to 5	0.46	1	0	0.40	1.31	62,000	275,873	1040
5-7/16 to 6	0.48	0.87	1.80	0.70	2.18	62,000	275,873	860

Comparing spherical to taper roller bearing.
The dynamic capacity C (spherical) and C_{90} (taper) are not to the same base.
To compare basic dynamic capacities, multiply C x .259 and compare to C_{90}.

Specialty tapered

Special Duty

Table 5: Easy selection for Special Duty tapered roller bearings

Bore size (in)	L_{10} life hours	Allowable equivalent radial load rating (lbs) at various revolutions per minute												
		50	100	250	500	750	1000	1250	1500	1750	2000	2500	3000	3500
1-3/8 1-7/16 1-1/2	5,000	16724	13584	10319	8382	7422	6808	6367	6028	5756	5530	5172	4897	4675
	10,000	13584	11034	8382	6808	6028	5530	5172	4897	4675	4492	4201	3977	3798
	30,000	9770	7936	6028	4897	4336	3977	3720	3522	3363	3231	3021	2861	2731
	50,000	8382	6808	5172	4201	3720	3412	3191	3021	2885	2772	2592	2454	2343
	100,000	6808	5530	4201	3412	3021	2772	2592	2454	2343	2251	2105	1993	1903
1-9/16 1-5/8 1-11/16 1-3/4	5,000	19857	16129	12252	9952	8812	8083	7560	7158	6834	6566	6141	5814	—
	10,000	16129	13100	9952	8083	7158	6566	6141	5814	5551	5333	4988	4722	—
	30,000	11600	9422	7158	5814	5148	4722	4416	4181	3992	3836	3587	3396	—
	50,000	9952	8083	6141	4988	4416	4051	3789	3587	3425	3291	3078	2914	—
	100,000	8083	6566	4988	4051	3587	3291	3078	2914	2782	2673	2500	2367	—
1-7/8 1-15/16 2	5,000	20199	16407	12463	10123	8964	8223	7690	7281	6952	6679	6246	—	—
	10,000	16407	13326	10123	8223	7281	6679	6246	5914	5647	5425	5074	—	—
	30,000	11800	9585	7281	5914	5237	4804	4493	4253	4061	3902	3649	—	—
	50,000	10123	8223	6246	5074	4493	4121	3854	3649	3484	3347	3131	—	—
	100,000	8223	6679	5074	4121	3649	3347	3131	2964	2830	2719	2543	—	—
2-1/8 2-3/16 2-1/4	5,000	19896	16160	12276	9972	8830	8099	7575	7172	6848	6579	—	—	—
	10,000	16160	13126	9972	8099	7172	6579	6153	5825	5562	5344	—	—	—
	30,000	11623	9441	7172	5825	5158	4732	4425	4190	4000	3843	—	—	—
	50,000	9972	8099	6153	4998	4425	4059	3796	3594	3432	3297	—	—	—
	100,000	8099	6579	4998	4059	3594	3297	3084	2920	2788	2678	—	—	—
2-3/8 2-7/16 2-1/2	5,000	20462	16621	12626	10256	9081	8330	7791	7376	7043	6766	—	—	—
	10,000	16621	13500	10256	8330	7376	6766	6328	5991	5720	5496	—	—	—
	30,000	11954	9710	7376	5991	5305	4866	4551	4309	4114	3953	—	—	—
	50,000	10256	8330	6328	5140	4551	4175	3905	3697	3530	3391	—	—	—
	100,000	8330	6766	5140	4175	3697	3391	3172	3003	2867	2754	—	—	—
2-5/8 2-11/16 2-3/4 2-15/16 3	5,000	50932	41370	31427	25526	22603	20734	19391	18359	17530	—	—	—	—
	10,000	41370	33603	25526	20734	18359	16841	15751	14912	14238	—	—	—	—
	30,000	29754	24168	18359	14912	13204	12113	11328	10725	10241	—	—	—	—
	50,000	25526	20734	15751	12794	11328	10392	9719	9201	8786	—	—	—	—
	100,000	20734	16841	12794	10392	9201	8441	7894	7474	7136	—	—	—	—
3-3/16 3-3/8 3-7/16 3-1/2	5,000	57783	46934	35654	28960	25643	23523	22000	20829	—	—	—	—	—
	10,000	46934	38122	28960	23523	20829	19106	17869	16918	—	—	—	—	—
	30,000	33756	27418	20829	16918	14980	13742	12852	12168	—	—	—	—	—
	50,000	28960	23523	17869	14514	12852	11789	11026	10439	—	—	—	—	—
	100,000	23523	19106	14514	11789	10439	9576	8956	8479	—	—	—	—	—
3-11/16 3-3/4 3-7/8 3-15/16 4	5,000	62822	51027	38763	31486	27879	25574	23918	—	—	—	—	—	—
	10,000	51027	41447	31486	25574	22645	20773	19428	—	—	—	—	—	—
	30,000	36700	29810	22645	18394	16287	14940	13973	—	—	—	—	—	—
	50,000	31486	25574	19428	15780	13973	12817	11988	—	—	—	—	—	—
	100,000	25574	20773	15780	12817	11349	10411	9737	—	—	—	—	—	—
4-7/16 4-1/2	5,000	62822	51027	38763	31486	27879	25574	—	—	—	—	—	—	—
	10,000	51027	41447	31486	25574	22645	20773	—	—	—	—	—	—	—
	30,000	36700	29810	22645	18394	16287	14940	—	—	—	—	—	—	—
	50,000	31486	25574	19428	15780	13973	12817	—	—	—	—	—	—	—
	100,000	25574	20773	15780	12817	11349	10411	—	—	—	—	—	—	—

Specialty tapered

Special Duty

Table 5: Easy selection for Special Duty tapered roller bearings

Bore size (in)	L_{10} life hours	Allowable equivalent radial load rating (lbs) at various revolutions per minute											
		50	100	250	500	750	1000	1250	1500	1750	2000	2500	3000	3500
4-15/16 5	5,000	106130	86204	65486	53191	47099	43204	—	—	—	—	—	—	—
	10,000	86204	70020	53191	43204	38256	35093	—	—	—	—	—	—	—
	30,000	62000	50360	38256	31074	27515	25240	—	—	—	—	—	—	—
	50,000	53191	43204	32821	26659	23605	21653	—	—	—	—	—	—	—
	100,000	43204	35093	26659	21653	19173	17588	—	—	—	—	—	—	—
5-7/16 5-15/16 6	5,000	106130	86204	65486	53191	47099	—	—	—	—	—	—	—	—
	10,000	86204	70020	53191	43204	38256	—	—	—	—	—	—	—	—
	30,000	62000	50360	38256	31074	27515	—	—	—	—	—	—	—	—
	50,000	53191	43204	32821	26659	23605	—	—	—	—	—	—	—	—
	100,000	43204	35093	26659	21653	19173	—	—	—	—	—	—	—	—

Specialty tapered

Special Duty

Table 6: Special Duty pillow blocks housing permissible thrust load (lbs)*

Shaft size (in)	2-bolt	4-bolt
1-3/8		
1-7/16	1521	—
1-1/2		
1-9/16		
1-5/8	1772	—
1-11/16		
1-3/4		
1-7/8		
1-15/16	1964	—
2		
2-1/8		
2-3/16	2325	—
2-1/4		
2-3/8		
2-7/16	3122	3122
2-1/2		
2-5/8		
2-11/16		
2-3/4		
2-13/16	4375	4375
2-7/8		
2-15/16		
3		
3-3/16		
3-1/4		
3-3/8	6118	6118
3-7/16		
3-1/2		
3-11/16		
3-3/4	—	8250
3-7/8		
3-15/16		
4		
4-7/16	—	10538
4-1/2		
4-15/16		12190
5	—	
5-7/16		17957
5-15/16		
6		

* The limits above apply to pillow blocks. For thrust loads larger than listed or heavy thrust loading on other style housing, contact Dodge Engineering for recommendation.

Table 7: Special Duty maximum total axial expansion (in)

Shaft size	2-bolt pillow block	4-bolt pillow block	Flange
1-3/8—1-1/2	3/16	—	3/16
1-9/16—1-3/4	5/8	—	1/4
1-7/8—2	5/8	—	1/4
2-1/8—2-1/4	5/8	—	1/4
2-3/8—2-1/2	5/8	5/8	1/4
2-5/8—3	3/4	5/8	5/8
3-3/16—3-1/2	3/4	3/4	3/4
3-11/16—4	—	3/4	1/4
4-7/16—4-1/2	—	3/4	5/8
4-15/16—5	—	3/4	5/8
5-7/16—6	—	3/4	5/8

Specialty tapered

Special Duty

Table 8: Definition of operating conditions for tapered roller bearings

Low speed	Up to 20% of maximum rpm (Table 4)
Medium speed	Over 20% to 80% of maximum rpm
High speed	Over 80% of maximum rpm
Light load	Up to 30% of C_{90} (Table 4)
Normal load	Over 30% to 70% of C_{90}
Heavy load	Over 70% of C_{90}
Low temperature	-100 °F to 20 °F
Medium temperature	Over 20 °F to 200 °F
High temperature	Over 200 °F to 300 °F
Very high temperature	Over 300 °F to 400 °F

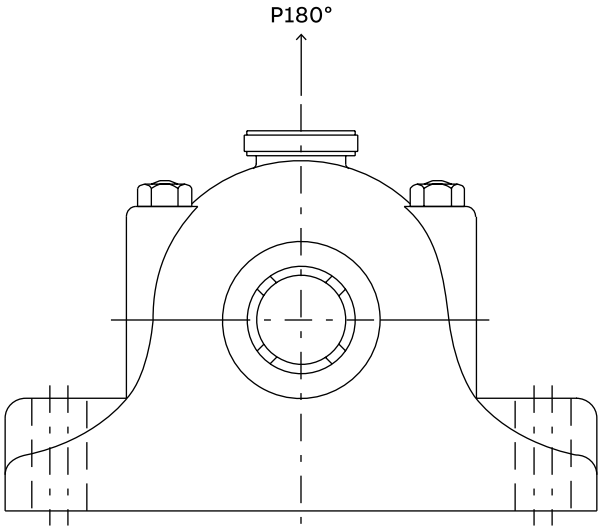

Table 9: Special Duty pillow block housing ratings

Shaft size (in)	Housing strength (lbs) Gray iron 180°
1-3/8—1-1/2	3,470
1-9/16—1-3/4	4,430
1-7/8—2	5,250
2-1/8—2-1/4	7,300
2-3/8—2-1/2	7,200
2-5/8—3	10,600
3-3/16—3-1/2	13,000
3-11/6—4	21,600
4-7/16—4-1/2	25,800
4-15/16—5	22,900
5-7/16—6	41,500

Dimensions

Type C pillow block – inch

2-bolt

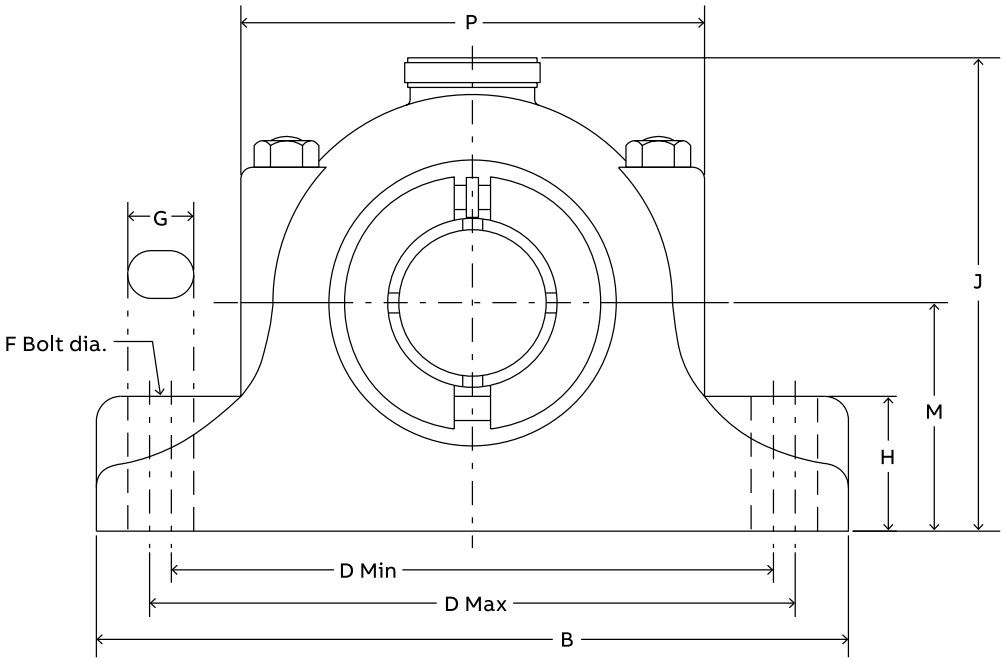

Note: All sizes use a 1/8 - 27 NPT hydraulic grease fitting

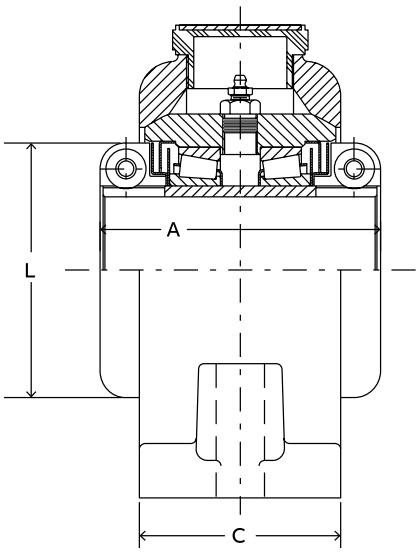

Non-Expansion construction

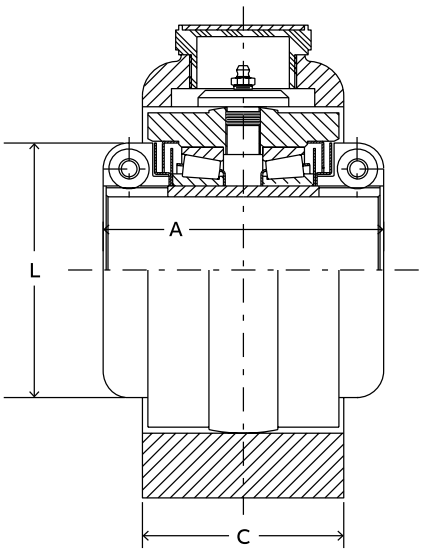

Expansion construction

Type C pillow block – inch

2-bolt

Gray iron – Non-expansion*

Shaft size	Part number	Description	Approx. weight (lbs)
1-3/16	065289	P2B-C-103	21
1-1/4	065311	P2B-C-104	20
1-7/16	065290	P2B-C-107	20
1-1/2	065312	P2B-C-108	28
1-11/16	065291	P2B-C-111	28
1-3/4	065238	P2B-C-112	26
1-15/16	065292	P2B-C-115	29
2	065313	P2B-C-200	47
2-3/16	065293	P2B-C-203	47
2-1/4	065314	P2B-C-204	47
2-7/16	065294	P2B-C-207	57
2-1/2	065315	P2B-C-208	83
2-11/16	065295	P2B-C-211	83
2-7/8	065244	P2B-C-214	83
2-15/16	065296	P2B-C-215	83
3	065316	P2B-C-300	132
3-3/16	065317	P2B-C-303	132
3-7/16	065297	P2B-C-307	128

Gray iron – Expansion

Shaft size	Part number	Description	Approx. weight (lbs)
1-3/16	087262	P2B-C-103E	22
1-1/4	087263	P2B-C-104E	22
1-7/16	087180	P2B-C-107E	20
1-1/2	087264	P2B-C-108E	28
1-11/16	087181	P2B-C-111E	28
1-3/4	087172	P2B-C-112E	28
1-15/16	087182	P2B-C-115E	29
2	087265	P2B-C-200E	49
2-3/16	087183	P2B-C-203E	49
2-1/4	087266	P2B-C-204E	49
2-7/16	087184	P2B-C-207E	57
2-1/2	087267	P2B-C-208E	90
2-11/16	087185	P2B-C-211E	90
2-7/8	087178	P2B-C-214E	90
2-15/16	087186	P2B-C-215E	90
3	087268	P2B-C-300E	135
3-3/16	087269	P2B-C-303E	135
3-7/16	087187	P2B-C-307E	131

* Furnished unless otherwise specified.

Shaft size	A	B*	C*	D		F bolt dia.	G*	H*	J	L Δ	M	P*	EXP**
				Min.	Max.								
1-3/16													
1-1/4	4.50	9.00	3.00	6.88	7.63	1/2	1.00	2.13	6.25	3.09	2.88	5.88	3/16
1-7/16													
1-1/2													
1-11/16	4.88	9.50	3.38	7.38	8.13	1/2	0.81	2.38	6.81	3.50	3.13	6.50	5/8
1-3/4													
1-15/16	5.25	11.00	3.50	8.50	9.00	5/8	1.25	2.50	7.13	3.88	3.25	7.38	5/8
2													
2-3/16	5.75	12.00	4.00	9.25	10.25	5/8	1.18	2.88	8.00	4.38	3.75	8.00	5/8
2-1/4													
2-7/16	6.00	13.25	4.25	10.13	11.38	3/4	1.50	3.00	8.56	4.66	4.00	8.88	5/8
2-1/2													
2-11/16	6.50	14.25	4.75	11.13	12.38	3/4	1.50	3.75	9.88	5.44	4.75	9.88	3/4
2-7/8													
2-15/16													
3													
3-3/16	7.00	16.75	5.50	13.75	14.25	7/8	1.50	4.00	11.38	5.94	5.50	11.63	3/4
3-7/16													

Note: All sizes use a 1/8-27 NPT hydraulic grease fitting.

* These are as cast surfaces. Dimensions may fluctuate due to draft angles and pattern shifts.

Δ A one-piece collar furnished up through 2-7/16 sizes. Larger sizes use a two-piece collar.

** EXP – Total expansion for expansion bearing only.

Type C pillow block – inch

4-bolt

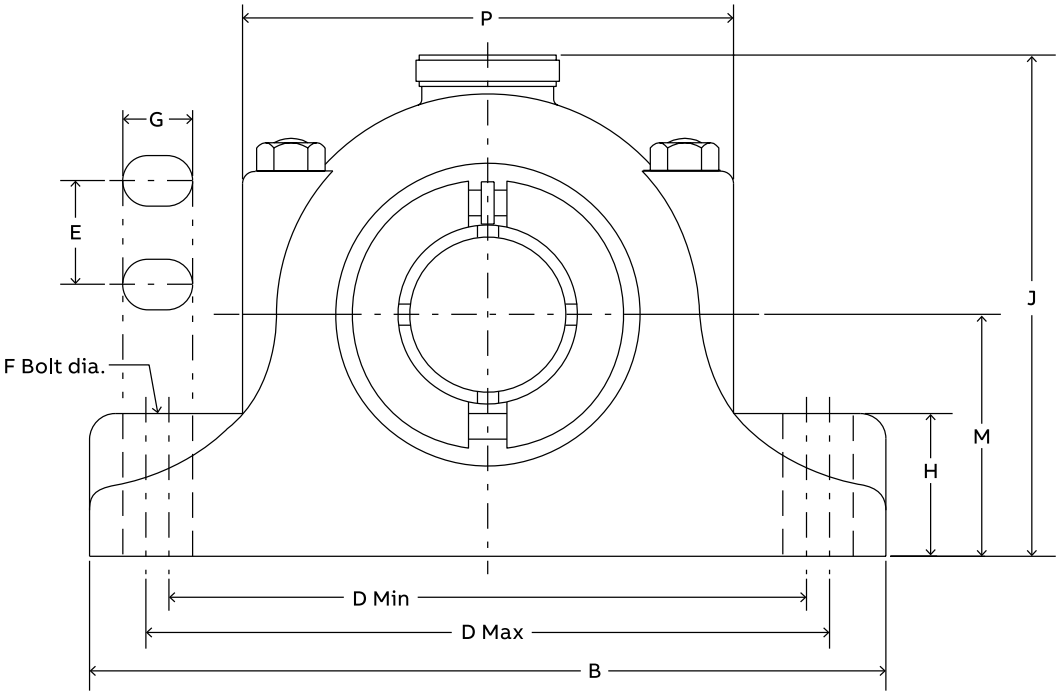

Note: All sizes use a 1/8 - 27 NPT hydraulic grease fitting

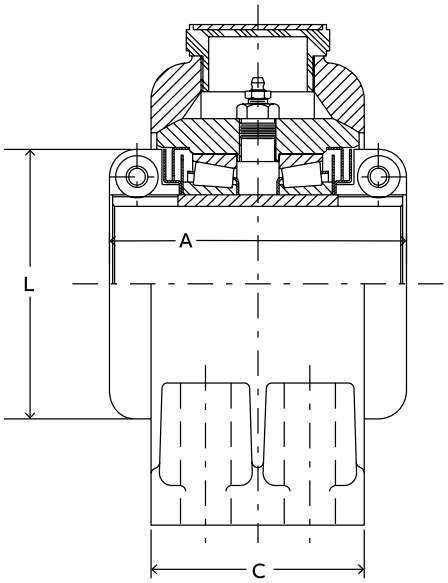

Non-Expansion construction

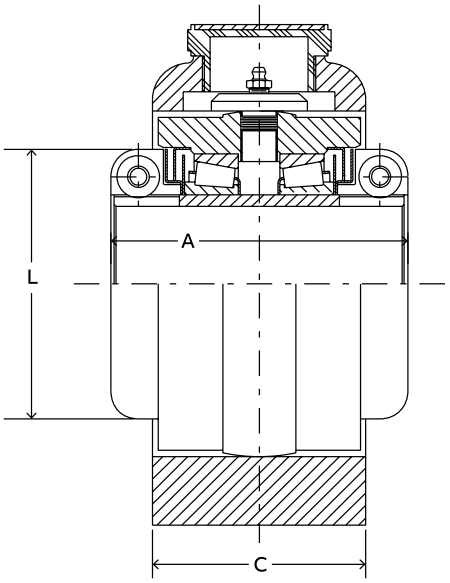

Expansion construction

Type C pillow block – inch

4-bolt

Gray iron – Non-expansion*

Shaft size	Part number	Description	Approx. weight (lbs)
2-7/16	065310	P4B-C-207	59
2-15/16	065302	P4B-C-215	85
3-7/16	065303	P4B-C-307	130
3-15/16	065298	P4B-C-315	230
4-7/16	065299	P4B-C-407	280
4-15/16	065300	P4B-C-415	370

* Furnished unless otherwise specified.

Gray iron – Expansion

Shaft size	Part number	Description	Approx. weight (lbs)
2-7/16	087191	P4B-C-207E	59
2-15/16	087192	P4B-C-215E	85
3-7/16	087193	P4B-C-307E	135
3-15/16	087188	P4B-C-315E	230
4-7/16	087189	P4B-C-407E	290
4-15/16	087190	P4B-C-415E	380

Shaft size	A	B*	C*	D		E	F bolt dia.	G*	H*	J	L Δ	M	P*	EXP**
				Min.	Max.									
2-7/16	6.00	13.25	4.25	10.00	11.50	2.50	5/8	1.50	3.00	8.50	4.66	4.00	8.88	5/8
2-15/16	6.50	14.25	4.75	11.00	12.50	2.75	5/8	1.50	3.75	9.88	5.44	4.75	9.88	5/8
3-7/16	7.00	16.75	5.50	12.88	14.63	3.25	3/4	1.50	4.00	11.38	5.94	5.50	11.63	3/4
3-15/16	9.50	19.00	7.00	15.00	16.00	3.25	7/8	1.50	4.00	13.38	7.38	6.38	13.88	3/4
4-7/16	10.00	20.00	7.50	15.63	17.38	3.50	7/8	1.88	4.00	14.50	8.38	7.25	15.25	3/4
4-15/16	11.25	23.00	8.25	17.75	19.75	3.75	1	2.13	4.25	15.63	9.38	7.50	16.75	3/4

Note: All sizes use a 1/8-27 NPT hydraulic grease fitting.

* These are as cast surfaces. Dimensions may fluctuate due to draft angles and pattern shifts.

Δ A one-piece collar furnished up through 2-7/16 sizes. Larger sizes use a two-piece collar.

** EXP – Total expansion for expansion bearing only.

Type C flange – inch

4-bolt

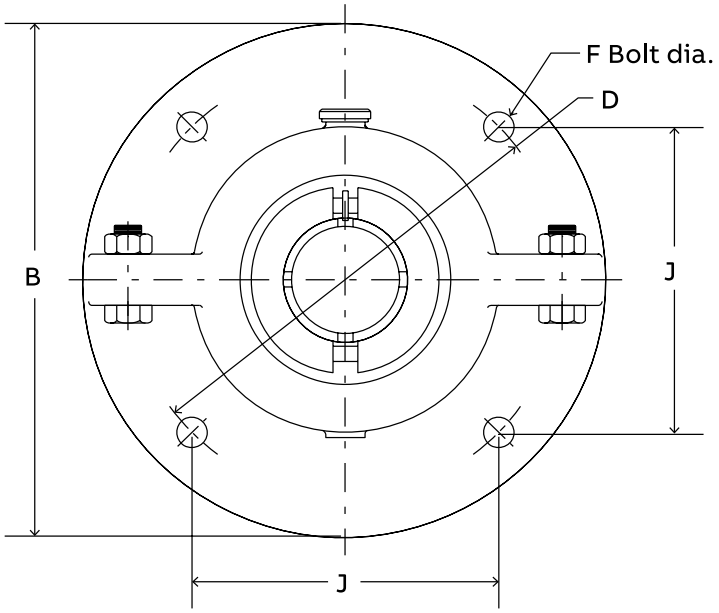

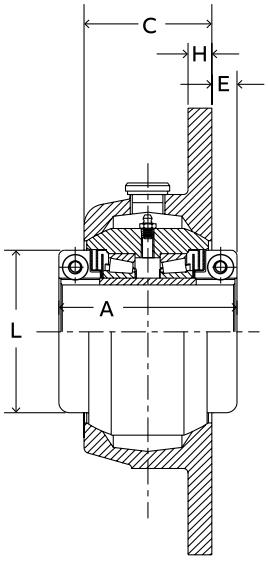

Non-Expansion construction

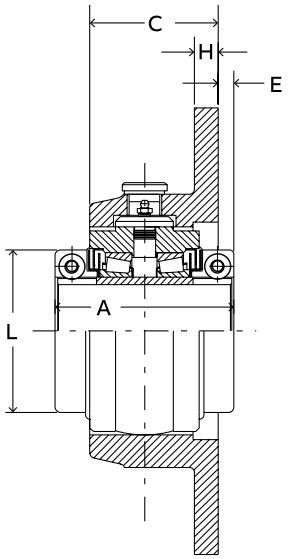

Expansion construction

Type C flange – inch

4-bolt

Gray iron – Non-expansion*

Shaft size	Part number	Description	Approx. weight (lbs)
1-7/16	104040	F4B-C-107	21
1-11/16	104041	F4B-C-111	31
1-3/4	104106	F4B-C-112	31
1-15/16	104042	F4B-C-115	37
2-3/16	104043	F4B-C-203	49
2-7/16	104044	F4B-C-207	63
2-15/16	104045	F4B-C-215	98
3	104119	F4B-C-300	140
3-7/16	104046	F4B-C-307	140

* Furnished unless otherwise specified.

Gray iron – Expansion

Shaft size	Part number	Description	Approx. weight (lbs)
1-7/16	104050	F4B-C-107E	21
1-11/16	104051	F4B-C-111E	31
1-3/4	104078	F4B-C-112E	31
1-15/16	104052	F4B-C-115E	38
2-3/16	104053	F4B-C-203E	49
2-7/16	104054	F4B-C-207E	63
2-15/16	104055	F4B-C-215E	98
3	104090	F4B-C-300E	140
3-7/16	104056	F4B-C-307E	140

Shaft size	A	B	C	D	E	F bolt dia.	H	J	L Δ	EXP*
1-7/16	4.50	8.25	3.00	7.00	0.75	1/2	0.63	4.95	3.09	3/16
1-11/16	4.88	9.00	3.38	7.63	0.75	1/2	0.69	5.39	3.50	1/4
1-3/4										
1-15/16	5.25	10.00	3.50	8.38	0.88	5/8	0.75	5.92	3.88	1/4
2-3/16	5.75	10.75	4.00	9.13	0.88	5/8	0.81	6.45	4.38	1/4
2-7/16	6.00	12.00	4.25	10.25	0.88	3/4	0.88	7.25	4.66	1/4
2-15/16	6.50	13.00	4.63	11.25	0.94	3/4	1.00	7.96	5.44	5/8
3	7	14.50	5.375	12.5	0.81	7/8	1.13	8.839	5.94	1/4
3-7/16										

Δ A one-piece collar furnished up through 2-7/16 sizes. Larger sizes use a two-piece collar.

* EXP - Total expansion for expansion bearing only.

Type C inner unit – inch

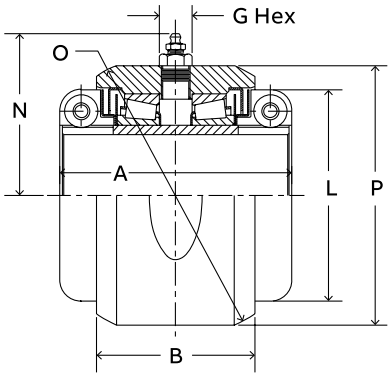

D Unit
Used in Non-Expansion Housings

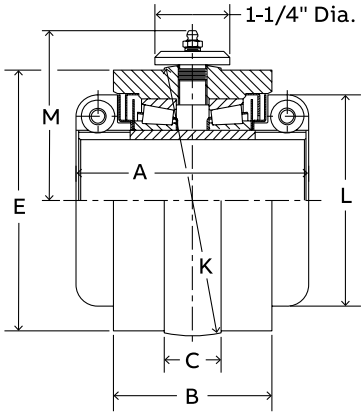

S-1 Unit
Used in Expansion Housings

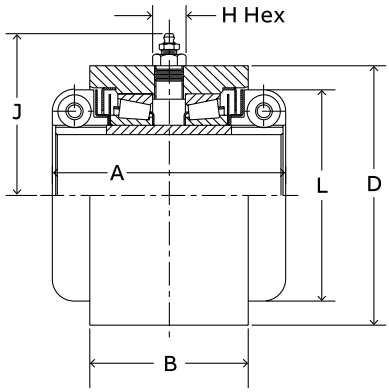

B-1 Unit
Used in Customer Manufactured Housings

Shaft size	D units		S-1 units		B-1 units		Approx. weight (lbs)
	Part number	Description	Part number	Description	Part number	Description	
1-7/16	065282	DU-C-107	087199	S1U-C-107	069060	B1U-C-107	7
1-1/2	065258	DU-C-108	087205	S1U-C-108	—	—	11
1-11/16	065283	DU-C-111	087200	S1U-C-111	069061	B1U-C-111	11
1-3/4	065260	DU-C-112	087207	S1U-C-112	—	—	11
1-15/16	065284	DU-C-115	087194	S1U-C-115	069062	B1U-C-115	12
2	065262	DU-C-200	087209	S1U-C-200	069034	B1U-C-200	18
2-3/16	065285	DU-C-203	087195	S1U-C-203	069063	B1U-C-203	17
2-1/4	065265	DU-C-204	087215	S1U-C-204	—	—	17
2-7/16	065286	DU-C-207	087196	S1U-C-207	069064	B1U-C-207	20
2-1/2	—	—	—	—	069039	B1U-C-208	35
2-11/16	065268	DU-C-211	087218	S1U-C-211	—	—	34
2-7/8	065270	DU-C-214	087220	S1U-C-214	—	—	34
2-15/16	065287	DU-C-215	087197	S1U-C-215	069065	B1U-C-215	34
3	065271	DU-C-300	087221	S1U-C-300	—	—	55
3-3/16	—	—	087222	S1U-C-303	069045	B1U-C-303	53
3-1/4	—	—	—	—	069046	B1U-C-304	53
3-7/16	065288	DU-C-307	087198	S1U-C-307	069066	B1U-C-307	51
3-1/2	065274	DU-C-308	087224	S1U-C-308	—	—	115
3-11/16	—	—	087225	S1U-C-311	—	—	115
3-15/16	065304	DU-C-315	087210	S1U-C-315	069067	B1U-C-315	115
4	—	—	—	—	069069	B1U-C-400	115
4-7/16	065305	DU-C-407	087211	S1U-C-407	—	—	138
4-15/16	065306	DU-C-415	087212	S1U-C-415	—	—	190

#Consult Dodge for sizes not listed.

Type C inner unit – inch

Shaft Size	A	B	C	D**	E	G Hex	H Hex	J	K	L	M	N	O**	P
1-7/16	4.50	2.69	0.75	3.875	3.81	7/16	5/8	3.13	4.062	3.09	2.69	2.50	4.438	3.94
1-1/2														
1-11/16	4.88	3.13	0.75	4.250	4.13	7/16	5/8	3.31	4.438	3.50	2.88	2.75	5.000	4.50
1-3/4														
1-15/16	5.25	3.25	0.88	4.750	4.50	7/16	5/8	3.56	4.812	3.88	3.06	2.88	5.312	4.75
2														
2-3/16	5.75	3.75	0.88	5.250	5.00	7/16	5/8	3.81	5.375	4.38	5.31	3.19	6.000	5.38
2-1/4														
2-7/16	6.00	4.00	1.00	5.750	5.31	5/8	5/8	4.06	5.687	4.66	3.80	4.09	6.375	5.69
2-1/2														
2-11/16	6.50	4.44	1.00	6.500	6.19	5/8	3/4	4.63	6.562	5.44	4.50	4.50	7.312	6.50
2-7/8														
2-15/16														
3														
3-3/16	7.00	5.00	1.25	7.750	7.50	5/8	3/4	5.25	8.000	5.94	4.88	5.56	8.625	7.91
3-1/4														
3-7/16														
3-1/2														
3-11/16	9.50	6.25	1.50	9.250	8.81	5/8	3/4	6.00	9.500	7.38	5.63	6.38	10.250	9.75
3-15/16														
4														
4-7/16	10.00	6.63	1.75	10.500	9.84	3/4	3/4	6.63	10.625	8.38	6.19	6.89	11.125	10.38
4-15/16	11.25	7.38	2.00	11.750	10.84	3/4	3/4	7.25	11.500	9.38	6.63	7.44	12.500	11.88

Note: All sizes use a 1/8 - 27 NPT hydraulic grease fitting.

Δ A one-piece collar furnished up through 2-7/16 sizes. Larger sizes use a two-piece collar.

** + .000 - .002

Type C take-up – inch

Narrow-slot (NS)

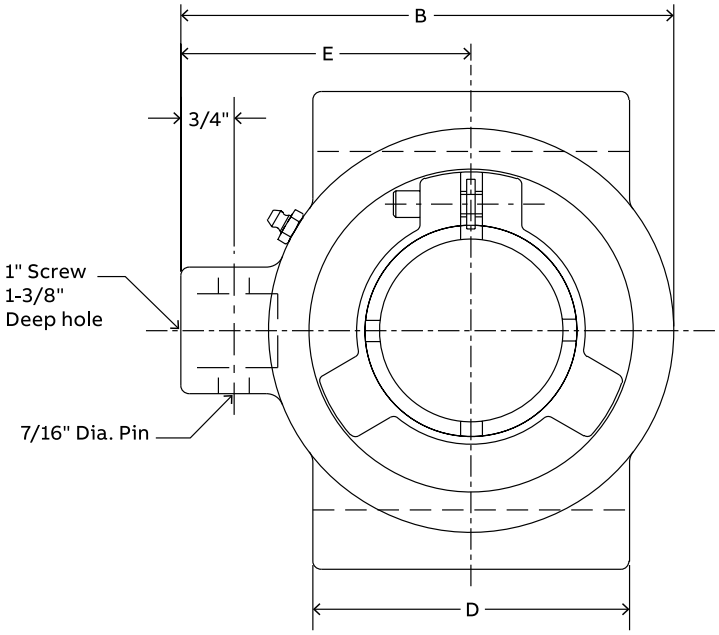

Note: All sizes use a 1/8 - 27 NPT hydraulic grease fitting

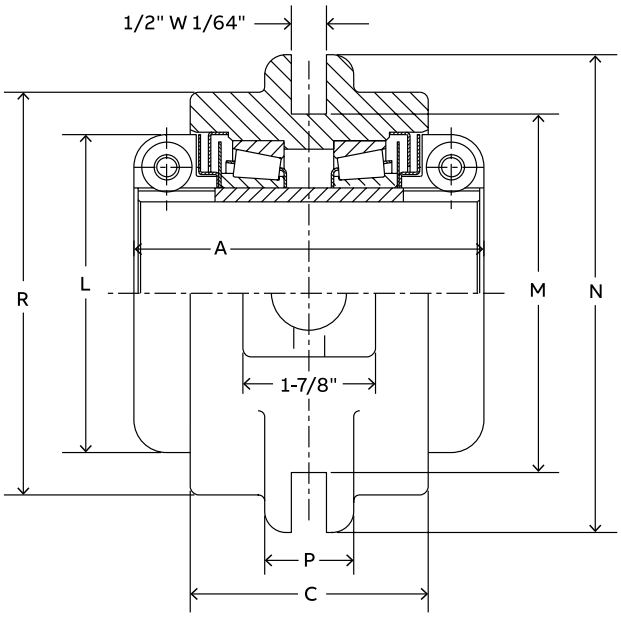

Type C take-up – inch

Narrow-slot (NS)

Gray iron

Shaft size	Part number	Description	Approx. weight (lbs)
1-7/16	036116	NSTU-C-107	12
1-1/2	036054	NSTU-C-108	15
1-15/16	036118	NSTU-C-115	18
2-3/16	036119	NSTU-C-203	26
2-7/16	036120	NSTU-C-207	27
2-15/16	036121	NSTU-C-215	37

Shaft size	A	B	C	D	E	L	M	N	P	R
1-7/16	4.50	5.63	2.69	2.50	3.63	3.08	5.13	6.25	1.25	4.00
1-1/2	4.88	5.88	3.13	3.00	3.63	3.50	5.13	6.25	1.25	4.25
1-15/16	5.25	6.00	3.25	3.50	3.63	3.88	5.13	6.25	1.25	4.75
2-3/16	5.75	7.00	3.75	4.50	4.63	4.38	5.13	6.25	1.25	5.75
2-7/16	6.00	7.00	4.00	4.50	4.63	4.66	5.13	6.25	1.25	5.75
2-15/16	6.50	7.75	4.44	5.00	4.50	5.44	6.13	7.25	1.25	6.50

Note: All sizes use a 1/8-27 NPT hydraulic grease fitting.

Type C hanger bearing – inch

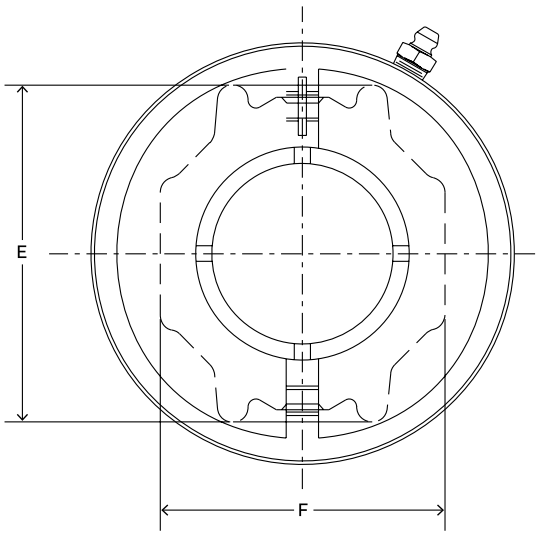

Note: All sizes use a 1/8 - 27 NPT hydraulic grease fitting

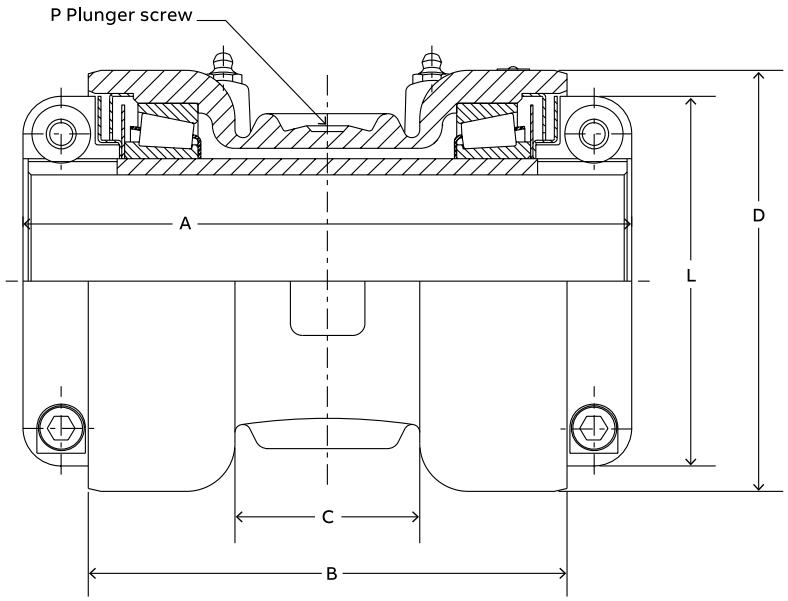

Type C hanger bearing – inch

Gray iron

Shaft size	Part number	Description	Approx. weight (lbs)
1-15/16	061082	HNG-C-115	16
2-3/16	061083	HNG-C-203	21
2-7/16	061084	HNG-C-207	30
2-11/16	061085	HNG-C-211	41
2-15/16	061086	HNG-C-215	40
3-7/16	061087	HNG-C-307	51

Shaft size	A	B	C	D	E	F	L	P
1-15/16	8.25	6.25	2.75	4.63	3.38	2.94	3.88	5/8, 1-1/2
2-3/16	8.88	6.88	3.00	5.13	3.75	3.31	4.38	5/8, 1-1/2
2-7/16	9.63	7.63	3.00	5.38	4.13	3.50	4.66	5/8, 1-1/2
2-11/16	10.38	8.25	3.25	6.25	4.63	4.00	5.44	3/4, 2
2-15/16								
3-7/16	11.25	9.25	4.00	6.75	5.13	4.50	5.94	3/4, 2-1/2

Note: All sizes use a 1/8-27 NPT hydraulic grease fitting.

Special Duty pillow block – inch

2-bolt

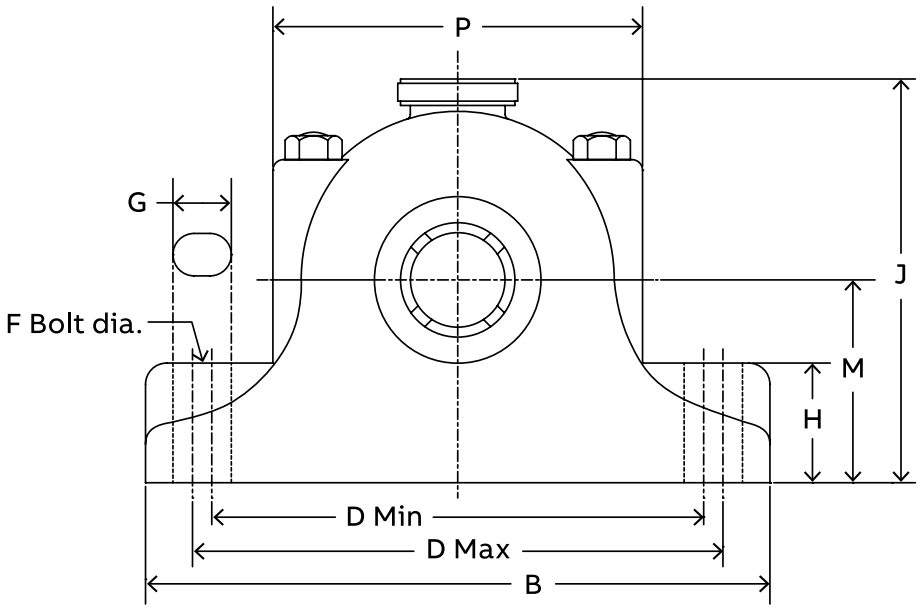

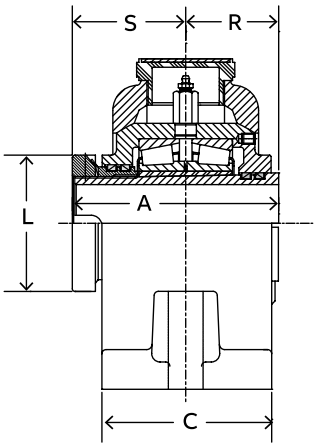

Non-Expansion construction

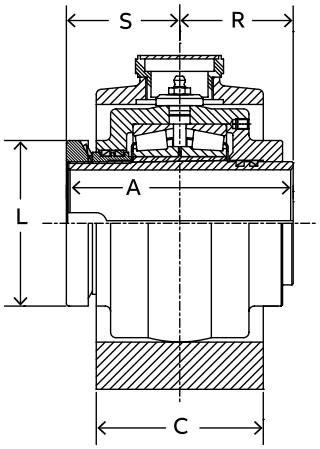

Expansion construction

Special Duty pillow block – inch

2-bolt

Gray iron – Non-expansion*

Shaft size	Part number	Description	Approx. weight (lbs)
1-3/8	066213	P2B-SD-106	20
1-7/16	066214	P2B-SD-107	20
1-1/2	066300	P2B-SD-108	20
1-9/16	066212	P2B-SD-109	27
1-5/8	066228	P2B-SD-110	27
1-11/16	066216	P2B-SD-111	27
1-3/4	066301	P2B-SD-112	27
1-7/8	066217	P2B-SD-114	33
1-15/16	066218	P2B-SD-115	32
2	066302	P2B-SD-200	32
2-1/8	066215	P2B-SD-202	48
2-3/16	066220	P2B-SD-203	47
2-1/4	066303	P2B-SD-204	47
2-7/16	066222	P2B-SD-207	56
2-1/2	066246	P2B-SD-208	56
2-5/8	066223	P2B-SD-210	84
2-11/16	066304	P2B-SD-211	84
2-3/4	066226	P2B-SD-212	84
2-15/16	066230	P2B-SD-215	82
3	066305	P2B-SD-300	82
3-3/16	066232	P2B-SD-303	120
3-3/8	066237	P2B-SD-306	119
3-7/16	066234	P2B-SD-307	118
3-1/2	066236	P2B-SD-308	118

Gray iron – Expansion

Shaft size	Part number	Description	Approx. weight (lbs)
1-3/8	066249	P2B-SD-106E	22
1-7/16	066250	P2B-SD-107E	22
1-1/2	066306	P2B-SD-108E	22
1-9/16	066248	P2B-SD-109E	28
1-5/8	066243	P2B-SD-110E	28
1-11/16	066252	P2B-SD-111E	28
1-3/4	066307	P2B-SD-112E	28
1-7/8	066253	P2B-SD-114E	33
1-15/16	066254	P2B-SD-115E	32
2	066308	P2B-SD-200E	32
2-1/8	066257	P2B-SD-202E	50
2-3/16	066256	P2B-SD-203E	49
2-1/4	066309	P2B-SD-204E	49
2-7/16	066258	P2B-SD-207E	60
2-1/2	066247	P2B-SD-208E	60
2-5/8	066262	P2B-SD-210E	80
2-11/16	066310	P2B-SD-211E	80
2-3/4	066263	P2B-SD-212E	80
2-15/16	066266	P2B-SD-215E	78
3	066311	P2B-SD-300E	78
3-3/16	066269	P2B-SD-303E	120
3-3/8	066271	P2B-SD-306E	119
3-7/16	066270	P2B-SD-307E	118
3-1/2	066273	P2B-SD-308E	118

* Furnished unless otherwise specified.

Shaft size	A	B	C	D		F bolt dia.	G	H	J	L	M	P	R	S	Exp*
				Min.	Max.										
1-3/8															
1-7/16	4.00	9.00	3.00	6.88	7.63	1/2	1.00	2.13	6.25	2.44	2.88	5.88	1.81	2.19	3/16
1-1/2															
1-9/16															
1-5/8	4.13	9.50	3.44	7.56	7.94	1/2	1.00	2.38	6.81	2.81	3.13	5.94	1.88	2.25	5/8
1-11/16															
1-3/4															
1-7/8															
1-15/16	4.25	11.00	3.50	8.25	9.25	5/8	1.25	2.50	7.13	3.06	3.25	7.25	1.94	2.31	5/8
2															
2-1/8															
2-3/16	4.56	12.00	4.00	9.13	10.38	5/8	1.25	2.88	8.00	3.44	3.75	7.25	2.06	2.50	5/8
2-1/4															
2-7/16	5.06	13.25	4.25	10.00	11.50	3/4	1.50	3.00	8.56	3.81	4.00	7.81	2.31	2.75	5/8
2-1/2															
2-5/8															
2-11/16															
2-3/4	5.75	14.25	4.75	11.00	12.50	3/4	1.50	3.75	9.88	4.44	4.75	8.69	2.63	3.13	3/4
2-15/16															
3															
3-3/16															
3-3/8	6.38	16.75	5.50	13.25	14.25	7/8	1.50	4.00	11.38	5.06	5.50	11.25	2.94	3.44	3/4
3-7/16															
3-1/2															

* Total expansion for expansion bearing only.

Special Duty pillow block – inch

4-bolt

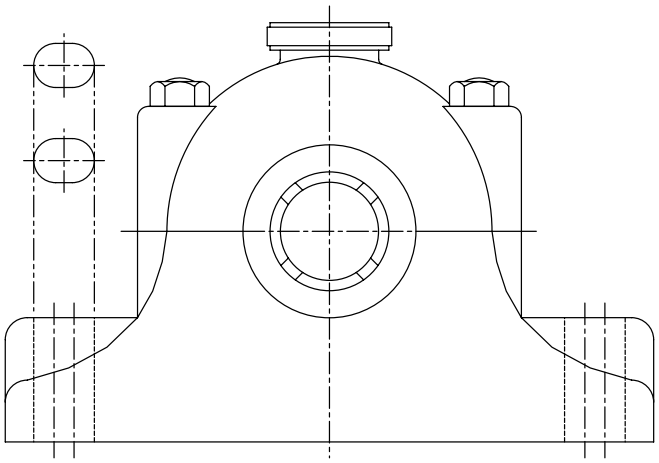

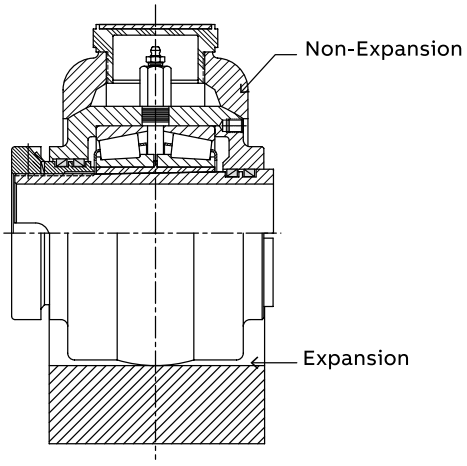

2-3/8" thru 3-1/2"
Construction

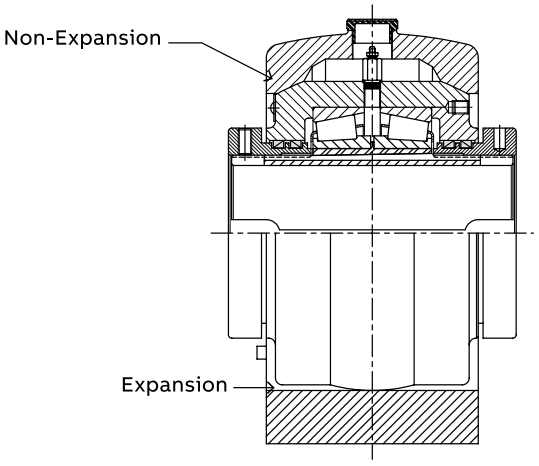

3-11/16" thru 6"
Construction

Special Duty pillow block – inch

4-bolt

Gray iron – Non-expansion *

Shaft size	Part number	Description	Approx. weight (lbs)
2-3/8	066360	P4B-SD-206	60
2-7/16	066224	P4B-SD-207	60
2-1/2	066244	P4B-SD-208	60
2-11/16	066225	P4B-SD-211	82
2-3/4	066363	P4B-SD-212	82
2-7/8	066365	P4B-SD-214	81
2-15/16	066231	P4B-SD-215	80
3	066366	P4B-SD-300	80
3-3/16	066367	P4B-SD-303	124
3-3/8	066370	P4B-SD-306	122
3-7/16	066235	P4B-SD-307	120
3-1/2	066371	P4B-SD-308	120
3-11/16	066372	P4B-SD-311	215
3-3/4	066373	P4B-SD-312	215
3-7/8	066374	P4B-SD-314	215
3-15/16	066238	P4B-SD-315	215
4	066375	P4B-SD-400	215
4-7/16	066240	P4B-SD-407	296
4-1/2	066377	P4B-SD-408	296
4-15/16	066242	P4B-SD-415	380
5	066378	P4B-SD-500	380
5-7/16	066379	P4B-SD-507	585
5-15/16	066381	P4B-SD-515	585
6	066382	P4B-SD-600	585

Gray iron – Expansion

Shaft size	Part number	Description	Approx. weight (lbs)
2-3/8	066400	P4B-SD-206E	60
2-7/16	066260	P4B-SD-207E	60
2-1/2	066245	P4B-SD-208E	60
2-11/16	066261	P4B-SD-211E	82
2-3/4	066403	P4B-SD-212E	82
2-7/8	066405	P4B-SD-214E	81
2-15/16	066268	P4B-SD-215E	80
3	066406	P4B-SD-300E	80
3-3/16	066407	P4B-SD-303E	124
3-3/8	066410	P4B-SD-306E	122
3-7/16	066272	P4B-SD-307E	120
3-1/2	066411	P4B-SD-308E	120
3-11/16	066412	P4B-SD-311E	230
3-3/4	066413	P4B-SD-312E	230
3-7/8	066414	P4B-SD-314E	230
3-15/16	066274	P4B-SD-315E	230
4	066415	P4B-SD-400E	230
4-7/16	066276	P4B-SD-407E	296
4-1/2	066417	P4B-SD-408E	296
4-15/16	066278	P4B-SD-415E	380
5	066418	P4B-SD-500E	380
5-7/16	066419	P4B-SD-507E	585
5-15/16	066421	P4B-SD-51SE	585
6	066422	P4B-SD-600E	585

* Furnished unless otherwise specified.

Note: When ordering sizes larger than 5", specify rpm.

All sizes use a 1/8 - 27 NPT hydraulic grease fitting.

Special Duty pillow block – inch

4-bolt

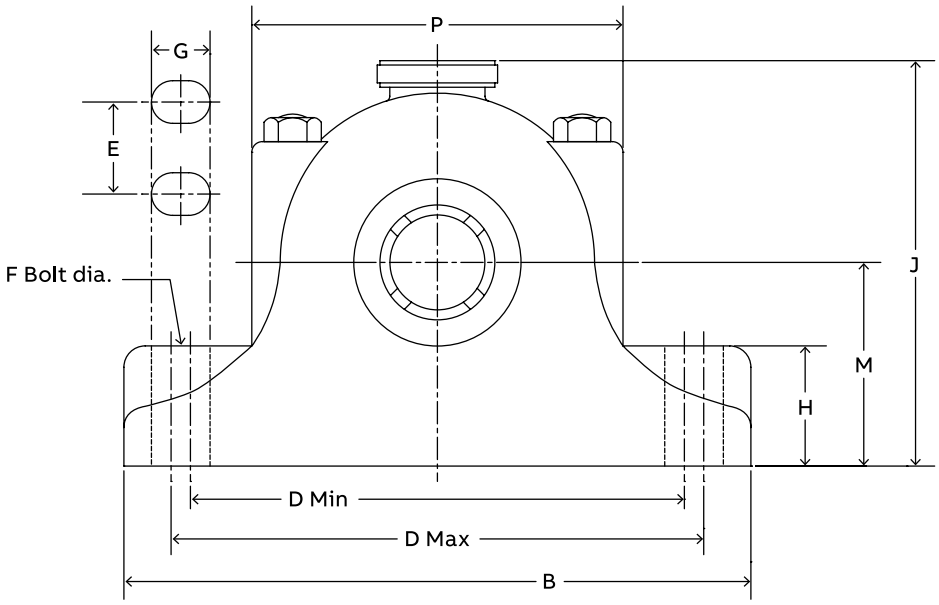

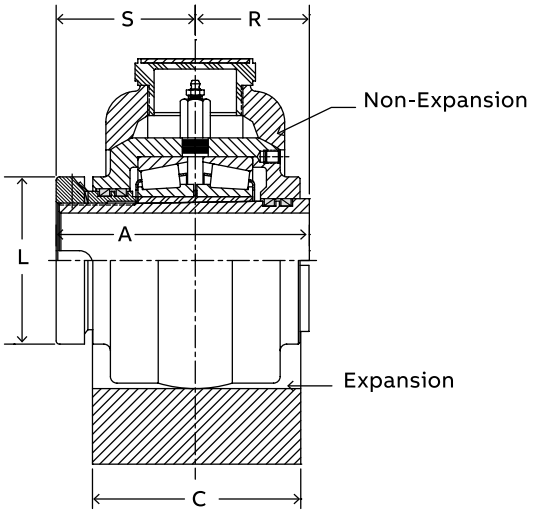

2-3/8" thru 3-1/2"
Construction

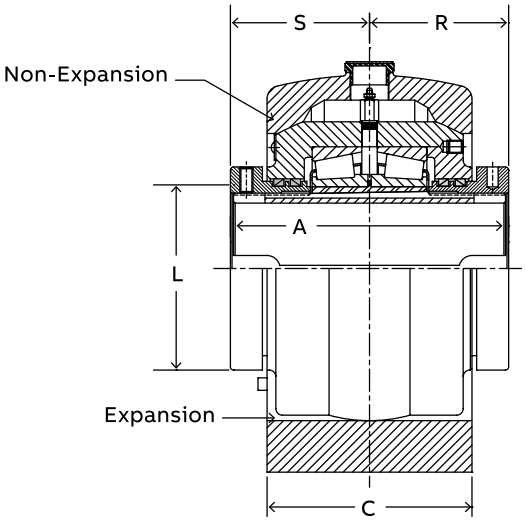

3-11/16" thru 6"
Construction

Special Duty pillow block – inch

4-bolt

Shaft size	A	B*	C*	D		E	F bolt dia.	G*	H*	J	L	M	P*	R	S	EXP**
				Min.	Max.											
2-3/8																
2-7/16	5.06	13.25	4.25	9.88	11.63	2.50	5/8	1.50	3.00	8.56	3.81	4.00	7.81	2.31	2.75	5/8
2-1/2																
2-11/16																
2-3/4																
2-7/8	5.75	14.25	4.75	10.88	12.63	2.75	5/8	1.50	3.75	9.88	4.44	4.75	8.69	2.63	3.13	5/8
2-15/16																
3																
3-3/16																
3-3/8																
3-7/16	6.38	16.75	5.50	13.00	14.50	3.25	3/4	1.50	4.00	11.38	5.06	5.50	10.25	2.94	3.44	3/4
3-1/2																
3-11/16																
3-3/4																
3-7/8	8.50	19.00	7.00	15.00	16.00	3.25	7/8	1.50	4.00	13.38	6.25	6.38	13.75	4.25	4.25	3/4
3-15/16																
4																
4-7/16	9.50	20.00	7.50	15.50	17.50	3.50	7/8	1.88	4.00	14.50	7.25	7.25	12.63	4.75	4.75	3/4
4-1/2																
4-15/16	10.50	23.00	8.25	17.75	19.75	3.75	1	2.13	4.25	15.68	8.00	7.50	16.50	5.25	5.25	3/4
5																
5-7/16																
5-15/16	12.00	26.75	9.25	21.38	23.63	5.00	1-1/8	2.25	5.00	19.00	9.50	9.00	17.38	6.00	6.00	3/4
6																

* These are as cast surfaces. Dimensions may fuctuate due to draft angles and pattern shifts.

** Total expansion for expansion bearing only.

Note: All sizes use a 1/8 - 27 NPT hydraulic grease fitting.

Special Duty flange – inch

4-bolt

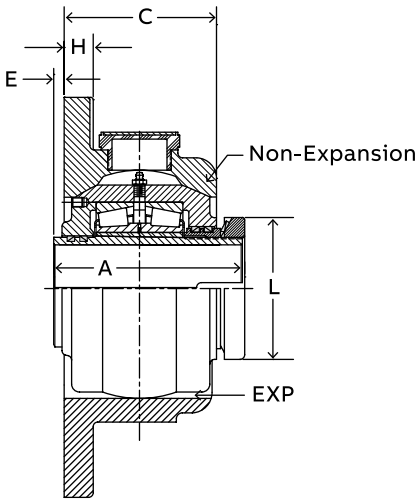

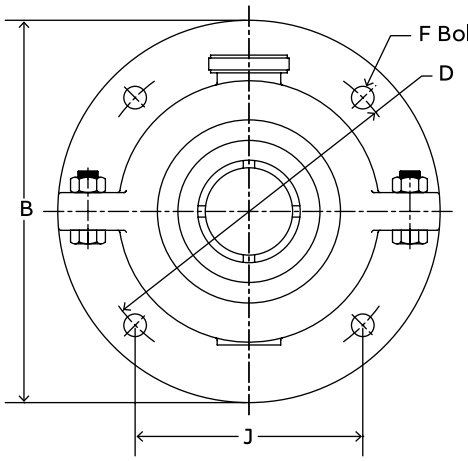

1-3/8" thru 3-1/2" Construction

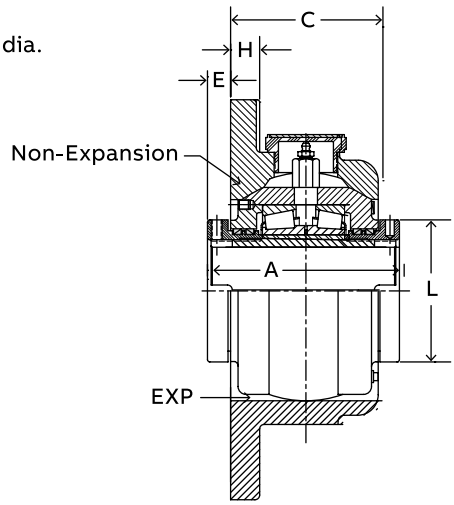

3-11/16" thru 6" Construction

Gray iron – Non-expansion *

Shaft size	Part number	Description	Approx. weight (lbs)
1-7/16	104020	F4B-SD-107	21
1-1/2	104161	F4B-SD-108	21
1-11/16	104021	F4B-SD-111	30
1-3/4	104162	F4B-SD-112	30
1-15/16	104022	F4B-SD-115	37
2	104164	F4B-SD-200	37
2-3/16	104023	F4B-SD-203	46
2-3/8	104169	F4B-SD-206	62
2-7/16	104024	F4B-SD-207	62
2-1/2	104170	F4B-SD-208	62
2-11/16	104172	F4B-SD-211	85
2-3/4	104173	F4B-SD-212	83
2-15/16	104025	F4B-SD-215	81
3	104176	F4B-SD-300	81
3-3/16	104177	F4B-SD-303	141
3-7/16	104026	F4B-SD-307	139
3-1/2	104181	F4B-SD-308	138
3-15/16	104027	F4B-SD-315	230
4	104010	F4B-SD-400	229
4-7/16	104028	F4B-SD-407	325
4-15/16	104029	F4B-SD-415	430
5	104013	F4B-SD-500	428
5-15/16	104016	F4B-SD-515	560
6	104018	F4B-SD-600	560

Gray iron – Expansion

Shaft size	Part number	Description	Approx. weight (lbs)
1-7/16	104030	F4B-SD-107E	22
1-1/2	104196	F4B-SD-108E	22
1-11/16	104031	F4B-SD-115E	30
1-3/4	104197	F4B-SD-112E	30
1-15/16	104032	F4B-SD-115E	37
2	104199	F4B-SD-200E	37
2-3/16	104033	F4B-SD-203E	49
2-3/8	104204	F4B-SD-206E	64
2-7/16	104034	F4B-SD-207E	64
2-1/2	104205	F4B-SD-208E	64
2-11/16	104207	F4B-SD-211E	88
2-3/4	104208	F4B-SD-212E	86
2-15/16	104035	F4B-SD-215E	85
3	104211	F4B-SD-300E	84
3-3/16	104212	F4B-SD-303E	145
3-7/16	104036	F4B-SD-307E	144
3-1/2	104216	F4B-SD-308E	143
3-15/16	104037	F4B-SD-315E	234
4	104003	F4B-SD-400E	234
4-7/16	104038	F4B-SD-407E	325
4-15/16	104039	F4B-SD-415E	430
5	104006	F4B-SD-500E	428
5-15/16	104017	F4B-SD-515E	560
6	104019	F4B-SD-600E	560

* Furnished unless otherwise specified.

Note: When ordering sizes larger than 5", specify rpm.

Special Duty flange – inch

4-bolt

Shaft size	A	B	C	D	E	F bolt dia.	H	J	L	EXP*
1-3/8 1-7/16 1-1/2	4.00	8.25	3.00	7.00	0.31	1/2	0.63	4.95	2.44	3/16
1-11/16 1-3/4	4.13	9.00	3.38	7.63	0.19	1/2	0.69	5.39	2.81	1/4
1-15/16 2	4.25	10.00	3.50	8.38	0.19	5/8	0.75	5.92	3.06	1/4
2-3/16	4.50	10.75	4.00	9.13	0.06	5/8	0.81	6.45	3.44	1/4
2-3/8 2-7/16 2-1/2	5.06	12.00	4.25	10.25	0.19	3/4	0.88	7.25	3.81	1/4
2-11/16 2-3/4 2-15/16 3	5.75	13.00	4.63	11.25	0.31	3/4	1.00	7.96	4.44	5/8
3-3/16 3-7/16 3-1/2	6.38	14.50	5.38	12.50	0.25	7/8	1.13	8.84	5.06	1/4
3-15/16 4	8.50	18.00	6.75	15.75	0.88	1	1.25	11.14	6.25	1/4
4-7/16	9.50	19.50	7.25	17.00	1.13	1-1/8	1.38	12.02	7.25	5/8
4-15/16 5	10.50	21.50	8.25	19.00	1.00	1-1/8	1.75	13.44	8.00	5/8
5-15/16 6	12.00	25.50	9.00	22.50	1.50	1-1/4	1.75	15.91	9.50	5/8

* Total expansion for expansion bearing only.

Special Duty inner unit – inch

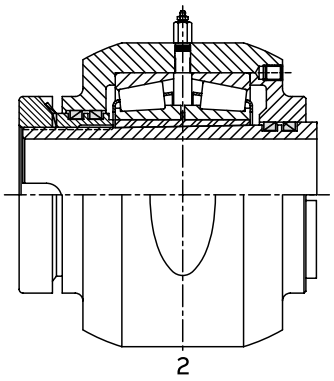

D Unit
1-3/8" thru 3-1/2" Construction

Non-Expansion
3-11/16" thru 6" not shown
Consult Dodge for detail

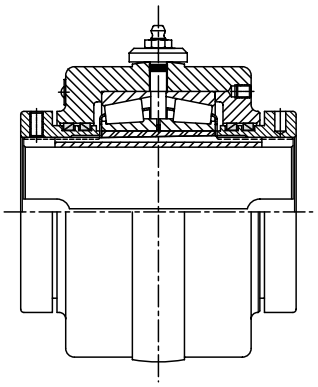

S-1 Unit
3-11/16" thru 6" Construction

Expansion
1-3/8" thru 3-1/2" and 6" not shown
Consult Dodge for detail

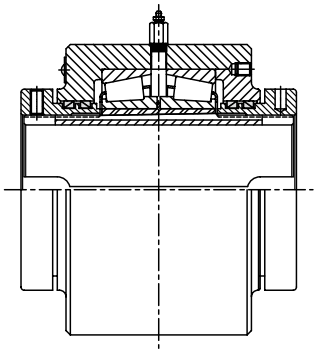

B-1 Unit
3-11/16" thru 6" Construction

Customer supplied housing only
1-3/8" thru 3-1/2" not shown
Consult Dodge for detail

Special Duty inner unit – inch

Shaft size	D units – Non-expansion		S-1 units – Expansion		B-1 units – Customer supplied housing		Approx. weight (lbs)
	Part number	Description	Part number	Description	Part number	Description	
1-3/8	066445	DU-SD-106	066500	S1U-SD-106	066560	B1U-SD-106	7
1-7/16	066280	DU-SD-107	066290	S1U-SD-107	066315	B1U-SD-107	7
1-1/2	066446	DU-SD-108	066501	S1U-SD-108	066561	B1U-SD-108	7
1-9/16	066444	DU-SD-109	066499	S1U-SD-109	066559	B1U-SD-109	10
1-5/8	066324	DU-SD-110	066312	S1U-SD-110	066314	B1U-SD-110	10
1-11/16	066281	DU-SD-111	066291	S1U-SD-111	066316	B1U-SD-111	10
1-3/4	066447	DU-SD-112	066502	S1U-SD-112	066562	B1U-SD-112	10
1-7/8	066448	DU-SD-114	066503	S1U-SD-114	066563	B1U-SD-114	12
1-15/16	066282	DU-SD-115	066292	S1U-SD-115	066317	B1U-SD-115	12
2	066464	DU-SD-200	066504	S1U-SD-200	066564	B1U-SD-200	12
2-1/8	066450	DU-SD-202	066506	S1U-SD-202	066566	B1U-SD-202	16
2-3/16	066283	DU-SD-203	066293	S1U-SD-203	066318	B1U-SD-203	16
2-1/4	066451	DU-SD-204	066507	S1U-SD-204	066567	B1U-SD-204	16
2-3/8	—	—	066509	S1U-SD-206	066569	B1U-SD-206	20
2-7/16	066284	DU-SD-207	066294	S1U-SD-207	066319	B1U-SD-207	20
2-1/2	066285	DU-SD-208	066510	S1U-SD-208	066570	B1U-SD-208	20
2-5/8	066455	DU-SD-210	066511	S1U-SD-210	066571	B1U-SD-210	29
2-11/16	066279	DU-SD-211	066326	S1U-SD-211	066572	B1U-SD-211	29
2-3/4	066456	DU-SD-212	066512	S1U-SD-212	066573	B1U-SD-212	29
2-13/16	066457	DU-SD-213	066513	S1U-SD-213	066574	B1U-SD-213	29
2-7/8	066458	DU-SD-214	066514	S1U-SD-214	066575	B1U-SD-214	29
2-15/16	066286	DU-SD-215	066295	S1U-SD-215	066320	B1U-SD-215	29
3	066459	DU-SD-300	066515	S1U-SD-300	066576	B1U-SD-300	29
3-3/16	066460	DU-SD-303	066516	S1U-SD-303	066577	B1U-SD-303	47
3-1/4	066461	DU-SD-304	066517	S1U-SD-304	066578	B1U-SD-304	47
3-3/8	066463	DU-SD-306	066519	S1U-SD-306	066580	B1U-SD-306	47
3-7/16	066287	DU-SD-307	066296	S1U-SD-307	066321	B1U-SD-307	47
3-1/2	066465	DU-SD-308	066520	S1U-SD-308	066581	B1U-SD-308	47
3-11/16	066466	DU-SD-311	066521	S1U-SD-311	066582	B1U-SD-311	94
3-3/4	066467	DU-SD-312	066522	S1U-SD-312	066583	B1U-SD-312	94
3-7/8	066468	DU-SD-314	066523	S1U-SD-314	066584	B1U-SD-314	94
3-15/16	066288	DU-SD-315	066297	S1U-SD-315	066322	B1U-SD-315	94
4	066469	DU-SD-400	066524	S1U-SD-400	066585	B1U-SD-400	94
4-7/16	066289	DU-SD-407	066298	S1U-SD-407	066587	B1U-SD-407	116
4-1/2	066471	DU-SD-408	066526	S1U-SD-408	066588	B1U-SD-408	116
4-15/16	066325	DU-SD-415	066299	S1U-SD-415	066589	B1U-SD-415	175
5	066472	DU-SD-500	066527	S1U-SD-500	066590	B1U-SD-500	175
5-7/16	066473	DU-SD-507	066528	S1U-SD-507	066591	B1U-SD-507	300
5-15/16	066475	DU-SD-515	066530	S1U-SD-515	066593	B1U-SD-515	300
6	066476	DU-SD-600	066531	S1U-SD-600	066594	B1U-SD-600	300

Note: When ordering sizes larger than 5", specify rpm.

Special Duty inner unit – inch

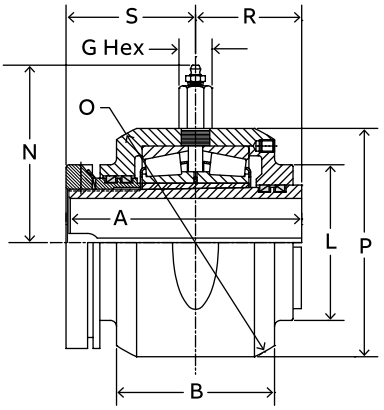

1-3/8" - 3-1/2"

D-Unit

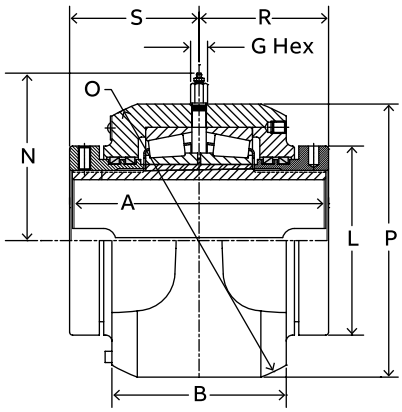

3-11/16" - 6"

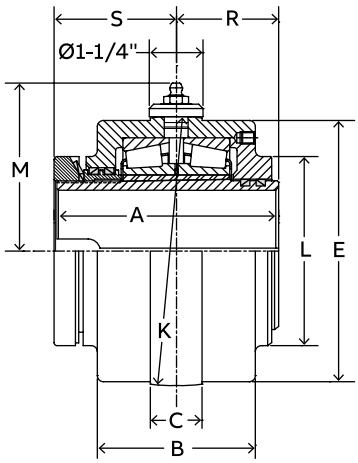

1-3/8" - 3-1/2"

S1-Unit

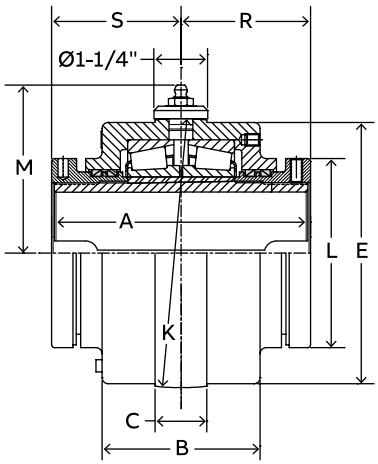

3-11/16" - 6"

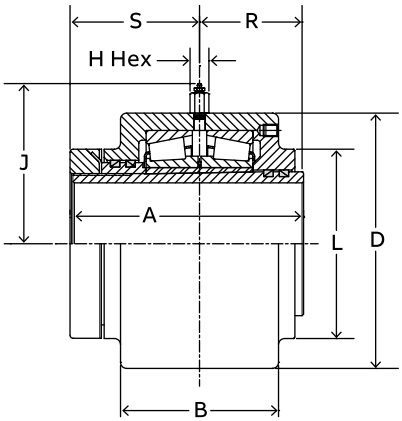

1-3/8" - 3-1/2"

B1-Unit

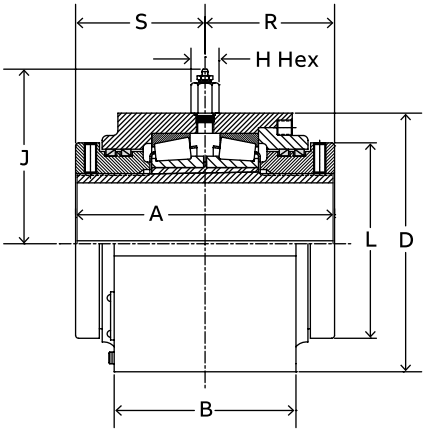

3-11/16" - 6"

Special Duty inner unit – inch

Shaft size	A	B	C	D	E	F	G Hex	H Hex	J	K	L	M	N	O	P	R	S
1-3/8 1-7/16 1-1/2	4.00	2.69	0.75	3.875 ★	3.75	—	7/16	5/8	3.06	4.062 ★	2.44	2.69	2.50	4.438 ★	3.94	1.81	2.19
1-9/16 1-5/8 1-11/16 1-3/4	4.13	3.13	0.75	4.250 ★	4.13	—	7/16	5/8	4.25	4.438 ★	2.81	2.88	2.75	5.000 ★	4.50	1.88	2.25
1-7/8 1-15/16 2	4.25	3.25	0.88	4.750 ★	4.50	—	5/8	5/8	4.75	4.812 ★	3.06	3.06	2.88	5.313 ★	4.75	1.94	2.31
2-1/8 2-3/16 2-1/4	4.56	3.50	0.88	5.250 ★	5.06	—	5/8	5/8	5.25	5.375 ★	3.44	3.31	3.19	6.000 ★	5.38	2.06	2.50
2-3/8 2-7/16 2-1/2	5.06	4.00	1.00	5.750 ★	5.31	—	3/4	5/8	5.75	5.687 ★	3.81	3.50	4.09	6.375 ★	5.69	2.31	2.75
2-5/8 2-11/16 2-3/4 2-13/16 2-7/8 2-15/16 3	5.75	4.44	1.00	6.500 ★	6.19	—	3/4	3/4	6.50	6.562 ★	4.44	4.19	4.50	7.313 ★	6.50	2.63	3.13
3-3/16 3-1/4 3-3/8 3-7/16 3-1/2	6.38	5.00	1.25	7.750 ★	7-5/8	—	3/4	3/4	5.38	8.000 ●	5.06	4.88	5.56	8.625 ♦	8.00	2.94	3.44
3-11/16 3-3/4 3-7/8 3-15/16 4	8.50	6.25	1.50	9.250 ★	9.00	—	3/4	3/4	6.13	9.500 ●	6.25	5.63	6.38	10.250 ♦	9.75	4.25	4.25
4-7/16 4-1/2	9.50	6.63	1.75	10.500 ★	10-1/16	—	3/4	3/4	6.75	10.625 ●	7.25	6.19	6.69	11.125 ♦	10.06	4.75	4.75
4-15/16 5	10.50	7.38	2.00	11.750 ★	10-7/8	—	3/4	3/4	7.38	11.500 ●	8.00	6.63	7.44	12.500 ♦	11.88	5.25	5.25
5-7/16 5-15/16 6	12.00	8.50	2.25	13.500 ★	13.00	—	3/4	3/4	8.25	14.000 ●	9.50	7.88	8.56	14.750 ❖	14.13	6.00	6.00

★ .000 to +.002”
♦ .000 to +.003”
● .000 to -.004”
❖ .000 to +.004”

Special Duty hinged cap pillow block – inch

2-bolt

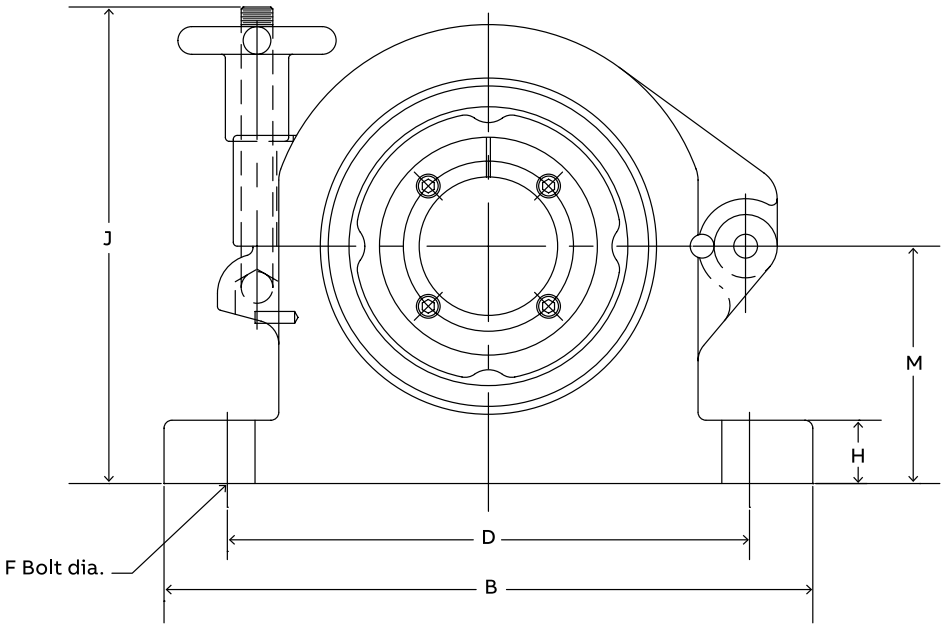

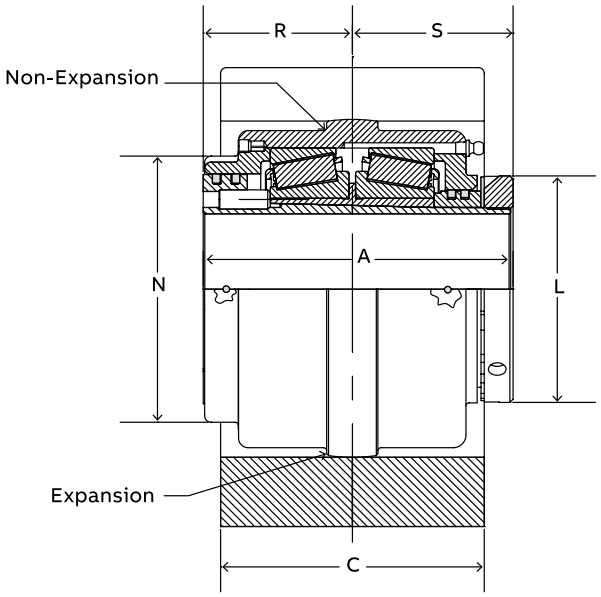

Special Duty hinged cap pillow block – inch

2-bolt

Pillow block assembly – Non-expansion *

Shaft size	Part number	Description	Approx. weight (lbs)
1-3/8	067054	P2B-HC-106	20
1-7/16	067050	P2B-HC-107	20
1-1/2	067056	P2B-HC-108	20
1-11/16	067048	P2B-HC-111	27
1-3/4	067042	P2B-HC-112	27
1-15/16	067052	P2B-HC-115	36
2	067060	P2B-HC-200	36
2-3/16	067046	P2B-HC-203	47
2-7/16	067044	P2B-HC-207	60
2-15/16	067072	P2B-HC-215	60
3	067070	P2B-HC-300	60

* Furnished unless otherwise specified.

Pillow block assembly – Expansion

Shaft size	Part number	Description	Approx. weight (lbs)
1-3/8	067055	P2B-HC-106E	20
1-7/16	067051	P2B-HC-107E	20
1-1/2	067057	P2B-HC-108E	20
1-11/16	067049	P2B-HC-111E	27
1-3/4	067043	P2B-HC-112E	27
1-15/16	067053	P2B-HC-115E	36
2	067061	P2B-HC-200E	36
2-3/16	067047	P2B-HC-203E	47
2-7/16	067045	P2B-HC-207E	60
2-15/16	067073	P2B-HC-215E	60
3	067071	P2B-HC-300E	60

Pillow block housing only – Non-expansion *

Shaft size range symbol #	Part number	Description	Approx. weight (lbs)
106 to 108	067007 *	HS2-HC-406	13
111 to 112	067100 *	HS2-HC-444	16
115 to 200	067031 *	HS2-HC-481	23
203	067120 *	HS2-HC-538	26
207	067135 *	HS2-HC-569	40
215 to 300	067078 *	HS2-HC-656	52

* Furnished unless otherwise specified.

Pillow block housing only – Expansion

Shaft size range symbol #	Part number	Description	Approx. weight (lbs)
106 to 108	067016	HS2-HC-406E	13
111 to 112	067103	HS2-HC-444E	16
115 to 200	067034	HS2-HC-481E	23
203	067123	HS2-HC-538E	26
207	067138	HS2-HC-569E	40
215 to 300	067075	HS2-HC-656E	52

Shaft size	A	B	C	D	F bolt dia.	H	J	L	M	N	R	S
1-3/8												
1-7/16	4.13	7.25	3.00	5.88	1/2	0.75	6.88	2.44	2.88	3.25	1.94	2.19
1-1/2												
1-11/16												
1-3/4	4.25	8.25	3.25	6.88	1/2	0.75	6.88	2.81	3.13	3.53	2.00	2.25
1-15/16												
2	4.44	9.25	3.50	7.69	5/8	0.88	7.63	3.06	3.25	3.81	2.13	2.31
2-3/16	4.75	10.25	4.00	8.25	3/4	1.00	7.63	3.44	3.75	4.22	2.25	2.50
2-7/16	5.53	10.25	4.25	8.25	3/4	1.00	9.63	3.81	4.50	4.63	2.56	2.75
2-15/16												
3	6.06	11.13	4.75	9.13	3/4	1.25	10.13	4.44	5.00	5.25	2.94	3.13

Special Duty hinged cap S-1 inner unit – inch

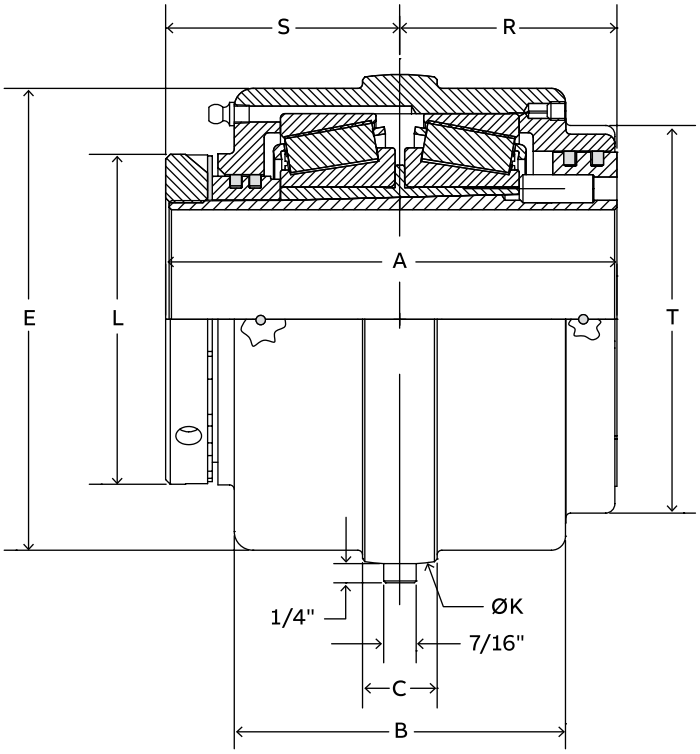

Hinged cap S-1 unit

Shaft size	Part number	Description	Approx. weight (lbs)	A	B	C	E	K	L	R	S	T
1-3/8	067149	S1U406-HC-106	8									
1-7/16	067151	S1U406-HC-107	8	4.13	2.69	0.75	3.75	4.06	2.44	1.94	2.19	3.25
1-1/2	067152	S1U406-HC-108	8									
1-11/16	067153	S1U444-HC-111	10									
1-3/4	067154	S1U444-HC-112	10	4.25	3.13	0.75	4.13	4.44	2.81	2.00	2.25	3.53
1-15/16	067155	S1U481-HC-115	11									
2	067156	S1U481-HC-200	11	4.44	3.25	0.88	4.50	4.81	3.06	2.13	2.31	3.81
2-3/16	067157	S1U538-HC-203	16	4.75	3.50	0.88	5.06	5.38	3.44	2.25	2.50	4.22
2-7/16	067159	S1U569-HC-207	19	5.31	4.00	1.00	5.31	5.69	3.81	2.56	2.75	4.63
2-15/16	067164	S1U656-HC-215	30									
3	067165	S1U656-HC-300	30	6.06	4.44	1.00	6.19	6.56	4.44	2.94	3.13	5.25

Special Duty traction wheel hub assembly – inch

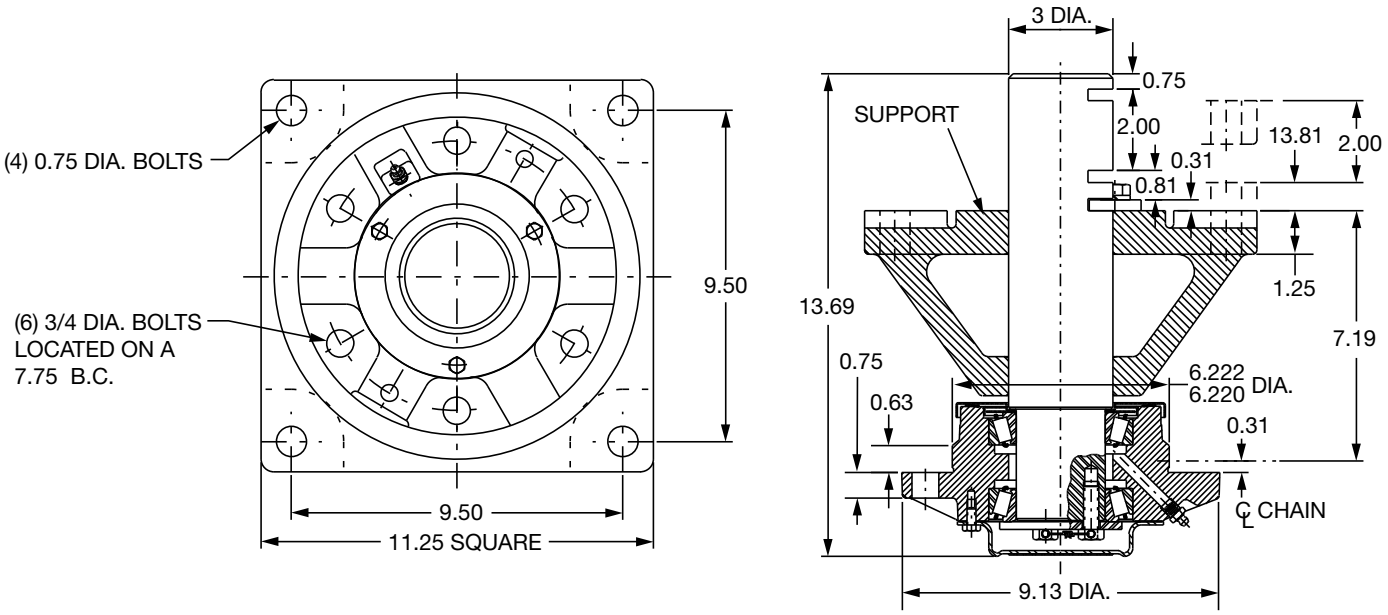

Traction wheel hub assemblies are constructed to operate with wheels (sprockets) ranging from two to six feet in diameter. Commonly used in overhead chain conveyors, the units bolt directly to the supporting structure and can be adjusted vertically to three different operating positions.

The hub utilizes combination seals to protect the tapered roller bearings from dust and dirt and retain lubricant.

Traction wheel hub assembly

Size	Part number	Part name	Approx. weight (lbs)
70	062040	TRW-70	100
70LS*	422604	TRW-70LS	80

Recommended for conveyors with chain nos.	Operating characteristics		
	rpm	Max. resultant load (lbs) ▲	L_{10} hours life
348	10	3600	★
458	10	8000	

▲ Based on 180- chain wrap

★ More than 100,000 hours life

* (LS) Less support - support for mounting to structure not included with this part

Notes

Safety Mount family (spherical)

B22-1	**Safety Mount family (spherical)**
B22-2	**Features and benefits**
B22-7	**Specification**
B22-8	**How to order**
B22-8	**Nomenclature**
B22-10	**Selection**
B22-24	**Dimensions**
B22-24	IP
B22-24	Pillow block
B22-40	Round flange
B22-42	Square flange
B22-50	Piloted flange
B22-60	Narrow piloted flange
B22-62	Wide-slot take-up
B22-66	Insert
B22-68	ISAF
B22-68	Pillow block
B22-72	ISN
B22-72	Plummer block
B22-74	Insert
B22-76	**Accessories**

Features and benefits

Safety Mount family

Overview

Features overview

- Tapered adapter sleeve uniformly grips the shaft for minimized shaft damage
- Integrated push-pull adapter mounting system enables easy, consistent installation and removal
- Unitized, replaceable insert allows a total of two degrees static or dynamic misalignment
- Inch- and metric-dimensioned bore sizes allows seamless integration with existing equipment design
- Innovative lock plate technology enables 360-degree mounting options and eliminates hammering for a safer, more efficient installation
- Factory-assembled, adjusted, and pre-lubricated to be shaft-ready out of the box
- Built-in expansion and non-expansion capability for installation flexibility and streamlined inventory management
- Heavy-duty housing material ensures superior durability in demanding environments
- Mechanically-retained triple-lip sealing system prevents seal blowout and allows efficient purging for maximum protection against contamination
- Sensor-ready for remote condition monitoring
- Intelli-Lube compatible for effortless replacement of manual lubrication
- Manufactured in the USA for superior quality and unrivaled lead times





Expansion vs. non-expansion

- Field-convertible
- Built-in snap or stabilization ring allows conversion on-site
- Setting determined by position of ring in housing bore
- Part numbers available for ordering either configuration

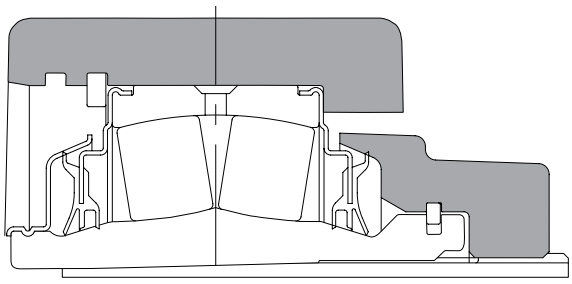

Safety Mount family

Overview

Tapered adapter sleeve

Safety Mount bearings feature a tapered adapter sleeve, engineered to conform precisely and uniformly to the shaft for reduced fretting corrosion, superior shaft protection, and simplified installation. The unique design minimizes installation force requirements and eliminates the need for excessive blows of a hammer, significantly reducing the risk of shaft movement and damage while enabling a faster, safer, and more efficient mounting process. The family is compatible with commercial shafting—providing significantly reduced lead times and cost savings compared to solutions with one-piece inner rings requiring turned, ground, and polished shafting with tight tolerances. The Safety Mount family allows easy integration into existing equipment design for a solution across a wide range of applications.

Superior sealing systems for extended life

An ineffective seal allows contaminants to enter a bearing, destroying the rolling elements and leading to premature failure. Since the launch of our first spherical roller bearing over 100 years ago, Dodge engineering has prioritized effective seal design. All Safety Mount family bearings feature an advanced, mechanically-retained triple-lip sealing system designed to prevent seal blowout and allow for effective purging—eliminating failure modes common to shaft-mounted seals in standard SAF-style bearings and maximizing protection against contamination.

A corrosion-resistant flinger acts as the first line of defense from contaminants. The Trident triple-lip seal provides critical protection in dirty environments, low-to-medium speeds, and typical ambient temperatures. Mechanically-retained and made of nitrile material, the triple-lip rubbing seal has a low coefficient of friction with a tapered seal landing that maintains full contact even when misaligned—providing superior protection against contamination. For high speeds and harsh ambient conditions, the Labyrinth seal provides a non-contact solution using clearance steel seal carriers.

Trident seals

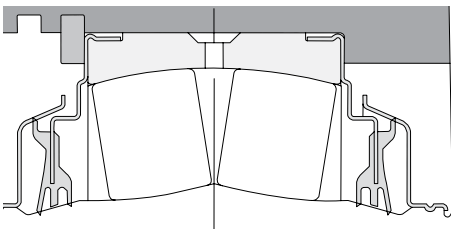

Labyrinth seals

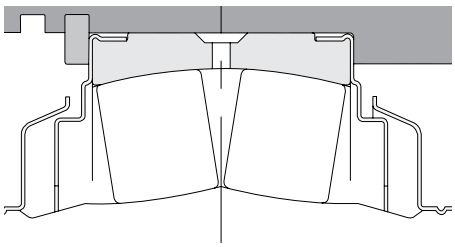

Safety Mount family

IP, ISAF, ISN

Patented bearing inserts

1-1/8 to 10-1/2 inch (30 mm to 170 mm) bore

Safety Mount bearings up to 10.5 inch bore size utilize a patented insert featuring a thin-walled tapered adapter that forms to the shaft without causing damage and uniformly grips the shaft for maximum holding power. Its innovative design allows the proper clearance to be set by turning the lock nut a predefined distance past the zero-reference point, ensuring a consistent and streamlined installation without the blows of a hammer.

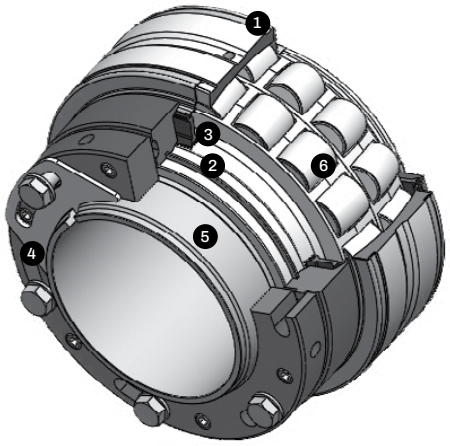

01 Corrosion-resistant flinger blocks and repels contaminants

02 Tapered seal landing maintains full seal contact when misaligned

03 Patented nitrile multiple-lip seal resists heat and chemical breakdown

04 Simple mounting and dismounting achieved through patented adapter system

05 Thin-walled tapered adapter sleeve improves concentricity, reduces inherent vibrations, and virtually eliminates fretting corrosion

06 Steel cage rides on the outer ring, minimizing friction and providing precision roller guidance for optimized lubrication

07 Extended inner ring maximizes area of contact for superior axial holding power

Patented lock plate design

1-1/8 to 10-1/2 inch bore

Safety Mount bearings up to 10.5 inch bore size feature a patented lock plate design that eliminates precise alignment requirements for securement with fewer tools, maximizing reliability. The innovative lock plate technology enables 360-degree mounting options—removing traditional alignment constraints for superior installation efficiency compared to the competition. The tightening of bolts with a common wrench replaces dangerous blows of a hammer for reduced risk and the reusable design optimizes efficiency by eliminating the destructive removal process required by competitive-style SAF lock washers.

End covers for increased on-site safety

1-1/8 to 10-1/2 inch bore

- Corrosion-resistant end covers protect workers from rotating shafts
- Easily installed on-site
- Open and closed options



Safety Mount family

IP, ISAF, ISN

Patented push-pull adapter mounting system
1-1/8 to 10-1/2 inch bore

- Clockwise rotation of the lock nut pushes the tapered adapter sleeve between the shaft and bearing inner race, allowing quick metal-to-metal contact during initial installation
- Lock nut is further rotated for a pre-determined number of turns, properly reducing bearing clearance and creating industry-standard shaft-to-bearing clamp load to prevent relative movement on shaft during operation. The Safety Mount design uses mounting bolts on the face of the patented split lock nut to create the precise amount of radial clearance reduction—no feeler gauges are used.
- Lock plate keeps lock nut tight for dependable shaft attachment
- Integral lock nut inner race design allows efficient removal of the sleeve from the bearing assembly via counterclockwise rotation of the lock nut. The Safety Mount design relies on dismounting screws located on the face of the lock nut, which safely pushes the bearing off the adapter sleeve.

ISN plummer blocks for easy interchangeability with SN units
30 to 170 mm

The Safety Mount ISN mounted spherical roller bearing provides all the advantages of the Safety Mount family with the dimensions of SN units for easy interchangeability in existing equipment design.

Dimensionally interchangeable with housings of the SN family

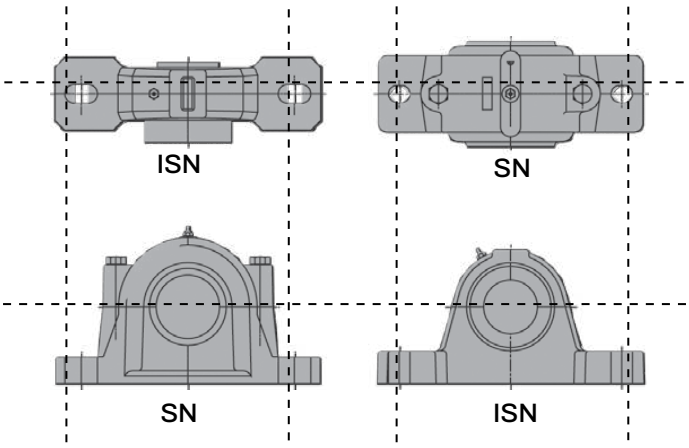

Stronger feet for higher load capacity

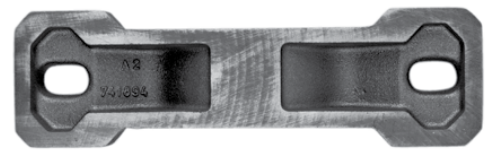

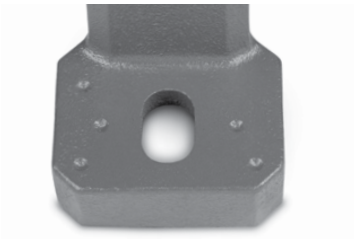

Safety Mount family

Configuration options

Available in unitized and split-housed designs, as well as steel, E-dimensioned, SAF-dimensioned, and metric-dimensioned units, Safety Mount bearings offer a solution for every application.

	IP	IP-HD	IP-E	IP-HD-E	ISAF	ISN
Dimensional standard	**Inch**	**Inch**	**E-dimensioned**	**E-dimensioned**	**SAF-dimensioned**	**Metric**
Housing material	**Cast iron**	**Steel**	**Cast iron**	**Steel**	**Cast iron**	**Cast iron**
Housing style	**Solid**	**Solid**	**Solid**	**Solid**	**Split**	**Solid**
2-bolt pillow block	1-1/8”—4”	1-1/8”—4”	1-3/8”—3-1/2”	1-3/8”—3-1/2”	1-7/16”—3-7/16”	30 mm—140 mm
4-bolt pillow block	2-3/8”—5”	2-3/8”—5”	2-1/4”—7”	2-1/4”—5”	2-7/16”— 10-1/2”	150 mm—170 mm
3- and 4-bolt round flange	1-1/8”—3”	—	—	—	—	—
4-bolt square flange	1-1/8”—4”	1-1/8”—4”	1-3/8”—4-1/2”	1-3/8”—4-1/2”	—	—
Piloted flange	1-1/8”—5”	1-1/8”—5”	1-3/8”—5”	—	—	—
Narrow piloted flange	—	1-7/16”—4-1/2”	—	—	—	—
Wide-slot take-up	1-1/8”—5”	—	1-1/8”—5-15/16”	—	—	—
Inserts	1-1/8—5”	1-1/8”—5”	1-1/8”—7”	1-3/8”—5”	1-7/16”—10-1/2”	30 mm—170 mm

Specification

Safety Mount family

Safety Mount family mounted spherical roller bearings, are general-purpose, high-capacity, double-row spherical roller bearings. All Safety Mount family bearings are mounted in single-piece, precision-machined housings. Bearings are mounted to shafts by means of a patented adapter system that improves concentricity and reduces inherent vibration. Housings are available in a variety of standard configurations, including pillow blocks, flanges, piloted flanges and take-up bearings.

Safety Mount HD housings are made of high-performance steel is the standard material used in Safety Mount HD housings. Steel housings are designed for performance in extremely harsh environments through the use of special finishes and stainless hardware.

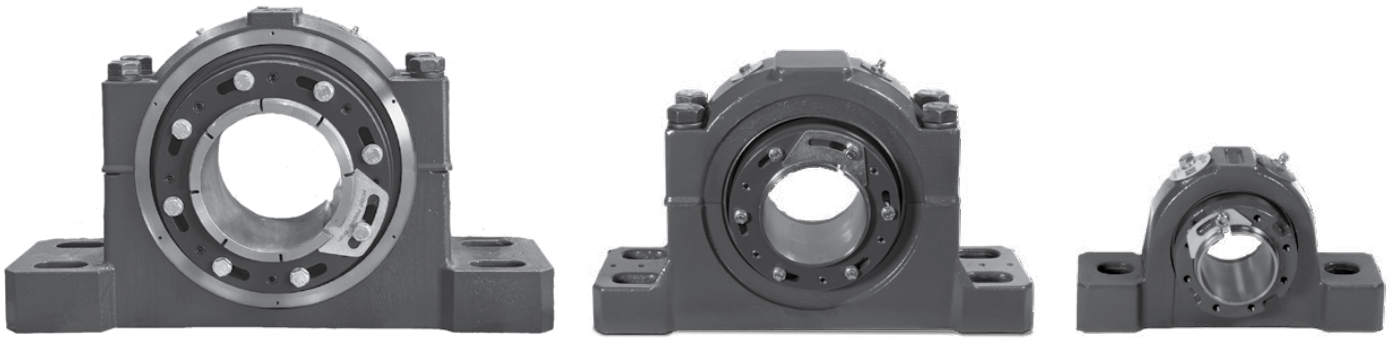

How to order

Safety Mount family

There are two ways to specify Dodge bearings—by six-digit part number or by description. Most of the products offered have part numbers with listings shown throughout this catalog. Use of part numbers ensures accurate order processing.

When part numbers are not shown, the product may be specified by description. This method is used when ordering units that include modifications or options. To order by description, use the nomenclature key shown for each product, adding any special instructions to the end of the description for options not covered by the nomenclature.

Special bearing requirements

Depending on the bearing, a wide variety of lubricants, seals, locking devices, finishes, and adjustments are available for a wide range of applications from general purpose to extreme ambient temperatures, high speeds, or high loads.

Special lubricant options usually involve set-up charges, minimum quantities, and price premiums. To order, specify the type of lubricant required at the end of the product name or after the standard part number.

Example:

F4B-XX-207 except with Mobil HTS #2 grease

or

P/N-XXXXXX except with Mobil HTS #2 grease

Other special requirements not listed

For applications requiring modifications not listed, contact Application Engineering for bearings at +1 864 284 5700.

Nomenclature

IP

S E P2B – IP – 207 R E

S
Prefix denotes steel housing "HD" series

E
Prefix denotes Type E

Housing style
- P2B = Pillow block 2-bolt
- P4B = Pillow block 4-bolt
- F3R = Flange bearing 3-bolt, cast iron, round
- F4R = Flange bearing 4-bolt, cast iron, round
- F4S = Flange bearing 4-bolt, cast iron, square
- FC = Piloted flanged (Flanged cartridge)
- FCN = Narrow piloted flange
- WSTU = Wide-slot take-up bearing for use in center pull frame

Bearing type
IP = Safety Mount IP

Size
Inches and 16th
2 = 2"

07 = 7/16"
or
207 = 2-7/16"

Seal
- R = Trident triple-lip rubbing seal
- L = Labyrinth metallic seal

Other data
E = Expansion

Safety Mount family

ISAF

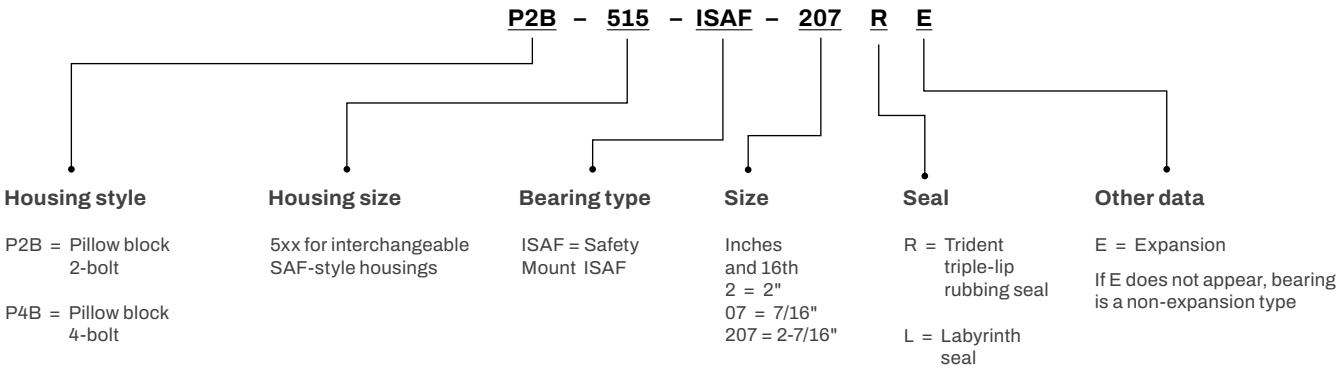

ISN

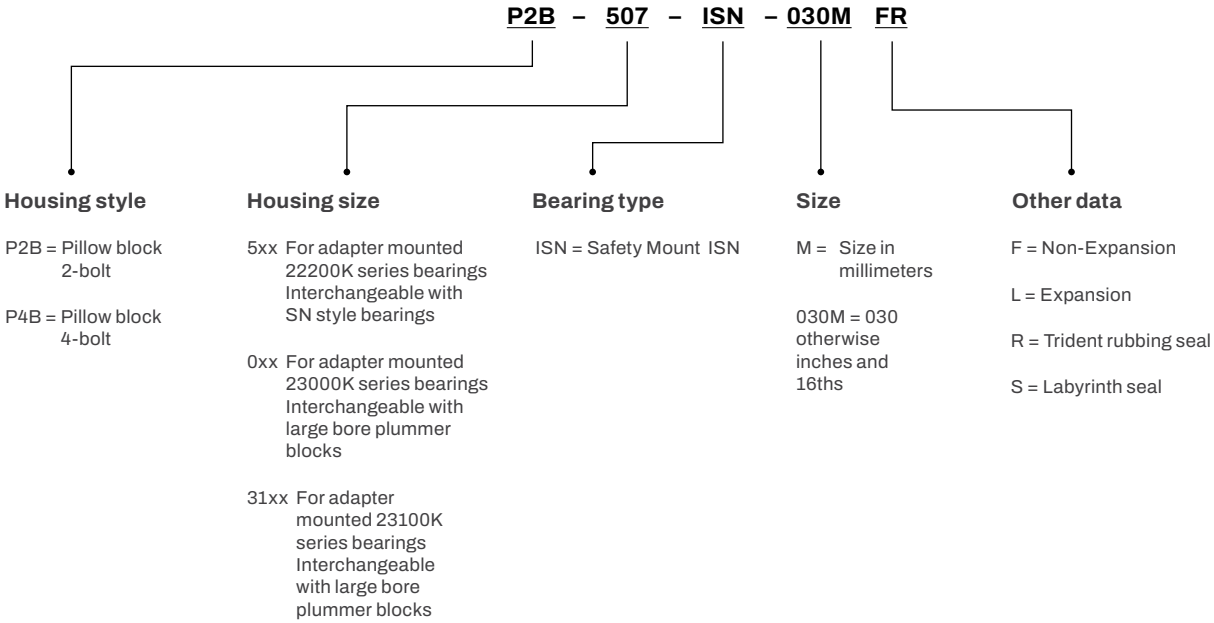

Selection

Safety Mount family

IP, ISAF, ISN

Safety Mount family spherical roller bearings have the capacity to carry heavy radial loads and combined radial and thrust loads. The maximum recommended load which can be applied is limited by various components in the system such as bearing, housing, shaft, shaft attachment, speed and life requirements as listed in this catalog. Dodge spherical roller bearings have been applied successfully even when these limits have been exceeded under controlled operating conditions. Contact Application Engineering at +1 864-284-5700 for applications which exceed the recommendations of this catalog.

L_{10} hours life – The life which may be expected from at least 90 percent of a given group of bearings operating under identical conditions.

$$L_{10}\text{ life, hours} = \left(\frac{C}{P}\right)^{10/3} \times \left(\frac{16{,}667}{\text{rpm}}\right)$$

Where:

C = Dynamic capacity, lbs (Table 1 of this section)

P = Equivalent radial load, lbs

General

Heavy service – For heavy shock loads, frequent shock loads, or severe vibrations, add up to 50 percent (according to severity of conditions) to the equivalent radial load to obtain a modified equivalent radial load. Consult Application Engineering for additional selection assistance.

Thrust load values shown in the table below are recommended as a guide for general applications that will give adequate L_{10} life. Spherical bearings require a radial load at least equal to the thrust load for proper operation. If the thrust load exceeds this limit, consult Application Engineering. Where substantial radial load is also present, it is advisable to calculate actual L_{10} life to assure that it meets the requirements. The effectiveness of the shaft attachment to carry thrust load depends on proper tightening of the bearing to the shaft. Therefore, it is advisable to use auxiliary thrust carrying devices such as shaft shoulder, snap ring or a thrust collar to locate the bearing under thrust loads heavier than shown below, or where extreme reliability is desired.

Rpm range	20—200	201—2000	Over 2000
Recommended thrust load	C/20	C/40	C/60

The shaft tolerances recommended below are adequate for normal radial and radial/thrust load applications. Since the allowable load, especially at a low speed, is very large, the shaft should be checked to assure adequate shaft strength.

The magnitude and direction of both the thrust and radial load must be taken into account when selecting a housing. When pillow blocks are utilized, heavy loads should be directed through the base. Where cap loads are involved, see Table 3, 4, and 5 for maximum values. Where a load pulls the housing away from the mounting base, both the hold-down bolts and housing must be of adequate strength. Auxiliary load carrying devices such as shear bars are advisable for side or end loading of pillow blocks and radial loads for flange units.

Shaft tolerances

Shaft size (in)	Tolerance (in)
Up to 1-1/2	+0.000 to -0.002
1-9/16 to 2-1/2	+0.000 to -0.003
2-5/8 to 4	+0.000 to -0.004
4-3/16 to 6	+0.000 to -0.005
6-7/16 to 7-15/16	+0.000 to -0.006
8 to 9	+0.000 to -0.007
Over 9	+0.000 to -0.008

Bearing supporting radial loads only

1. Define L_{10} life hours desired.
2. Establish bearing radial load, F_R
   (F_R = P for pure radial load conditions).
3. Establish rpm.

Using the easy selection Table 2 for Safety Mount, find, under the rpm column, the equivalent radial load that equals or is slightly higher than the application radial load for the desired life. The shaft size on the far left will be the minimum shaft size that you can use for your application.

If the desired life is different than the values shown on the chart, use alternate method A shown below.

Example:

L_{10} life = 30,000 hours

Radial load = 4,000 lbs

Rpm = 1,000

At the intersection of the 1,000 rpm column and the 30,000 hours L_{10} life row, the equivalent radial load of 4,749 lbs exceeds the 4,000 lbs radial load for shaft size 2-3/8 to 2-1/2 inches. A bearing with bore ranging from 2-3/8 to 2-1/2 inches, or larger, may be used for this application.

Safety Mount family
IP, ISAF, ISN

Alternate method A – Selecting a bearing for an L_{10} life value not shown in the Easy Selection chart.

The L_{10} life equation can be rearranged so that the bearing dynamic capacity C is identified in terms of L_{10}, rpm and P.

$$C = \left(\frac{L_{10} \times rpm}{16{,}667} \right)^{0.3} X \quad P$$

($P = F_R$ for pure radial load conditions)

Since the L_{10}, rpm and P are known, solve for C. Select from the dynamic capacity column on Table 1 the C value equal to or greater than the C value just calculated. The bore size on the far left represents the proper bore size selection. Check that the application rpm does not exceed the maximum rpm from Table 1. When selecting an L_{10} life of less than 30,000 hours, particular attention must be paid to shaft deflection and proper lubricant selection.

Selecting bearings supporting combination radial and thrust loads

When a bearing supports both a radial load and a thrust load, the loading on the two rows is shared unequally depending on the ratio of thrust to radial load. The use of the X (radial factor) and Y (thrust factor) from Table 1 converts the applied thrust load and radial load to an equivalent radial load having the same effect on the life of the bearing as a radial load of this magnitude.

The equivalent radial load:

$P = XFR + YFA$

Where:

P = Equivalent radial load, lbs

F_R = Radial load, lbs (see Table 1 for allowable slip fit maximum load)

F_A = Thrust (axial) load, lbs

e = Thrust load to radial load factor (Table 1)

X = Radial load factor (Table 1)

Y = Thrust load factor (Table 1)

To find X and Y, calculate F_A/F_R and compare to e for the selected bore size. Determine X and Y from Table 1 depending on whether F_A/F_R is equal to or less than e, or F_A/F_R is greater than e. Substitute all known values into the equivalent radial load equation. P (equivalent radial load) can be used in the life formula to determine L_{10}, or it can be compared to the allowable equivalent radial load ratings for the speed and hours life desired in the easy selection.

Selecting bearings supporting only thrust loads

Spherical roller bearings generally are not recommended for pure thrust load applications. However, they will perform satisfactorily under very light pure thrust loads. Consult Application Engineering at +1 864-284-5700.

Selecting lubrication

Safety Mount spherical roller bearings are lubricated at the factory with Mobil Grease XHP 222 - lithium complex grease. This grease will adequately handle low and medium speeds with low and medium loads at normal temperatures on Table 9. For very low and high speeds, heavy loads, and low and high temperatures, special greases may be used. Contact Application Engineering at +1 864-284-5700 for bearing and lubricant recommendations for the above unusual conditions. Dodge also has the expertise to custom design and build special bearings for your needs. The only maintenance requirement for Dodge spherical roller bearings is periodic relubrication at regular intervals as outlined in the appropriate instruction manuals.

Misalignment consideration

In nearly all applications, good design practice requires two bearings supporting the shaft. In cases where three or more bearings are installed, unless precautions are taken to line the bearings up both vertically and horizontally, it is possible to induce heavy loads. In the case of two bearings, alignment is not as critical, especially with Dodge Unitized spherical roller bearings. Safety Mount bearings are designed to allow a maximum of +/- one degree of static and dynamic misalignment. To ensure good alignment, mounting surfaces must be checked for flatness and must lie in the same plane. When tightening base bolts, each bolt should be alternately tightened in incremental torque values until full torque is achieved to prevent the angular shifting of the pillow block that occurs when one bolt is tightened to its full torque. Shimming may be required to minimize misalignment.

Safety Mount family

IP, ISAF, ISN

Table 1: Safety Mount spherical roller bearing

Shaft size (in)	Bearing series	e	F_A/F_R<e		F_A/F_R>e		Adapter maximum thrust load lbs	Dynamic capacity (C) lbs	Static capacity (C_0) lbs	Maximum speed*		Maximum ISAF expansion capability (in)
			X	Y	X	Y				Labyrinth rpm	Trident rpm	
1-1/8 1-3/16 1-1/4 1-3/8 1-7/16 1-1/2	22208	0.28	1.0	2.4	0.67	3.6	620	22,700	21,000	6,000	3,975	7/32
1-1/2 ** 1-5/8 1-11/16 1-3/4	22209	0.26	1.0	2.6	0.67	3.9	700	23,400	22,000	5,600	3,725	7/32
1-3/4 ** 1-7/8 1-15/16 2	22210	0.24	1.0	2.8	0.67	4.2	775	24,500	24,000	5,300	3,520	17/64
2-3/16 2-1/4	22211	0.23	1.0	2.9	0.67	4.3	930	29,000	29,000	4,500	3,000	7/32
2-1/4 ** 2-3/8 2-7/16 2-1/2	22213	0.24	1.0	2.8	0.67	4.2	1,360	45,000	47,500	3,800	2,400	5/16
2-11/16 2-3/4 2-15/16 3	22215	0.22	1.0	3.1	0.67	4.6	1,570	48,600	53,000	3,400	2,250	15/64
3-3/16 3-1/4 3-7/16 3-1/2	22218	0.23	1.0	2.9	0.67	4.3	2,430	77,600	81,500	2,600	1,825	3/8
3-11/16 3-15/16 4	22220	0.24	1.0	2.8	0.67	4.2	3,100	96,000	104,000	2,200	1,530	3/8
4-7/16 4-1/2	22222	0.25	1.0	2.7	0.67	4.0	3,930	123,000	132,000	2,000	1,325	3/8
4-15/16 5	22226	0.26	1.0	2.6	0.67	3.9	5,610	171,000	196,000	1,800	1,175	3/8
5-7/16 5-1/2	22228	0.25	1.0	2.7	0.67	4.0	6,419	195,000	236,000	1,700	1,100	3/8
5-15/16 6	22232	0.26	1.0	2.6	0.67	3.9	8,630	258,000	315,000	1,500	975	3/8
6-7/16 6-1/2 6-15/16 7	22236	0.25	1.0	2.7	0.67	4.0	10,437	305,000	375,000	1,300	845	3/8
7-3/16	22240	0.29	1.0	2.3	0.67	3.5	13,215	300,000	450,000	1,000	650	3/8
7-1/2 7-15/16 8	22244	0.29	1.0	2.3	0.67	3.5	16,020	365,000	550,000	925	600	3/8
8-1/2 9	23048	0.25	1.0	2.7	0.67	4.1	14,887	260,000	490,000	925	600	5/8
9-1/2	23052	0.26	1.0	2.6	0.67	3.9	18,232	340,000	630,000	900	585	17/32
10 10-1/2	23056	0.25	1.0	2.7	0.67	4.1	20,000	345,000	670,000	850	550	1-5/8

* Maximum grease speed is dependent on load and ambient conditions, consult Application Engineering.

** Safety Mount – Type E-dimensional housing.

Safety Mount family

IP, ISAF, ISN

Table 2: Allowable equivalent radial load rating at various revolutions per minute

Size (in)	L_{10} life hours	Allowable equivalent radial load rating (lbs) at various revolutions per minute									
		50	100	150	250	500	750	1000	1300	1500	1700
1-1/8 to 1-1/2	10,000	8183	6646	5885	5049	4101	3631	3331	3079	2950	2841
	30,000	5885	4780	4233	3631	2950	2612	2396	2214	2121	2043
	40,000	5399	4385	3883	3331	2706	2396	2198	2031	1946	1874
	60,000	4780	3883	3438	2950	2396	2121	1946	1799	1723	1660
	100,000	4101	3331	2950	2530	2055	1820	1669	1543	1478	1424
*1-1/2 1-5/8 1-11/16 1-3/4	10,000	8435	6851	6067	5205	4227	3743	3434	3174	3041	2928
	30,000	6067	4928	4363	3743	3041	2692	2470	2283	2187	2106
	40,000	5565	4520	4002	3434	2789	2470	2265	2094	2006	1932
	60,000	4928	4002	3544	3041	2470	2187	2006	1854	1776	1711
	100,000	4227	3434	3041	2609	2119	1876	1721	1591	1524	1468
*1-3/4 1-7/8 1-15/16 2	10,000	8831	7173	6352	5449	4426	3919	3595	3323	3183	3066
	30,000	6352	5159	4568	3919	3183	2819	2586	2390	2290	2205
	40,000	5827	4733	4191	3595	2920	2586	2372	2192	2100	2023
	60,000	5159	4191	3711	3183	2586	2290	2100	1941	1860	1791
	100,000	4426	3595	3183	2731	2218	1964	1802	1665	1595	1537
2-3/16 to 2-1/4	10,000	10454	8491	7518	6450	5239	4639	4256	3933	3768	3629
	30,000	7518	6107	5407	4639	3768	3337	3061	2829	2710	2610
	40,000	6897	5602	4960	4256	3457	3061	2808	2595	2486	2394
	60,000	6107	4960	4392	3768	3061	2710	2486	2298	2201	2120
	100,000	5239	4256	3768	3233	2626	2325	2133	1971	1889	1819
*2-1/4 2-3/8 2-7/16 2-1/2	10,000	16221	13176	11667	10009	8130	7199	6603	6104	5847	5632
	30,000	11667	9476	8391	7199	5847	5177	4749	4390	4205	4050
	40,000	10702	8693	7697	6603	5364	4749	4357	4027	3858	3715
	60,000	9476	7697	6815	5847	4749	4205	3858	3566	3416	3290
	100,000	8130	6603	5847	5016	4075	3608	3310	3059	2931	2823
2-11/16 to 3	10,000	17519	14230	12600	10810	8780	7775	7132	6592	6315	6082
	30,000	12600	10234	9062	7775	6315	5592	5129	4741	4542	4374
	40,000	11558	9388	8313	7132	5793	5129	4705	4349	4166	4013
	60,000	10234	8313	7361	6315	5129	4542	4166	3851	3689	3553
	100,000	8780	7132	6315	5418	4401	3897	3574	3304	3165	3048
3-3/16 to 3-1/2	10,000	27972	22721	20118	17260	14019	12414	11387	10525	10083	9711
	30,000	20118	16341	14470	12414	10083	8928	8190	7570	7252	6985
	40,000	18455	14990	13273	11387	9249	8190	7513	6944	6652	6407
	60,000	16341	13273	11753	10083	8190	7252	6652	6149	5890	5673
	100,000	14019	11387	10083	8650	7026	6222	5707	5275	5053	4867
3-11/16 to 4	10,000	34605	28108	24889	21352	17344	15357	14087	13021	12474	12014
	30,000	24889	20216	17900	15357	12474	11045	10132	9365	8971	8641
	40,000	22831	18544	16420	14087	11442	10132	9294	8591	8230	7926
	60,000	20216	16420	14540	12474	10132	8971	8230	7607	7287	7019
	100,000	17344	14087	12474	10702	8692	7697	7060	6526	6252	6021

Only the labyrinth seal (L seal) may be used to the right of the heavy line.

Applications in the light shaded cells may require a high temperature lubrication, consult Application Engineering at +1 864 297 4800.

* Safety Mount – Type E-dimensional housing.

Safety Mount family

IP, ISAF, ISN

Table 2: Allowable equivalent radial load rating at various revolutions per minute

Size (in)	L_{10} life hours	Allowable equivalent radial load rating (lbs) at various revolutions per minute											
		1800	2000	2200	2600	2750	3000	3400	3800	4500	5300	5600	6000
1-1/8 to 1-1/2	10,000	2793	2706	2629	2501	2459	2396	2307	2232	2121	2020	1987	1946
	30,000	2008	1946	1891	1799	1769	1723	1660	1605	1526	1453	1429	1400
	40,000	1842	1785	1735	1650	1622	1581	1522	1472	1400	1333	1311	1284
	60,000	1631	1581	1536	1461	1437	1400	1348	1304	1239	1180	1161	1137
	100,000	1400	1356	1318	1253	1232	1201	1156	1119	1063	1012	996	975
*1-1/2 1-5/8 1-11/16 1-3/4	10,000	2879	2789	2710	2578	2535	2470	2379	2301	2187	2082	2048	—
	30,000	2070	2006	1949	1854	1823	1776	1711	1655	1573	1497	1473	—
	40,000	1899	1840	1788	1701	1672	1629	1569	1518	1443	1374	1351	—
	60,000	1682	1629	1583	1506	1481	1443	1390	1344	1278	1216	1196	—
	100,000	1443	1398	1358	1292	1270	1238	1192	1153	1096	1043	1026	—
*1-3/4 1-7/8 1-15/16 2	10,000	3014	2920	2838	2699	2654	2586	2490	2409	2290	2180	—	—
	30,000	2168	2100	2041	1941	1909	1860	1791	1732	1647	1568	—	—
	40,000	1988	1927	1872	1781	1751	1706	1643	1589	1511	1438	—	—
	60,000	1761	1706	1658	1577	1551	1511	1455	1407	1338	1273	—	—
	100,000	1511	1464	1422	1353	1330	1296	1248	1207	1148	1093	—	—
2-3/16 to 2-1/4	10,000	3568	3457	3359	3195	3142	3061	2948	2851	2710	—	—	—
	30,000	2566	2486	2416	2298	2260	2201	2120	2051	1949	—	—	—
	40,000	2354	2280	2216	2108	2073	2019	1945	1881	1788	—	—	—
	60,000	2084	2019	1962	1866	1835	1788	1722	1666	1583	—	—	—
	100,000	1788	1732	1684	1601	1575	1534	1477	1429	1358	—	—	—
*2-1/4 2-3/8 2-7/16 2-1/2	10,000	5536	5364	5212	4958	4875	4749	4574	4424	—	—	—	—
	30,000	3982	3858	3749	3566	3506	3416	3290	3182	—	—	—	—
	40,000	3652	3539	3439	3271	3216	3133	3018	2919	—	—	—	—
	60,000	3234	3133	3045	2896	2848	2775	2672	2585	—	—	—	—
	100,000	2775	2688	2612	2485	2443	2380	2293	2217	—	—	—	—
2-11/16 to 3	10,000	5979	5793	5629	5354	5265	5129	4940	—	—	—	—	—
	30,000	4300	4166	4049	3851	3787	3689	3553	—	—	—	—	—
	40,000	3945	3822	3714	3533	3474	3384	3259	—	—	—	—	—
	60,000	3493	3384	3289	3128	3076	2996	2886	—	—	—	—	—
	100,000	2996	2903	2821	2683	2639	2571	2476	—	—	—	—	—
3-3/16 to 3-1/2	10,000	9546	9249	8989	8549	—	—	—	—	—	—	—	—
	30,000	6866	6652	6465	6149	—	—	—	—	—	—	—	—
	40,000	6298	6102	5930	5640	—	—	—	—	—	—	—	—
	60,000	5577	5403	5251	4994	—	—	—	—	—	—	—	—
	100,000	4785	4636	4505	4285	—	—	—	—	—	—	—	—
3-11/16 to 4	10,000	11810	11442	11120	—	—	—	—	—	—	—	—	—
	30,000	8494	8230	7998	—	—	—	—	—	—	—	—	—
	40,000	7792	7549	7336	—	—	—	—	—	—	—	—	—
	60,000	6899	6685	6496	—	—	—	—	—	—	—	—	—
	100,000	5919	5735	5573	—	—	—	—	—	—	—	—	—

Only the labyrinth seal (L seal) may be used to the right of the heavy line.

Applications in the light shaded cells may require a high temperature lubrication, consult Application Engineering at +1 864 297 4800.

* Safety Mount – Type E-dimensional housing.

Safety Mount family

IP, ISAF, ISN

Table 2: Allowable equivalent radial load rating at various revolutions per minute

Size (in)	L_{10} life hours	Allowable equivalent radial load rating (lbs) at various revolutions per minute									
		50	100	150	250	500	750	1000	1300	1500	1700
4-7/16 to 4-1/2	10,000	44338	36013	31889	27358	22221	19676	18049	16683	15982	15393
	30,000	31889	25902	22935	19676	15982	14152	12982	11999	11495	11071
	40,000	29252	23760	21039	18049	14661	12982	11908	11007	10544	10156
	60,000	25902	21039	18629	15982	12982	11495	10544	9746	9337	8993
	100,000	22221	18049	15982	13711	11137	9862	9046	8361	8010	7715
4-15/16 to 5	10,000	61640	50067	44333	38034	30893	27355	25093	23194	22219	21400
	30,000	44333	36009	31885	27355	22219	19674	18047	16681	15980	15392
	40,000	40667	33032	29249	25093	20382	18047	16555	15302	14659	14119
	60,000	36009	29249	25899	22219	18047	15980	14659	13550	12980	12502
	100,000	30893	25093	22219	19062	15483	13710	12576	11624	11136	10726
5-7/16 to 5-1/2	10,000	70291	57094	50555	43372	35229	31194	28615	26449	25338	24404
	30,000	50555	41063	36360	31194	25338	22436	20580	19023	18223	17552
	40,000	46375	37668	33354	28615	23243	20580	18879	17450	16717	16100
	60,000	41063	33354	29534	25338	20580	18223	16717	15451	14802	14256
	100,000	35229	28615	25338	21738	17656	15634	14341	13256	12699	12231
5-15/16 to 6	10,000	93001	75540	66888	57385	46611	41272	37860	34994	33524	—
	30,000	66888	54330	48108	41272	33524	29684	27230	25169	24111	—
	40,000	61358	49838	44130	37860	30752	27230	24978	23087	22117	—
	60,000	54330	44130	39075	33524	27230	24111	22117	20443	19584	—
	100,000	46611	37860	33524	28760	23361	20685	18975	17539	16802	—
6-7/16 to 7	10,000	109943	89301	79073	67838	55102	48791	44757	41369	—	—
	30,000	79073	64227	56871	48791	39631	35092	32190	29753	—	—
	40,000	72535	58917	52169	44757	36354	32190	29528	27293	—	—
	60,000	64227	52169	46194	39631	32190	28503	26146	24167	—	—
	100,000	55102	44757	39631	34000	27616	24453	22431	20734	—	—
7-3/16	10,000	108140	87837	77777	66726	54199	47991	44023	—	—	—
	30,000	77777	63175	55939	47991	38981	34516	31662	—	—	—
	40,000	71346	57951	51314	44023	35758	31662	29044	—	—	—
	60,000	63175	51314	45437	38981	31662	28036	25718	—	—	—
	100,000	54199	44023	38981	33442	27164	24052	22064	—	—	—
7-1/2 to 8	10,000	131571	106869	94629	81184	65942	58389	53561	—	—	—
	30,000	94629	76862	68059	58389	47427	41995	38522	—	—	—
	40,000	86804	70507	62432	53561	43505	38522	35337	—	—	—
	60,000	76862	62432	55281	47427	38522	34110	31290	—	—	—
	100,000	65942	53561	47427	40688	33049	29264	26844	—	—	—
8-1/2 to 9	10,000	93722	76126	67407	57829	46972	41592	38153	—	—	—
	30,000	67407	54751	48480	41592	33783	29914	27441	—	—	—
	40,000	61833	50224	44472	38153	30990	27441	25172	—	—	—
	60,000	54751	44472	39378	33783	27441	24298	22289	—	—	—
	100,000	46972	38153	33783	28983	23542	20845	19122	—	—	—
9-1/2	10,000	122559	99549	88147	75623	61425	54390	49893	—	—	—
	30,000	88147	71598	63398	54390	44178	39118	35884	—	—	—
	40,000	80859	65678	58155	49893	40525	35884	32917	—	—	—
	60,000	71598	58155	51495	44178	35884	31774	29147	—	—	—
	100,000	61425	49893	44178	37901	30785	27259	25006	—	—	—
10 to 10-1/2	10,000	124361	101013	89444	76735	62328	55190	50626	—	—	—
	30,000	89444	72651	64330	55190	44828	39694	36412	—	—	—
	40,000	82048	66644	59011	50626	41121	36412	33401	—	—	—
	60,000	72651	59011	52252	44828	36412	32241	29575	—	—	—
	100,000	62328	50626	44828	38459	31238	27660	25373	—	—	—

Only the labyrinth seal (L seal) may be used to the right of the heavy line.

Applications in the light shaded cells may require a high temperature lubrication, consult Application Engineering at +1 864 297 4800.

* Safety Mount – Type E-dimensional housing.

Safety Mount family

IP, ISAF, ISN

Table 2: Allowable equivalent radial load rating at various revolutions per minute

Size (in)	L_{10} life hours	Allowable equivalent radial load rating (lbs) at various revolutions per minute											
		1800	2000	2200	2600	2750	3000	3400	3800	4500	5300	5600	6000
4-7/16 to 4-1/2	10,000	15131	14661	—	—	—	—	—	—	—	—	—	—
	30,000	10883	10544	—	—	—	—	—	—	—	—	—	—
	40,000	9983	9672	—	—	—	—	—	—	—	—	—	—
	60,000	8840	8565	—	—	—	—	—	—	—	—	—	—
	100,000	7584	7348	—	—	—	—	—	—	—	—	—	—
4-15/16 to 5	10,000	21036	—	—	—	—	—	—	—	—	—	—	—
	30,000	15130	—	—	—	—	—	—	—	—	—	—	—
	40,000	13879	—	—	—	—	—	—	—	—	—	—	—
	60,000	12289	—	—	—	—	—	—	—	—	—	—	—
	100,000	10543	—	—	—	—	—	—	—	—	—	—	—
5-7/16 to 5-1/2	10,000	—	—	—	—	—	—	—	—	—	—	—	—
	30,000	—	—	—	—	—	—	—	—	—	—	—	—
	40,000	—	—	—	—	—	—	—	—	—	—	—	—
	60,000	—	—	—	—	—	—	—	—	—	—	—	—
	100,000	—	—	—	—	—	—	—	—	—	—	—	—
5-15/16 to 6	10,000	—	—	—	—	—	—	—	—	—	—	—	—
	30,000	—	—	—	—	—	—	—	—	—	—	—	—
	40,000	—	—	—	—	—	—	—	—	—	—	—	—
	60,000	—	—	—	—	—	—	—	—	—	—	—	—
	100,000	—	—	—	—	—	—	—	—	—	—	—	—
6-7/16 to 7	10,000	—	—	—	—	—	—	—	—	—	—	—	—
	30,000	—	—	—	—	—	—	—	—	—	—	—	—
	40,000	—	—	—	—	—	—	—	—	—	—	—	—
	60,000	—	—	—	—	—	—	—	—	—	—	—	—
	100,000	—	—	—	—	—	—	—	—	—	—	—	—

Only the labyrinth seal (L seal) may be used to the right of the heavy line.

Applications in non-shaded cells may require a high temperature lubrication, consult Application Engineering at +1 864 297 4800.

* Safety Mount – Type E-dimensional housing.

Safety Mount family

IP

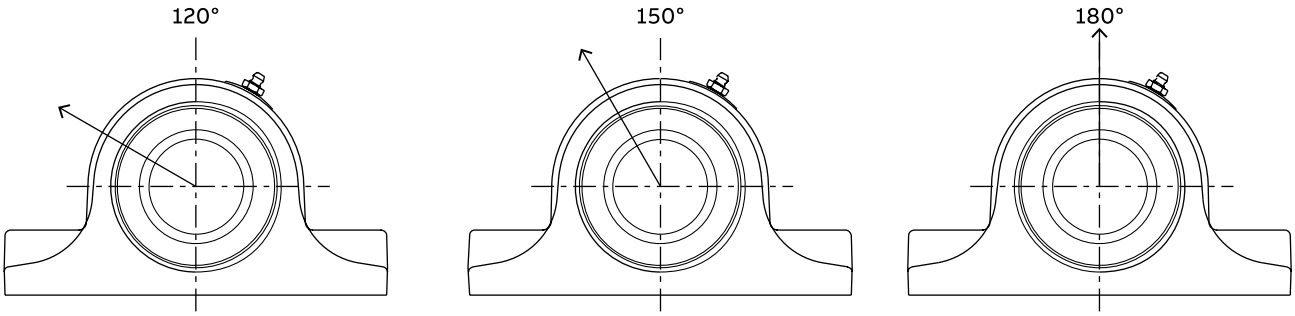

Table 3: IP 2-bolt pillow block housing ratings*

Bore size (in)	Maximum recommended housing cap loads, lbs		
	120°	150°	180°
1-1/8—1-1/2	2110	2640	3100
1-5/8—1-3/4	2380	2980	3500
1-7/8—2	3130	3910	4600
2-3/16—2-1/4	3330	4160	4900
2-3/8—2-1/2	3330	4160	4900
2-11/16—3	4420	5520	6500
3-3/16—3-1/2	4620	5780	6800
3-11/16—4	7500	9350	11000

Table 4: IP 4-bolt pillow block housing ratings*

Bore size (in)	Maximum recommended housing cap loads, lbs		
	120°	150°	180°
2-3/8—2-1/2	3810	4760	5600
2-11/16—3	4620	5780	6800
3-3/16—3-1/2	4700	5870	6900
3-11/16—4	7500	9350	11000
4-7/16—4-1/2	9900	12330	14500
4-15/16	13400	16750	19700

* When utilizing heavy cap loads on pillow block housings; the installation must adhere to the following procedures:

1. The pillow block base bolts must be of high strength (Grade 8 or Class 10.9) bolts and properly tightened to mounting structure.
2. Stop bars (shear strips) should be used against the plummer block where side loads are encountered.
3. In all cases where loads are heavy, the L_{10} life of the bearing should be checked for proper selection and life requirements.

Safety Mount family

IP

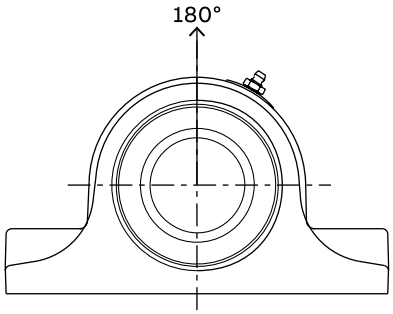

Table 5 :IP-HD steel housing ratings*

Shaft sizes (in)	Series	Maximum recommended housing loads, lbs	
		P2B	P4B
1-1/8	22208	24400	
1-3/16			
1-1/4			
1-3/8			
1-7/16			
1-1/2			
1-1/2**	22209	26400	
1-5/8			
1-11/16			
1-3/4			
1-3/4**	22210	30200	
1-15/16			
2			
2-3/16	22211	35400	
2-1/4			
2-1/4**	22213	51300	52800
2-3/8			
2-7/16			
2-1/2			
2-11/16	22215	59700	60000
2-3/4			
2-15/16			
3			
3-3/16	22218	90700	95500
3-1/4			
3-7/16			
3-1/2			
3-11/16	22220		115000
3-15/16			
4			
4-7/16	22222		152100
4-1/2			
4-15/16	22226		188200
5			

* It is important to note that the values listed above are housing fracture loads from various applied directions.
These loads may exceed bearing, mounting bolt and/or shaft capacities.
Applications subject to heavy housing loads, particularly shock loads, must adhere to the following procedures:
(1) The pillow block base bolts must be of high strength (Grade 8) bolts and properly tightened to mounting structure.
(2) Stop bars (shear strips) should be used against the plummer block where side loads are encountered.
(3) In all cases where loads are heavy, the L_{10} life of the bearing should be checked for proper selection and life requirements.

** Safety Mount - Type E-dimensional housing

Safety Mount family
ISAF

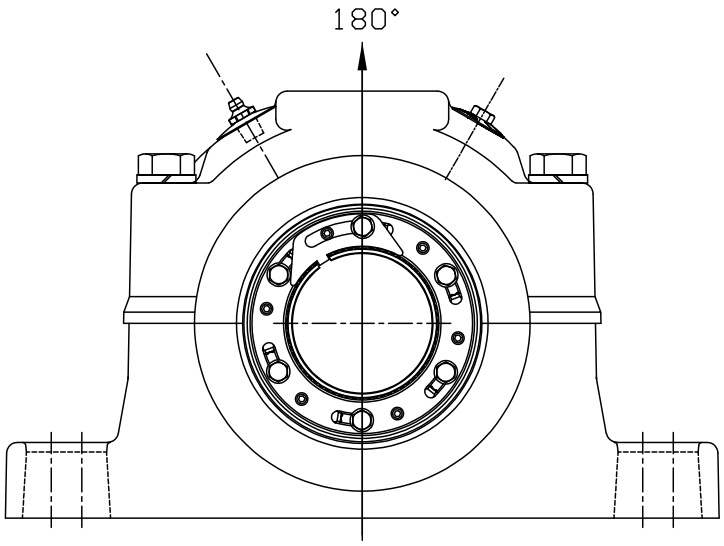

Table 6: Safety Mount ISAF housing rating*

Shaft size (in)	Maximum recommended housing Cap loads, lbs
	180°
1-1/8—1-1/2	4,600
1-5/8—1-3/4	5,400
1-7/8—2	7,875
2-3/16—2-1/4	9,200
2-3/8—2-1/2	9,220
2-11/16—3	10,200
3-3/8—3-1/2	14,700
3-11/16—4	17,800
4-7/16—4-1/2	18,300
4-15/16—5	22,300
5-7/16—5-1/2	25,100
5-15/16—6	30,200
6-7/16—7	35,300
7-3/16—10-1/2	50,000

* When utilizing heavy cap loads on pillow block housings; the installation must adhere to the following procedures:

1. The pillow block base bolts must be of high strength (Grade 8) bolts and properly tightened to mounting structure.
2. Stop bars (shear strips) should be used against the plummer block where side loads are encountered.
3. In all cases where loads are heavy, the L_{10} life of the bearing should be checked for proper selection and life requirements.

Safety Mount family

ISN

Table 7: ISN housing rating*

Bore size (mm)	Maximum recommended housing cap loads, kN		
	120˚	150˚	180˚
507 508	9.4	11.7	13.8
509 510	10.6	13.3	15.6
511	13.9	17.4	20.5
512	14.8	18.5	21.8
513 515	14.8	18.5	21.8
516 517	19.7	24.6	28.9
518 519	20.6	25.7	30.2
520 522	33.4	41.6	48.9
524	44	54.8	64.5
526 528	59.6	74.5	87.6
530	67.2	84.1	99.0
532	89.8	112.5	132.3

* When utilizing heavy cap loads on pillow block housings; the installation must adhere to the following procedures:

1. The pillow block base bolts must be of high strength (Grade 8 or Class 10.9) bolts and properly tightened to mounting structure.
2. Stop bars (shear strips) should be used against the plummer block where side loads are encountered.
3. In all cases where loads are heavy, the L_{10} life of the bearing should be checked for proper selection and life requirements.

Table 8: Definition of operating conditions for unitized spherical roller bearings

Low speed	Up to 20% of maximum rpm (Table 1 and/or Table 3)
Medium speed	Over 20% to 80% of maximum rpm
High speed	Over 80% of maximum rpm
Light load	Up to 8% of C (Table 1 and/or Table 3) – C = Dynamic capacity
Normal load	Over 8% to 18% of C
Heavy load	Over 18% of C
Low temperature	20 °F to -100 °F (-73 °C to -7 °C)
Medium temperature	Over 20 °F to 200 °F (over -7 °C to 93 °C)
High temperature	Over 200 °F to 250 °F (over 93 °C to 122 °C)

Safety Mount family

ISN

Table 9: ISN spherical roller bearings

Housing	Bearing series	Maximum allowable adapter thrust	Basic load ratings		e	$F_A/F_R \leq e$		$F_A/F_R > e$		Max rpm ★		
			Dynamic capacity (C)	Static capacity (C_0)		X_1	Y_1	X_2	Y_2	Trident seal	Labyrinth seal	Maximum expansion
		kN	kN	kN								
507 508	22208	2.7	101	94	0.28	1.0	2.4	0.67	3.6	3975	6000	3.18
509	22209	3.1	104.1	105	0.26	1.0	2.6	0.67	3.9	3725	5600	3.18
510 511	22210	3.4	109	118	0.24	1.0	2.8	0.67	4.2	3520	5300	6.35
512	22211	4.1	129	145	0.23	1.0	2.9	0.67	4.3	3000	4500	6.35
513	22213	6.0	200.2	216	0.24	1.0	2.8	0.67	4.2	2400	3800	6.35
515 516 517	22215	7.0	216.2	236	0.22	1.0	3.1	0.67	4.6	2250	3400	6.35
518 519	22218	10.8	345.2	363	0.23	1.0	2.9	0.67	4.3	1825	2600	6.35
520 522	22220	13.8	427	463	0.24	1.0	2.8	0.67	4.2	1530	2200	7.94
524	22222	17.5	547	587	0.25	1.0	2.7	0.67	4.0	1325	2000	9.53
526 528	22226	25.0	760.6	872	0.26	1.0	2.6	0.67	4.0	1175	1800	9.53
530	22228	28.5	867.4	1050	0.25	1.0	2.7	0.67	4.0	1100	1700	9.53
532	22232	38.4	1147.6	1401	0.26	1.0	2.6	0.68	3.9	975	1500	9.53

Refer to Table 10 for information on bearing calculations, including L_{10} life and loads.

★ Maximum grease speed is dependant on load and ambient conditions. Consult Application Engineering.

Safety Mount family

ISN

Table 10: ISN spherical roller bearing

Housing	L_{10} life hours	Allowable equivalent radial load rating (kN) at various rpm																						
		50	100	150	250	500	750	1000	1300	1500	1700	1800	2000	2200	2600	2750	3000	3400	3800	4500	5300	5600	6000
507	10,000	36	30	26	22	18	16	15	14	13	13	12	12	12	11	11	11	10	10	9	9	9	9
	30,000	26	21	19	16	13	12	11	10	9	9	9	9	8	8	8	8	7	7	7	6	6	6
	40,000	24	20	17	15	12	11	10	9	9	8	8	8	8	7	7	7	7	7	6	6	6	6
	60,000	21	17	15	13	11	9	9	8	8	7	7	7	7	6	6	6	6	6	6	5	5	5
	100,000	18	15	13	11	9	8	7	7	7	6	6	6	6	6	5	5	5	5	5	5	4	4
508	10,000	36	30	26	22	18	16	15	14	13	13	12	12	12	11	11	11	10	10	9	9	9	9
	30,000	26	21	19	16	13	12	11	10	9	9	9	9	8	8	8	8	7	7	7	6	6	6
	40,000	24	20	17	15	12	11	10	9	9	8	8	8	8	7	7	7	7	7	6	6	6	6
	60,000	21	17	15	13	11	9	9	8	8	7	7	7	7	6	6	6	6	6	6	5	5	5
	100,000	18	15	13	11	9	8	7	7	7	6	6	6	6	6	5	5	5	5	5	5	4	4
509	10,000	38	30	27	23	19	17	15	14	14	13	13	12	12	11	11	11	11	10	10	9	9	—
	30,000	27	22	19	17	14	12	11	10	10	9	9	9	9	8	8	8	8	7	7	7	7	—
	40,000	25	20	18	15	12	11	10	9	9	9	8	8	8	8	7	7	7	7	6	6	6	—
	60,000	22	18	16	14	11	10	9	8	8	8	7	7	7	7	7	6	6	6	6	5	5	—
	100,000	19	15	14	12	9	8	8	7	7	7	6	6	6	6	6	6	5	5	5	5	5	—
510	10,000	39	32	28	24	20	17	16	15	14	14	13	13	13	12	12	12	11	11	10	10	—	—
	30,000	28	23	20	17	14	13	12	11	10	10	10	9	9	9	8	8	8	8	7	7	—	—
	40,000	26	21	19	16	13	12	11	10	9	9	9	9	8	8	8	8	7	7	7	6	—	—
	60,000	23	19	17	14	12	10	9	9	8	8	8	8	7	7	7	7	6	6	6	6	—	—
	100,000	20	16	14	12	10	9	8	7	7	7	7	7	6	6	6	6	6	5	5	5	—	—
511	10,000	39	32	28	24	20	17	16	15	14	14	13	13	13	12	12	12	11	11	10	10	—	—
	30,000	28	23	20	17	14	13	12	11	10	10	10	9	9	9	8	8	8	8	7	7	—	—
	40,000	26	21	19	16	13	12	11	10	9	9	9	9	8	8	8	8	7	7	7	6	—	—
	60,000	23	19	17	14	12	10	9	9	8	8	8	8	7	7	7	7	6	6	6	6	—	—
	100,000	20	16	14	12	10	9	8	7	7	7	7	7	6	6	6	6	6	5	5	5	—	—
512	10,000	46	38	33	29	23	21	19	17	17	16	16	15	15	14	14	14	13	13	12	—	—	—
	30,000	33	27	24	21	17	15	14	13	12	12	11	11	11	10	10	10	9	9	9	—	—	—
	40,000	31	25	22	19	15	14	12	12	11	11	10	10	10	9	9	9	9	8	8	—	—	—
	60,000	27	22	20	17	14	12	11	10	10	9	9	9	9	8	8	8	8	7	7	—	—	—
	100,000	23	19	17	14	12	10	9	9	8	8	8	8	7	7	7	7	7	6	6	—	—	—
513	10,000	72	59	52	45	36	32	29	27	26	25	25	24	23	22	22	21	20	20	—	—	—	—
	30,000	52	42	37	32	26	23	21	20	19	18	18	17	17	16	16	15	15	14	—	—	—	—
	40,000	48	39	34	29	24	21	19	18	17	17	16	16	15	15	14	14	13	13	—	—	—	—
	60,000	42	34	30	26	21	19	17	16	15	15	14	14	14	13	13	12	12	11	—	—	—	—
	100,000	36	29	26	22	18	16	15	14	13	13	12	12	12	11	11	11	10	10	—	—	—	—
515	10,000	78	63	56	48	39	35	32	29	28	27	27	26	25	24	23	23	22	—	—	—	—	—
	30,000	56	46	40	35	28	25	23	21	20	19	19	19	18	17	17	16	16	—	—	—	—	—
	40,000	51	42	37	32	26	23	21	19	19	18	18	17	17	16	15	15	14	—	—	—	—	—
	60,000	46	37	33	28	23	20	19	17	16	16	16	15	15	14	14	13	13	—	—	—	—	—
	100,000	39	32	28	24	20	17	16	15	14	14	13	13	13	12	12	11	11	—	—	—	—	—
516	10,000	78	63	56	48	39	35	32	29	28	27	27	26	25	24	23	23	22	—	—	—	—	—
	30,000	56	46	40	35	28	25	23	21	20	19	19	19	18	17	17	16	16	—	—	—	—	—
	40,000	51	42	37	32	26	23	21	19	19	18	18	17	17	16	15	15	14	—	—	—	—	—
	60,000	46	37	33	28	23	20	19	17	16	16	16	15	15	14	14	13	13	—	—	—	—	—
	100,000	39	32	28	24	20	17	16	15	14	14	13	13	13	12	12	11	11	—	—	—	—	—

Use the labyrinth (S) seal for applications to the right of the vertical line.
For applications in the dark shaded areas, the maximum load for the specific speed is shown. The load does not correspond to the L_{10} shown.
Applications in the light shaded areas may require high temperature lubrication. Please consult Application Engineering.

Safety Mount family

ISN

Table 10: ISN spherical roller bearing (continued)

Housing	L_{10} life hours	Allowable equivalent radial load rating (kN) at various rpm																						
		50	100	150	250	500	750	1000	1300	1500	1700	1800	2000	2200	2600	2750	3000	3400	3800	4500	5300	5600	6000
	10,000	78	63	56	48	39	35	32	29	28	27	27	26	25	24	23	23	22	—	—	—	—	—
	30,000	56	46	40	35	28	25	23	21	20	19	19	19	18	17	17	16	16	—	—	—	—	—
517	40,000	51	42	37	32	26	23	21	19	19	18	18	17	17	16	15	15	14	—	—	—	—	—
	60,000	46	37	33	28	23	20	19	17	16	16	16	15	15	14	14	13	13	—	—	—	—	—
	100,000	39	32	28	24	20	17	16	15	14	14	13	13	13	12	12	11	11	—	—	—	—	—
	10,000	124	101	89	77	62	55	51	47	45	43	42	41	40	38	—	—	—	—	—	—	—	—
	30,000	89	73	64	55	45	40	36	34	32	31	31	30	29	27	—	—	—	—	—	—	—	—
518	40,000	82	67	59	51	41	36	33	31	30	29	28	27	26	25	—	—	—	—	—	—	—	—
	60,000	73	59	52	45	36	32	30	27	26	25	25	24	23	22	—	—	—	—	—	—	—	—
	100,000	62	51	45	38	31	28	25	23	22	22	21	21	20	19	—	—	—	—	—	—	—	—
	10,000	124	101	89	77	62	55	51	47	45	43	42	41	40	38	—	—	—	—	—	—	—	—
	30,000	89	73	64	55	45	40	36	34	32	31	31	30	29	27	—	—	—	—	—	—	—	—
519	40,000	82	67	59	51	41	36	33	31	30	29	28	27	26	25	—	—	—	—	—	—	—	—
	60,000	73	59	52	45	36	32	30	27	26	25	25	24	23	22	—	—	—	—	—	—	—	—
	100,000	62	51	45	38	31	28	25	23	22	22	21	21	20	19	—	—	—	—	—	—	—	—
	10,000	154	125	111	95	77	68	63	58	55	53	53	51	49	—	—	—	—	—	—	—	—	—
	30,000	111	90	80	68	55	49	45	42	40	38	38	37	36	—	—	—	—	—	—	—	—	—
520	40,000	102	82	73	63	51	45	41	38	37	35	35	34	33	—	—	—	—	—	—	—	—	—
	60,000	90	73	65	55	45	40	37	34	32	31	31	30	29	—	—	—	—	—	—	—	—	—
	100,000	77	63	55	48	39	34	31	29	28	27	26	26	25	—	—	—	—	—	—	—	—	—
	10,000	154	125	111	95	77	68	63	58	55	53	53	51	49	—	—	—	—	—	—	—	—	—
	30,000	111	90	80	68	55	49	45	42	40	38	38	37	36	—	—	—	—	—	—	—	—	—
522	40,000	102	82	73	63	51	45	41	38	37	35	35	34	33	—	—	—	—	—	—	—	—	—
	60,000	90	73	65	55	45	40	37	34	32	31	31	30	29	—	—	—	—	—	—	—	—	—
	100,000	77	63	55	48	39	34	31	29	28	27	26	26	25	—	—	—	—	—	—	—	—	—
	10,000	197	160	142	122	99	88	80	74	71	68	67	65	—	—	—	—	—	—	—	—	—	—
	30,000	142	115	102	88	71	63	58	53	51	49	48	47	—	—	—	—	—	—	—	—	—	—
524	40,000	130	106	94	80	65	58	53	49	47	45	44	43	—	—	—	—	—	—	—	—	—	—
	60,000	115	94	83	71	58	51	47	43	42	40	39	38	—	—	—	—	—	—	—	—	—	—
	100,000	99	80	71	61	50	44	40	37	36	34	34	33	—	—	—	—	—	—	—	—	—	—
	10,000	274	223	197	169	137	122	112	103	99	95	94	—	—	—	—	—	—	—	—	—	—	—
	30,000	197	160	142	122	99	88	80	74	71	68	67	—	—	—	—	—	—	—	—	—	—	—
526	40,000	181	147	130	112	91	80	74	68	65	63	62	—	—	—	—	—	—	—	—	—	—	—
	60,000	160	130	115	99	80	71	65	60	58	56	55	—	—	—	—	—	—	—	—	—	—	—
	100,000	137	112	99	85	69	61	56	52	50	48	47	—	—	—	—	—	—	—	—	—	—	—
	10,000	274	223	197	169	137	122	112	103	99	95	94	—	—	—	—	—	—	—	—	—	—	—
	30,000	197	160	142	122	99	88	80	74	71	68	67	—	—	—	—	—	—	—	—	—	—	—
528	40,000	181	147	130	112	91	80	74	68	65	63	62	—	—	—	—	—	—	—	—	—	—	—
	60,000	160	130	115	99	80	71	65	60	58	56	55	—	—	—	—	—	—	—	—	—	—	—
	100,000	137	112	99	85	69	61	56	52	50	48	47	—	—	—	—	—	—	—	—	—	—	—
	10,000	313	254	225	193	157	139	127	118	113	109	—	—	—	—	—	—	—	—	—	—	—	—
	30,000	225	183	162	139	113	100	92	85	81	78	—	—	—	—	—	—	—	—	—	—	—	—
530	40,000	206	168	148	127	103	92	84	78	74	72	—	—	—	—	—	—	—	—	—	—	—	—
	60,000	183	148	131	113	92	81	74	69	66	63	—	—	—	—	—	—	—	—	—	—	—	—
	100,000	157	127	113	97	79	70	64	59	56	54	—	—	—	—	—	—	—	—	—	—	—	—
	10,000	313	254	225	193	157	139	127	118	113	—	—	—	—	—	—	—	—	—	—	—	—	—
	30,000	225	183	162	139	113	100	92	85	81	—	—	—	—	—	—	—	—	—	—	—	—	—
532	40,000	206	168	148	127	103	92	84	78	74	—	—	—	—	—	—	—	—	—	—	—	—	—
	60,000	183	148	131	113	92	81	74	69	66	—	—	—	—	—	—	—	—	—	—	—	—	—
	100,000	157	127	113	97	79	70	64	59	56	—	—	—	—	—	—	—	—	—	—	—	—	—

Use the labyrinth (S) seal for applications to the right of the vertical line.
For applications in the dark shaded areas, the maximum load for the specific speed is shown. The load does not correspond to the L_{10} shown.
Applications in the light shaded areas may require high temperature lubrication. Please consult Application Engineering.

Dimensions

IP pillow block – inch

2-bolt

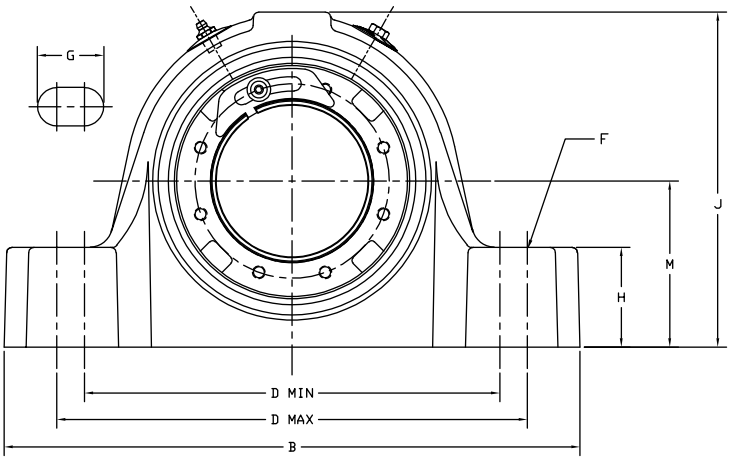

SIZES 102 THRU 308

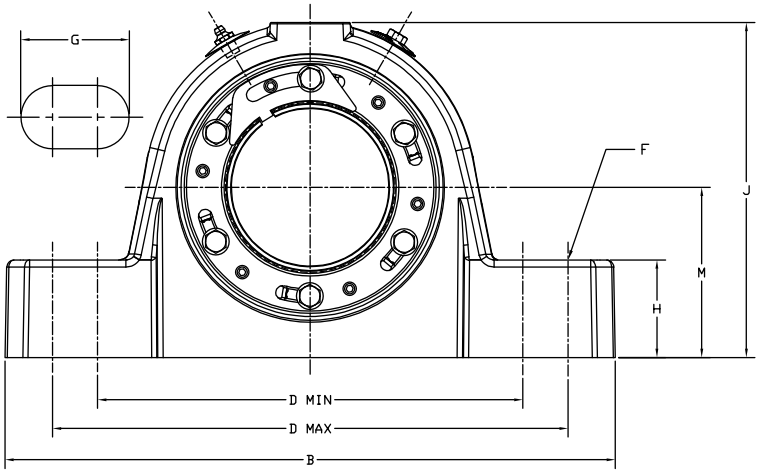

SIZES 311 THRU 400

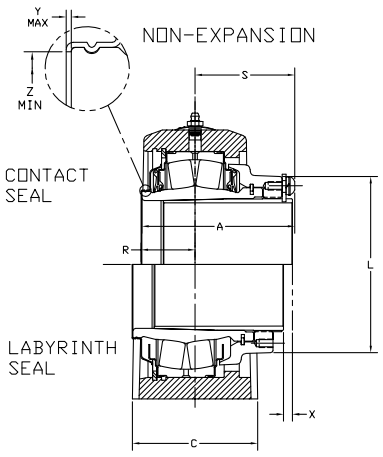

EXPANSION

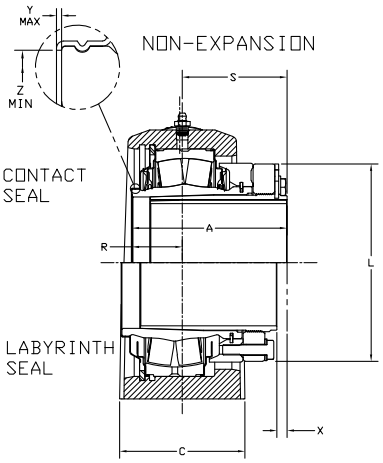

EXPANSION

IP pillow block – inch

2-bolt

Bearing series	Shaft size	Trident seal			
		Non-expansion		Expansion	
		Part number	Description	Part number	Description
22208	1-1/8	069400	P2B-IP-102R	069428	P2B-IP-102RE
	1-3/16	069401	P2B-IP-103R	069429	P2B-IP-103RE
	1-1/4	069402	P2B-IP-104R	069430	P2B-IP-104RE
	1-3/8	069403	P2B-IP-106R	069431	P2B-IP-106RE
	1-7/16	069404	P2B-IP-107R	069432	P2B-IP-107RE
	1-1/2	069405	P2B-IP-108R	069433	P2B-IP-108RE
22209	1- 5/8	069406	P2B-IP-110R	069434	P2B-IP-110RE
	1-11/16	069407	P2B-IP-111R	069435	P2B-IP-111RE
	1-3/4	069408	P2B-IP-112R	069436	P2B-IP-112RE
22210	1-7/8	069409	P2B-IP-114R	069437	P2B-IP-114RE
	1-15/16	069410	P2B-IP-115R	069438	P2B-IP-115RE
	2	069411	P2B-IP-200R	069439	P2B-IP-200RE
22211	2-3/16	069412	P2B-IP-203R	069440	P2B-IP-203RE
	2 -1/4	069413	P2B-IP-204R	069441	P2B-IP-204RE
22213	2-3/8	069414	P2B-IP-206R	069442	P2B-IP-206RE
	2-7/16	069415	P2B-IP-207R	069443	P2B-IP-207RE
	2-1/2	069416	P2B-IP-208R	069444	P2B-IP-208RE
22215	2-11/16	069417	P2B-IP-211R	069445	P2B-IP-211RE
	2-3/4	069418	P2B-IP-212R	069446	P2B-IP-212RE
	2-15/16	069419	P2B-IP-215R	069447	P2B-IP-215RE
	3	069420	P2B-IP-300R	069448	P2B-IP-300RE
22218	3-3/16	069421	P2B-IP-303R	069449	P2B-IP-303RE
	3-1/4	069422	P2B-IP-304R	069450	P2B-IP-304RE
	3-7/16	069423	P2B-IP-307R	069451	P2B-IP-307RE
	3-1/2	069424	P2B-IP-308R	069452	P2B-IP-308RE
22220*	3-11/16	069425	P2B-IP-311R	069453	P2B-IP-311RE
	3-15/16	069426	P2B-IP-315R	069454	P2B-IP-315RE
	4	069427	P2B-IP-400R	069455	P2B-IP-400RE

Bearing series	Shaft size	Labyrinth seal			
		Non-expansion		Expansion	
		Part number	Description	Part number	Description
22208	1-1/8	069456	P2B-IP-102L	069484	P2B-IP-102LE
	1-3/16	069457	P2B-IP-103L	069485	P2B-IP-103LE
	1-1/4	069458	P2B-IP-104L	069486	P2B-IP-104LE
	1-3/8	069459	P2B-IP-106L	069487	P2B-IP-106LE
	1-7/16	069460	P2B-IP-107L	069488	P2B-IP-107LE
	1-1/2	069461	P2B-IP-108L	069489	P2B-IP-108LE
22209	1- 5/8	069462	P2B-IP-110L	069490	P2B-IP-110LE
	1-11/16	069463	P2B-IP-111L	069491	P2B-IP-111LE
	1-3/4	069464	P2B-IP-112L	069492	P2B-IP-112LE
22210	1-7/8	069465	P2B-IP-114L	069493	P2B-IP-114LE
	1-15/16	069466	P2B-IP-115L	069494	P2B-IP-115LE
	2	069467	P2B-IP-200L	069495	P2B-IP-200LE
22211	2-3/16	069468	P2B-IP-203L	069496	P2B-IP-203LE
	2 -1/4	069469	P2B-IP-204L	069497	P2B-IP-204LE
22213	2-3/8	069470	P2B-IP-206L	069498	P2B-IP-206LE
	2-7/16	069471	P2B-IP-207L	069499	P2B-IP-207LE
	2-1/2	069472	P2B-IP-208L	069500	P2B-IP-208LE
22215	2-11/16	069473	P2B-IP-211L	069501	P2B-IP-211LE
	2-3/4	069474	P2B-IP-212L	069502	P2B-IP-212LE
	2-15/16	069475	P2B-IP-215L	069503	P2B-IP-215LE
	3	069476	P2B-IP-300L	069504	P2B-IP-300LE
22218	3-3/16	069477	P2B-IP-303L	069505	P2B-IP-303LE
	3-1/4	069478	P2B-IP-304L	069506	P2B-IP-304LE
	3-7/16	069479	P2B-IP-307L	069507	P2B-IP-307LE
	3-1/2	069480	P2B-IP-308L	069508	P2B-IP-308LE
22220*	3-11/16	069481	P2B-IP-311L	069509	P2B-IP-311LE
	3-15/16	069482	P2B-IP-315L	069510	P2B-IP-315LE
	4	069483	P2B-IP-400L	069511	P2B-IP-400LE

*Consult Dodge for sizes not listed.

Shaft size	A	B	C	D		F bolt dia.	G	H	J	L	M	R	S	X total exp.	Y	Z
				Min.	Max.											
1-1/8 1-3/16 1-1/4 1-3/8 1-7/16 1-1/2	2 .62	6.80	1 .95	4.81	5.20	1/2	0.81	1.13	3.88	2.72	1.88	0.88	1.75	3/16	0.02	1.80
1- 5/8 1-11/16 1-3/4	2.81	7.38	2.06	5.31	5.70	1/2	0.81	1.25	4.27	3.00	2.13	0.81	2.00	1/4	0.02	2.08
1-7/8 1-15/16 2	2.86	8.38	2.50	6.06	6.44	5/8	0.95	1.31	4.56	3.28	2.25	0.86	2.00	1/4	0.02	2.30
2-3/16 2 -1/4	3.00	8.88	2.63	6.56	6 .94	5/8	0.95	1.50	5.00	3.50	2.50	0.91	2.13	1/4	0.03	2.60
2-3/8 2 -7/16 2-1/2	3.42	9.25	2.86	6.94	7.31	5/8	0.95	1.63	5.59	3.88	2.75	1.20	2.22	1/4	0.03	2.95
2-11/16 2-3/4 2-15/16 3	3.50	10.44	3.08	7.94	8.31	3/4	1.06	1.88	6.38	4.28	3.25	1.23	2.27	1/4	0.03	3.47
3-3/16 3-1/4 3-7/16 3-1/2	4.17	13.00	3.42	9.38	10.63	7/8	1.63	2.25	7.50	5.00	3.75	1.48	2.69	1/4	0.03	4.05
3-11/16 3-15/16 4	4.70	15.25	3.91	10.63	12.80	1	2.25	2.44	8.38	5.56	4.25	1.64	3.06	5/16	0.03	4.50

IP pillow block – inch

2-bolt, E-dimensioned

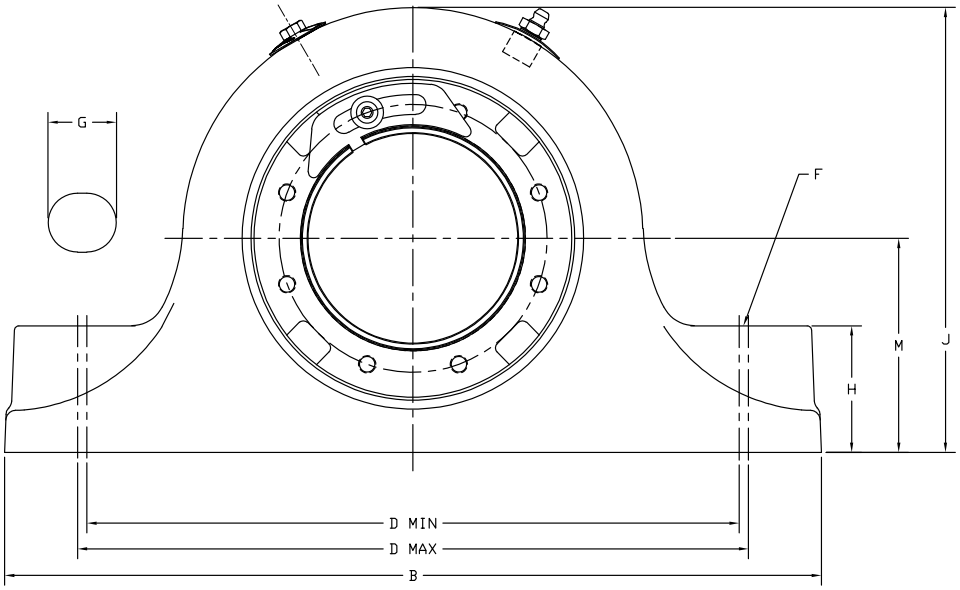

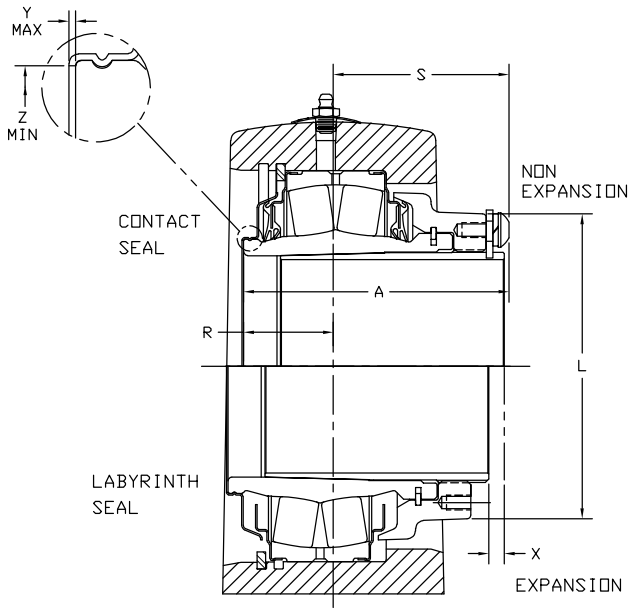

IP pillow block – inch

2-bolt, E-dimensioned

Bearing series	Shaft size	Trident seal			
		Part number	Description	Part number	Description
22208	1- 3/8	071120	EP2B-IP-106R	071141	EP2B-IP-106RE
	1-7/16	071121	EP2B-IP-107R	071142	EP2B-IP-107RE
22209	1-1/2	071122	EP2B-IP-108R	071143	EP2B-IP-108RE
	1-5/8	071123	EP2B-IP-110R	071144	EP2B-IP-110RE
	1-11/16	071124	EP2B-IP-111R	071145	EP2B-IP-111RE
22210	1-3/4	071125	EP2B-IP-112R	071146	EP2B-IP-112RE
	1-7/8	071126	EP2B-IP-114R	071147	EP2B-IP-114RE
	1-15/16	071127	EP2B-IP-115R	071148	EP2B-IP-115RE
	2	071128	EP2B-IP-200R	071149	EP2B-IP-200RE
22211	2-3/16	071129	EP2B-IP-203R	071150	EP2B-IP-203RE
22213	2-1/4	071130	EP2B-IP-204R	071151	EP2B-IP-204RE
	2-7/16	071131	EP2B-IP-207R	071152	EP2B-IP-207RE
	2-1/2	071132	EP2B-IP-208R	071153	EP2B-IP-208RE
22215	2-11/16	071133	EP2B-IP-211R	071154	EP2B-IP-211RE
	2-3/4	071134	EP2B-IP-212R	071155	EP2B-IP-212RE
	2-15/16	071135	EP2B-IP-215R	071156	EP2B-IP-215RE
	3	071136	EP2B-IP-300R	071157	EP2B-IP-300RE
22218	3-3/16	071137	EP2B-IP-303R	071158	EP2B-IP-303RE
	3-1/4	071138	EP2B-IP-304R	071159	EP2B-IP-304RE
	3-7/16	071139	EP2B-IP-307R	071160	EP2B-IP-307RE
	3-1/2	071140	EP2B-IP-308R	071161	EP2B-IP-308RE

Bearing series	Shaft size	Labyrinth seal			
		Part number	Description	Part number	Description
22208	1- 3/8	071162	EP2B-IP-106L	071183	EP2B-IP-106LE
	1-7/16	071163	EP2B-IP-107L	071184	EP2B-IP-107LE
22209	1-1/2	071164	EP2B-IP-108L	071185	EP2B-IP-108LE
	1-5/8	071165	EP2B-IP-110L	071186	EP2B-IP-110LE
	1-11/16	071166	EP2B-IP-111L	071187	EP2B-IP-111LE
22210	1-3/4	071167	EP2B-IP-112L	071188	EP2B-IP-112LE
	1-7/8	071168	EP2B-IP-114L	071189	EP2B-IP-114LE
	1-15/16	071169	EP2B-IP-115L	071190	EP2B-IP-115LE
	2	071170	EP2B-IP-200L	071191	EP2B-IP-200LE
22211	2-3/16	071171	EP2B-IP-203L	071192	EP2B-IP-203LE
22213	2-1/4	071172	EP2B-IP-204L	071193	EP2B-IP-204LE
	2-7/16	071173	EP2B-IP-207L	071194	EP2B-IP-207LE
	2-1/2	071174	EP2B-IP-208L	071195	EP2B-IP-208LE
22215	2-11/16	071175	EP2B-IP-211L	071196	EP2B-IP-211LE
	2-3/4	071176	EP2B-IP-212L	071197	EP2B-IP-212LE
	2-15/16	071177	EP2B-IP-215L	071198	EP2B-IP-215LE
	3	071178	EP2B-IP-300L	071199	EP2B-IP-300LE
22218	3-3/16	071179	EP2B-IP-303L	071200	EP2B-IP-303LE
	3-1/4	071180	EP2B-IP-304L	071201	EP2B-IP-304LE
	3-7/16	071181	EP2B-IP-307L	071202	EP2B-IP-307LE
	3-1/2	071182	EP2B-IP-308L	071203	EP2B-IP-308LE

*Consult Dodge for sizes not listed.

Shaft size	A	B #	C #	D		F bolt dia.	G #	H #	J #	L	M	R	S	X total exp.	Y	Z
				Min.	Max.											
1-3/8	2.63	7.37	2.12	5.63	5.88	1/2	0.75	1.13	3.85	2.72	1.875	1.04	1.59	5/32	0.02	1.80
1-7/16																
1-1/2	2.81	7.88	2.38	6.13	6.38	1/2	0.75	1.25	4.25	3.00	2.125	0.98	1.83	3/16	0.02	2.08
1-5/8																
1-11/16																
1-3/4	2.86	8.87	2.49	6.88	7.12	5/8	0.88	1.31	4.47	3.28	2.250	1.10	1.76	7/32	0.02	2.30
1-7/8																
1-15/16																
2																
2-3/16	3.03	9.62	2.56	7.63	7.88	5/8	0.88	1.50	5.00	3.50	2.500	1.06	1.97	1/4	0.025	2.60
2-1/4	3.42	10.50	2.87	8.38	8.62	5/8	0.88	1.63	5.71	3.88	2.750	1.20	2.22	1/4	0.025	2.95
2-7/16																
2-1/2																
2-11/16	3.50	12.00	2.99	9.31	9.69	3/4	1.07	1.88	6.32	4.28	3.125	1.35	2.15	1/4	0.025	3.47
2-3/4																
2-15/16																
3																
3-3/16	4.17	14.00	3.49	10.81	11.19	7/8	1.19	2.25	7.69	5.00	3.750	1.51	2.66	1/4	0.025	4.05
3-1/4																
3-7/16																
3-1/2																

"A" and "R" dimensions do not include "Y" dimension.

Reference dimension only.

IP pillow block – inch

2-bolt, steel (HD)

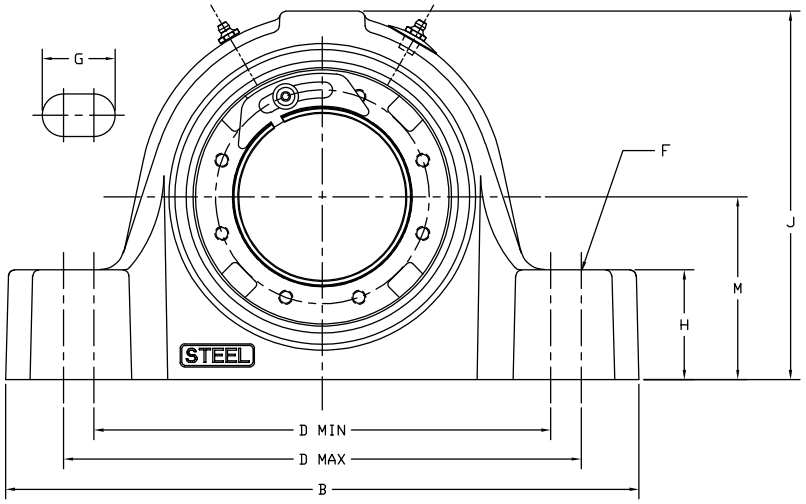

SIZES 102 THRU 308

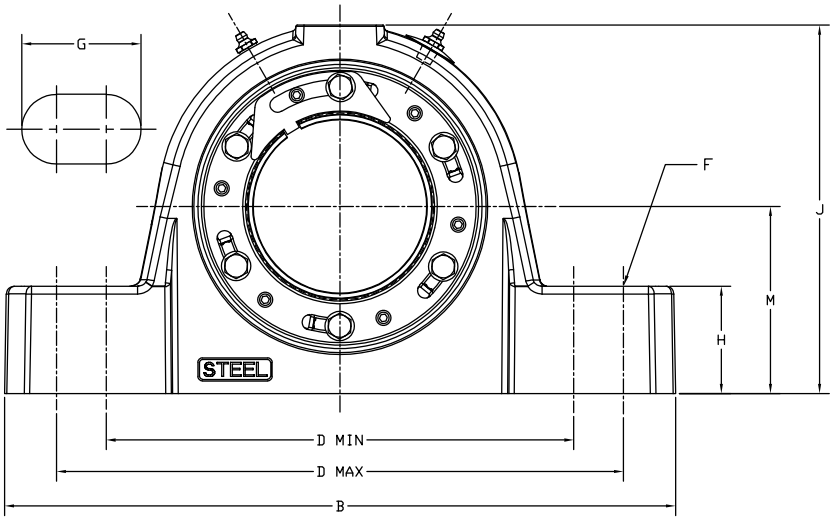

SIZES 311 THRU 400

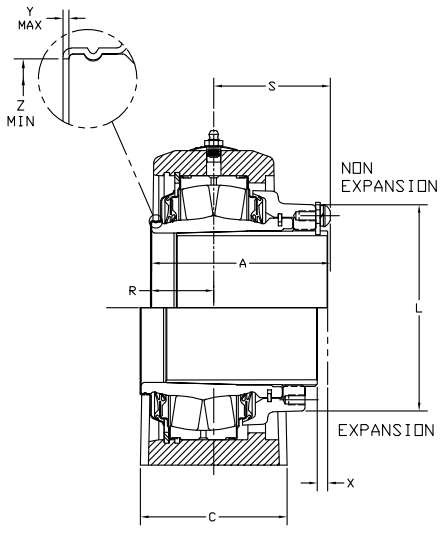

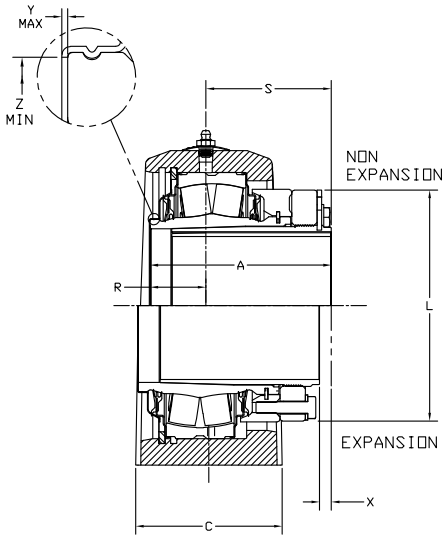

IP pillow block – inch

2-bolt, steel (HD)

Shaft size	Non-expansion		Expansion	
	Part number	Description	Part number	Description
1-1/8	071650	SP2B-IP-102R	071678	SP2B-IP-102RE
1-3/16	071651	SP2B-IP-103R	071679	SP2B-IP-103RE
1-1/4	071652	SP2B-IP-104R	071680	SP2B-IP-104RE
1-3/8	071653	SP2B-IP-106R	071681	SP2B-IP-106RE
1-7/16	071654	SP2B-IP-107R	071682	SP2B-IP-107RE
1-1/2	071655	SP2B-IP-108R	071683	SP2B-IP-108RE
1-5/8	071656	SP2B-IP-110R	071684	SP2B-IP-110RE
1-11/16	071657	SP2B-IP-111R	071685	SP2B-IP-111RE
1-3/4	071658	SP2B-IP-112R	071686	SP2B-IP-112RE
1-7/8	071659	SP2B-IP-114R	071687	SP2B-IP-114RE
1-15/16	071660	SP2B-IP-115R	071688	SP2B-IP-115RE
2	071661	SP2B-IP-200R	071689	SP2B-IP-200RE
2-3/16	071662	SP2B-IP-203R	071690	SP2B-IP-203RE
2-1/4	071663	SP2B-IP-204R	071691	SP2B-IP-204RE
2-3/8	071664	SP2B-IP-206R	071692	SP2B-IP-206RE
2-7/16	071665	SP2B-IP-207R	071693	SP2B-IP-207RE
2-1/2	071666	SP2B-IP-208R	071694	SP2B-IP-208RE
2-11/16	071667	SP2B-IP-211R	071695	SP2B-IP-211RE
2-3/4	071668	SP2B-IP-212R	071696	SP2B-IP-212RE
2-15/16	071669	SP2B-IP-215R	071697	SP2B-IP-215RE
3	071670	SP2B-IP-300R	071698	SP2B-IP-300RE
3-3/16	071671	SP2B-IP-303R	071699	SP2B-IP-303RE
3-1/4	071672	SP2B-IP-304R	071700	SP2B-IP-304RE
3-7/16	071673	SP2B-IP-307R	071701	SP2B-IP-307RE
3-1/2	071674	SP2B-IP-308R	071702	SP2B-IP-308RE
3-11/16	071675	SP2B-IP-311R	071703	SP2B-IP-311RE
3-15/16	071676	SP2B-IP-315R	071704	SP2B-IP-315RE
4	071677	SP2B-IP-400R	071705	SP2B-IP-400RE

*Consult Dodge for sizes not listed.

Shaft size	A	B	C	D		F	G	H	J	L	M	R	S	X	Y	Z
				Min.	Max.	bolt dia.								total exp.		
1-1/8 1-3/16 1-1/4 1-3/8 1-7/16 1-1/2	2.62	6.88	2.25	4.69	6.00	1/2	1.28	1.12	3.88	2.72	1.88	0.86	1.77	3/16	0.02	1.80
1-5/8 1-11/16 1-3/4	2.80	7.13	2.37	5.25	5.75	1/2	0.87	1.25	4.27	3.00	2.12	0.92	1.89	1/4	0.02	2.09
1-7/8 1-15/16 2	2.85	8.38	2.44	5.93	6.36	5/8	0.97	1.31	4.56	3.28	2.25	0.90	1.96	1/4	0.02	2.30
2-3/16 2-1/4	3.04	8.88	2.50	6.50	7.06	5/8	1.04	1.50	5.00	3.50	2.50	0.99	2.04	1/4	0.03	2.60
2-3/8 2-7/16 2-1/2	3.43	9.25	2.90	6.81	7.43	5/8	1.07	1.62	5.59	3.88	2.75	1.17	2.25	1/4	0.03	2.95
2-11/16 2-3/4 2-15/16 3	3.49	10.44	2.91	7.70	8.40	3/4	1.23	1.88	6.38	4.28	3.25	1.12	2.37	1/4	0.03	3.47
3-3/16 3-1/4 3-7/16 3-1/2	4.17	13.00	3.42	9.25	10.75	7/8	1.75	2.25	7.50	5.00	3.75	1.53	2.63	1/4	0.03	4.05
3-11/16 3-15/16 4	4.70	14.25	3.89	10.04	12.60	1	2.40	2.44	8.38	6.15	4.25	1.70	3.00	5/16	0.03	4.51

"A" and "R" dimensions do not include "Y" dimension.

IP pillow block – inch

2-bolt, E-dimensioned steel (HD)

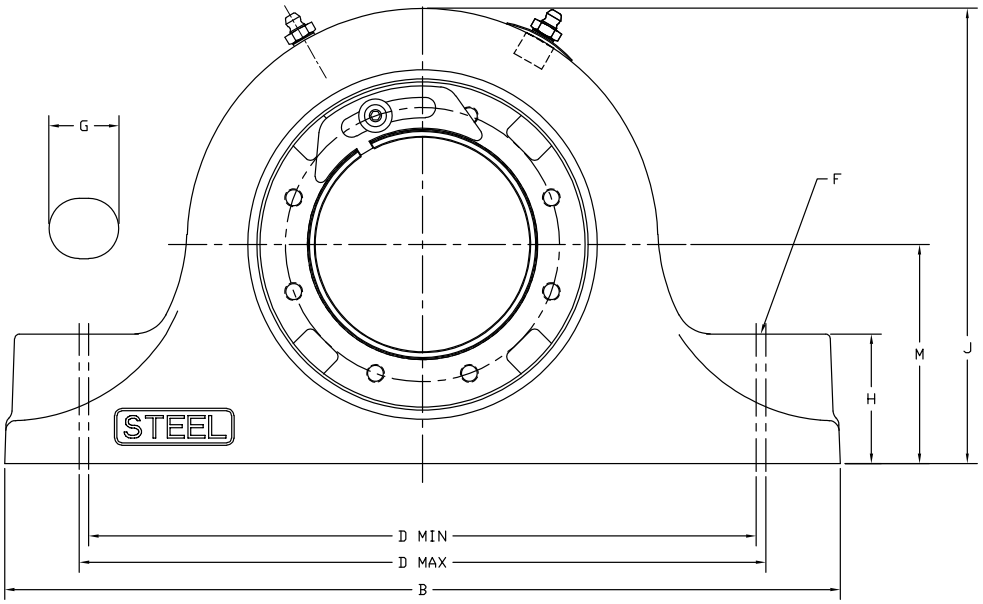

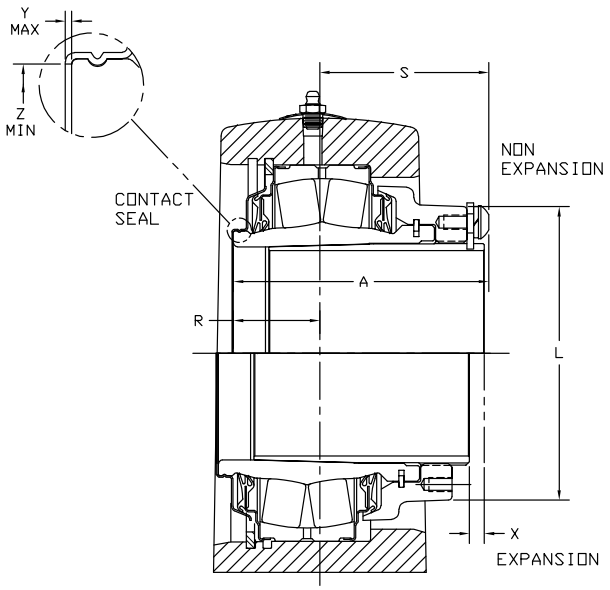

IP pillow block – inch

2-bolt, E-dimensioned steel (HD)

Non-expansion*

Shaft size	Part number	Description
1-3/8	071864	SEP2B-IP-106R
1-7/16	071865	SEP2B-IP-107R
1-1/2	071866	SEP2B-IP-108R
1-5/8	071867	SEP2B-IP-110R
1-11/16	071868	SEP2B-IP-111R
1-3/4	071869	SEP2B-IP-112R
1-7/8	071870	SEP2B-IP-114R
1-15/16	071871	SEP2B-IP-115R
2	071872	SEP2B-IP-200R
2-3/16	071873	SEP2B-IP-203R
2-1/4	071874	SEP2B-IP-204R
2-7/16	071875	SEP2B-IP-207R
2-1/2	071876	SEP2B-IP-208R
2-11/16	071877	SEP2B-IP-211R
2-3/4	071878	SEP2B-IP-212R
2-15/16	071879	SEP2B-IP-215R
3	071880	SEP2B-IP-300R
3-3/16	071881	SEP2B-IP-303R
3-1/4	071882	SEP2B-IP-304R
3-7/16	071883	SEP2B-IP-307R
3-1/2	071884	SEP2B-IP-308R

Expansion

Shaft size	Part number	Description
1-3/8	071885	SEP2B-IP-106RE
1-7/16	071886	SEP2B-IP-107RE
1-1/2	071887	SEP2B-IP-108RE
1-5/8	071888	SEP2B-IP-110RE
1-11/16	071889	SEP2B-IP-111RE
1-3/4	071890	SEP2B-IP-112RE
1-7/8	071891	SEP2B-IP-114RE
1-15/16	071892	SEP2B-IP-115RE
2	071893	SEP2B-IP-200RE
2-3/16	071894	SEP2B-IP-203RE
2-1/4	071895	SEP2B-IP-204RE
2-7/16	071896	SEP2B-IP-207RE
2-1/2	071897	SEP2B-IP-208RE
2-11/16	071898	SEP2B-IP-211RE
2-3/4	071899	SEP2B-IP-212RE
2-15/16	071900	SEP2B-IP-215RE
3	071901	SEP2B-IP-300RE
3-3/16	071902	SEP2B-IP-303RE
3-1/4	071903	SEP2B-IP-304RE
3-7/16	071904	SEP2B-IP-307RE
3-1/2	071905	SEP2B-IP-308RE

*Consult Dodge for sizes not listed.

Shaft size	A	B	C	D		F bolt dia.	G	H	J	L	M	R	S	X total exp.	Y	Z
				Min.	Max.											
1-3/8 1-7/16	2.63	6.88	2.25	4.69	5.88	1/2	1.22	1.13	3.85	2.72	1.875	1.04	1.59	5/32	0.02	1.80
1-1/2 1-5/8 1-11/16	2.81	7.88	2.38	5.70	6.50	1/2	1.02	1.25	4.25	3.00	2.125	0.96	1.83	3/16	0.02	2.08
1-3/4 1-7/8 1-15/16 2	2.86	8.87	2.44	6.00	7.12	5/8	1.32	1.31	4.47	3.28	2.250	1.10	1.76	3/32	0.02	2.30
2-3/16	3.03	9.62	2.50	6.50	7.88	5/8	1.45	1.50	5.00	3.50	2.500	1.06	1.97	1/4	0.03	2.60
2-1/4 2-7/16 2-1/2	3.42	10.25	2.90	6.88	9.62	5/8	1.63	1.63	5.71	3.88	2.75	1.20	2.22	1/4	0.03	2.95
2-11/16 2-3/4 2-15/16 3	3.50	11.63	2.91	7.88	8.62	3/4	1.75	1.88	6.32	4.28	3.125	1.35	2.15	1/4	0.03	3.47
3-3/16 3-1/4 3-7/16 3-1/2	4.17	13.5	3.41	9.38	11.25	7/8	1.94	2.25	7.69	5.00	3.75	1.51	2.66	1/4	0.03	4.05

"A" and "R" dimensions do not include "Y" dimension.

IP pillow block – inch

4-bolt

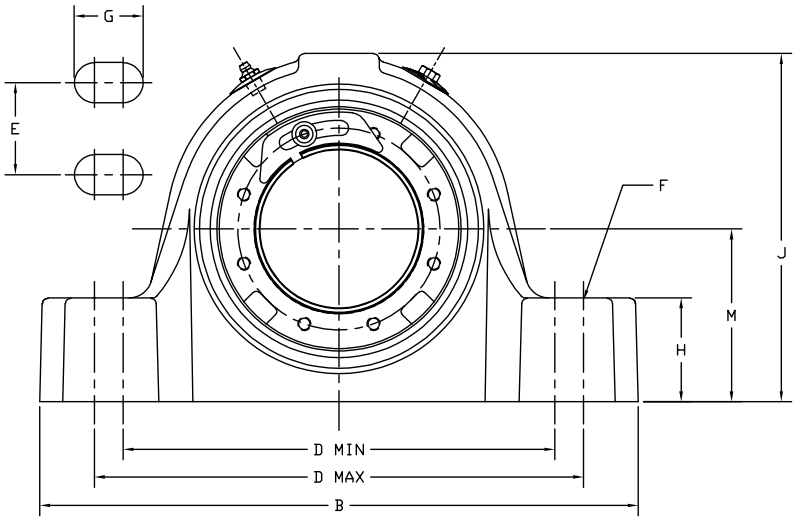

SIZES 206 THRU 308

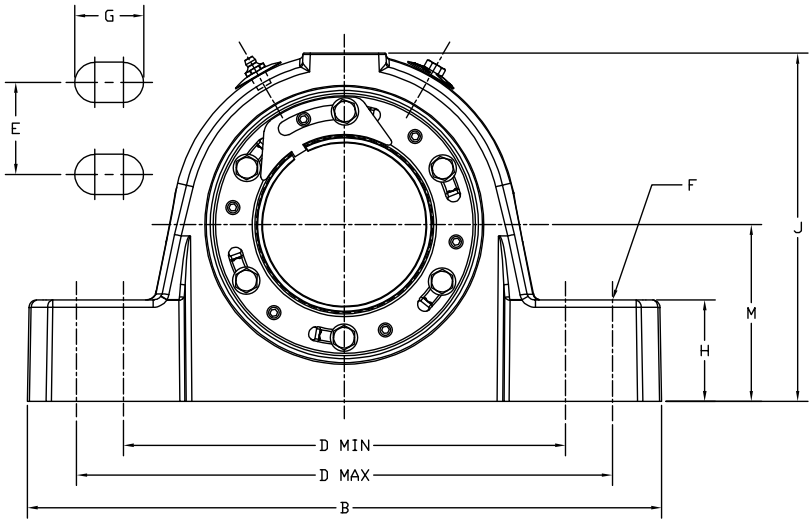

SIZES 311 THRU 500

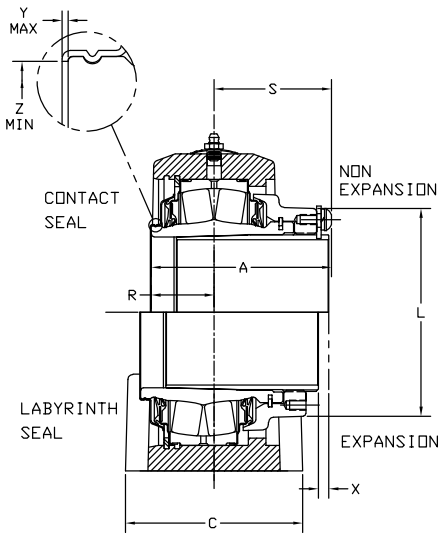

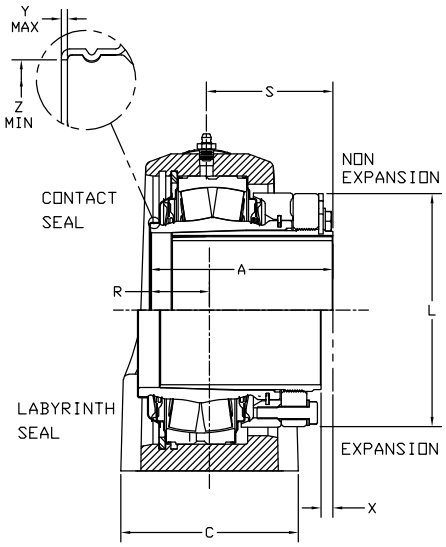

IP pillow block – inch

4-bolt

Bearing series	Shaft size	Trident seal			
		Non-expansion		Expansion	
		Part number	Description	Part number	Description
22213	2-3/8	069520	P4B-IP-206R	069538	P4B-IP-206RE
	2-7/16	069521	P4B-IP-207R	069539	P4B-IP-207RE
	2-1/2	069522	P4B-IP-208R	069540	P4B-IP-208RE
22215	2-11/16	069523	P4B-IP-211R	069541	P4B-IP-211RE
	2-3/4	069524	P4B-IP-212R	069542	P4B-IP-212RE
	2-15/16	069525	P4B-IP-215R	069543	P4B-IP-215RE
	3	069526	P4B-IP-300R	069544	P4B-IP-300RE
22218	3-3/16	069527	P4B-IP-303R	069545	P4B-IP-303RE
	3-1/4	069528	P4B-IP-304R	069546	P4B-IP-304RE
	3-7/16	069529	P4B-IP-307R	069547	P4B-IP-307RE
	3-1/2	069530	P4B-IP-308R	069548	P4B-IP-308RE
22220	3-11/16	069531	P4B-IP-311R	069549	P4B-IP-311RE
	3-15/16	069532	P4B-IP-315R	069550	P4B-IP-315RE
	4	069533	P4B-IP-400R	069551	P4B-IP-400RE
22222	4-7/16	069534	P4B-IP-407R	069552	P4B-IP-407RE
	4-1/2	069535	P4B-IP-408R	069553	P4B-IP-408RE
22226	4-15/16	069536	P4B-IP-415R	069554	P4B-IP-415RE
	5	069537	P4B-IP-500R	069555	P4B-IP-500RE

*Consult Dodge for sizes not listed.

Bearing series	Shaft size	Labyrinth seal			
		Non-expansion		Expansion	
		Part number	Description	Part number	Description
22213	2-3/8	069556	P4B-IP-206L	069574	P4B-IP-206LE
	2-7/16	069557	P4B-IP-207L	069575	P4B-IP-207LE
	2-1/2	069558	P4B-IP-208L	069576	P4B-IP-208LE
22215	2-11/16	069559	P4B-IP-211L	069577	P4B-IP-211LE
	2-3/4	069560	P4B-IP-212L	069578	P4B-IP-212LE
	2-15/16	069561	P4B-IP-215L	069579	P4B-IP-215LE
	3	069562	P4B-IP-300L	069580	P4B-IP-300LE
22218	3-3/16	069563	P4B-IP-303L	069581	P4B-IP-303LE
	3-1/4	069564	P4B-IP-304L	069582	P4B-IP-304LE
	3-7/16	069565	P4B-IP-307L	069583	P4B-IP-307LE
	3-1/2	069566	P4B-IP-308L	069584	P4B-IP-308LE
22220	3-11/16	069567	P4B-IP-311L	069585	P4B-IP-311LE
	3-15/16	069568	P4B-IP-315L	069586	P4B-IP-315LE
	4	069569	P4B-IP-400L	069587	P4B-IP-400LE
22222	4-7/16	069570	P4B-IP-407L	069588	P4B-IP-407LE
	4-1/2	069571	P4B-IP-408L	069589	P4B-IP-408LE
22226	4-15/16	069572	P4B-IP-415L	069590	P4B-IP-415LE
	5	069573	P4B-IP-500L	069591	P4B-IP-500LE

Shaft size	A	B	C	D		E	F bolt dia.	G	H	J	L	M	R	S	X total exp.	Y	Z
				Min.	Max.												
2-3/8																	
2-7/16	3.42	9.25	3.28	6.94	7.31	1.75	1/2	0.81	1.63	5.59	3.88	2.75	1.09	2.34	1/4	0.03	2.95
2-1/2																	
2-11/16																	
2-3/4																	
2-15/16	3.49	10.44	3.75	7.94	8.31	1.88	5/8	0.94	1.88	6.44	4.28	3.25	1.12	2.37	1/4	0.03	3.47
3																	
3-3/16																	
3-1/4																	
3-7/16	4.16	13.00	4.12	9.38	10.63	2.00	3/4	1.50	2.25	7.56	5.00	3.75	1.43	2.73	1/4	0.03	4.05
3-1/2																	
3-11/16																	
3-15/16	4.70	15.25	4.50	12.12	12.88	2.25	3/4	1.25	2.44	8.44	6.15	4.25	1.65	3.06	5/16	0.03	4.51
4																	
4-7/16	5.23	16.50	4.75	13.00	14.00	2.50	3/4	1.38	2.75	9.63	6.93	4.75	1.75	3.48	3/8	0.04	5.01
4-1/2																	
4-15/16	5.98	18.62	5.38	15.00	16.00	2.75	7/8	1.50	3.00	11.12	8.03	5.50	1.91	4.08	3/8	0.04	5.86
5																	

"A" and "R" dimensions do not include "Y" dimension.

IP pillow block – inch

4-bolt, E-dimensioned

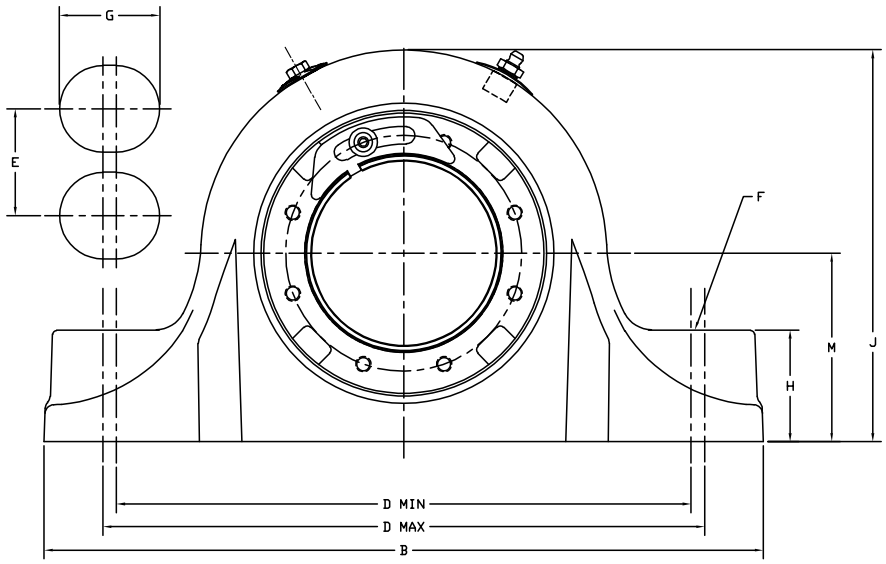

SIZES 204 THRU 308

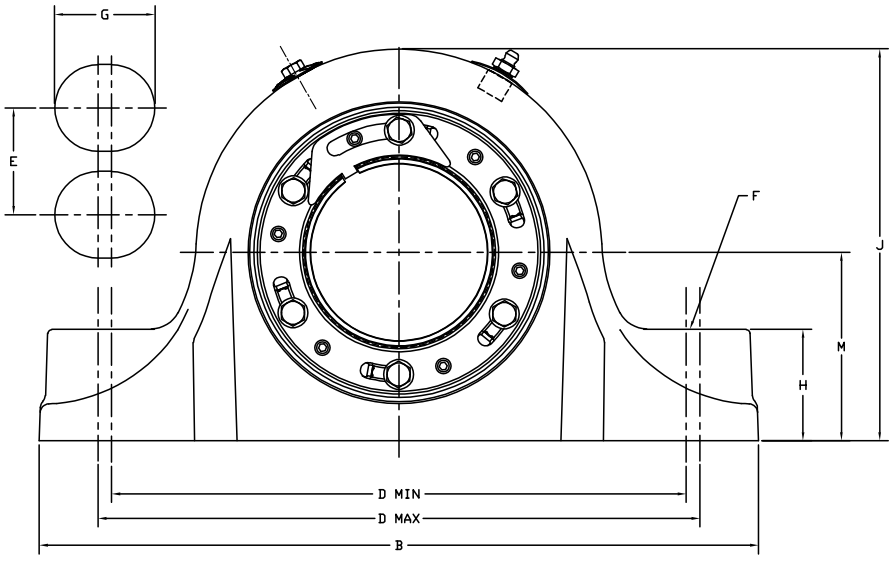

SIZES 315 THRU 700

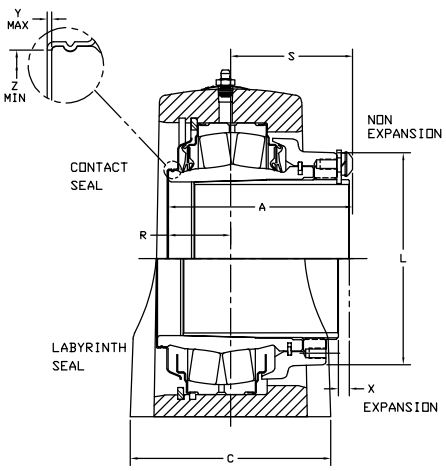

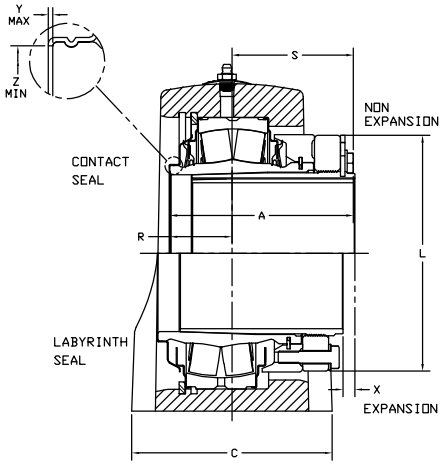

IP pillow block – inch

4-bolt, E-dimensioned

Bearing series	Shaft size	Trident seal			
		Non-expansion		Expansion	
		Part number	Description	Part number	Description
22213	2-1/4	071204	EP4B-IP-204R	071221	EP4B-IP-204RE
	2-7/16	071205	EP4B-IP-207R	071222	EP4B-IP-207RE
	2-1/2	071206	EP4B-IP-208R	071223	EP4B-IP-208RE
22215	2-11/16	071207	EP4B-IP-211R	071224	EP4B-IP-211RE
	2-3/4	071208	EP4B-IP-212R	071225	EP4B-IP-212RE
	2-15/16	071209	EP4B-IP-215R	071226	EP4B-IP-215RE
	3	071210	EP4B-IP-300R	071227	EP4B-IP-300RE
22218	3-3/16	071211	EP4B-IP-303R	071228	EP4B-IP-303RE
	3-1/4	071212	EP4B-IP-304R	071229	EP4B-IP-304RE
	3-7/16	071213	EP4B-IP-307R	071230	EP4B-IP-307RE
	3-1/2	071214	EP4B-IP-308R	071231	EP4B-IP-308RE
22220	3-15/16	071215	EP4B-IP-315R	071232	EP4B-IP-315RE
	4	071216	EP4B-IP-400R	071233	EP4B-IP-400RE
22222	4-7/16	071217	EP4B-IP-407R	071234	EP4B-IP-407RE
	4-1/2	071218	EP4B-IP-408R	071235	EP4B-IP-408RE
22226	4-15/16	071219	EP4B-IP-415R	071236	EP4B-IP-415RE
	5	071220	EP4B-IP-500R	071237	EP4B-IP-500RE
22228	5-7/16	071610	EP4B-IP-507R	071618	EP4B-IP-507RE
	5-1/2	071611	EP4B-IP-508R	071619	EP4B-IP-508RE
22232	5-15/16	071612	EP4B-IP-515R	071620	EP4B-IP-515RE
	6	071613	EP4B-IP-600R	071621	EP4B-IP-600RE
22236	6-7/16	071614	EP4B-IP-607R	071622	EP4B-IP-607RE
	6-1/2	071615	EP4B-IP-608R	071623	EP4B-IP-608RE
	6-15/16	071616	EP4B-IP-615R	071624	EP4B-IP-615RE
	7	071617	EP4B-IP-700R	071625	EP4B-IP-700RE

*Consult Dodge for sizes not listed.

Bearing series	Shaft size	Labyrinth seal			
		Non-expansion		Expansion	
		Part number	Description	Part number	Description
22213	2-1/4	071238	EP4B-IP-204L	071255	EP4B-IP-204LE
	2-7/16	071239	EP4B-IP-207L	071256	EP4B-IP-207LE
	2-1/2	071240	EP4B-IP-208L	071257	EP4B-IP-208LE
22215	2-11/16	071241	EP4B-IP-211L	071258	EP4B-IP-211LE
	2-3/4	071242	EP4B-IP-212L	071259	EP4B-IP-212LE
	2-15/16	071243	EP4B-IP-215L	071260	EP4B-IP-215LE
	3	071244	EP4B-IP-300L	071261	EP4B-IP-300LE
22218	3-3/16	071245	EP4B-IP-303L	071262	EP4B-IP-303LE
	3-1/4	071246	EP4B-IP-304L	071263	EP4B-IP-304LE
	3-7/16	071247	EP4B-IP-307L	071264	EP4B-IP-307LE
	3-1/2	071248	EP4B-IP-308L	071265	EP4B-IP-308LE
22220	3-15/16	071249	EP4B-IP-315L	071266	EP4B-IP-315LE
	4	071250	EP4B-IP-400L	071267	EP4B-IP-400LE
22222	4-7/16	071251	EP4B-IP-407L	071268	EP4B-IP-407LE
	4-1/2	071252	EP4B-IP-408L	071269	EP4B-IP-408LE
22226	4-15/16	071253	EP4B-IP-415L	071270	EP4B-IP-415LE
	5	071254	EP4B-IP-500L	071271	EP4B-IP-500LE
22228	5-7/16	071626	EP4B-IP-507L	071634	EP4B-IP-507LE
	5-1/2	071627	EP4B-IP-508L	071635	EP4B-IP-508LE
22232	5-15/16	071628	EP4B-IP-515L	071636	EP4B-IP-515LE
	6	071629	EP4B-IP-600L	071637	EP4B-IP-600LE
22236	6-7/16	071630	EP4B-IP-607L	071638	EP4B-IP-607LE
	6-1/2	071631	EP4B-IP-608L	071639	EP4B-IP-608LE
	6-15/16	071632	EP4B-IP-615L	071640	EP4B-IP-615LE
	7	071633	EP4B-IP-700L	071641	EP4B-IP-700LE

Shaft size	A	B #	C #	D		E	F bolt dia.	G #	H #	J #	L	M	R	S	X total exp.	Y	Z
				Min.	Max.												
2-1/4 2-7/16 2-1/2	3.42	10.50	3.49	8.31	8.69	1.87	5/8	0.87	1.63	5.72	3.88	2.75	1.21	2.21	1/4	0.03	2.94
2-11/16 2-3/4 2-15/16 3	3.50	12.00	4.00	9.18	9.82	2.13	5/8	1.00	1.88	6.33	4.28	3.125	1.35	2.15	1/4	0.03	3.47
3-3/16 3-1/4 3-7/16 3-1/2	4.17	13.50	4.49	10.75	11.25	2.37	3/4	1.13	2.25	7.69	5.00	3.75	1.54	2.67	1/4	0.03	4.05
3-15/16 4	4.70	15.25	4.50	12.25	12.75	2.25	3/4	1.13	2.44	8.70	5.56	4.25	1.35	3.35	5/16	0.03	4.50
4-7/16 4-1/2	5.23	16.63	4.63	13.25	13.75	2.50	3/4	1.13	2.75	9.67	6.44	4.75	1.82	3.41	3/8	0.04	5.00
4-15/16 5	5.98	18.50	5.13	15.25	15.75	2.87	7/8	1.25	3.00	11.16	7.63	5.50	1.93	4.05	3/8	0.04	5.84
5-7/16 5-1/2	6.17	22	6.25	17.38	19.12	3.75	1	2.00	3.25	13.19	8.75	6.69	1.39	4.77	3/8	0.04	5.92
5-15/16 6	7.08	22	6.25	17.38	19.12	3.75	1	2.00	3.25	13.19	10.25	6.69	2.66	4.42	3/8	0.04	7.02
6-7/16 6-1/2 6-15/16 7	7.39	26	7.12	21.25	23.25	4.62	1	2.00	3.69	14.94	11.41	7.50	2.46	4.94	23/64	0.04	7.89

"A" and "R" dimensions do not include "Y" dimension.

Reference dimension only.

IP pillow block – inch

4-bolt, steel (HD)

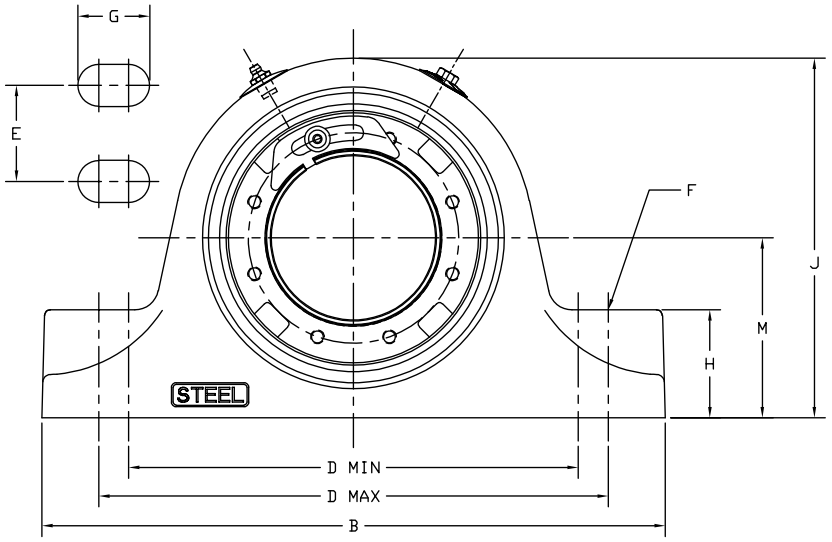

SIZES 206 THRU 308

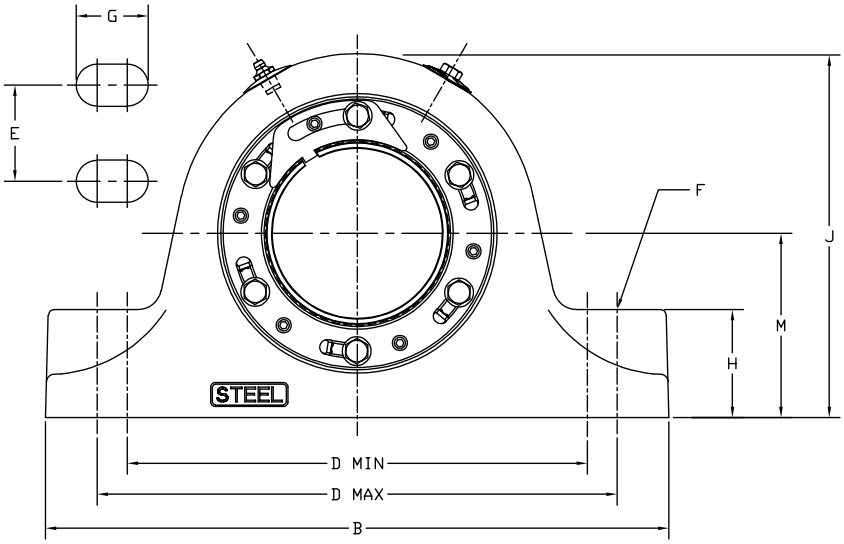

SIZES 311 THRU 500

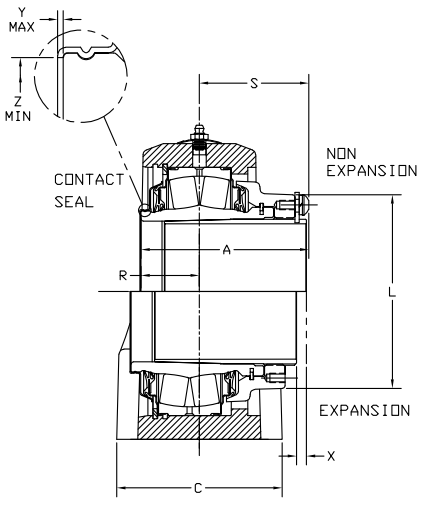

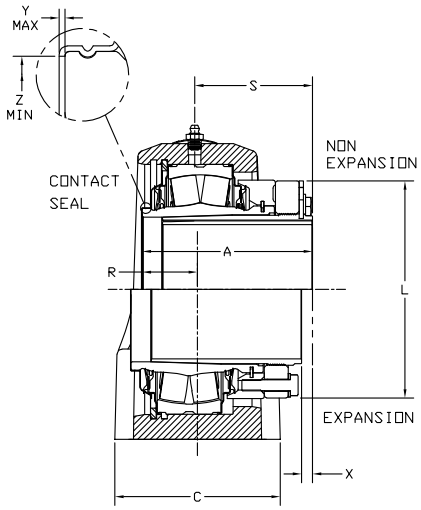

IP pillow block – inch

4-bolt, steel (HD)

Non-expansion

Shaft size	Part number	Description
2-3/8	071706	SP4B-IP-206R
2-7/16	071707	SP4B-IP-207R
2-1/2	071708	SP4B-IP-208R
2-11/16	071709	SP4B-IP-211R
2-3/4	071710	SP4B-IP-212R
2-15/16	071711	SP4B-IP-215R
3	071712	SP4B-IP-300R
3-3/16	071713	SP4B-IP-303R
3-1/4	071714	SP4B-IP-304R
3-7/16	071715	SP4B-IP-307R
3-1/2	071716	SP4B-IP-308R
3-11/16	071717	SP4B-IP-311R
3-15/16	071718	SP4B-IP-315R
4	071719	SP4B-IP-400R
4-7/16	071720	SP4B-IP-407R
4-1/2	071721	SP4B-IP-408R
4-15/16	071722	SP4B-IP-415R
5	071723	SP4B-IP-500R

Expansion

Shaft size	Part number	Description
2-3/8	071724	SP4B-IP-206RE
2-7/16	071725	SP4B-IP-207RE
2-1/2	071726	SP4B-IP-208RE
2-11/16	071727	SP4B-IP-211RE
2-3/4	071728	SP4B-IP-212RE
2-15/16	071729	SP4B-IP-215RE
3	071730	SP4B-IP-300RE
3-3/16	071731	SP4B-IP-303RE
3-1/4	071732	SP4B-IP-304RE
3-7/16	071733	SP4B-IP-307RE
3-1/2	071734	SP4B-IP-308RE
3-11/16	071735	SP4B-IP-311RE
3-15/16	071736	SP4B-IP-315RE
4	071737	SP4B-IP-400RE
4-7/16	071738	SP4B-IP-407RE
4-1/2	071739	SP4B-IP-408RE
4-15/16	071740	SP4B-IP-415RE
5	071741	SP4B-IP-500RE

*Consult Dodge for sizes not listed.

Shaft size	A	B	C	D		E	F bolt dia.	G	H	J	L	M	R	S	X total exp.	Y	Z
				Min.	Max.												
2-3/8																	
2-7/16	3.43	9.25	3.00	6.88	7.63	1.75	1/2	1.06	1.62	5.61	3.88	2.75	1.17	2.25	1/4	0.03	2.95
2-1/2																	
2-11/16																	
2-3/4	3. 49	10.44	3.13	7.60	9.10	1.88	5/8	1.43	1.88	6.44	4.28	3.25	1.12	2.37	1/4	0.03	3.47
2-15/16																	
3																	
3-3/16																	
3-1/4	4.16	12.30	3.75	8.88	10.88	2.00	3/4	1.88	2.25	7.56	5.00	3.75	1.53	2.63	1/4	0.03	4.05
3-7/16																	
3-1/2																	
3-11/16																	
3-15/16	4.70	14.88	4.31	10.88	13.38	2.25	3/4	2.13	2.44	8.70	6.15	4.25	1.70	3.00	5/16	0.03	4.51
4																	
4-7/16	5.23	16.13	4.75	11.88	14.50	2.50	3/4	2.19	2.75	9.67	6.93	4.75	1.53	3.70	3/8	0.04	5.01
4-1/2																	
4-15/16	5.98	17.50	5.03	15.13	15.88	2.75	7/8	1.37	3.00	11.12	8.03	5.50	2.22	3.77	3/8	0.04	5.86
5																	

"A" and "R" dimensions do not include "Y" dimension.

IP pillow block – inch

4-bolt, E-dimensioned steel (HD)

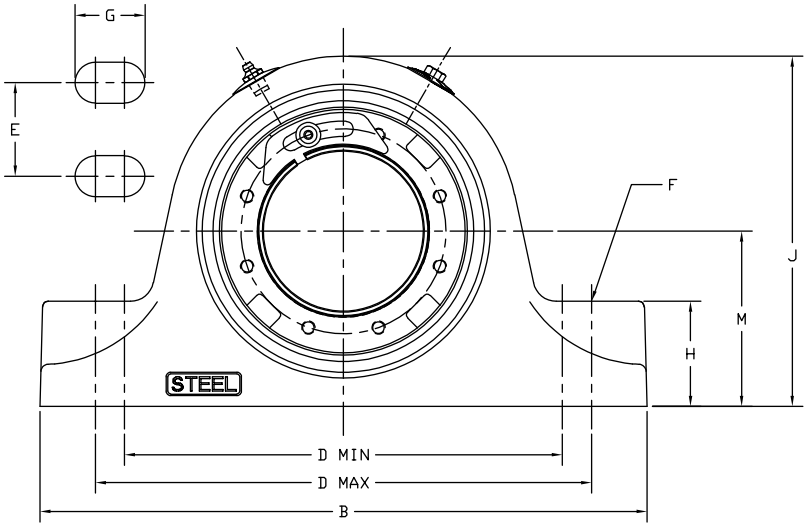

SIZES 206 THRU 308

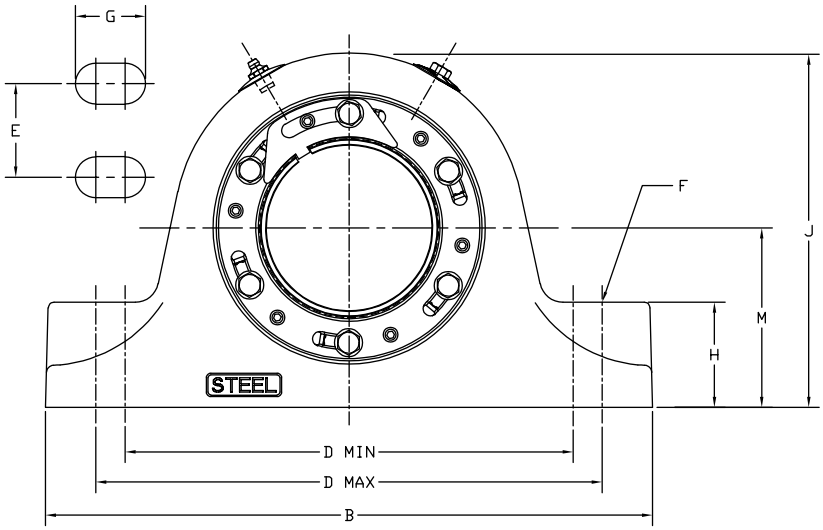

SIZES 311 THRU 500

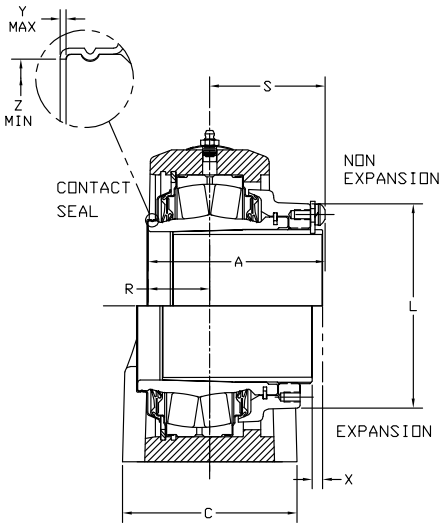

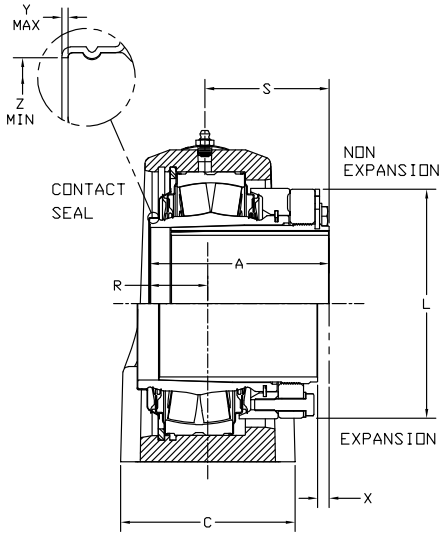

IP pillow block – inch

4-bolt, E-dimensioned steel (HD)

Non-expansion

Shaft size	Part number	Description
2-1/4	071906	SEP4B-IP-204R
2-7/16	071907	SEP4B-IP-207R
2-1/2	071908	SEP4B-IP-208R
2-11/16	071909	SEP4B-IP-211R
2-3/4	071910	SEP4B-IP-212R
2-15/16	071911	SEP4B-IP-215R
3	071912	SEP4B-IP-300R
3-3/16	071913	SEP4B-IP-303R
3-1/4	071914	SEP4B-IP-304R
3-7/16	071915	SEP4B-IP-307R
3-1/2	071916	SEP4B-IP-308R
3-15/16	071917	SEP4B-IP-315R
4	071918	SEP4B-IP-400R
4-7/16	071919	SEP4B-IP-407R
4-1/2	071920	SEP4B-IP-408R
4-15/16	071921	SEP4B-IP-415R
5	071922	SEP4B-IP-500R

Expansion

Shaft size	Part number	Description
2-1/4	071923	SEP4B-IP-204RE
2-7/16	071924	SEP4B-IP-207RE
2-1/2	071925	SEP4B-IP-208RE
2-11/16	071926	SEP4B-IP-211RE
2-3/4	071927	SEP4B-IP-212RE
2-15/16	071928	SEP4B-IP-215RE
3	071929	SEP4B-IP-300RE
3-3/16	071930	SEP4B-IP-303RE
3-1/4	071931	SEP4B-IP-304RE
3-7/16	071932	SEP4B-IP-307RE
3-1/2	071933	SEP4B-IP-308RE
3-15/16	071934	SEP4B-IP-315RE
4	071935	SEP4B-IP-400RE
4-7/16	071936	SEP4B-IP-407RE
4-1/2	071937	SEP4B-IP-408RE
4-15/16	071938	SEP4B-IP-415RE
5	071939	SEP4B-IP-500RE

*Consult Dodge for sizes not listed.

Shaft size	A	B	C	D		E	F bolt dia.	G	H	J	L	M	R	S	X total exp.	Y	Z
				Min.	Max.												
2-1/4																	
2-7/16	3.42	10.25	3.25	7.13	8.75	1.88	5/8	1.57	1.63	5.71	3.88	2.75	1.21	2.21	1/4	0.03	2.94
2-1/2																	
2-11/16																	
2-3/4	3. 50	10.83	3.38	8.00	9.60	2.12	5/8	1.56	1.88	6.32	4.28	3.13	1.35	2.15	1/4	0.03	3.47
2-15/16																	
3																	
3-3/16																	
3-1/4	4.17	13.63	3.75	9.25	11.25	2.38	3/4	1.88	2.25	7.69	5.00	3.75	1.54	2.63	1/4	0.03	4.05
3-7/16																	
3-1/2																	
3-11/16																	
3-15/16	4.70	14.88	4.31	10.88	13.38	2.25	3/4	2.13	2.44	8.70	5.56	4.25	1.70	3.00	5/16	0.03	4.50
4																	
4-7/16	5.23	16.13	4.75	11.88	14.50	2.50	3/4	2.19	2.75	9.67	6.44	4.75	1.53	3.70	3/8	0.04	5.00
4-1/2																	
4-15/16	5.98	17.50	5.04	15.13	15.88	2.88	7/8	1.38	3.00	11.16	7.63	5.50	1.93	4.05	3/8	0.04	5.84
5																	

"A" and "R" dimensions do not include "Y" dimension.

IP round flange – inch

3- and 4-bolt

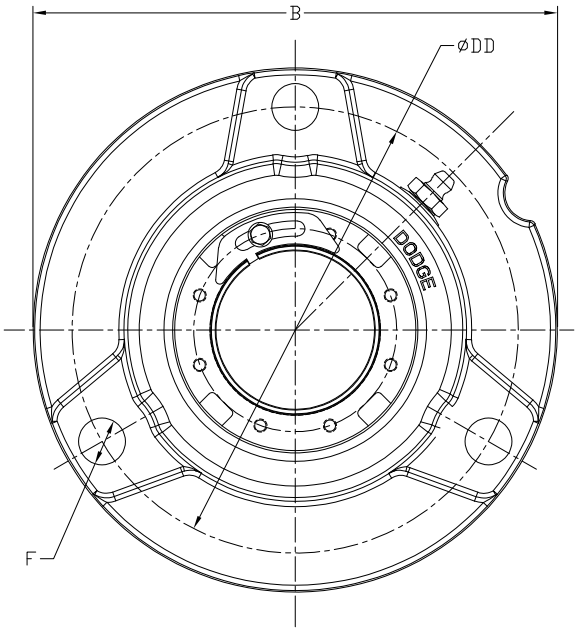

1-1/8″ THRU 1-1/2″

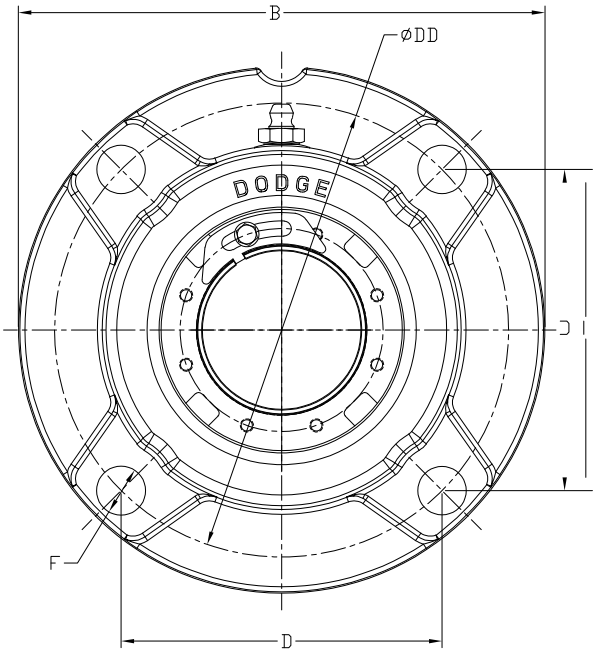

1-5/8″ THRU 3″

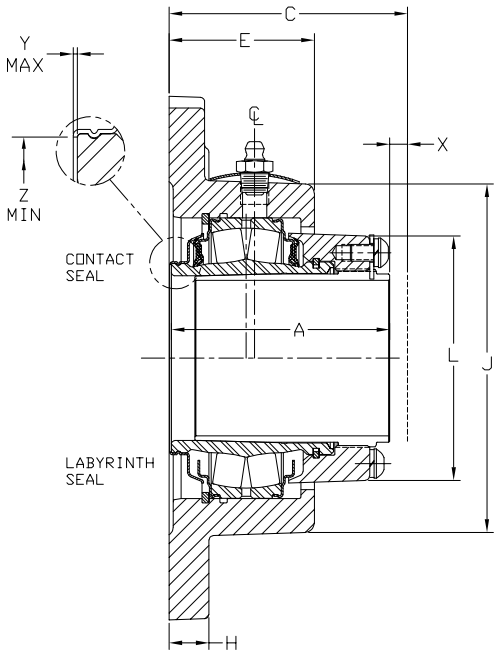

EXPANSION

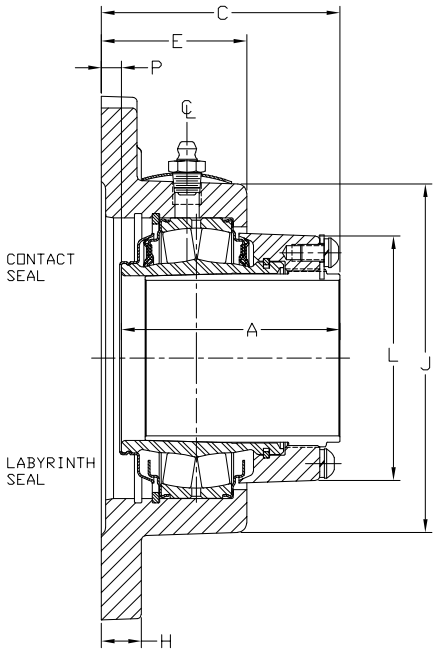

NON-EXPANSION

IP round flange – inch

3- and 4-bolt

Bearing series	Shaft size	Trident seal			
		Non-expansion		Expansion	
		Part number	Description	Part number	Description
22208	1-1/8	069592	F3R-IP-102R	069630	F3R-IP-102RE
	1-3/16	069593	F3R-IP-103R	069631	F3R-IP-103RE
	1 -1/4	069594	F3R-IP-104R	069632	F3R-IP-104RE
	1 -3/8	069595	F3R-IP-106R	069633	F3R-IP-106RE
	1 -7/16	069596	F3R-IP-107R	069634	F3R-IP-107RE
	1-1/2	069597	F3R-IP-108R	069635	F3R-IP-108RE
22209	1-5/8	069598	F4R-IP-110R	069636	F4R-IP-110RE
	1 -11/16	069599	F4R-IP-111R	069637	F4R-IP-111RE
	1-3/4	069600	F4R-IP-112R	069638	F4R-IP-112RE
22210	1 -7/8	069601	F4R-IP-114R	069639	F4R-IP-114RE
	1-15/16	069602	F4R-IP-115R	069640	F4R-IP-115RE
	2	069603	F4R-IP-200R	069641	F4R-IP-200RE
22211	2-3/16	069604	F4R-IP-203R	069642	F4R-IP-203RE
	2-1/4	069605	F4R-IP-204R	069643	F4R-IP-204RE
22213	2-3/8	069606	F4R-IP-206R	069644	F4R-IP-206RE
	2-7/16	069607	F4R-IP-207R	069645	F4R-IP-207RE
	2-1/2	069608	F4R-IP-208R	069646	F4R-IP-208RE
22215	2-11/16	069609	F4R-IP-211R	069647	F4R-IP-211RE
	2-3/4	069610	F4R-IP-212R	069648	F4R-IP-212RE
	2-15/16	069611	F4R-IP-215R	069649	F4R-IP-215RE
	3	069612	F4R-IP-300R	069650	F4R-IP-300RE

Bearing series	Shaft size	Labyrinth seal			
		Non-expansion		Expansion	
		Part number	Description	Part number	Description
22208	1-1/8	069651	F3R-IP-102L	069672	F3R-IP-102LE
	1-3/16	069652	F3R-IP-103L	069673	F3R-IP-103LE
	1 -1/4	069653	F3R-IP-104L	069674	F3R-IP-104LE
	1 -3/8	069654	F3R-IP-106L	069675	F3R-IP-106LE
	1 -7/16	069655	F3R-IP-107L	069676	F3R-IP-107LE
	1-1/2	069656	F3R-IP-108L	069677	F3R-IP-108LE
22209	1-5/8	069657	F4R-IP-110L	069678	F4R-IP-110LE
	1 -11/16	069658	F4R-IP-111L	069679	F4R-IP-111LE
	1-3/4	069659	F4R-IP-112L	069680	F4R-IP-112LE
22210	1 -7/8	069660	F4R-IP-114L	069681	F4R-IP-114LE
	1-15/16	069661	F4R-IP-115L	069682	F4R-IP-115LE
	2	069662	F4R-IP-200L	069683	F4R-IP-200LE
22211	2-3/16	069663	F4R-IP-203L	069684	F4R-IP-203LE
	2-1/4	069664	F4R-IP-204L	069685	F4R-IP-204LE
22213	2-3/8	069665	F4R-IP-206L	069686	F4R-IP-206LE
	2-7/16	069666	F4R-IP-207L	069687	F4R-IP-207LE
	2-1/2	069667	F4R-IP-208L	069688	F4R-IP-208LE
22215	2-11/16	069668	F4R-IP-211L	069689	F4R-IP-211LE
	2-3/4	069669	F4R-IP-212L	069690	F4R-IP-212LE
	2-15/16	069670	F4R-IP-215L	069691	F4R-IP-215LE
	3	069671	F4R-IP-300L	069692	F4R-IP-300LE

*Consult Dodge for sizes not listed.

Shaft size	A	B	C	D	DD	E	F 3-bolt dia.	F 4-bolt dia.	H	J	L	P	X total exp.	Y	Z
1-1/8	2.63	5.88	2.86	3.53	5.00	1.80	1/2	—	0.50	3.75	2.72	0.23	3/16	0.02	1.80
1-3/16															
1 -1/4															
1 -3/8															
1 -7/16															
1-1/2															
1-5/8	2.81	6.38	3.11	3.89	5.50	1.89	—	1/2	0.50	4.25	3.00	0.27	1/4	0.02	2.08
1 -11/16															
1-3/4															
1 -7/8	2.86	6.69	3.16	4.06	5.75	1.92	—	1/2	0.56	4.50	3.28	0.27	1/4	0.02	2.30
1-15/16															
2															
2-3/16	3.03	7.38	3.34	4.50	6.38	2.05	—	5/8	0.56	4.80	3.50	0.31	1/4	0.03	2.60
2-1/4															
2-3/8	3.42	7.75	3.73	4.77	6.75	2.38	—	5/8	0.64	5.38	3.88	0.31	1/4	0.03	2.95
2-7/16															
2-1/2															
2-11/16	3.50	9.25	3.81	5.56	7.88	2.39	—	3/4	0.75	6.25	4.28	0.31	1/4	0.03	3.47
2-3/4															
2-15/16															
3															

Notes: "P" dimension is for non-expansion only.

"A" and "P" dimensions do not include "Y" dimension.

IP square flange – inch

4-bolt

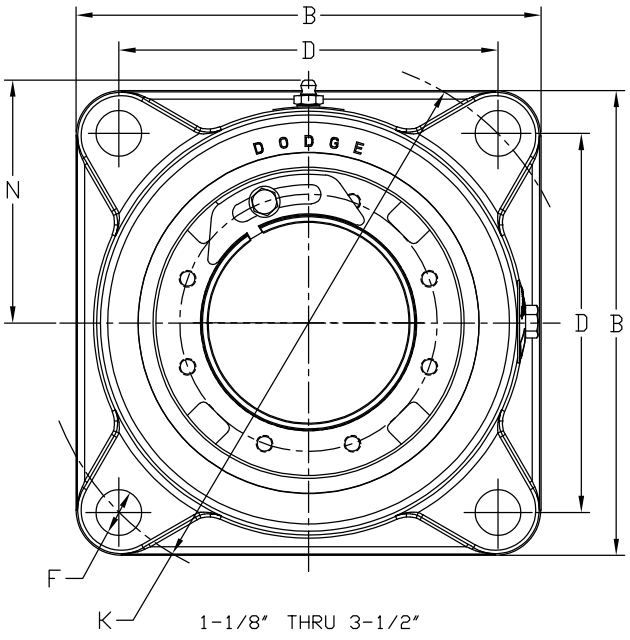

1-1/8″ THRU 3-1/2″

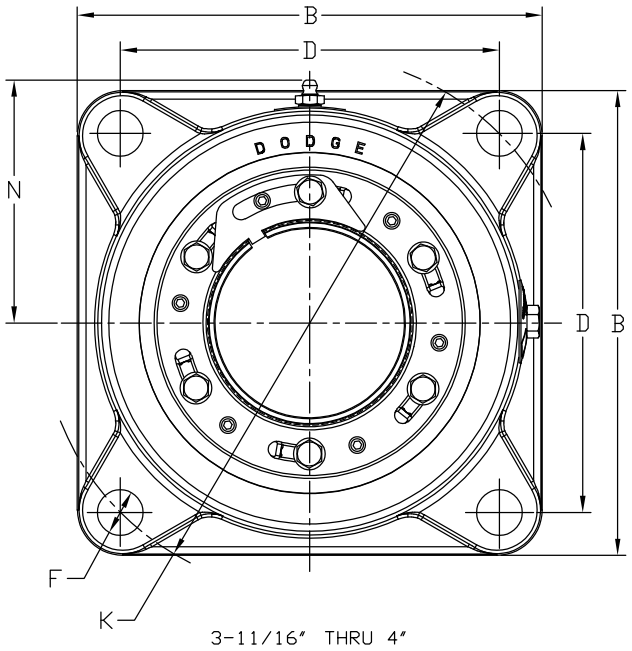

3-11/16″ THRU 4″

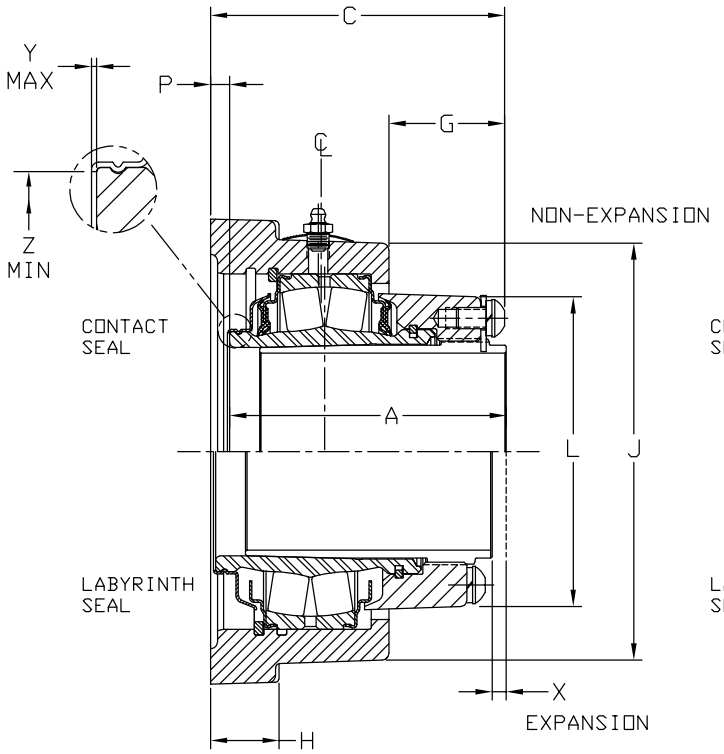

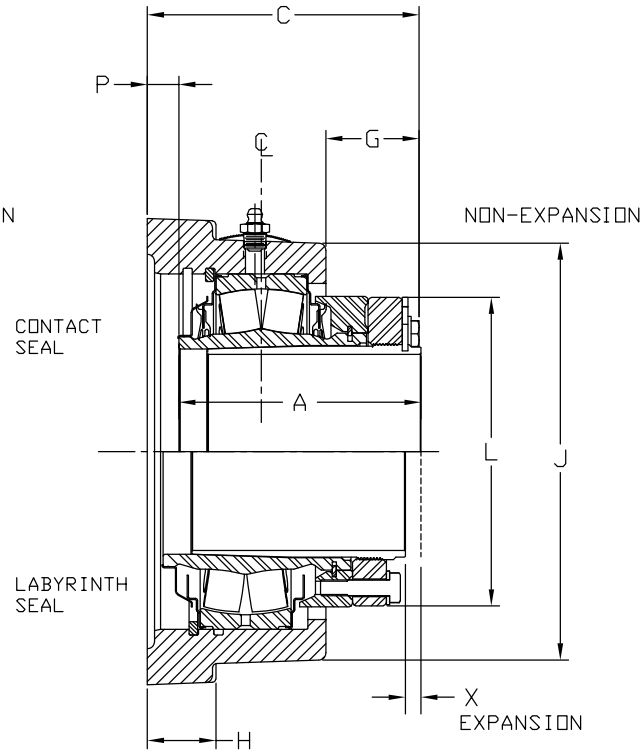

IP square flange – inch

4-bolt

Bearing series	Shaft size	Trident seal			
		Non-expansion		Expansion	
		Part number	Description	Part number	Description
22208	1-1/8	069693	F4S-IP-102R	069721	F4S-IP-102RE
	1-3/16	069694	F4S-IP-103R	069722	F4S-IP-103RE
	1-1/4	069695	F4S-IP-104R	069723	F4S-IP-104RE
	1-3/8	069696	F4S-IP-106R	069724	F4S-IP-106RE
	1-7/16	069697	F4S-IP-107R	069725	F4S-IP-107RE
	1-1/2	069698	F4S-IP-108R	069726	F4S-IP-108RE
22209	1-5/8	069699	F4S-IP-110R	069727	F4S-IP-110RE
	1-11/16	069700	F4S-IP-111R	069728	F4S-IP-111RE
	1-3/4	069701	F4S-IP-112R	069729	F4S-IP-112RE
22210	1-7/8	069702	F4S-IP-114R	069730	F4S-IP-114RE
	1-15/16	069703	F4S-IP-115R	069731	F4S-IP-115RE
	2	069704	F4S-IP-200R	069732	F4S-IP-200RE
22211	2-3/16	069705	F4S-IP-203R	069733	F4S-IP-203RE
	2-1/4	069706	F4S-IP-204R	069734	F4S-IP-204RE
22213	2-3/8	069707	F4S-IP-206R	069735	F4S-IP-206RE
	2-7/16	069708	F4S-IP-207R	069736	F4S-IP-207RE
	2-1/2	069709	F4S-IP-208R	069737	F4S-IP-208RE
22215	2-11/16	069710	F4S-IP-211R	069738	F4S-IP-211RE
	2-3/4	069711	F4S-IP-212R	069739	F4S-IP-212RE
	2-15/16	069712	F4S-IP-215R	069740	F4S-IP-215RE
	3	069713	F4S-IP-300R	069741	F4S-IP-300RE
22218	3-3/16	069714	F4S-IP-303R	069742	F4S-IP-303RE
	3-1/4	069715	F4S-IP-304R	069743	F4S-IP-304RE
	3-7/16	069716	F4S-IP-307R	069744	F4S-IP-307RE
	3-1/2	069717	F4S-IP-308R	069745	F4S-IP-308RE
22220	3-11/16	069718	F4S-IP-311R	069746	F4S-IP-311RE
	3-15/16	069719	F4S-IP-315R	069747	F4S-IP-315RE
	4	069720	F4S-IP-400R	069748	F4S-IP-400RE

Bearing series	Shaft size	Labyrinth seal			
		Non-expansion		Expansion	
		Part number	Description	Part number	Description
22208	1-1/8	069749	F4S-IP-102L	069777	F4S-IP-102LE
	1-3/16	069750	F4S-IP-103L	069778	F4S-IP-103LE
	1-1/4	069751	F4S-IP-104L	069779	F4S-IP-104LE
	1-3/8	069752	F4S-IP-106L	069780	F4S-IP-106LE
	1-7/16	069753	F4S-IP-107L	069781	F4S-IP-107LE
	1-1/2	069754	F4S-IP-108L	069782	F4S-IP-108LE
22209	1-5/8	069755	F4S-IP-110L	069783	F4S-IP-110LE
	1-11/16	069756	F4S-IP-111L	069784	F4S-IP-111LE
	1-3/4	069757	F4S-IP-112L	069785	F4S-IP-112LE
22210	1-7/8	069758	F4S-IP-114L	069786	F4S-IP-114LE
	1-15/16	069759	F4S-IP-115L	069787	F4S-IP-115LE
	2	069760	F4S-IP-200L	069788	F4S-IP-200LE
22211	2-3/16	069761	F4S-IP-203L	069789	F4S-IP-203LE
	2-1/4	069762	F4S-IP-204L	069790	F4S-IP-204LE
22213	2-3/8	069763	F4S-IP-206L	069791	F4S-IP-206LE
	2-7/16	069764	F4S-IP-207L	069792	F4S-IP-207LE
	2-1/2	069765	F4S-IP-208L	069793	F4S-IP-208LE
22215	2-11/16	069766	F4S-IP-211L	069794	F4S-IP-211LE
	2-3/4	069767	F4S-IP-212L	069795	F4S-IP-212LE
	2-15/16	069768	F4S-IP-215L	069796	F4S-IP-215LE
	3	069769	F4S-IP-300L	069797	F4S-IP-300LE
22218	3-3/16	069770	F4S-IP-303L	069798	F4S-IP-303LE
	3-1/4	069771	F4S-IP-304L	069799	F4S-IP-304LE
	3-7/16	069772	F4S-IP-307L	069800	F4S-IP-307LE
	3-1/2	069773	F4S-IP-308L	069801	F4S-IP-308LE
22220	3-11/16	069774	F4S-IP-311L	069802	F4S-IP-311LE
	3-15/16	069775	F4S-IP-315L	069803	F4S-IP-315LE
	4	069776	F4S-IP-400L	069804	F4S-IP-400LE

*Consult Dodge for sizes not listed.

Shaft size	A	B	C	D	F bolt dia.	G	H	J	K	L	N	P	X total exp.	Y	Z
1-1/8 1-3/16 1-1/4 1-3/8 1-7/16 1-1/2	2.63	4.75	2.86	3.53	1/2	1.08	0.50	3.81	5.00	2.72	2.48	0.23	3/16	0.02	1.79
1-5/8 1-11/16 1-3/4	2.81	5.13	3.11	3.89	1/2	1.20	0.50	4.41	5.50	3.00	2.78	0.30	1/4	0.02	2.08
1-7/8 1-15/16 2	2.86	5.29	3.15	4.06	1/2	1.23	0.56	4.97	5.75	3.28	2.91	0.30	1/4	0.02	2.29
2-3/16 2-1/4	3.03	5.88	3.34	4.51	5/8	1.31	0.56	5.16	6.38	3.80	3.09	0.31	1/4	0.02	2.59
2-3/8 2-7/16 2-1/2	3.42	6.13	3.73	4.78	5/8	1.36	0.64	5.63	6.75	3.88	3.41	0.31	1/4	0.025	2.94
2-11/16 2-3/4 2-15/16 3	3.50	7.18	3.81	5.56	3/4	1.42	0.75	6.50	7.88	4.28	3.84	0.31	1/4	0.025	3.47
3-3/16 3-1/4 3-7/16 3-1/2	4.17	8.25	4.48	6.72	3/4	1.59	0.94	7.48	9.50	5.00	4.33	0.31	1/4	0.025	4.05
3-11/16 3-15/16 4	4.82	9.25	5.08	7.61	7/8	1.90	1.06	8.22	10.75	5.56	4.70	0.38	5/16	0.025	4.50

Notes: "P" dimension is for non-expansion only.
"A" and "P" dimensions do not include "Y" dimension.

IP square flange – inch

4-bolt, E-dimensioned

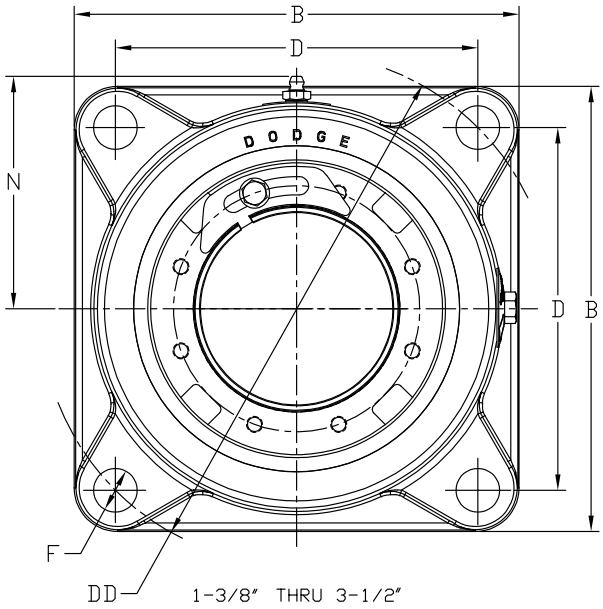

1-3/8″ THRU 3-1/2″

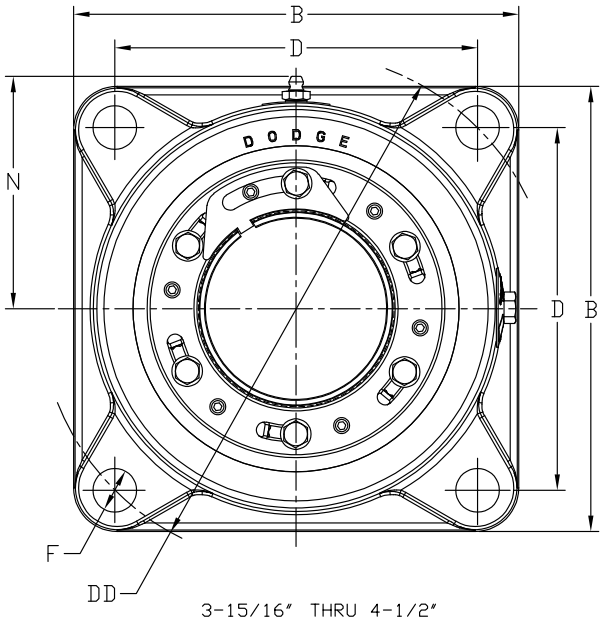

3-15/16″ THRU 4-1/2″

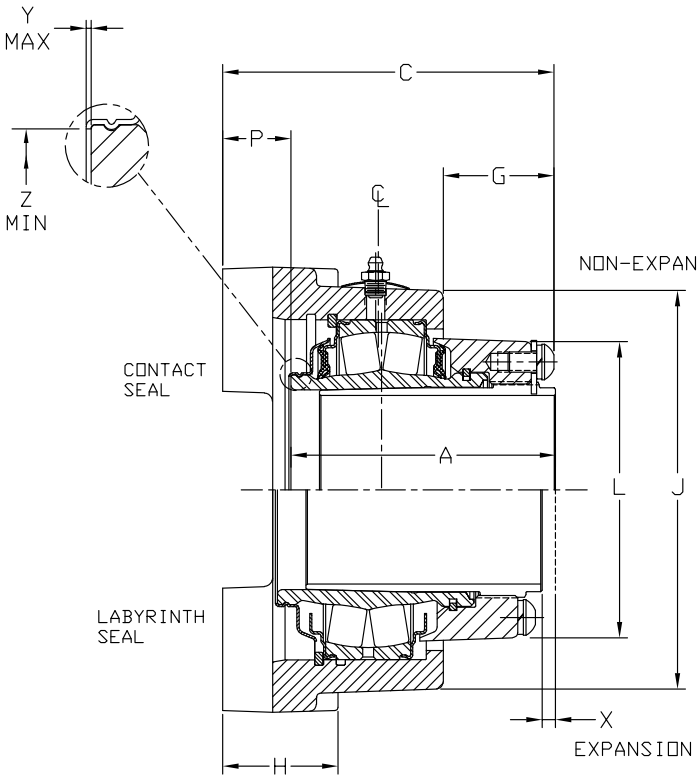

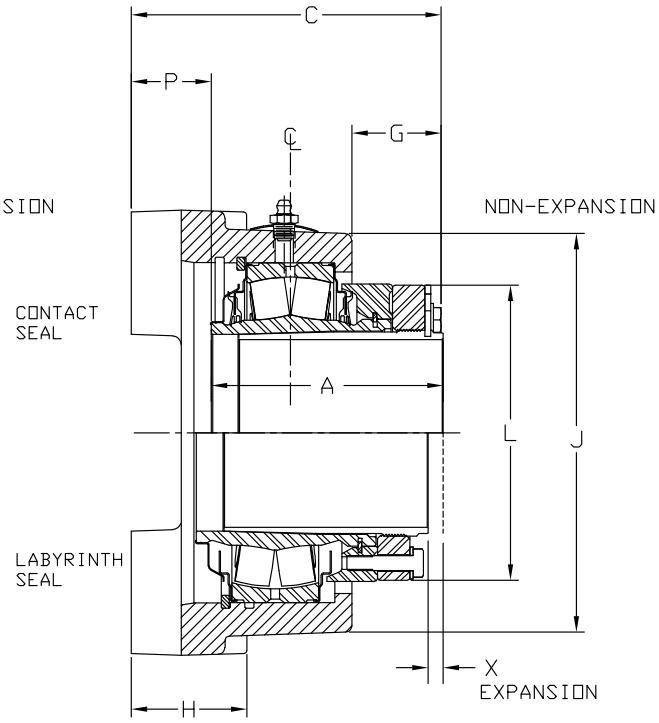

IP square flange – inch

4-bolt, E-dimensioned

Bearing series	Shaft size	Trident seal			
		Non-expansion		Expansion	
		Part number	Description	Part number	Description
22208	1-3/8	071288	EF4B-IP-106R	071313	EF4B-IP-106RE
	1-7/16	071289	EF4B-IP-107R	071314	EF4B-IP-107RE
22209	1-1/2	071290	EF4B-IP-108R	071315	EF4B-IP-108RE
	1-5/8	071291	EF4B-IP-110R	071316	EF4B-IP-110RE
	1-11/16	071292	EF4B-IP-111R	071317	EF4B-IP-111RE
22210	1-3/4	071293	EF4B-IP-112R	071318	EF4B-IP-112RE
	1-7/8	071294	EF4B-IP-114R	071319	EF4B-IP-114RE
	1-15/16	071295	EF4B-IP-115R	071320	EF4B-IP-115RE
	2	071296	EF4B-IP-200R	071321	EF4B-IP-200RE
22211	2-3/16	071297	EF4B-IP-203R	071322	EF4B-IP-203RE
22213	2-1/4	071298	EF4B-IP-204R	071323	EF4B-IP-204RE
	2-7/16	071299	EF4B-IP-207R	071324	EF4B-IP-207RE
	2-1/2	071300	EF4B-IP-208R	071325	EF4B-IP-208RE
22215	2-11/16	071301	EF4B-IP-211R	071326	EF4B-IP-211RE
	2-3/4	071302	EF4B-IP-212R	071327	EF4B-IP-212RE
	2-15/16	071303	EF4B-IP-215R	071328	EF4B-IP-215RE
	3	071304	EF4B-IP-300R	071329	EF4B-IP-300RE
22218	3-3/16	071305	EF4B-IP-303R	071330	EF4B-IP-303RE
	3-1/4	071306	EF4B-IP-304R	071331	EF4B-IP-304RE
	3-7/16	071307	EF4B-IP-307R	071332	EF4B-IP-307RE
	3-1/2	071308	EF4B-IP-308R	071333	EF4B-IP-308RE
22220	3-15/16	071309	EF4B-IP-315R	071334	EF4B-IP-315RE
	4	071310	EF4B-IP-400R	071335	EF4B-IP-400RE
22222	4-7/16	071311	EF4B-IP-407R	071336	EF4B-IP-407RE
	4-1/2	071312	EF4B-IP-408R	071337	EF4B-IP-408RE

Bearing series	Shaft size	Labyrinth seal			
		Non-expansion		Expansion	
		Part number	Description	Part number	Description
22208	1-3/8	071338	EF4B-IP-106L	071364	EF4B-IP-106LE
	1-7/16	071339	EF4B-IP-107L	071365	EF4B-IP-107LE
22209	1-1/2	071340	EF4B-IP-108L	071366	EF4B-IP-108LE
	1-5/8	071341	EF4B-IP-110L	071367	EF4B-IP-110LE
	1-11/16	071342	EF4B-IP-111L	071368	EF4B-IP-111LE
22210	1-3/4	071343	EF4B-IP-112L	071369	EF4B-IP-112LE
	1-7/8	071344	EF4B-IP-114L	071370	EF4B-IP-114LE
	1-15/16	071345	EF4B-IP-115L	071371	EF4B-IP-115LE
	2	071346	EF4B-IP-200L	071372	EF4B-IP-200LE
22211	2-3/16	071347	EF4B-IP-203L	071373	EF4B-IP-203LE
22213	2-1/4	071348	EF4B-IP-204L	071374	EF4B-IP-204LE
	2-7/16	071349	EF4B-IP-207L	071375	EF4B-IP-207LE
	2-1/2	071350	EF4B-IP-208L	071376	EF4B-IP-208LE
22215	2-11/16	071351	EF4B-IP-211L	071377	EF4B-IP-211LE
	2-3/4	071352	EF4B-IP-212L	071378	EF4B-IP-212LE
	2-15/16	071353	EF4B-IP-215L	071379	EF4B-IP-215LE
	3	071354	EF4B-IP-300L	071380	EF4B-IP-300LE
22218	3-3/16	071355	EF4B-IP-303L	071381	EF4B-IP-303LE
	3-1/4	071356	EF4B-IP-304L	071382	EF4B-IP-304LE
	3-7/16	071357	EF4B-IP-307L	071383	EF4B-IP-307LE
	3-1/2	071358	EF4B-IP-308L	071384	EF4B-IP-308LE
22220	3-15/16	071359	EF4B-IP-315L	071385	EF4B-IP-315LE
	4	071360	EF4B-IP-400L	071386	EF4B-IP-400LE
22222	4-7/16	071361	EF4B-IP-407L	071387	EF4B-IP-407LE
	4-1/2	071362	EF4B-IP-408L	071388	EF4B-IP-408LE

*Consult Dodge for sizes not listed.

Shaft size	A	B	C	D	DD	F bolt dia.	G	H	J	L	N	P	X total exp.	Y	Z
1-3/8 1-7/16	2.62	4.62	3.15	3.50	4.95	1/2	0.66	1.06	3.88	2.72	2.34	0.53	5/32	0.02	1.80
1-1/2 1-5/8 1-11/16	2.81	5.3	3.64	4.13	5.83	1/2	0.67	1.19	4.18	3.00	2.50	0.83	3/16	0.02	2.08
1-3/4 1-7/8 1-15/16 2	2.86	5.62	3.64	4.38	6.19	1/2	0.65	1.18	4.36	3.28	2.60	0.79	7/32	0.02	2.30
2-3/16	3.03	6.25	3.96	4.88	6.89	5/8	0.68	1.38	4.88	3.50	2.88	0.94	1/4	0.02	2.60
2-1/4 2-7/16 2-1/2	3.42	6.88	4.41	5.37	7.60	5/8	1.04	1.50	5.81	3.88	3.32	0.99	1/4	0.025	2.95
2-11/16 2-3/4 2-15/16 3	3.50	7.76	4.59	6.00	8.49	3/4	0.79	1.61	6.30	4.28	3.58	1.1	1/4	0.025	3.47
3-3/16 3-1/4 3-7/16 3-1/2	4.21	9.25	5.4	7.00	9.90	3/4	1.12	1.88	7.44	5	4.15	1.24	1/4	0.025	4.05
3-15/16 4	4.82	10.25	6.73	7.75	10.96	7/8	1.22	2.12	8.27	5.56	4.58	2.02	5/16	0.025	4.50
4-7/16 4-1/2	5.48	10.88	7.12	8.75	12.37	7/8	1.42	2.43	9.13	6.44	5.01	1.89	3/8	0.036	5.00

Notes: "P" dimension is for non-expansion only.

"A" and "P" dimensions do not include "Y" dimension.

IP square flange – inch

4-bolt, steel (HD)

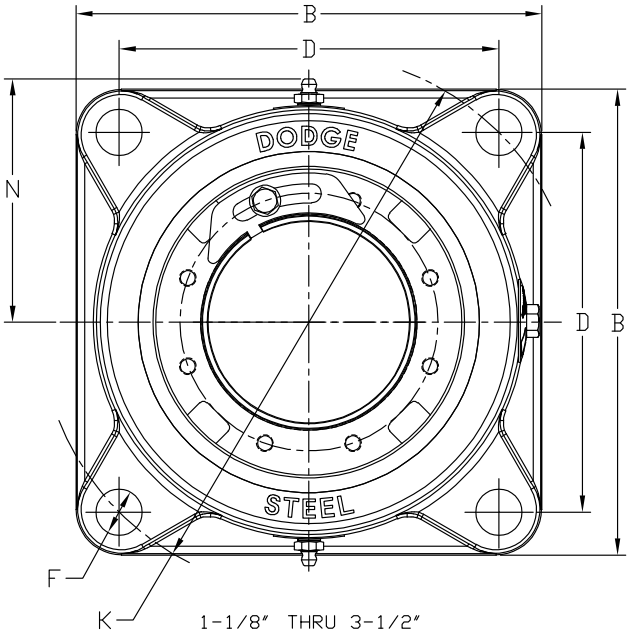

1-1/8″ THRU 3-1/2″

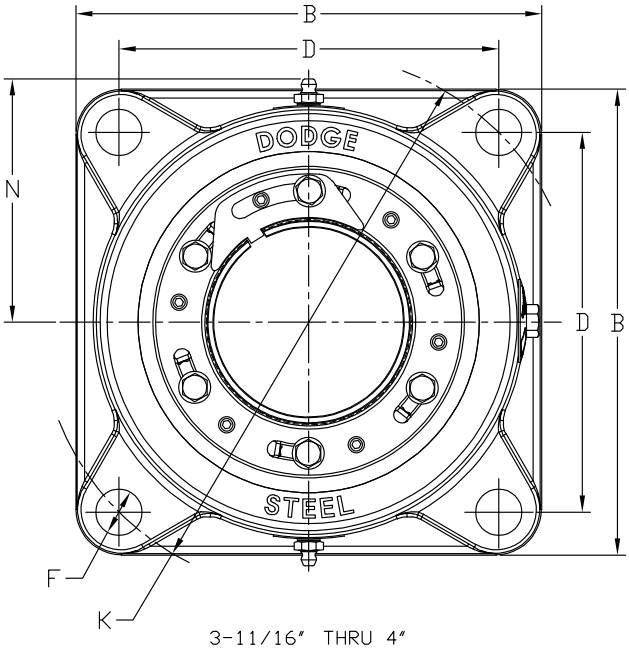

3-11/16″ THRU 4″

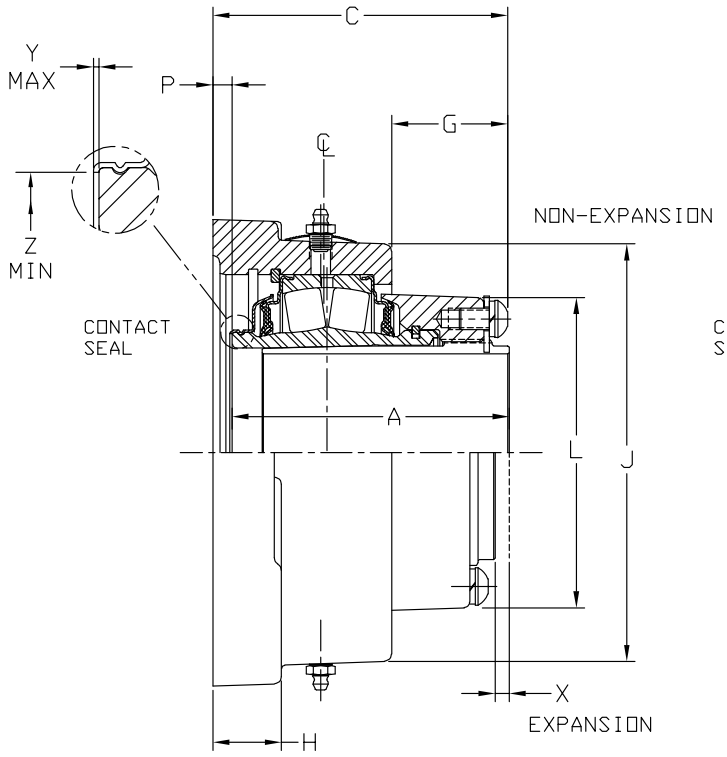

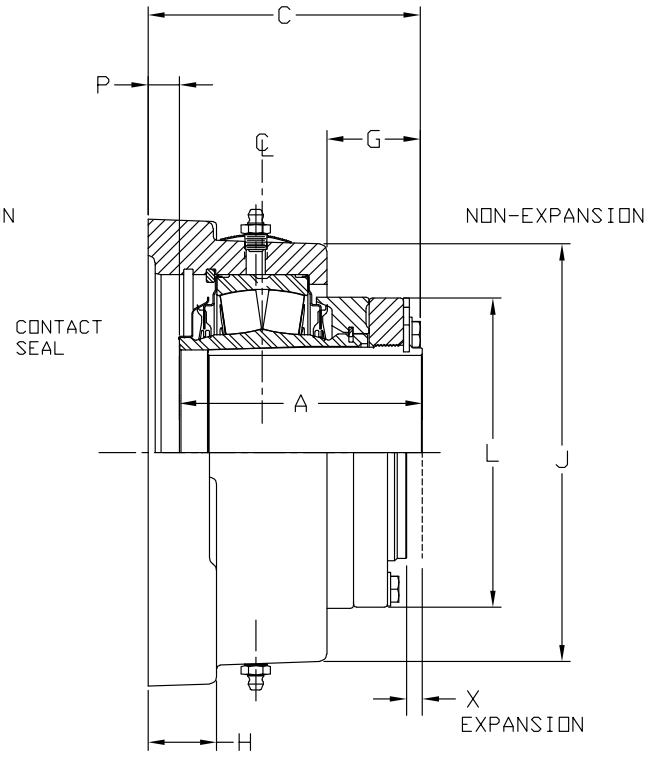

IP square flange – inch

4-bolt, steel (HD)

Shaft size	Non-expansion		Expansion	
	Part number	Description	Part number	Description
1-1/8	072170	SF4S-IP-102R	072198	SF4S-IP-102RE
1-3/16	072171	SF4S-IP-103R	072199	SF4S-IP-103RE
1-1/4	072172	SF4S-IP-104R	072200	SF4S-IP-104RE
1-3/8	072173	SF4S-IP-106R	072201	SF4S-IP-106RE
1-7/16	072174	SF4S-IP-107R	072202	SF4S-IP-107RE
1-1/2	072175	SF4S-IP-108R	072203	SF4S-IP-108RE
1-5/8	072176	SF4S-IP-110R	072204	SF4S-IP-110RE
1-11/16	072177	SF4S-IP-111R	072205	SF4S-IP-111RE
1-3/4	072178	SF4S-IP-112R	072206	SF4S-IP-112RE
1-7/8	072179	SF4S-IP-114R	072207	SF4S-IP-114RE
1-15/16	072180	SF4S-IP-115R	072208	SF4S-IP-115RE
2	072181	SF4S-IP-200R	072209	SF4S-IP-200RE
2-3/16	072182	SF4S-IP-203R	072210	SF4S-IP-203RE
2-1/4	072183	SF4S-IP-204R	072211	SF4S-IP-204RE
2-3/8	072184	SF4S-IP-206R	072212	SF4S-IP-206RE

Shaft size	Non-expansion		Expansion	
	Part number	Description	Part number	Description
2-7/16	072185	SF4S-IP-207R	072213	SF4S-IP-207RE
2-1/2	072186	SF4S-IP-208R	072214	SF4S-IP-208RE
2-11/16	072187	SF4S-IP-211R	072215	SF4S-IP-211RE
2-3/4	072188	SF4S-IP-212R	072216	SF4S-IP-212RE
2-15/16	072189	SF4S-IP-215R	072217	SF4S-IP-215RE
3	072190	SF4S-IP-300R	072218	SF4S-IP-300RE
3-3/16	072191	SF4S-IP-303R	072219	SF4S-IP-303RE
3-1/4	072192	SF4S-IP-304R	072220	SF4S-IP-304RE
3-7/16	072193	SF4S-IP-307R	072221	SF4S-IP-307RE
3-1/2	072194	SF4S-IP-308R	072222	SF4S-IP-308RE
3-11/16	072195	SF4S-IP-311R	072223	SF4S-IP-311RE
3-15/16	072196	SF4S-IP-315R	072224	SF4S-IP-315RE
4	072197	SF4S-IP-400R	072225	SF4S-IP-400RE

*Consult Dodge for sizes not listed.

Shaft size	A	B	C	D	F bolt dia.	G	H	J	K	L	N	P	X total exp.	Y	Z
1-1/8															
1-3/16															
1-1/4	2.63	4.62	2.86	3.53	1/2	1.08	0.50	3.81	5.00	2.72	2.28	0.23	3/16	0.02	1.79
1-3/8															
1-7/16															
1-1/2															
1-5/8															
1-11/16	2.81	5.13	3.11	3.89	1/2	0.91	0.88	4.41	5.50	3.00	2.62	0.20	7/32	0.02	2.08
1-3/4															
1-7/8															
1-15/16	2.86	5.29	3.15	4.06	1/2	0.91	0.91	4.66	5.75	3.28	2.75	0.29	7/32	0.02	2.30
2															
2-3/16	3.03	5.88	3.44	4.51	5/8	1.31	0.56	5.16	6.38	3.50	3.09	0.31	1/4	0.025	2.59
2-1/4															
2-3/8															
2-7/16	3.42	6.13	3.73	4.78	5/8	0.95	1.00	5.63	6.75	3.80	3.24	0.15	1/4	0.025	2.94
2-1/2															
2-11/16															
2-3/4	3.50	7.18	3.81	5.56	3/4	0.94	1.06	6.51	7.88	4.20	3.67	0.27	1/4	0.025	3.47
2-15/16															
3															
3-3/16															
3-1/4	4.17	8.25	4.28	6.72	3/4	0.94	1.28	7.49	9.50	5.00	4.16	0.10	1/4	0.025	4.50
3-7/16															
3-1/2															
3-11/16															
3-15/16	4.82	9.49	5.08	7.61	0.88	1.90	1.06	8.22	10.75	5.56	4.70	0.38	5/16	0.025	4.50
4															

"P" dimension Is for non-expansion only.

"A" and "R" dimensions do not include "Y" dimension.

IP square flange – inch

4-bolt, E-dimensioned steel (HD)

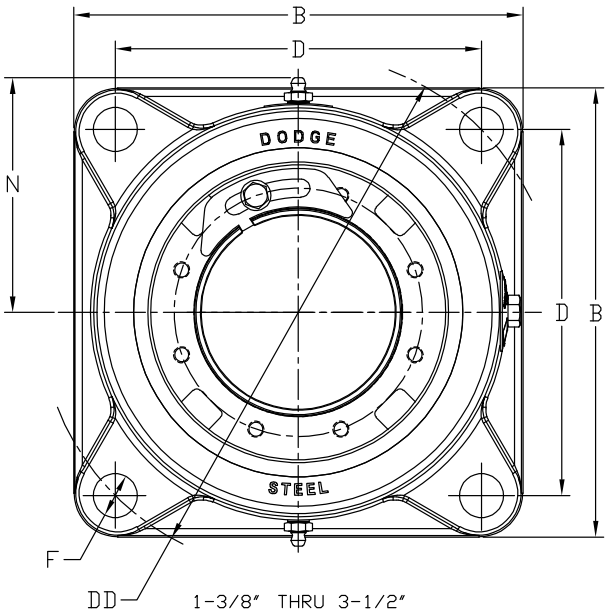

1-3/8″ THRU 3-1/2″

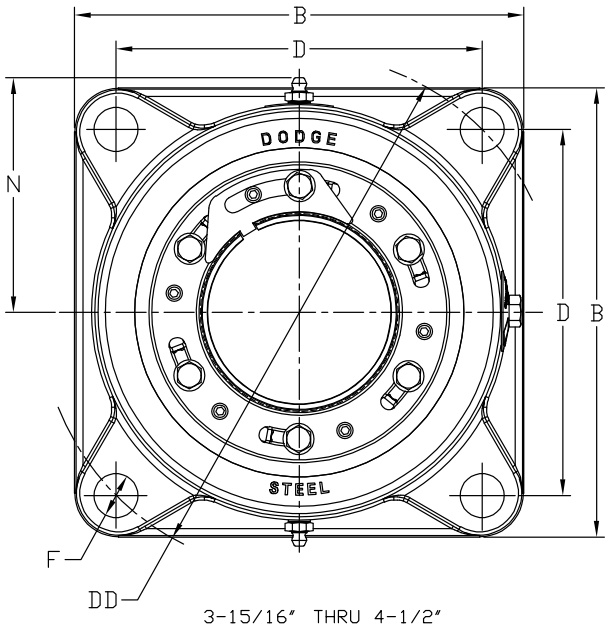

3-15/16″ THRU 4-1/2″

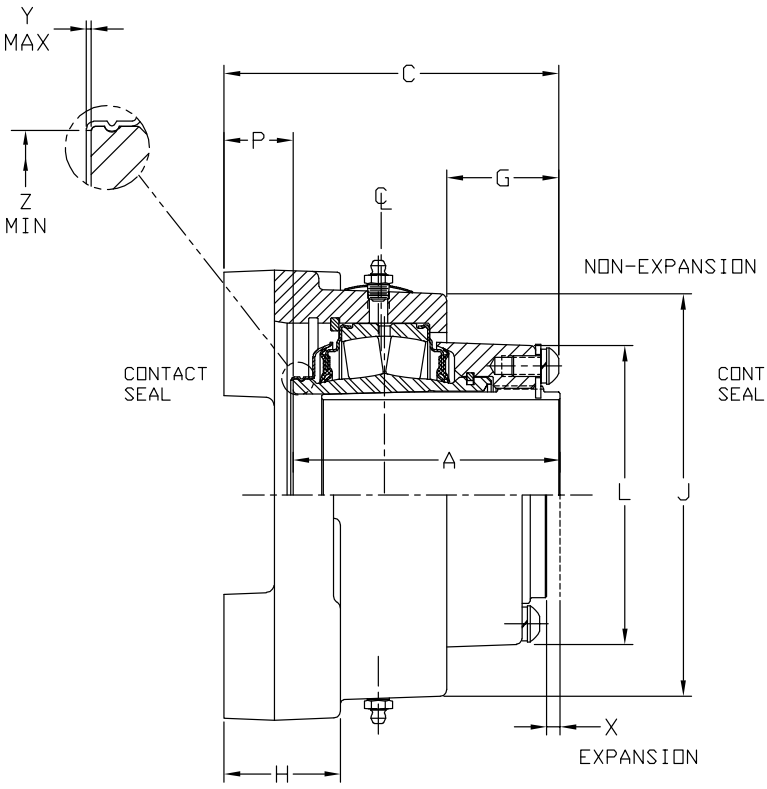

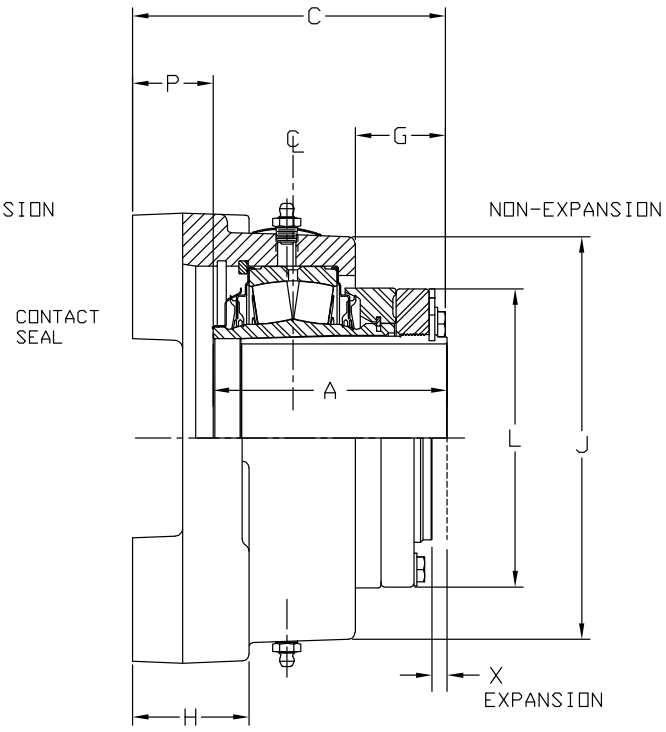

IP square flange – inch

4-bolt, E-dimensioned steel (HD)

Shaft size	Non-expansion		Expansion	
	Part number	Description	Part number	Description
1-3/8	072226	SEF4B-IP-106R	072251	SEF4B-IP-106RE
1-716	072227	SEF4B-IP-107R	072252	SEF4B-IP-107RE
1-1/2	072228	SEF4B-IP-108R	072253	SEF4B-IP-108RE
1-5/8	072229	SEF4B-IP-110R	072254	SEF4B-IP-110RE
1-11/16	072230	SEF4B-IP-111R	072255	SEF4B-IP-111RE
1-3/4	072231	SEF4B-IP-112R	072256	SEF4B-IP-112RE
1-7/8	072232	SEF4B-IP-114R	072257	SEF4B-IP-114RE
1-15/16	072233	SEF4B-IP-115R	072258	SEF4B-IP-115RE
2	072234	SEF4B-IP-200R	072259	SEF4B-IP-200RE
2-3/16	072235	SEF4B-IP-203R	072260	SEF4B-IP-203RE
2-7/16	072237	SEF4B-IP-207R	072262	SEF4B-IP-207RE
2-1/2	072238	SEF4B-IP-208R	072263	SEF4B-IP-208RE
2-11/16	072239	SEF4B-IP-211R	072264	SEF4B-IP-211RE

Shaft size	Non-expansion		Expansion	
	Part number	Description	Part number	Description
2-3/4	072240	SEF4B-IP-212R	072265	SEF4B-IP-212RE
2-15/16	072241	SEF4B-IP-215R	072266	SEF4B-IP-215RE
3	072242	SEF4B-IP-300R	072267	SEF4B-IP-300RE
3-3/16	072243	SEF4B-IP-303R	072268	SEF4B-IP-303RE
3-1/4	072244	SEF4B-IP-304R	072269	SEF4B-IP-304RE
3-7/16	072245	SEF4B-IP-307R	072270	SEF4B-IP-307RE
3-1/2	072246	SEF4B-IP-308R	072271	SEF4B-IP-308RE
3-15/16	072247	SEF4B-IP-315R	072272	SEF4B-IP-315RE
4	072248	SEF4B-IP-400R	072273	SEF4B-IP-400RE
4-7/16	072249	SEF4B-IP-407R	072274	SEF4B-IP-407RE
4-1/2	072250	SEF4B-IP-408R	072275	SEF4B-IP-408RE

*Consult Dodge for sizes not listed

Shaft size	A	B	C	D	DD	F bolt dia.	G	H	J	L	N	P	X total exp.	Y	Z
1-3/8 1-716	2.63	4.62	2.87	3.50	4.95	1/2	0.84	0.88	3.70	2.72	2.25	0.24	3/16	0.02	1.80
1-1/2 1-5/8 1-11/16	2.81	5.37	3.01	4.125	5.84	1/2	0.91	0.88	4.41	3.00	2.62	0.20	7/32	0.02	2.08
1-3/4 1-7/8 1-15/16 2	2.86	5.49	3.15	4.38	6.188	1/2	0.91	0.88	4.75	3.28	2.75	0.29	7/32	0.02	2.30
2-3/16	3.03	6.18	3.26	4.87	6.89	5/8	0.93	1.00	5.03	3.50	2.93	0.23	1/4	0.02	2.60
2-7/16 2-1/2	3.42	6.62	3.57	5.37	7.60	5/8	0.95	1.00	5.63	3.80	3.23	0.15	1/4	0.025	2.95
2-11/16 2-3/4 2-15/16 3	3.50	7.43	3.77	6.00	8.49	3/4	0.94	1.06	6.66	4.20	3.75	0.27	1/4	0.025	3.47
3-3/16 3-1/4 3-7/16 3-1/2	4.17	8.62	4.27	7.01	9.91	3/4	0.96	1.31	7.49	5.00	4.17	0.10	1/4	0.025	4.05
3-15/16 4	4.82	9.96	5.04	7.75	10.96	7/8	1.18	1.50	8.22	5.44	4.68	0.34	5/16	0.025	4.50
4-7/16 4-1/2	5.48	10.87	5.59	8.75	12.38	7/8	1.63	1.50	8.76	6.35	4.80	0.36	3/8	0.036	5.00

"P" dimension Is for non-expansion only.

"A" and "R" dimensions do not include "Y" dimension.

IP piloted flange – inch

4-bolt

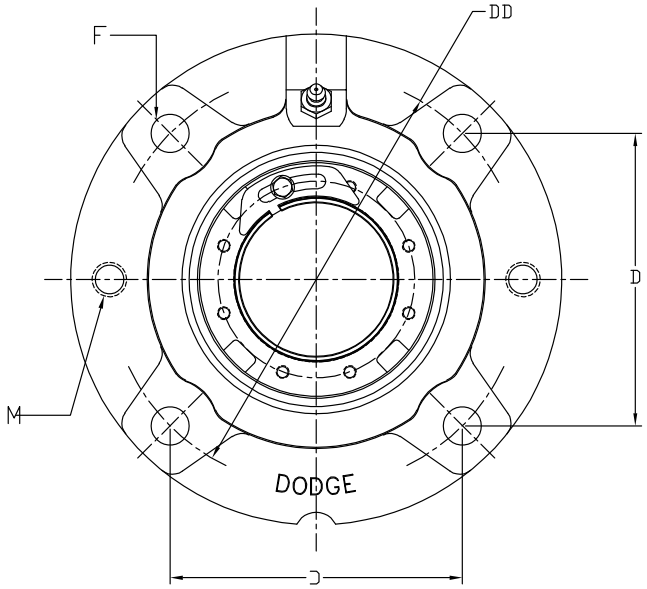

SIZES 102 - 308

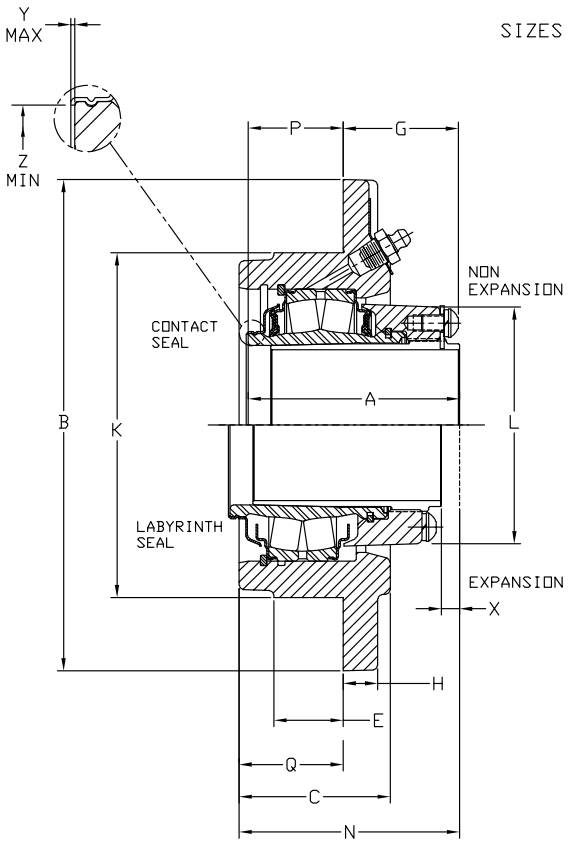

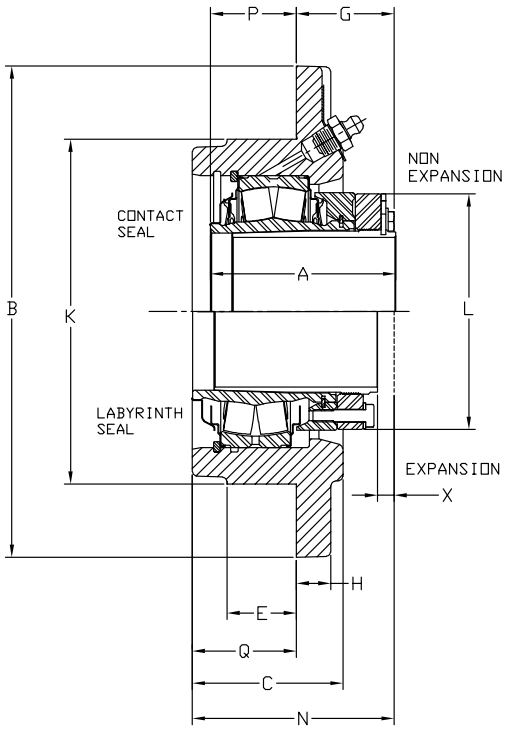

IP piloted flange – inch

4-bolt

Bearing series	Shaft size	Trident seal			
		Non-expansion		Expansion	
		Part number	Description	Part number	Description
22208	1-1/8	069805	FC-IP-102R	069837	FC-IP-102RE
	1-3/16	069806	FC-IP-103R	069838	FC-IP-103RE
	1-1/4	069807	FC-IP-104R	069839	FC-IP-104RE
	1-3/8	069808	FC-IP-106R	069840	FC-IP-106RE
	1-7/16	069809	FC-IP-107R	069841	FC-IP-107RE
	1-1/2	069810	FC-IP-108R	069842	FC-IP-108RE
22209	1-5/8	069811	FC-IP-110R	069843	FC-IP-110RE
	1-11/16	069812	FC-IP-111R	069844	FC-IP-111RE
	1-3/4	069813	FC-IP-112R	069845	FC-IP-112RE
22210	1-7/8	069814	FC-IP-114R	069846	FC-IP-114RE
	1-15/16	069815	FC-IP-115R	069847	FC-IP-115RE
	2	069816	FC-IP-200R	069848	FC-IP-200RE
22211	2-3/16	069817	FC-IP-203R	069849	FC-IP-203RE
	2-1/4	069818	FC-IP-204R	069850	FC-IP-204RE
22213	2-3/8	069819	FC-IP-206R	069851	FC-IP-206RE
	2-7/16	069820	FC-IP-207R	069852	FC-IP-207RE
	2-1/2	069821	FC-IP-208R	069853	FC-IP-208RE
22215	2-11/16	069822	FC-IP-211R	069854	FC-IP-211RE
	2-3/4	069823	FC-IP-212R	069855	FC-IP-212RE
	2-15/16	069824	FC-IP-215R	069856	FC-IP-215RE
	3	069825	FC-IP-300R	069857	FC-IP-300RE
22218	3-3/16	069826	FC-IP-303R	069858	FC-IP-303RE
	3-1/4	069827	FC-IP-304R	069859	FC-IP-304RE
	3-7/16	069828	FC-IP-307R	069860	FC-IP-307RE
	3-1/2	069829	FC-IP-308R	069861	FC-IP-308RE

Bearing series	Shaft size	Labyrinth seal			
		Non-expansion		Expansion	
		Part number	Description	Part number	Description
22208	1-1/8	069869	FC-IP-102L	069901	FC-IP-102LE
	1-3/16	069870	FC-IP-103L	069902	FC-IP-103LE
	1-1/4	069871	FC-IP-104L	069903	FC-IP-104LE
	1-3/8	069872	FC-IP-106L	069904	FC-IP-106LE
	1-7/16	069873	FC-IP-107L	069905	FC-IP-107LE
	1-1/2	069874	FC-IP-108L	069906	FC-IP-108LE
22209	1-5/8	069875	FC-IP-110L	069907	FC-IP-110LE
	1-11/16	069876	FC-IP-111L	069908	FC-IP-111LE
	1-3/4	069877	FC-IP-112L	069909	FC-IP-112LE
22210	1-7/8	069878	FC-IP-114L	069910	FC-IP-114LE
	1-15/16	069879	FC-IP-115L	069911	FC-IP-115LE
	2	069880	FC-IP-200L	069912	FC-IP-200LE
22211	2-3/16	069881	FC-IP-203L	069913	FC-IP-203LE
	2-1/4	069882	FC-IP-204L	069914	FC-IP-204LE
22213	2-3/8	069883	FC-IP-206L	069915	FC-IP-206LE
	2-7/16	069884	FC-IP-207L	069916	FC-IP-207LE
	2-1/2	069885	FC-IP-208L	069917	FC-IP-208LE
22215	2-11/16	069886	FC-IP-211L	069918	FC-IP-211LE
	2-3/4	069887	FC-IP-212L	069919	FC-IP-212LE
	2-15/16	069888	FC-IP-215L	069920	FC-IP-215LE
	3	069889	FC-IP-300L	069921	FC-IP-300LE
22218	3-3/16	069890	FC-IP-303L	069922	FC-IP-303LE
	3-1/4	069891	FC-IP-304L	069923	FC-IP-304LE
	3-7/16	069892	FC-IP-307L	069924	FC-IP-307LE
	3-1/2	069893	FC-IP-308L	069925	FC-IP-308LE

*Consult Dodge for sizes not listed.

Shaft size	A	B	C	D	DD	E	F bolt dia.	G	H	K*	L	M	N	P	Q	X total exp.	Y	Z
1-1/8 1-3/16 1-1/4 1-3/8 1-7/16 1-1/2	2.63	5.25	1.84	3.09	4.38	0.75	3/8	1.39	0.50	3. 625	2.72	3/8-16	2.61	1.23	1.22	3/16	0.02	1.80
1-5/8 1-11/16 1-3/4	2.81	6.13	1.91	3.63	5.13	0.88	7/16	1.61	0.50	4.250	3.00	7/16-14	2.86	1.20	1.27	1/4	0.02	2.08
1-7/8 1-15/16 2	2.86	6.38	2.00	3.80	5.38	0.88	7/16	1.59	0.56	4.500	3.28	7/16-14	2.86	1.27	1.27	1/4	0.02	2.30
2-3/16 2-1/4	3.03	7.13	2.19	4.25	6.00	1.00	1/2	1.67	0.56	5.000	3.50	1/2-13	3.08	1.38	1.42	1/4	0.025	2.60
2-3/8 2-7/16 2-1/2	3.42	7.63	2.50	4.59	6.50	1.00	1/2	1.88	0.63	5.500	3.88	1/2-13	3.44	1.55	1.56	1/4	0.025	2.95
2-11/16 2-3/4 2-15/16 3	3.50	8.75	2.63	5.30	7.50	1.25	5/8	1.94	0.75	6.375	4.28	5/8-11	3.56	1.56	1.63	1/4	0.025	3.47
3-3/16 3-1/4 3-7/16 3-1/2	4.17	10.25	3.00	6.09	8.63	1.27	3/4	2.53	0.94	7.375	5.00	3/4-10	4.06	1.64	1.52	1/4	0.025	4.05

* Pilot diameter tolerance = +0.000", -0.002"

IP piloted flange – inch

4-bolt

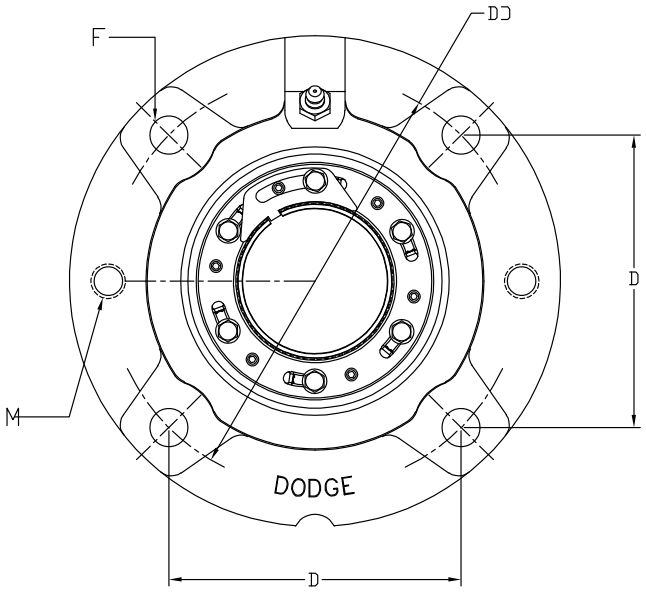

SIZES 311 - 500

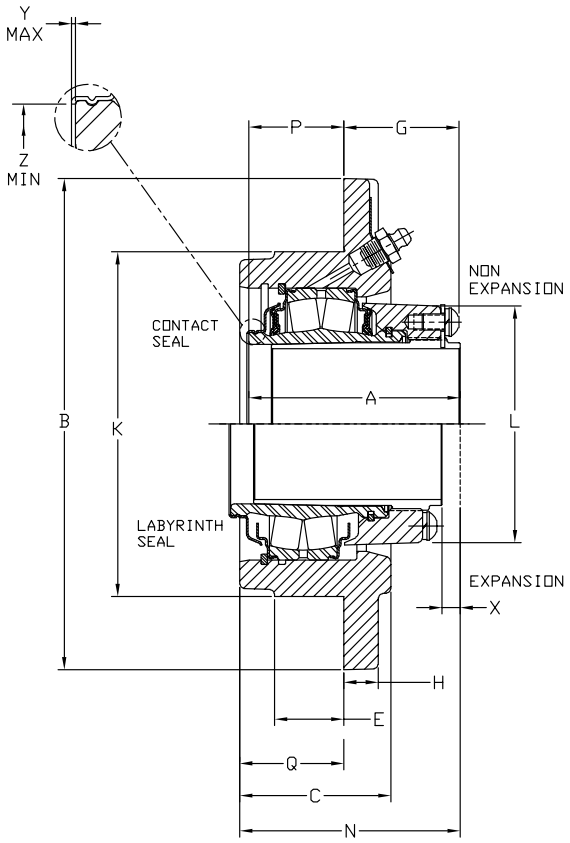

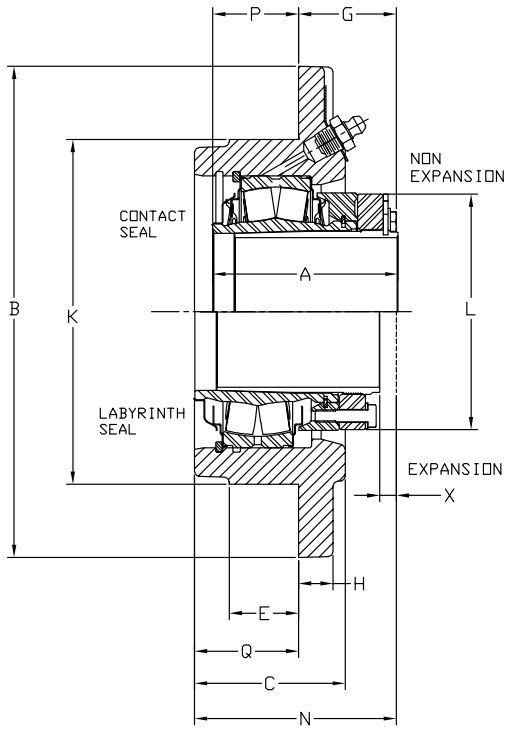

IP piloted flange – inch

4-bolt

Bearing series	Shaft size	Trident seal			
		Non-expansion		Expansion	
		Part number	Description	Part number	Description
22220	3-11/16	069830	FC-IP-311R	069862	FC-IP-311RE
	3-15/16	069831	FC-IP-315R	069863	FC-IP-315RE
	4	069832	FC-IP-400R	069864	FC-IP-400RE
22222	4-7/16	069833	FC-IP-407R	069865	FC-IP-407RE
	4-1/2	069834	FC-IP-408R	069866	FC-IP-408RE
22226	4-15/16	069835	FC-IP-415R	069867	FC-IP-415RE
	5	069836	FC-IP-500R	069868	FC-IP-500RE

*Consult Dodge for sizes not listed

Bearing series	Shaft size	Labyrinth seal			
		Non-expansion		Expansion	
		Part number	Description	Part number	Description
22220	3-11/16	069894	FC-IP-311L	069926	FC-IP-311LE
	3-15/16	069895	FC-IP-315L	069927	FC-IP-315LE
	4	069896	FC-IP-400L	069928	FC-IP-400LE
22222	4-7/16	069897	FC-IP-407L	069929	FC-IP-407LE
	4-1/2	069898	FC-IP-408L	069930	FC-IP-408LE
22226	4-15/16	069899	FC-IP-415L	069931	FC-IP-415LE
	5	069900	FC-IP-500L	069932	FC-IP-500LE

Shaft size	A	B	C	D	DD	E	F bolt dia.	G	H	K*	L	M	N	P	Q	X total exp.	Y	Z
3-11/16																		
3-15/16	4.82	10.88	3.50	6.63	9.38	1.47	3/4	3.01	1.13	8.125	5.56	3/4-10	4.39	1.81	1.91	5/16	0.025	4.50
4																		
4-7/16																		
4-1/2	5.48	13.50	4.00	5.88	11.75	1.45	3/4**	3.81	1.00	10.250	6.44	3/4-10	5.55	1.69	1.98	3/8	0.036	5.00
4-15/16																		
5	6.02	14.75	4.38	6.38	12.75	1.70	7/8**	3.90	1.25	11.000	7.63	3/4-10	6.28	2.13	2.42	3/8	0.036	5.84

* Pilot diameter tolerance = +0.000", -0.002"
** 6 holes, equally spaced.
"P" and "G" dimensions are for non-expansion only.
"A" and "P" dimensions do not include "Y" dimension.

IP piloted flange – inch

4-bolt, E-dimensioned

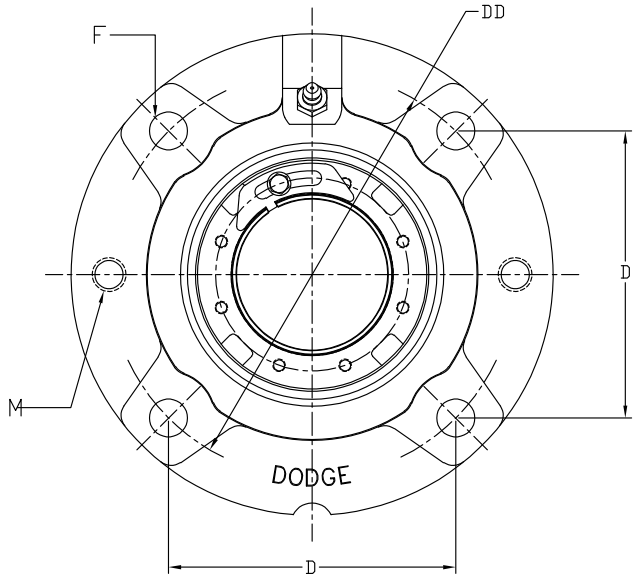

SIZES 106 - 308

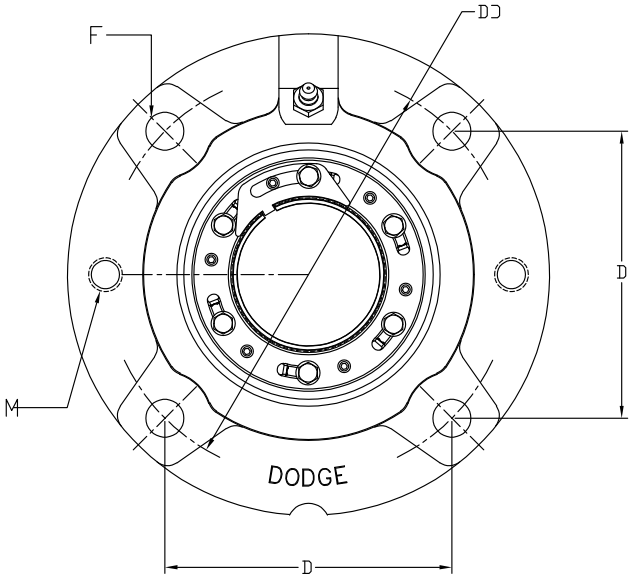

SIZES 315 - 500

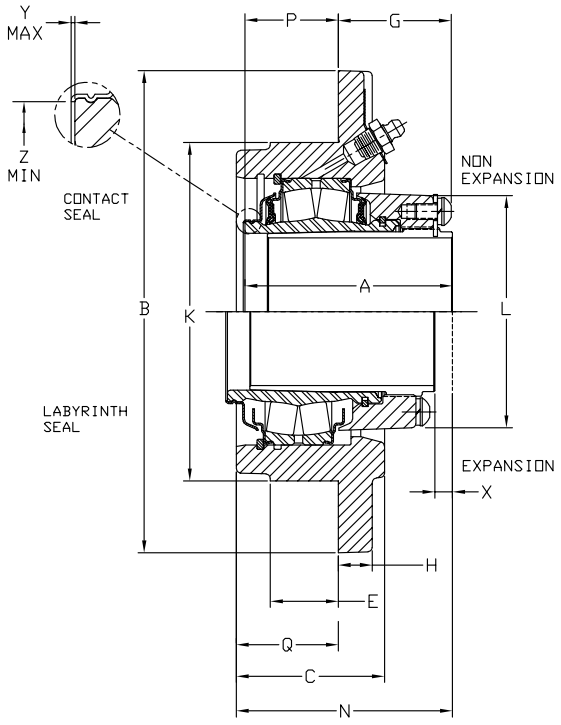

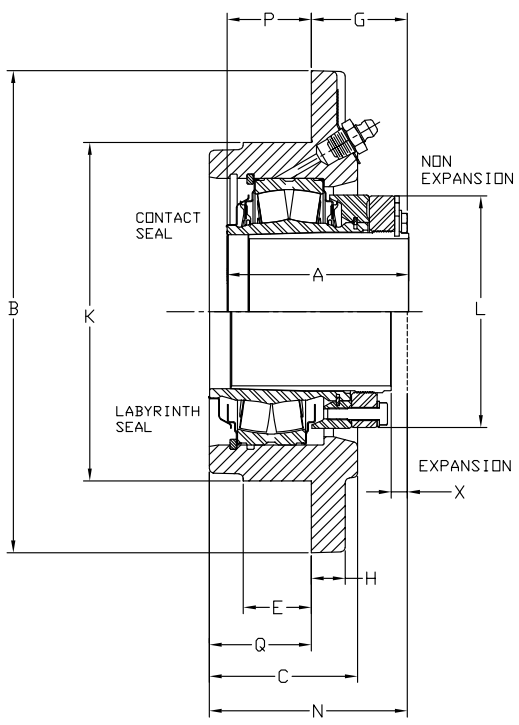

IP piloted flange – inch

4-bolt, E-dimensioned

Bearing series	Shaft size	Trident seal			
		Non-expansion		Expansion	
		Part number	Description	Part number	Description
22208	1-3/8	069808	FC-IP-106R	069840	FC-IP-106RE
	1-7/16	069809	FC-IP-107R	069841	FC-IP-107RE
22209	1-1/2	071576	EFC-IP-108R	071579	EFC-IP-108RE
	1-5/8	069811	FC-IP-110R	069843	FC-IP-110RE
	1-11/16	069812	FC-IP-111R	069844	FC-IP-111RE
22210	1-3/4	071577	EFC-IP-112R	071580	EFC-IP-112RE
	1-7/8	069814	FC-IP-114R	069846	FC-IP-114RE
	1-15/16	069815	FC-IP-115R	069847	FC-IP-115RE
	2	069816	FC-IP-200R	069848	FC-IP-200RE
22211	2-3/16	069817	FC-IP-203R	069849	FC-IP-203RE
22213	2-1/4	071578	EFC-IP-204R	071581	EFC-IP-204RE
	2-7/16	069820	FC-IP-207R	069852	FC-IP-207RE
	2-1/2	069821	FC-IP-208R	069853	FC-IP-208RE
22215	2-11/16	069822	FC-IP-211R	069854	FC-IP-211RE
	2-3/4	069823	FC-IP-212R	069855	FC-IP-212RE
	2-15/16	069824	FC-IP-215R	069856	FC-IP-215RE
	3	069825	FC-IP-300R	069857	FC-IP-300RE
22218	3-3/16	069826	FC-IP-303R	069858	FC-IP-303RE
	3-1/4	069827	FC-IP-304R	069859	FC-IP-304RE
	3-7/16	069828	FC-IP-307R	069860	FC-IP-307RE
	3-1/2	069829	FC-IP-308R	069861	FC-IP-308RE
22220	3-15/16	069831	FC-IP-315R	069863	FC-IP-315RE
	4	069832	FC-IP-400R	069864	FC-IP-400RE
22222	4-7/16	071272	EFC-IP-407R	071276	EFC-IP-407RE
	4-1/2	071273	EFC-IP-408R	071277	EFC-IP-408RE
22226	4-15/16	071274	EFC-IP-415R	071278	EFC-IP-415RE
	5	071275	EFC-IP-500R	071279	EFC-IP-500RE

Bearing series	Shaft size	Labyrinth seal			
		Non-expansion		Expansion	
		Part number	Description	Part number	Description
22208	1-3/8	069872	FC-IP-106L	069904	FC-IP-106LE
	1-7/16	069873	FC-IP-107L	069905	FC-IP-107LE
22209	1-1/2	071582	EFC-IP-108L	071585	EFC-IP-108LE
	1-5/8	069875	FC-IP-110L	069907	EC-IP-110LE
	1-11/16	069876	FC-IP-111L	069908	EC-IP-111LE
22210	1-3/4	071583	EFC-IP-112L	071586	EFC-IP-112LE
	1-7/8	069878	FC-IP-114L	069910	FC-IP-114LE
	1-15/16	069879	FC-IP-115L	069911	FC-IP-115LE
	2	069880	FC-IP-200L	069912	FC-IP-200LE
22211	2-3/16	069881	FC-IP-203L	069913	FC-IP-203LE
22213	2-1/4	071584	EFC-IP-204L	071587	EFC-IP-204LE
	2-7/16	069884	FC-IP-207L	069916	FC-IP-207LE
	2-1/2	069885	FC-IP-208L	069917	FC-IP-208LE
22215	2-11/16	069886	FC-IP-211L	069918	FC-IP-211LE
	2-3/4	069887	FC-IP-212L	069919	FC-IP-212LE
	2-15/16	069888	FC-IP-215L	069920	FC-IP-215LE
	3	069889	FC-IP-300L	069921	FC-IP-300LE
22218	3-3/16	069890	FC-IP-303L	069922	FC-IP-303LE
	3-1/4	069891	FC-IP-304L	069923	FC-IP-304LE
	3-7/16	069892	FC-IP-307L	069924	FC-IP-307LE
	3-1/2	069893	FC-IP-308L	069925	FC-IP-308LE
22220	3-15/16	069895	FC-IP-315L	069927	FC-IP-315LE
	4	069896	FC-IP-400L	069928	FC-IP-400LE
22222	4-7/16	071280	EFC-IP-407L	071284	EFC-IP-407LE
	4-1/2	071281	EFC-IP-408L	071285	EFC-IP-408LE
22226	4-15/16	071282	EFC-IP-415L	071286	EFC-IP-415LE
	5	071283	EFC-IP-500L	071287	EFC-IP-500LE

*Consult Dodge for sizes not listed.

Shaft size	A	B	C	D	DD	E	F bolt dia.	G	H	K*	L	M	N	P	Q	X total exp.	Y	Z
1-3/8 1-7/16	2.63	5.25	1.84	3.09	4.38	0.75	3/8	1.39	0.50	3.625	2.72	3/8-16	2.61	1.23	1.22	3/16	0.02	1.80
1-1/2 1-5/8 1-11/16	2.81	6.13	1.91	3.63	5.13	0.88	7/16	1.61	0.50	4.250	3.00	7/16-14	2.86	1.20	1.26	1/4	0.02	2.08
1-3/4 1-7/8 1-15/16 2	2.86	6.38	2.00	3.80	5.38	0.88	7/16	1.59	0.56	4.500	3.28	7/16-14	2.86	1.26	1.26	1/4	0.02	2.30
2-3/16	3.03	7.13	2.19	4.25	6.00	1.00	1/2	1.66	0.56	5.000	3.50	1/2-13	3.08	1.38	1.42	1/4	0.03	2.59
2-1/4 2-7/16 2-1/2	3.42	7.63	2.50	4.59	6.50	1.00	1/2	1.88	0.63	5.500	3.88	1/2-13	3.44	1.55	1.56	1/4	0.03	2.94
2-11/16 2-3/4 2-15/16 3	3.50	8.75	2.63	5.30	7.50	1.25	5/8	1.94	0.75	6.375	4.28	5/8-11	3.56	1.56	1.63	1/4	0.03	3.47
3-3/16 3-1/4 3-7/16 3-1/2	4.17	10.25	3.00	6.09	8.63	1.26	3/4	2.53	0.94	7.375	5.00	3/4-10	4.06	1.64	1.52	1/4	0.03	4.05
3-15/16 4	4.82	10.88	3.50	6.63	9.38	1.47	3/4	3.01	1.13	8.125	5.56	3/4-10	4.78	1.81	1.91	5/16	0.025	4.50
4-7/16 4-1/2	5.48	13.50	4.58	5.88	11.75	1.45	3/4 **	3.81	0.94	10.250	6.44	3/4-10	5.66	2.20	2.63	3/8	0.036	5.00
4-15/16 5	6.02	14.75	4.88	6.38	12.75	1.70	7/8 **	3.90	1.25	11.000	7.63	3/4-10	6.41	2.59	3.01	3/8	0.036	5.84

* Pilot diameter tolerance = +0.000", -0.002"
** 6 holes, equally spaced
"P" and "G" dimensions are for non-expansion only
"A" and "P" dimensions do not include "Y" dimension

IP piloted flange – inch

4-bolt, steel (HD)

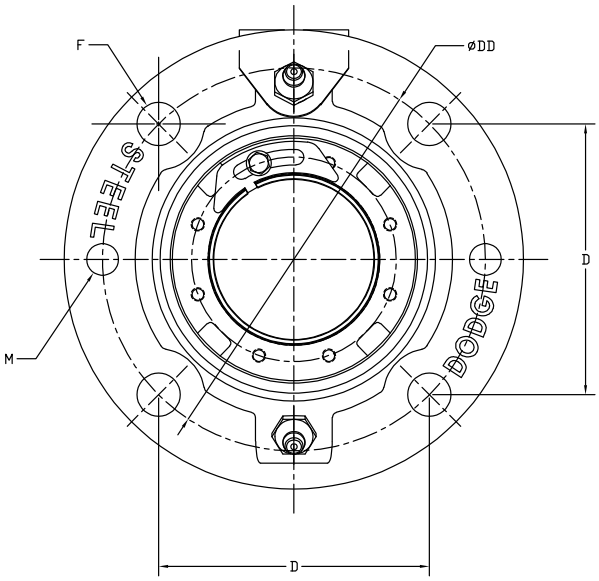

SIZES 102 - 308

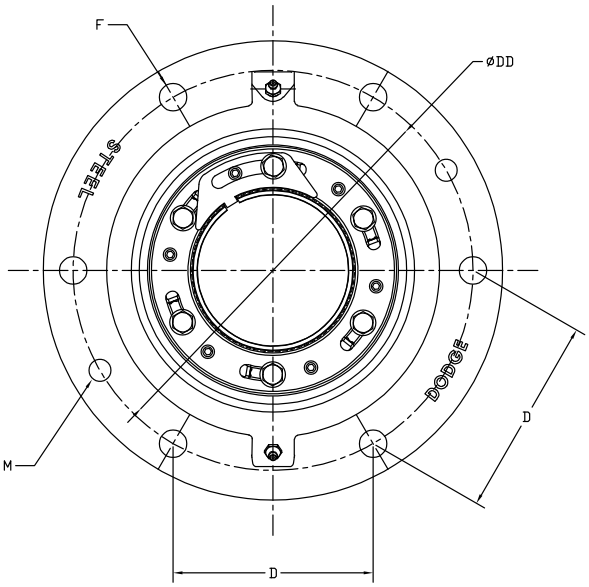

SIZES 311 - 500

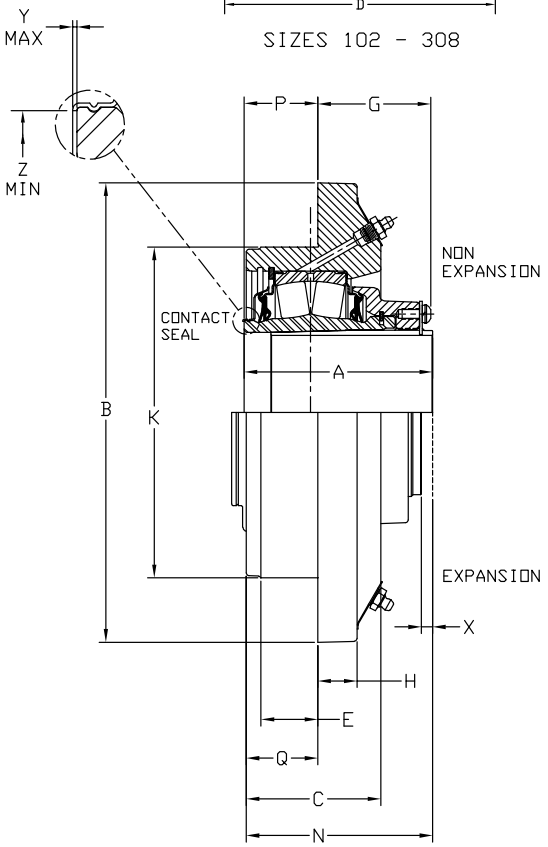

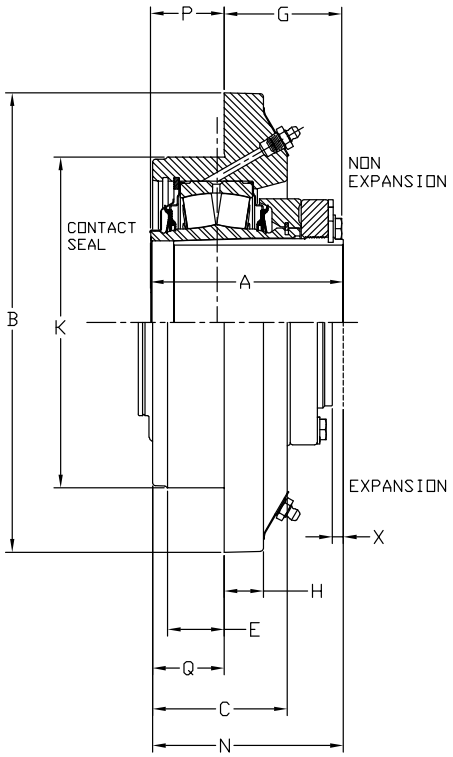

IP piloted flange – inch

4-bolt, steel (HD)

Shaft size	Non-expansion	
	Part number	Description
1-1/8	072276	SFC-IP-102R
1-3/16	072277	SFC-IP-103R
1-1/4	072278	SFC-IP-104R
1-3/8	072279	SFC-IP-106R
1-7/16	072280	SFC-IP-107R
1-1/2	072281	SFC-IP-108R
1-5/8	072282	SFC-IP-110R
1-11/16	072283	SFC-IP-111R
1-3/4	072284	SFC-IP-112R
1-7/8	072285	SFC-IP-114R
1-15/16	072286	SFC-IP-115R
2	072287	SFC-IP-200R
2-3/16	072288	SFC-IP-203R
2-1/4	072289	SFC-IP-204R
2-7/16	072290	SFC-IP-207R
2-1/2	072291	SFC-IP-208R
2-11/16	072292	SFC-IP-211R
2-3/4	072293	SFC-IP-212R
2-15/16	072294	SFC-IP-215R
3	072295	SFC-IP-300R
3-3/16	072296	SFC-IP-303R
3-1/4	072297	SFC-IP-304R
3-7/16	072298	SFC-IP-307R
3-1/2	072299	SFC-IP-308R
3-11/16	072300	SFC-IP-311R
3-15/16	072301	SFC-IP-315R
4	072302	SFC-IP-400R
4-7/16	072303	SFC-IP-407R
4-1/2	072304	SFC-IP-408R
4-15/16	072305	SFC-IP-415R
5	072306	SFC-IP-500R

Shaft size	Expansion	
	Part number	Description
1-1/8	072307	SFC-IP-102RE
1-3/16	072308	SFC-IP-103RE
1-1/4	072309	SFC-IP-104RE
1-3/8	072310	SFC-IP-106RE
1-7/16	072311	SFC-IP-107RE
1-1/2	072312	SFC-IP-108RE
1-5/8	072313	SFC-IP-110RE
1-11/16	072314	SFC-IP-111RE
1-3/4	072315	SFC-IP-112RE
1-7/8	072316	SFC-IP-114RE
1-15/16	072317	SFC-IP-115RE
2	072318	SFC-IP-200RE
2-3/16	072319	SFC-IP-203RE
2-1/4	072320	SFC-IP-204RE
2-7/16	072321	SFC-IP-207RE
2-1/2	072322	SFC-IP-208RE
2-11/16	072323	SFC-IP-211RE
2-3/4	072324	SFC-IP-212RE
2-15/16	072325	SFC-IP-215RE
3	072326	SFC-IP-300RE
3-3/16	072327	SFC-IP-303RE
3-1/4	072328	SFC-IP-304RE
3-7/16	072329	SFC-IP-307RE
3-1/2	072330	SFC-IP-308RE
3-11/16	072331	SFC-IP-311RE
3-15/16	072332	SFC-IP-315RE
4	072333	SFC-IP-400RE
4-7/16	072334	SFC-IP-407RE
4-1/2	072335	SFC-IP-408RE
4-15/16	072336	SFC-IP-415RE
5	072337	SFC-IP-500RE

*Consult Dodge for sizes not listed.

IP piloted flange – inch

4-bolt, steel (HD)

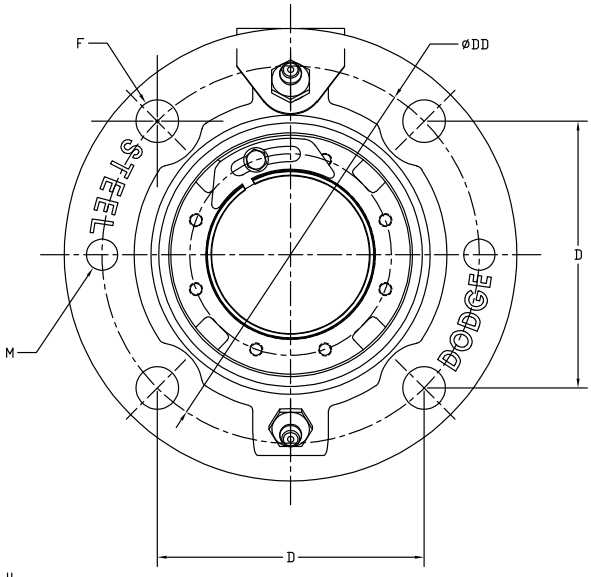

SIZES 102 - 308

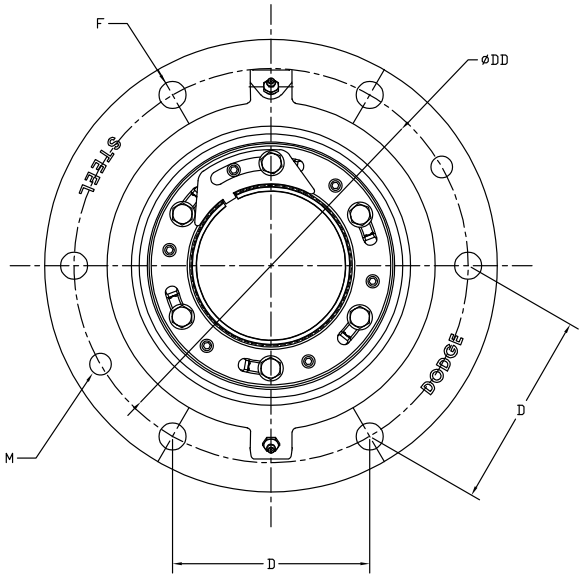

SIZES 311 - 500

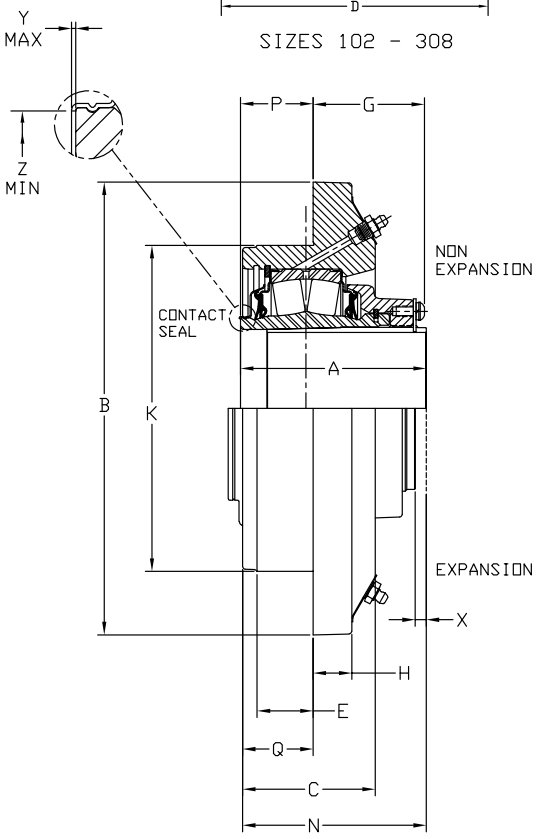

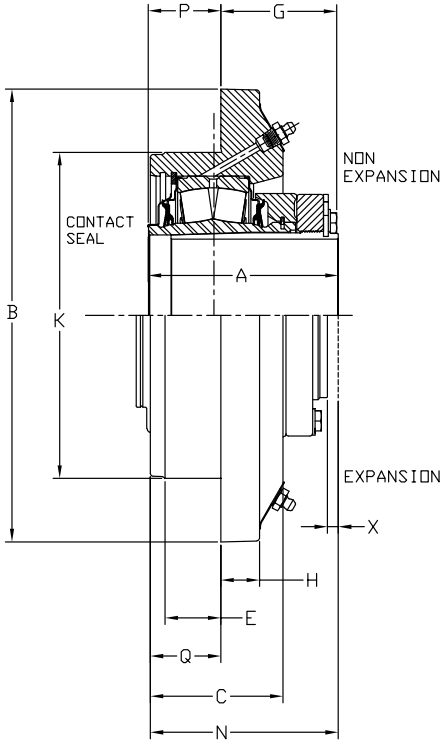

IP piloted flange – inch

4-bolt, steel (HD)

Shaft size	A	B	C	D	DD	E	F bolt dia.	G	H	K*	L	M	N	P	Q	X total exp.	Y	Z
1-1/8																		
1-3/16																		
1-1/4	2.63	5.25	1.84	3.09	4.38	0.75	3/8	1.39	0.50	3.625	2.36	3/8-16	2.61	1.23	1.22	3/16	0.02	1.80
1-3/8																		
1-7/16																		
1-1/2																		
1-5/8																		
1-11/16	2.81	6.13	1.91	3.63	5.13	0.88	7/16	1.61	0.50	4.250	3.00	7/16-14	2.86	1.20	1.27	1/4	0.02	2.08
1-3/4																		
1-7/8																		
1-15/16	2.86	6.38	2.00	3.80	5.38	0.88	7/16	1.59	0.56	4.500	3.28	7/16-14	2.86	1.27	1.27	1/4	0.02	2.30
2																		
2-3/16	3.03	7.13	2.19	4.25	6.00	1.00	1/2	1.57	0.56	5.000	3.50	1/2-13	3.08	1.38	1.42	1/4	0.025	2.60
2-1/4																		
2-3/8																		
2-7/16	3.43	7.63	2.50	4.60	6.50	1.00	1/2	1.88	0.63	5.500	3.88	1/2-13	3.44	1.55	1.56	1/4	0.025	2.94
2-1/2																		
2-11/16																		
2-3/4																		
2-15/16	3.50	8.75	2.63	5.30	7.50	1.25	5/8	1.94	0.75	6.375	4.28	5/8-11	3.56	1.56	1.63	1/4	0.025	3.47
3																		
3-3/16																		
3-1/4																		
3-7/16	4.17	10.25	3.00	6.09	8.63	1.27	3/4	2.53	0.94	7.375	5.00	3/4-10	4.06	1.64	1.52	1/4	0.025	4.05
3-1/2																		
3-11/16																		
3-15/16	4.82	10.88	3.50	6.63	9.38	1.47	3/4	3.01	1.13	8.125	5.56	3/4-10	4.39	1.83	1.91	3/16	0.025	4.50
4																		
4-7/16	5.48	13.50	4.00	5.86	11.75	1.45	3/4**	3.81	1.00	10.250	6.44	3/4-10	5.55	1.69	1.98	3/8	0.036	5.00
4-1/2																		
4-15/16	6.02	14.75	4.38	6.38	12.75	1.70	7/8**	3.90	1.25	11.000	7.63	3/4-10	6.28	2.13	2.42	3/8	0.036	5.84
5																		

* Pilot diameter tolerance = +0.000", -0.002"

** 6 holes, equally spaced.

"P" and "G" dimensions are for non-expansion only.

"A" and "P" dimensions do not include "Y" dimension.

IP narrow piloted flange – inch

4-bolt, steel (HD)

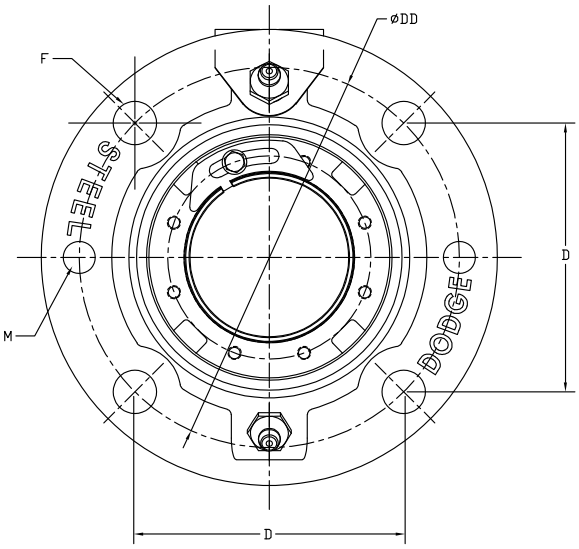

SIZES 107 - 308

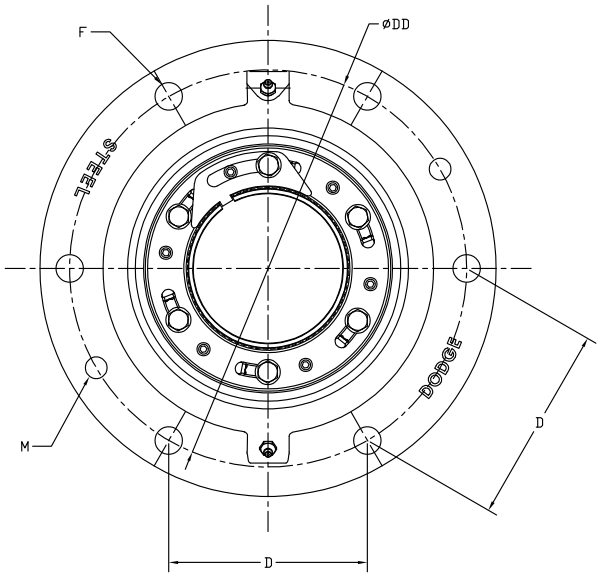

SIZES 311 - 405

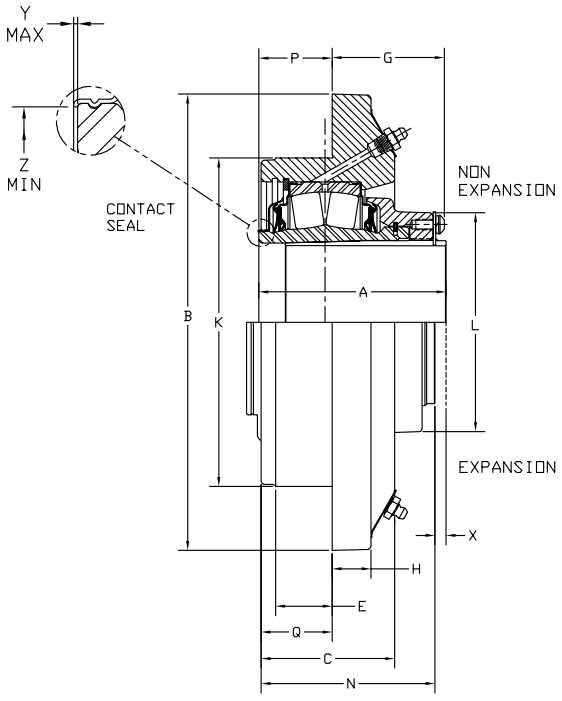

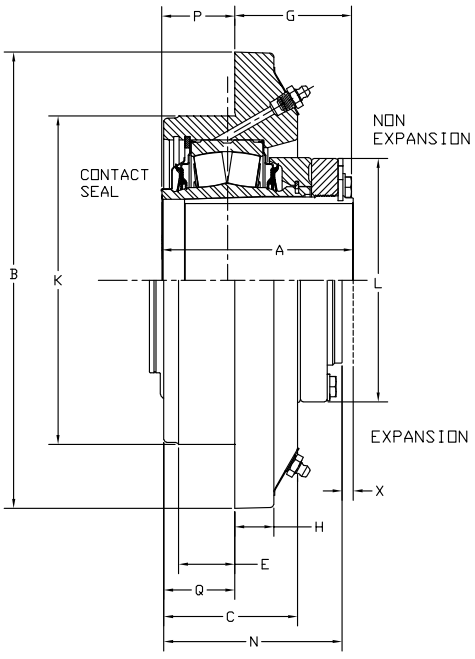

IP narrow piloted flange – inch

4-bolt, steel (HD)

Shaft size	Part number	Description
1-7/16	072338	SFCN-IP-107R
1-1/2	072339	SFCN-IP-108R
1-11/16	072340	SFCN-IP-111R
1-3/4	072341	SFCN-IP-112R
1-15/16	072342	SFCN-IP-115R
2	072343	SFCN-IP-200R
2-3/16	072344	SFCN-IP-203R
2-1/4	072345	SFCN-IP-204R
2-7/16	072346	SFCN-IP-207R
2-1/2	072347	SFCN-IP-208R
2-11/16	072348	SFCN-IP-211R
2-3/4	072349	SFCN-IP-212R
2-15/16	072350	SFCN-IP-215R
3	072351	SFCN-IP-300R
3-3/16	072352	SFCN-IP-303R
3-1/4	072353	SFCN-IP-304R
3-7/16	072354	SFCN-IP-307R
3-1/2	072355	SFCN-IP-308R
3-11/16	072356	SFCN-IP-311R
3-15/16	072358	SFCN-IP-315R
4	072359	SFCN-IP-400R
4-7/16	072360	SFCN-IP-407R
4-1/2	072361	SFCN-IP-408R

Shaft size	Part number	Description
1-7/16	072362	SFCN-IP-107RE
1-1/2	072363	SFCN-IP-108RE
1-11/16	072364	SFCN-IP-111RE
1-3/4	072365	SFCN-IP-112RE
1-15/16	072366	SFCN-IP-115RE
2	072367	SFCN-IP-200RE
2-3/16	072368	SFCN-IP-203RE
2-1/4	072369	SFCN-IP-204RE
2-7/16	072370	SFCN-IP-207RE
2-1/2	072371	SFCN-IP-208RE
2-11/16	072372	SFCN-IP-211RE
2-3/4	072373	SFCN-IP-212RE
2-15/16	072374	SFCN-IP-215RE
3	072375	SFCN-IP-300RE
3-3/16	072376	SFCN-IP-303RE
3-1/4	072377	SFCN-IP-304RE
3-7/16	072378	SFCN-IP-307RE
3-1/2	072379	SFCN-IP-308RE
3-11/16	072380	SFCN-IP-311RE
3-15/16	072382	SFCN-IP-315RE
4	072383	SFCN-IP-400RE
4-7/16	072384	SFCN-IP-407RE
4-1/2	072385	SFCN-IP-408RE

Shaft size	A	B	C	D	DD	E	F bolt dia.	G	H	K*	L	M	N	P	Q	X total exp.	Y	Z
1-7/16 1-1/2	2.63	5.25	1.93	3.09	4.38	0.75	7/16	1.84	0.50	3.625	2.72	7/16 - 14	2.61	0.79	0.94	3/16	0.02	1.80
1-11/16 1-3/4	2.81	6.13	1.95	3.62	5.13	0.88	7/16	2.09	0.50	4.250	3.00	7/16 - 14	2.86	0.73	0.88	1/4	0.02	2.08
1-15/16 2	2.86	6.38	2.10	3.80	5.38	0.88	7/16	1.99	0.63	4.500	3.28	7/16 - 14	2.86	0.88	1.06	1/4	0.02	2.30
2-3/16 2-1/4	3.03	7.30	2.22	4.24	6.00	1.00	1/2	2.06	0.58	5.000	3.50	1/2-13	3.08	1.00	1.13	1/4	0.025	2.60
2-7/16 2-1/2	3.42	7.63	2.35	4.60	6.50	1.00	1/2	2.40	0.70	5.500	3.80	1/2-13	3.44	1.04	1.13	1/4	0.025	2.94
2-11/16 2-3/4 2-15/16 3	3.50	8.75	2.47	5.30	7.50	1.25	5/8	2.35	0.81	6.375	4.28	5/8 - 11	3.56	1.15	1.25	1/4	0.025	3.47
3-3/16 3-1/4 3-7/16 3-1/2	4.17	10.34	2.79	6.10	8.63	1.27	3/4	2.88	1.00	7.375	5.00	3/4 - 10	4.06	1.30	1.31	1/4	0.025	4.05
3-11/16 3-15/16 4	4.82	10.88	3.50	6.63	9.38	1.47	3/4	2.94	1.13	8.125	5.56	3/4 - 10	4.39	1.71	2.13	5/16	0.025	4.50
4-7/16 4-1/2	5.48	13.50	4.00	5.89	11.75	1.45	3/4 **	3.76	1.00	10.250	6.44	3/4 - 10	5.55	1.44	1.90	3/8	0.036	5.00

* Pilot diameter tolerance = +0.000", -0.002"

** 6 holes, equally spaced.

"P" dimension is for non-expansion only.

"A" and "R" dimensions do not include "Y" dimension.

IP take-up – inch

Wide-slot (WS)

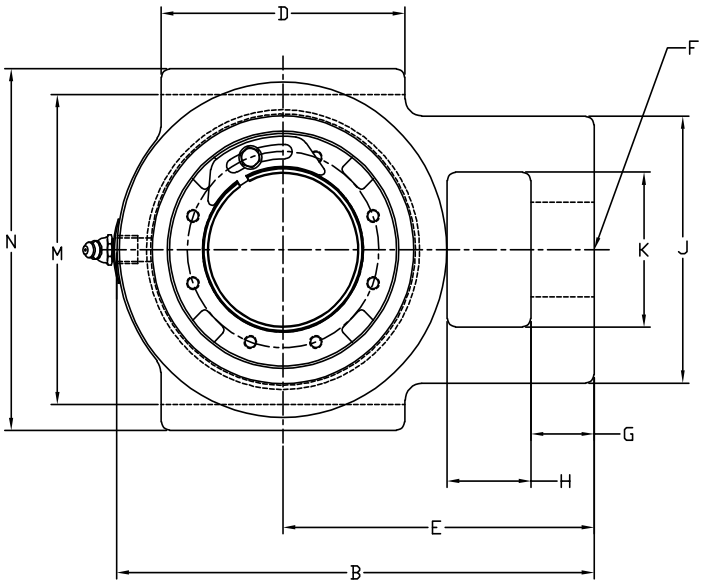

SIZES 102 - 308

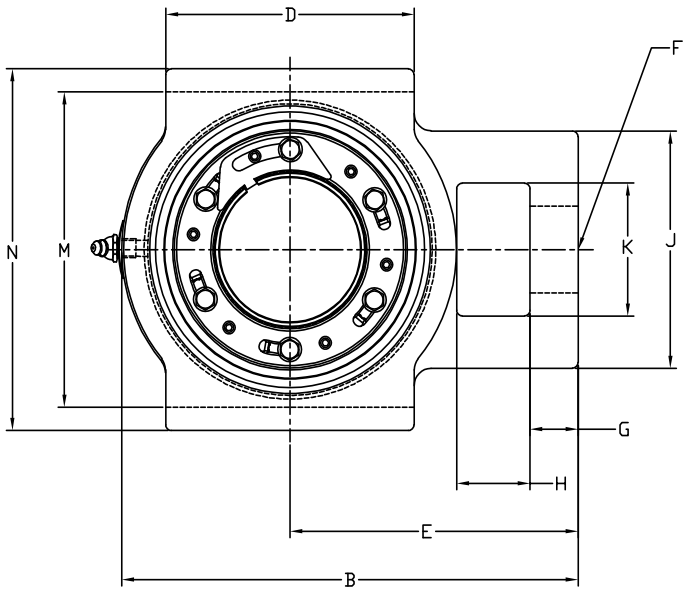

SIZES 311 - 515

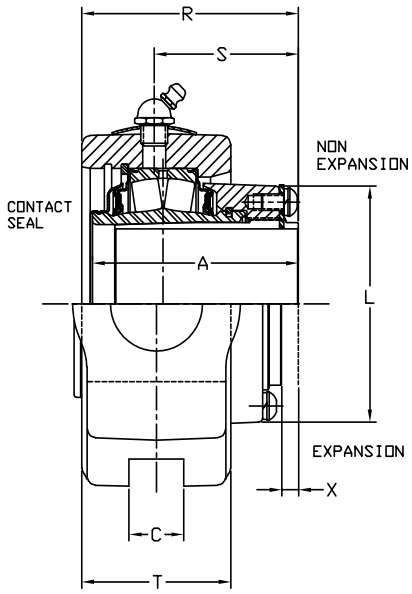

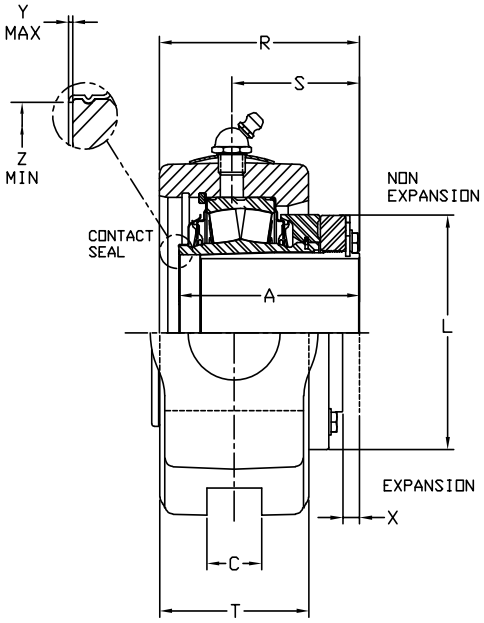

IP take-up – inch

Wide-slot (WS)

Bearing series	Shaft size	Take-up frame	Trident seal			
			Non-expansion		Expansion	
			Part number	Description	Part number	Description
22208	1-1/8	CP-308	069340	WSTU-IP-102R	069368	WSTU-IP-102RE
	1-3/16		069341	WSTU-IP-103R	069369	WSTU-IP-103RE
	1-1/4		069342	WSTU-IP-104R	069370	WSTU-IP-104RE
	1-3/8		069343	WSTU-IP-106R	069371	WSTU-IP-106RE
	1-7/16		069344	WSTU-IP-107R	069372	WSTU-IP-107RE
	1-1/2		069345	WSTU-IP-108R	069373	WSTU-IP-108RE
22209	1-5/8	CP-400	069346	WSTU-IP-110R	069374	WSTU-IP-110RE
	1-11/16		069347	WSTU-IP-111R	069375	WSTU-IP-111RE
	1-3/4		069348	WSTU-IP-112R	069376	WSTU-IP-112RE
22210	1-7/8	CP-400	069349	WSTU-IP-114R	069377	WSTU-IP-114RE
	1-15/16		069350	WSTU-IP-115R	069378	WSTU-IP-115RE
	2		069351	WSTU-IP-200R	069379	WSTU-IP-200RE
22211	2-3/16	CP-408	069352	WSTU-IP-203R	069380	WSTU-IP-203RE
	2-1/4		069353	WSTU-IP-204R	069381	WSTU-IP-204RE
22213	2-3/8	CP-502	069354	WSTU-IP-206R	069382	WSTU-IP-206RE
	2-7/16		069355	WSTU-IP-207R	069383	WSTU-IP-207RE
	2-1/2		069356	WSTU-IP-208R	069384	WSTU-IP-208RE
22215	2 -11/16	CP-515	069357	WSTU-IP-211R	069385	WSTU-IP-211RE
	2-3/4		069358	WSTU-IP-212R	069386	WSTU-IP-212RE
	2-15/16		069359	WSTU-IP-215R	069387	WSTU-IP-215RE
	3		069360	WSTU-IP-300R	069388	WSTU-IP-300RE
22218	3-3/16	CP-613	069361	WSTU-IP-303R	069389	WSTU-IP-303RE
	3-1/4		069362	WSTU-IP-304R	069390	WSTU-IP-304RE
	3-7/16		069363	WSTU-IP-307R	069391	WSTU-IP-307RE
	3-1/2		069364	WSTU-IP-308R	069392	WSTU-IP-308RE

*Consult Dodge for sizes not listed.

Shaft size	A	B	C	D	E	F	G	H	J	K	L	M	N	R	S	T	X total exp.	Y	Z
1-1/8 1-3/16 1-1/4 1-3/8 1-7/16 1-1/2	2.63	5.06	0.53	2.75	3.19	7/8	0.69	0.63	2.44	1.44	2.72	3.50	4.13	2.83	1.73	2.06	3/16	0.02	1.80
1-5/8 1-11/16 1-3/4	2.81	5.94	0.69	3.13	3.81	1-1/8	0.94	0.75	3.31	1.94	3.00	4.00	4.75	2.97	1.98	2.03	1/4	0.02	2.08
1-7/8 1-15/16 2	2.86	6.19	0.69	3.63	3.94	1-1/8	0.94	0.75	3.31	1.94	3.28	4.00	4.75	2.94	2.00	2.00	1/4	0.02	2.30
2-3/16 2-1/4	3.03	7.06	0.81	3.63	4.63	1-3/8	0.94	1.25	3.88	2.25	3.50	4.50	5.25	3.19	2.11	2.22	1/4	0.03	2.60
2-3/8 2-7/16 2-1/2	3.42	7.69	1.06	4.38	5.00	1-3/8	1.06	1.25	4.25	2.50	3.83	5.13	5.88	3.44	2.22	2.44	1/4	0.03	2.95
2 -11/16 2-3/4 2-15/16 3	3.50	8.88	1.81	4.50	5.75	1-5/8	1.13	1.50	4.88	2.75	4.28	5.94	6.69	3.67	2.28	2.69	1/4	0.03	3.47
3-3/16 3-1/4 3-7/16 3-1/2	4.16	10.06	1.81	5.50	6.38	1-7/8	1.06	1.63	5.13	2.88	5.00	6.81	7.81	4.22	2.69	3.06	1/4	0.03	4.05

"A" Dimensions do not include "Y" dimension.

IP take-up – inch

Wide-slot (WS)

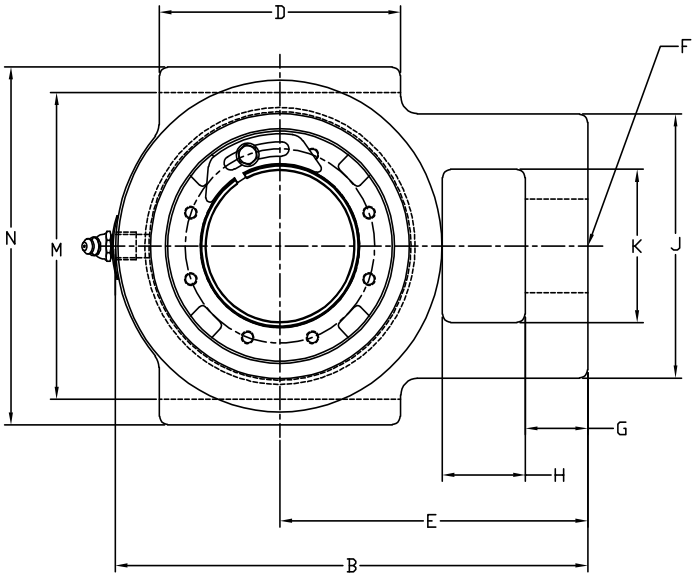

SIZES 102 - 308

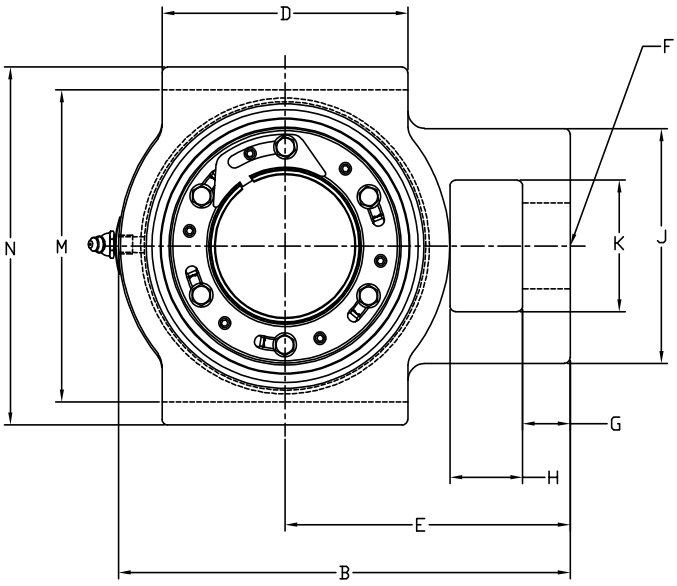

SIZES 311 - 515

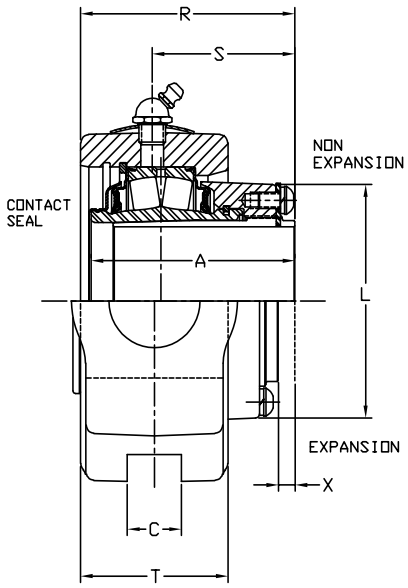

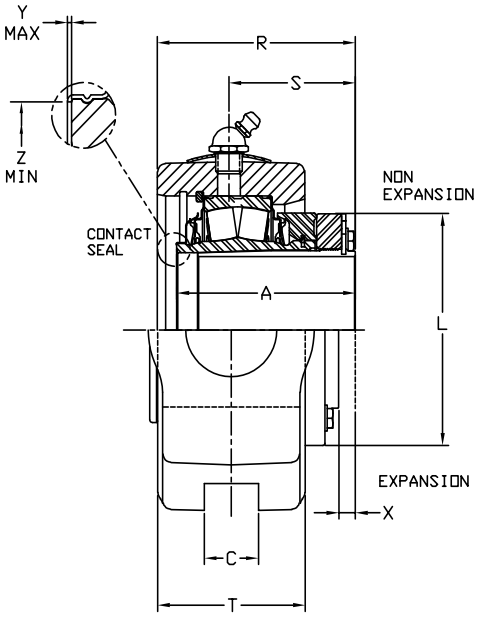

IP take-up – inch

Wide-slot (WS)

Bearing series	Shaft size	Take-up frame	Trident seal			
			Non-expansion		Expansion	
			Part number	Description	Part number	Description
22220	3-11/16	CP-810	069365	WSTU-IP-311R	069393	WSTU-IP-311RE
	3-15/16		069366	WSTU-IP-315R	069394	WSTU-IP-315RE
	4		069367	WSTU-IP-400R	069395	WSTU-IP-400RE
22222	4-7/16	CP-908	—	WSTU-IP-407R	—	WSTU-IP-407RE
	4-1/2		049878	WSTU-IP-408R	049418	WSTU-IP-408RE
22226	4-15/16	CP-1004	049830	WSTU-IP-415R	049831	WSTU-IP-415RE
	5		064239	WSTU-IP-500R	064240	WSTU-IP-500RE

*Consult Dodge for sizes not listed.

Shaft size	A	B	C	D	E	F	G	H	J	K	L	M	N	R	S	T	X total exp.	Y	Z
3-11/16	4.70	12.56	2.06	7	8.38	2-1/8	2.06	2.13	6	3.38	5.56	8.63	9.44	4.80	3.05	3.44	5/16	0.03	4.50
3-15/16																			
4																			
4-7/16	5.23	13.38	2.06	7	8.75	2-1/8	2	2.13	6.38	3.38	6.94	9.50	10.31	5.38	3.50	3.77	3/8	0.04	5
4-1/2																			
4-15/16	5.98	15.63	2.06	9	10.31	2-3/8	2.50	2.50	7	3.75	8.13	10.25	11.25	7.16	5.06	4.19	3/8	0.04	5.84
5																			

"A" Dimensions do not include "Y" dimension.

Safety Mount bearing insert – inch

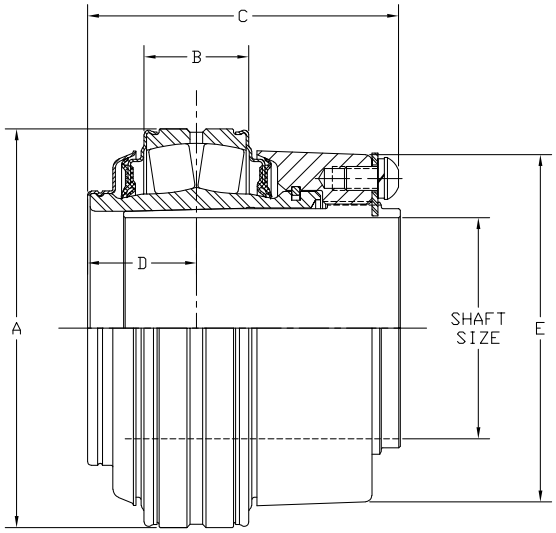

102 – 308
CONTACT SEAL

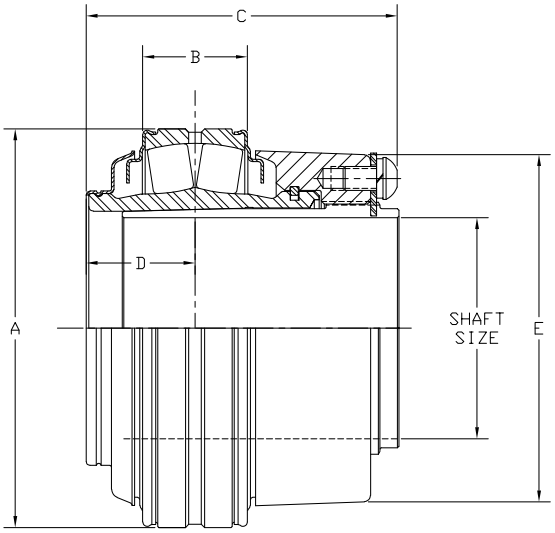

102 – 308
LABYRINTH SEAL

Bearing series	Shaft size	Trident seal		Labyrinth seal		A	B	C	D	E
		Part number	Description	Part number	Description					
22208	1-1/8	070880	INS-IP-102R	070912	INS-IP-102L	3.15	61/64	2.63	0.97	2.72
	1-3/16	070881	INS-IP-103R	070913	INS-IP-103L					
	1-1/4	070882	INS-IP-104R	070914	INS-IP-104L					
	1-3/8	070883	INS-IP-106R	070915	INS-IP-106L					
	1-7/16	070884	INS-IP-107R	070916	INS-IP-107L					
	1-1/2	070885	INS-IP-108R	070917	INS-IP-108L					
22209	1-1/2 *	071590	INS-IPE-108R	071593	INS-IPE-108L	3.35	0.95	2.81	0.95	3.00
	1-5/8	070886	INS-IP-110R	070918	INS-IP-110L					
	1-11/16	070887	INS-IP-111R	070919	INS-IP-111L					
	1-3/4	070888	INS-IP-112R	070920	INS-IP-112L					
22210	1-3/4 *	071591	INS-IPE-112R	071594	INS-IPE-112L	3.54	0.95	2.86	0.98	3.28
	1-7/8	070889	INS-IP-114R	070921	INS-IP-114L					
	1-15/16	070890	INS-IP-115R	070922	INS-IP-115L					
	2	070891	INS-IP-200R	070923	INS-IP-200L					
22211	2-3/16	070892	INS-IP-203R	070924	INS-IP-203L	3.94	1.05	3.03	1.05	3.50
	2-1/4	070893	INS-IP-204R	070925	INS-IP-204L					
22213	2-1/4 *	071592	INS-IPE-204R	071595	INS-IPE-204L	4.72	1.28	3.42	1.21	3.88
	2-3/8	070894	INS-IP-206R	070926	INS-IP-206L					
	2-7/16	070895	INS-IP-207R	070927	INS-IP-207L					
	2-1/2	070896	INS-IP-208R	070928	INS-IP-208L					
22215	2-11/16	070897	INS-IP-211R	070929	INS-IP-211L	5.12	1.28	3.50	1.22	4.28
	2-3/4	070898	INS-IP-212R	070930	INS-IP-212L					
	2-15/16	070899	INS-IP-215R	070931	INS-IP-215L					
	3	070900	INS-IP-300R	070932	INS-IP-300L					
22218	3-3/16	070901	INS-IP-303R	070933	INS-IP-303L	6.30	1.63	4.17	1.48	5.00
	3-1/4	070902	INS-IP-304R	070934	INS-IP-304L					
	3-7/16	070903	INS-IP-307R	070935	INS-IP-307L					
	3-1/2	070904	INS-IP-308R	070936	INS-IP-308L					

* Inserts for Safety Mount-Type E dimensioned housings only.

Metric shaft sizes available upon request.

Safety Mount bearing insert – inch

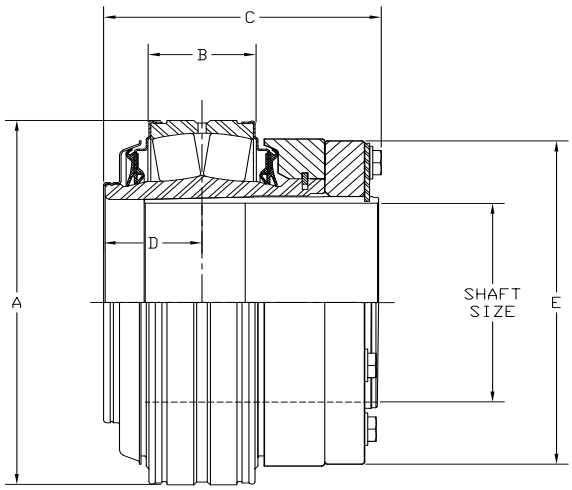

311 – 700
CONTACT SEAL

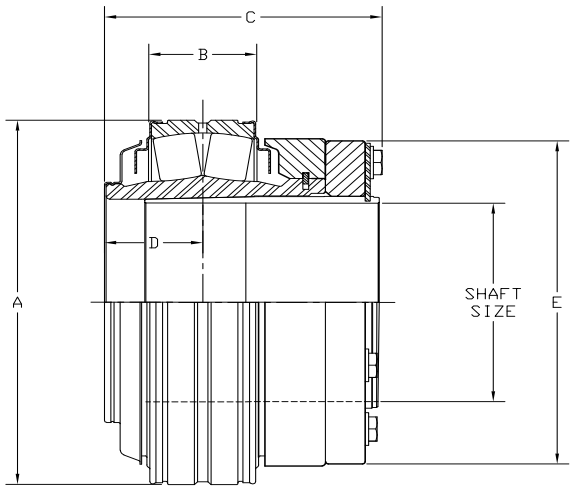

311 – 700
LABYRINTH SEAL

Bearing series	Shaft size	Trident seal		Labyrinth seal		A	B	C	D	E
		Part number	Description	Part number	Description					
22220	3-11/16	070905	INS-IP-311R	070937	INS-IP-311L	7.09	1.88	4.82	1.65	5.56
	3-15/16	070906	INS-IP-315R	070938	INS-IP-315L					
	4	070907	INS-IP-400R	070939	INS-IP-400L					
22222	4-7/16	070908	INS-IP-407R	070940	INS-IP-407L	7.87	2.16	5.48	1.94	6.44
	4-1/2	070909	INS-IP-408R	070941	INS-IP-408L					
22226	4-15/16	070910	INS-IP-415R	070942	INS-IP-415L	9.06	2.59	6.02	2.11	7.63
	5	070911	INS-IP-500R	070943	INS-IP-500L					
22228	5-7/16	037925	INS-IP-507R	037933	INS-IP-507L	9.84	2.75	6.48	2.34	8.75
	5-1/2	037926	INS-IP-508R	037934	INS-IP-508L					
22232	5-15/16	037927	INS-IP-515R	037935	INS-IP-515L	11.42	3.22	7.40	2.77	10.25
	6	037928	INS-IP-600R	037936	INS-IP-600L					
22236	6-7/16	037929	INS-IP-607R	037937	INS-IP-607L	12.60	3.47	7.63	2.86	11.41
	6-1/2	037930	INS-IP-608R	037938	INS-IP-608L					
	6-15/16	037931	INS-IP-615R	037939	INS-IP-615L					
	7	037932	INS-IP-700R	037940	INS-IP-700L					
22240	7-3/16	231330	INS-IP-703R	231339	INS-IP-703L	14.17	3.96	8.82	3.21	12.51
22244	7-1/2	231331	INS-IP-708R	231340	INS-IP-708L	15.75	4.35	9.22	3.41	13.95
	7-15/16	231332	INS-IP-715R	231341	INS-IP-715L					
	8	231333	INS-IP-800R	231342	INS-IP-800L					
23048	8-1/2	231334	INS-IP-808R	231343	INS-IP-808L	14.17	3.72	8.57	3.13	13.40
	9	231335	INS-IP-900R	231344	INS-IP-900L					
23052	9-1/2	231336	INS-IP-908R	231345	INS-IP-908L	15.75	4.20	9.17	3.42	14.50
23056	10	231337	INS-IP-1000R	231346	INS-IP-1000L	16.54	4.27	9.21	3.46	15.30
	10-1/2	231338	INS-IP-1008R	231347	INS-IP-1008L					

* Inserts for Safety Mount-Type E dimensioned housings only.

Metric shaft sizes available upon request.

ISAF pillow block – inch

2- and 4-bolt

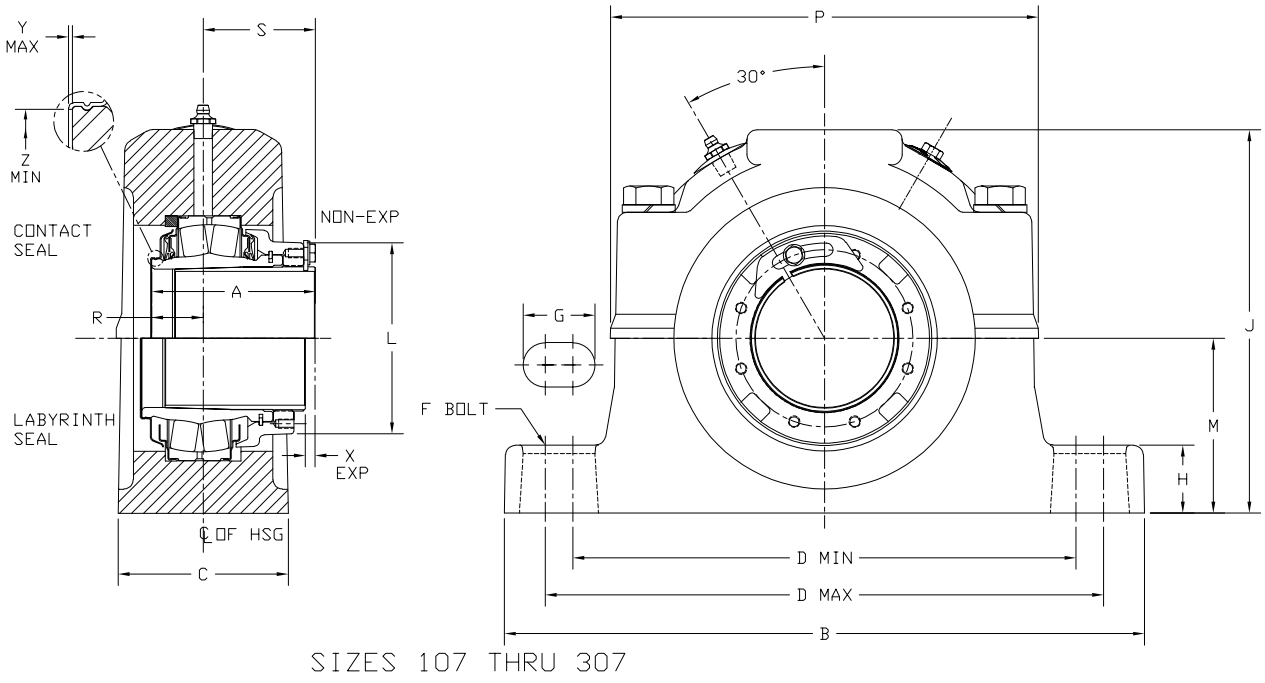

SIZES 107 THRU 307

ISAF pillow block – inch

2- and 4-bolt

SAF series	Shaft size	Trident seal				Labyrinth seal			
		Non-expansion		Expansion		Non-expansion		Expansion	
		Part number	Description	Part number	Description	Part number	Description	Part number	Description
509	1-7/16	070054	P2B509-ISAF-107R	070064	P2B509-ISAF-107RE	070074	P2B509-ISAF-107L	070084	P2B509-ISAF-107LE
510	1-11/16	070055	P2B510-ISAF-111R	070065	P2B510-ISAF-111RE	070075	P2B510-ISAF-111L	070085	P2B510-ISAF-111LE
511	1-15/16	070056	P2B511-ISAF-115R	070066	P2B511-ISAF-115RE	070076	P2B511-ISAF-115L	070086	P2B511-ISAF-115LE
513	2-3/16	070057	P2B513-ISAF-203R	070067	P2B513-ISAF-203RE	070077	P2B513-ISAF-203L	070087	P2B513-ISAF-203LE
515	2-7/16	070951	P2B515-ISAF-207R	070955	P2B515-ISAF-207RE	070959	P2B515-ISAF-207L	070963	P2B515-ISAF-207LE
516	2-11/16	070952	P2B516-ISAF-211R	070956	P2B516-ISAF-211RE	070960	P2B516-ISAF-211L	070964	P2B516-ISAF-211LE
517	2-15/16	070953	P2B517-ISAF-215R	070957	P2B517-ISAF-215RE	070961	P2B517-ISAF-215L	070965	P2B517-ISAF-215LE
520	3-7/16	070954	P2B520-ISAF-307R	070958	P2B520-ISAF-307RE	070962	P2B520-ISAF-307L	070966	P2B520-ISAF-307LE
515	2-7/16	070058	P4B515-ISAF-207R	070068	P4B515-ISAF-207RE	070078	P4B515-ISAF-207L	070088	P4B515-ISAF-207LE
516	2-11/16	070094	P4B516-ISAF-211R	070095	P4B516-ISAF-211RE	070096	P4B516-ISAF-211L	070097	P4B516-ISAF-211LE
517	2-15/16	070059	P4B517-ISAF-215R	070069	P4B517-ISAF-215RE	070079	P4B517-ISAF-215L	070089	P4B517-ISAF-215LE
520	3-7/16	070060	P4B520-ISAF-307R	070070	P4B520-ISAF-307RE	070080	P4B520-ISAF-307L	070090	P4B520-ISAF-307LE

SAF series	Shaft size	A	B	C	D		E	F bolt dia.		G	H	J	L	M	P	S	X exp	Y	Z
					Min.	Max.		2-bolt	4-bolt										
509	1-7/16	2.63	8.25	2.19	6.25	7.00	—	1/2	—	0.94	0.88	4.94	2.72	2.25	5.51	1.53	7/32	0.02	1.80
510	1-11/16	2.81	8.25	2.38	6.50	7.00	—	1/2	—	0.88	1.03	5.45	3.00	2.50	5.81	1.73	7/32	0.02	2.08
511	1-15/16	2.86	9.63	2.75	7.38	8.25	—	5/8	—	1.20	1.03	5.97	3.28	2.75	6.38	1.73	17/64	0.02	2.30
513	2-3/16	3.03	11.00	3.25	8.65	9.50	—	5/8	—	1.15	1.03	6.34	3.50	3.00	6.97	1.88	7/32	0.03	2.59
515	2-7/16	3.42	11.13	3.13	8.63	9.63	1.88	5/8	1/2	1.13	1.25	6.86	3.88	3.25	7.42	2.06	5/16	0.03	2.94
516	2-11/16	3.50	12.59	3.50	9.88	11.00	2.13	3/4	5/8	1.31	1.00	7.50	4.28	3.50	8.31	2.16	15/64	0.03	3.47
517	2-15/16	3.50	12.59	3.50	9.88	11.00	2.13	3/4	5/8	1.31	1.25	7.75	4.28	3.75	8.31	2.16	15/64	0.03	3.47
520	3-7/16	4.16	15.36	4.34	11.81	13.13	2.38	7/8	3/4	1.63	1.66	9.25	5.00	4.50	10.13	2.48	3/8	0.03	4.05

ISAF pillow block – inch

4-bolt

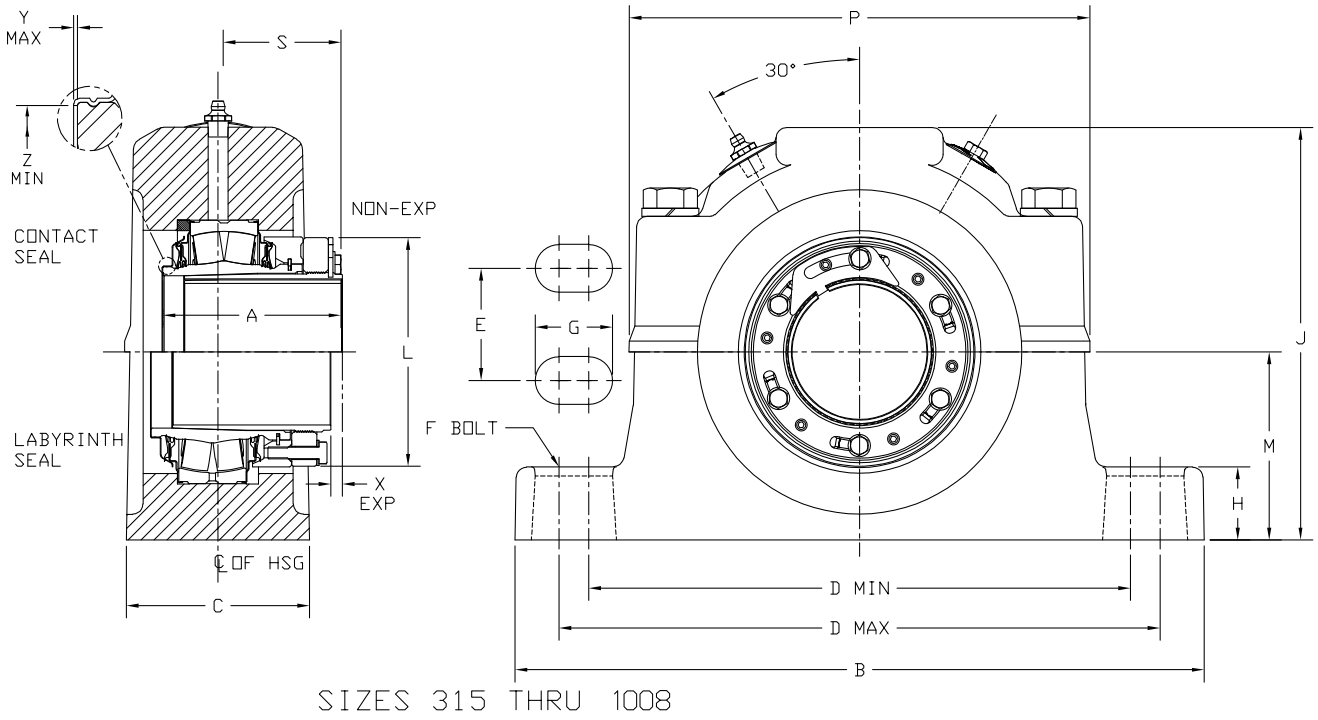

SIZES 315 THRU 1008

ISAF pillow block – inch

4-bolt

SAF series	Shaft size	Trident seal				Labyrinth seal			
		Non-expansion		Expansion		Non-expansion		Expansion	
		Part number	Description	Part number	Description	Part number	Description	Part number	Description
522	3-15/16	070061	P4B522-ISAF-315R	070071	P4B522-ISAF-315RE	070081	P4B522-ISAF-315L	070091	P4B522-ISAF-315LE
526	4-7/16	070062	P4B526-ISAF-407R	070072	P4B526-ISAF-407RE	070082	P4B526-ISAF-407L	070092	P4B526-ISAF-407LE
528	4-15/16	070063	P4B528-ISAF-415R	070073	P4B528-ISAF-415RE	070083	P4B528-ISAF-415L	070093	P4B528-ISAF-415LE
532	5-7/16	037850	P4B532-ISAF-507R	037854	P4B532-ISAF-507RE	037901	P4B532-ISAF-507L	037902	P4B532-ISAF-507LE
	5-1/2	037903	P4B532-ISAF-508R	037904	P4B532-ISAF-508RE	037905	P4B532-ISAF-508L	037906	P4B532-ISAF-508LE
534	5-15/16	037851	P4B534-ISAF-515R	037855	P4B534-ISAF-515RE	037907	P4B534-ISAF-515L	037908	P4B534-ISAF-515LE
	6	037909	P4B534-ISAF-600R	037910	P4B534-ISAF-600RE	037911	P4B534-ISAF-600L	037912	P4B534-ISAF-600LE
536	6-7/16	037852	P4B536-ISAF-607R	037856	P4B536-ISAF-607RE	037913	P4B536-ISAF-607L	037914	P4B536-ISAF-607LE
	6-1/2	037915	P4B536-ISAF-608R	037916	P4B536-ISAF-608RE	037917	P4B536-ISAF-608L	037918	P4B536-ISAF-608LE
538	6-15/16	037853	P4B528-ISAF-615R	037857	P4B528-ISAF-615RE	037919	P4B528-ISAF-615L	037920	P4B528-ISAF-615LE
	7	037921	P4B538-ISAF-700R	037922	P4B538-ISAF-700RE	037923	P4B538-ISAF-700L	037924	P4B538-ISAF-700LE
540	7-3/16	231292	P4B540-ISAF-703R SML	231300	P4B540-ISAF-703RE SML	231308	P4B540-ISAF-703L SML	231316	P4B540-ISAF-703LE SML
544	7-1/2	231293	P4B544-ISAF-708R SML	231301	P4B544-ISAF-708RE SML	231309	P4B544-ISAF-708L SML	231317	P4B544-ISAF-708LE SML
	7-15/16	231324	P4B544-ISAF-715R SML	231325	P4B544-ISAF-715RE SML	231326	P4B544-ISAF-715L SML	231327	P4B544-ISAF-715LE SML
	8	231294	P4B544-ISAF-800R SML	231302	P4B544-ISAF-800RE SML	231310	P4B544-ISAF-800L SML	231318	P4B544-ISAF-800LE SML
048	8-1/2	231295	P4B540-ISAF-808R SML	231303	P4B540-ISAF-808RE SML	231311	P4B540-ISAF-808L SML	231319	P4B540-ISAF-808LE SML
	9	231296	P4B048-ISAF-900R SML	231304	P4B048-ISAF-900RE SML	231312	P4B048-ISAF-900L SML	231320	P4B048-ISAF-900LE SML
052	9-1/2	231297	P4B052-ISAF-908R SML	231305	P4B052-ISAF-908RE SML	231313	P4B052-ISAF-908L SML	231321	P4B052-ISAF-908LE SML
056	10	231298	P4B056-ISAF-1000R SML	231306	P4B056-ISAF-1000RE SML	231314	P4B056-ISAF-1000L SML	231322	P4B056-ISAF-1000LE SML
	10-1/2	231299	P4B056-ISAF-1008R SML	231307	P4B056-ISAF-1008RE SML	231315	P4B056-ISAF-1008L SML	231323	P4B056-ISAF-1008LE SML

SAF series	Shaft size	A	B	C	D		E	F bolt dia.	G	H	J	L	M	P	S	X exp.	Y	Z
					Min.	Max.												
522	3-11/16 3-15/16 4	4.70	16.50	4.75	12.59	14.50	2.75	3/4	1.83	1.78	10.19	5.56	4.94	10.71	2.86	3/8	0.03	4.50
526	4-3/16 4-7/16 4-1/2	5.23	18.38	5.13	14.50	16.00	3.25	7/8	1.75	2.06	11.65	6.44	6.00	12.47	3.09	3/8	0.04	5.00
528	4-15/16 5	5.98	19.70	5.88	15.63	17.38	3.38	1	2.00	2.06	12.41	7.63	6.00	13.38	3.68	3/8	0.04	5.84
532	5-7/16 5-1/2	6.17	21.65	6.25	17.38	19.25	3.75	1	2.06	2.34	12.50	8.75	6.69	13.38	3.64	3/8	0.04	5.92
534	5-15/16 6	7.08	24.75	6.75	19.38	21.63	4.25	1	2.25	2.88	13.68	10.25	7.06	15.09	4.11	3/8	0.04	7.01
536	6-7/16 6-1/2	7.39	26.75	7.13	20.88	23.63	4.63	1	2.50	3.00	15.13	11.41	7.50	17.38	4.34	3/8	0.04	7.89
538	6-15/16 7	7.39	28.00	7.50	21.63	24.38	4.50	1-1/4	2.75	3.13	15.50	11.41	7.88	13.38	4.34	3/8	0.04	7.89
540	7-3/16	8.82	28.75	8.00	22.50	25.00	5.00	1-1/4	2.64	3.38	16.63	12.51	8.25	18.55	5.36	3/8	0.05	8.60
544	7-1/2 7-15/16 8	9.22	32.75	8.87	24.75	27.88	5.25	1-1/2	3.20	3.75	18.88	13.95	9.50	20.68	5.57	3/8	0.05	9.48
048	8-1/2 9	8.57	28.75	8.00	22.50	25.00	5.00	1-1/4	2.64	3.38	16.63	13.40	8.25	18.55	5.38	5/8	0.05	9.93
052	9-1/2	9.17	32.75	8.87	24.75	27.88	5.25	1-1/2	3.20	3.75	18.88	14.50	9.50	20.68	5.70	17/32	0.05	10.79
056	10 10-1/2	9.21	32.24	8.87	26.25	29.50	5.50	1-1/2	3.26	3.94	20.19	15.30	9.88	21.55	5.69	1-5/8	0.05	11.63

ISN plummer block – metric

2- and 4-bolt

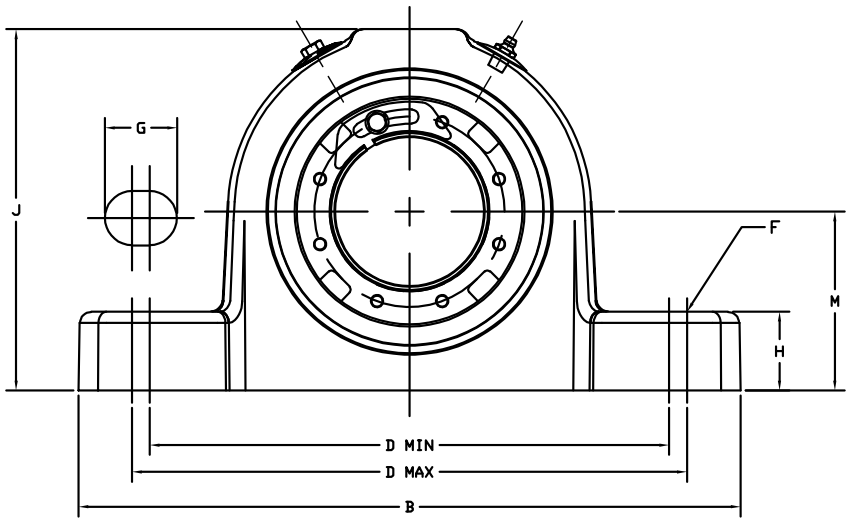

SIZES 30MM THRU 140MM

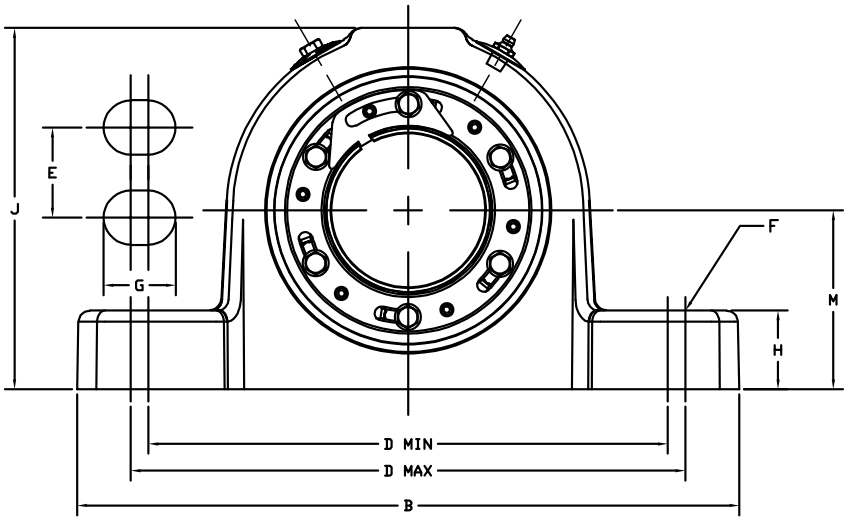

SIZES 150MM THRU 170MM

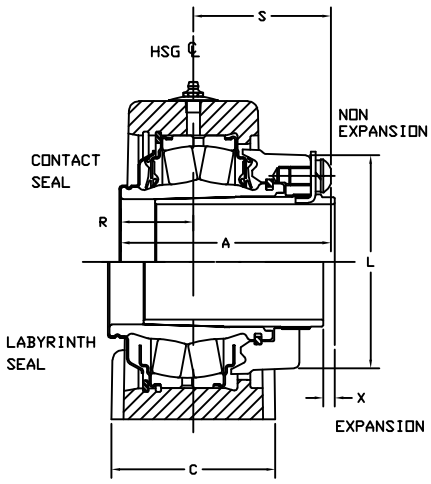

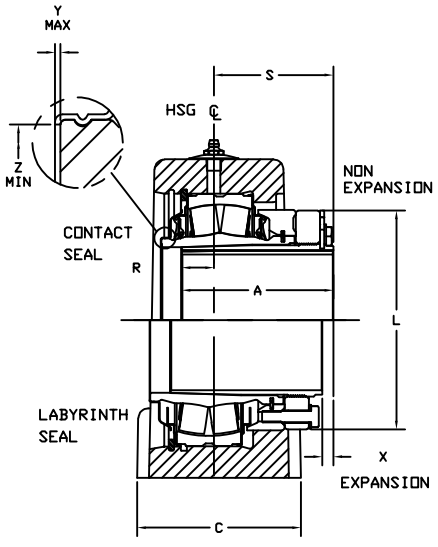

ISN plummer block – metric

2- and 4-bolt

Shaft size	Trident seal				Labyrinth seal			
	Non-expansion		Expansion		Non-expansion		Expansion	
	Part number	Description	Part number	Description	Part number	Description	Part number	Description
30	071000M	P2B507-ISN-030MFR	071017M	P28507-ISN-030MLR	071034M	P28507-ISN-030MFS	071051M	P28507-ISN-030MLS
35	071001M	P2B508-ISN-035MFR	071018M	P2B508-ISN-035MLR	071035M	P2B508-ISN-035MFS	071052M	P2B508-ISN-035MLS
40	071002M	P2B509-ISN-040MFR	071019M	P2B509-ISN-040MLR	071036M	P2N509-ISN-040MFS	071053M	P2B509-ISN-040MLS
45	071003M	P2B510-ISN-045MFR	071020M	P2B510-ISN-045MLR	071037M	P2B510-ISN-045MFS	071054M	P2B510-ISN-045MLS
50	071004M	P2B511-ISN-050MFR	071021M	P2B511-ISN-050MLR	071038M	P2B511-ISN-050MFS	071055M	P2B511-ISN-050MLS
55	071005M	P2B512-ISN-055MFR	071022M	P2B512-ISN-055MLR	071039M	P2B512-ISN-055MFS	071056M	P2B512-ISN-055MLS
60	071006M	P2B513-ISN-060MFR	071023M	P28513-ISN-060MLR	071040M	P2B513-ISN-060MFS	071057M	P28513-ISN-060MLS
65	071007M	P2B515-ISN-065MFR	071024M	P2B515-ISN-065MLR	071041M	P2B515-ISN-065MFS	071058M	P2B515-ISN-065MLS
70	071008M	P2B516-ISN-070MFR	071025M	P2B516-ISN-070MLR	071042M	P2B516-ISN-070MFS	071059M	P2B516-ISN-070MLS
75	071009M	P2B517-ISN-075MFR	071026M	P2B517-ISN-075MLR	071043M	P2B517-ISN-075MFS	071060M	P2B517-ISN-075MLS
80	071010M	P2B518-ISN-080MFR	071027M	P2B518-ISN-080MLR	071044M	P2B518-ISN-080MFS	071061M	P2B518-ISN-080MLS
85	071011M	P2B519-ISN-085MFR	071028M	P2B519-ISN-085MLR	071045M	P2B519-ISN-085MFS	071062M	P2B519-ISN-085MLS
90	071012M	P2B520-ISN-090MFR	071029M	P2B520-ISN-090MLR	071046M	P2B520-ISN-090MFS	071063M	P2B520-ISN-090MLS
100	071013M	P2B522-ISN-100MFR	071030M	P2B522-ISN-100MLR	071047M	P2B522-ISN-100MFS	071064M	P2B522-ISN-100MLS
110	071014M	P2B524-ISN-110MFR	071031M	P2B524-ISN-110MLR	071048M	P2B524-ISN-110MFS	071065M	P2B524-ISN-110MLS
115	071015M	P2B526-ISN-115MFR	071032M	P2B526-ISN-115MLR	071049M	P2B526-ISN-115MFS	071066M	P2B526-ISN-115MLS
125	071016M	P2B528-ISN-125MFR	071033M	P2B528-ISN-125MLR	071050M	P2B528-ISN-125MFS	071067M	P2B528-ISN-125MLS
135	071102M	P2B530-ISN-135MFR	071103M	P28530-ISN-135MLR	071104M	P28530-ISN-135MFS	071105M	P28530-ISN-135MLS
140	071106M	P2B532-ISN-140MFR	071107M	P2B532-ISN-140MLR	071108M	P2B532-ISN-140MFS	071109M	P2B532-ISN-140MLS
150	078822	P4B3134-ISN-150MFR	078823	P4B3134-ISN-150MLR				
160	078824	P4B3136-ISN-160MFR	078825	P4B3136-ISN-160MLR				
170	078826	P4B3138-ISN-170MFR	078827	P4B3138-ISN-170MLR				

Shaft size	A	B	C	D		E	F bolt dia.	G	H	J	L	M	R	S	X exp.	Y	Z
				Min.	Max.												
30	66.7	184.9	52.0	145.0	155.0	—	M12	20.0	22.0	100.9	67.6	50.0	22.6	44.1	4.0	0.51	45.7
35	66.7	205.9	60.2	150.0	174.6	—	M12	27.3	25.0	110.8	67.6	60.0	22.6	44.1	4.0		
40	71.4	206.3	60.2	155.0	174.6	—	M12	24.8	25.0	114.0	74.7	60.0	20.6	50.8	6.5	0.51	52.8
45	72.6	204.9	60.2	160.0	175.0	—	M12	22.5	25.0	113.8	81.0	60.0	21.8	50.8	6.5	0.51	58.4
50	72.6	253.9	70.2	190.0	215.9	—	M16	31.0	28.0	124.5	81.0	70.0	21.8	50.8	6.5		
55	77.0	253.9	69.9	190.0	216.0	—	M16	31.0	30.0	130.3	87.1	70.0	23.0	54.0	6.5	0.64	66.0
60	86.9	274.9	80.2	205.0	235.0	—	M16	33.0	30.0	152.4	96.5	80.0	30.6	56.3	7.0	0.64	74.7
65	88.9	280.1	80.1	215.0	236.0	—	M16	28.5	30.0	156.0	106.7	80.0	31.4	57.5	7.0	0.64	88.1
70	88.9	315.9	90.2	244.5	268.3	—	M20	34.1	32.0	176.0	106.7	95.0	31.4	57.5	7.0	0.64	88.1
75																	
80	106.0	345.3	100.3	270.0	293.7	—	M20	34.0	35.0	196.7	124.7	100.0	37.7	68.3	7.0	0.64	102.9
85	106.0	345.0	100.2	264.2	296.1	—	M20	37.9	35.0	205.2	124.7	112.0	37.7	68.3	7.0		
90	119.5	379.8	110.2	292.8	327.0	—	M24	43.1	40.0	218.3	138.7	112.0	41.7	77.8	8.0	0.64	114.3
100	119.5	410.0	120.0	314.4	356.0	—	M24	46.8	45.0	239.0	138.7	125.0	41.7	77.8	8.0		
110	133.0	410.0	120.0	314.5	356.0	—	M24	46.8	45.0	260.7	161.3	140.0	44.5	88.5	10.0	0.91	127.0
115	152.0	444.8	130.0	359.6	387.0	—	M24	41.7	50.0	292.8	191.8	150.0	48.4	103.6	10.0	0.91	148.3
125	152.0	500.0	150.2	400.0	427.0	—	M30	48.5	50.0	290.4	191.8	150.0	48.4	103.6	10.0		
135	156.8	539.8	159.8	443.0	457.0	—	M30	42.0	60.0	312.5	222.2	160.0	51.8	105.0	16.3	0.91	150.4
140	179.8	560.0	160.0	463.0	477.0	—	M30	42.0	60.0	345.3	260.4	170.0	62.4	117.4	16.8	0.91	178.3
150	179.8	510.0	180.0	424.0	436.0	100.0	M24	34.0	70.0	344.0	260.4	170.0	62.1	117.7	16.8	0.91	178.1
160	191.8	530.0	190.0	444.0	456.0	110.0	M24	34.0	75.0	366.0	289.3	180.0	65.0	126.8	17.0	0.91	200.4
170	191.8	560.0	210.0	474.0	486.0	120.0	M24	34.0	80.0	385.0	289.3	190.0	65.0	126.8	17.0	0.91	200.4

ISN bearing insert – metric

Contact Seal

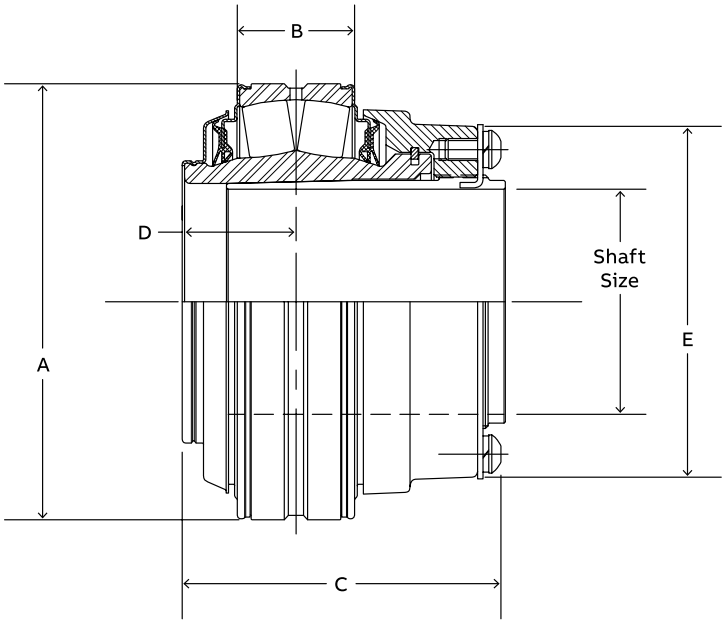

Labyrinth Seal

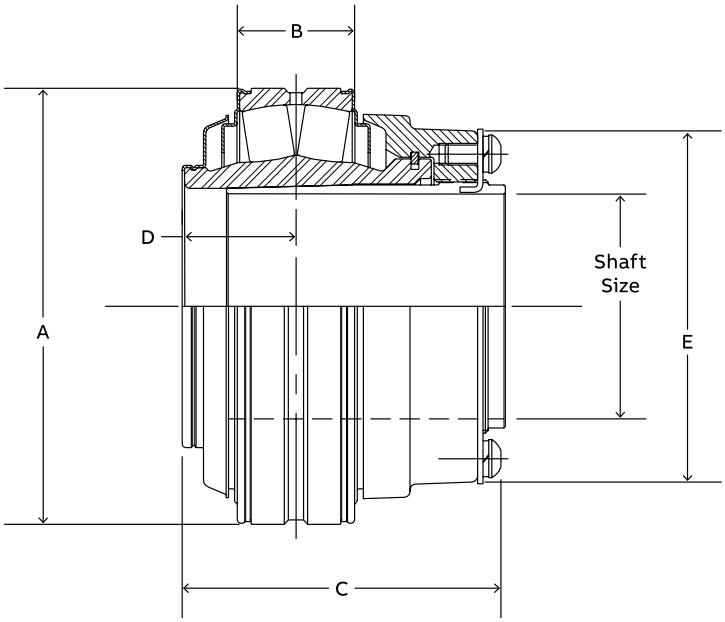

ISN bearing insert – metric

Shaft size	Contact seal		Labyrinth seal		Dimensions (mm)				
	Part number	Description	Part number	Description	A	B	C	D	E
30	071068M	INS-ISN-30MR	071085M	INS-ISN-30MS	80.0	24.0	66.7	24.6	67.6
35	071069M	INS-ISN-35MR	071086M	INS-ISN-35MS					
40	071070M	INS-ISN-40MR	071087M	INS-ISN-40MS	85.0	24.0	71.4	24.2	74.7
45	071071M	INS-ISN-45MR	071088M	INS-ISN-45MS	90.0	24.0	72.6	24.8	81.0
50	071072M	INS-ISN-50MR	071089M	INS-ISN-50MS					
55	071073M	INS-ISN-55MR	071090M	INS-ISN-55MS	100.0	26.3	77.0	26.7	87.1
60	071074M	INS-ISN-60MR	071091M	INS-ISN-60MS	120.0	32.3	86.9	30.7	96.5
65	071075M	INS-ISN-65MR	071092M	INS-ISN-65MS	130.0	32.3	88.9	31.0	106.7
70	071076M	INS-ISN-70MR	071093M	INS-ISN-70MS					
75	071077M	INS-ISN-75MR	071094M	INS-ISN-75MS					
80	071078M	INS-ISN-80MR	071095M	INS-ISN-80MS	160.0	41.3	106.3	37.7	124.7
85	071079M	INS-ISN-85MR	071096M	INS-ISN-85MS					
90	071080M	INS-ISN-90MR	071097M	INS-ISN-90MS	180.0	47.3	120.0	41.8	138.7
100	071081M	INS-ISN-100MR	071098M	INS-ISN-100MS					
110	071082M	INS-ISN-110MR	071099M	INS-ISN-110MS	200.0	54.8	133.0	49.1	161.3
115	071083M	INS-ISN-115MR	071100M	INS-ISN-115MS	230.0	65.8	152.0	53.5	191.8
125	071084M	INS-ISN-125MR	071101M	INS-ISN-125MS					
135	071116M	INS-ISN-135MR	071117M	INS-ISN-135MS	250.0	69.9	156.8	59.4	222.2
140	071118M	INS-ISN-140MR	071119M	INS-ISN-140MS	290.0	81.8	179.8	70.3	260.4
150	079991M	INS-ISN-150MR	—	—					
160	079992M	INS-ISN-160MR	—	—	320.0	88.1	187.7	72.7	289.7
170	079993M	INS-ISN-170MR	—	—					

Accessories

Spanner wrench

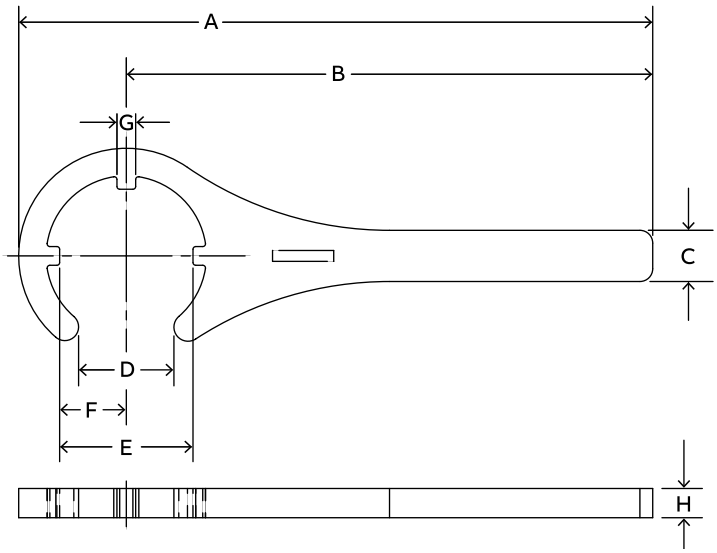

Size 102-308 – in (mm)

Shaft size	Part number	A	B	C	D	E	F	G	H
1-1/8—1-1/2 (30—35)	066629	10.84 (275.3)	9.00 (228.6)	0.88 (22.4)	1.63 (41.4)	2.28 (57.9)	1.14 (29.0)	0.32 (8.1)	0.50 (12.7)
1-5/8—1-3/4 (40)	066630	11.04 (280.4)	9.00 (228.6)	0.88 (22.4)	1.88 (47.8)	2.48 (63.0)	1.24 (31.5)	0.32 (8.1)	0.50 (12.7)
1-7/8—2 (45—50)	066631	11.20 (284.5)	9.00 (228.6)	0.88 (22.4)	2.13 (54.1)	2.72 (69.2)	1.36 (34.5)	0.32 (8.1)	0.50 (12.7)
2-3/16—2-1/4 (55)	066632	12.38 (314.5)	10.00 (254.0)	0.88 (22.4)	2.38 (60.5)	2.98 (75.7)	1.49 (37.8)	0.44 (11.2)	0.50 (12.7)
2-3/8—2-1/2 (60)	066633	12.63 (320.8)	10.00 (254.0)	1.31 (33.3)	2.63 (66.8)	3.40 (86.4)	1.70 (43.2)	0.44 (11.2)	0.50 (12.7)
2-11/16—3 (60,70,75)	066634	16.90 (429.3)	14.00 (355.6)	1.31 (33.3)	3.13 (79.5)	3.80 (96.5)	1.90 (48.3)	0.44 (11.2)	0.50 (12.7)
3-3/16—3-1/2 (80—85)	066635	17.39 (441.7)	14.00 (355.6)	1.31 (33.3)	3.63 (92.2)	4.36 (110.7)	2.18 (55.4)	0.44 (11.2)	0.50 (12.7)

Lock plate kit

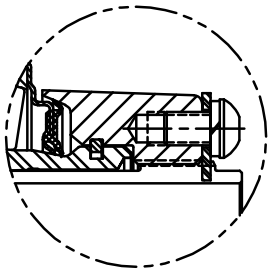

SIZES 102—308 (30—85)

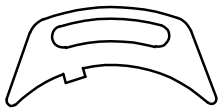

Lock plate kit consists of:

1 Lock plate
1 Button head cap screw
1 lock washer

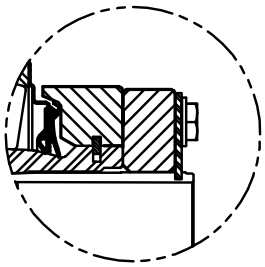

SIZES 311—700 (90—170)

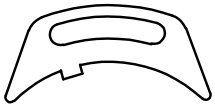

Lock plate

1 Lock plate

Size 102-308

Bearing series	Shaft size (in)	Shaft size (mm)	Lock plate kit part number
22208	1-1/8 1-3/16 1-1/4 1-3/8 1-7/16 1-1/2	30 35	048925
22209	1-5/8 1-11/16 1-3/4	40	048926
22210	1-7/8 1-15/16 2	45 50	048927
22211	2-3/16 2-1/4	55	048928
22213	2-3/8 2-7/16 2-1/2	60	048929
22215	2-11/16 2-3/4 2-15/16 3	65 70 75	048930
22218	3-3/16 3-1/4 3-7/16 3-1/2	80 85	048931

Note: Only for use on standard Safety Mount IP/ISAF/ISN bearings in sizes shown.

Size 311-700

Bearing series	Shaft size (in)	Shaft size (mm)	Lock plate kit part number
22220	3-11/16 3-15/16 4	90 100	048404
22222	4-4/16 4-1/2	110	048411
22226	4-15/16 5	115 125	079116
22228	5-7/16 5-1/2	135	079117
22232	5-15/16 6	140 150	079118
22236	6-7/16 6-1/2 6-15/16 7	160 170	079119

Note: Only for use on Safety Mount IP/ISAF/ISN bearings in sizes shown.

IP/ISAF end covers – inch

Steel, open



Shaft size	Front end				Backside			
	Safety Mount		Safety Mount, E-dimensioned		Safety Mount		Safety Mount, E-dimensioned	
	Part number	Description	Part number	Description	Part number	Description	Part number	Description
1-1/8	070160	IPECO-08-102	070160	IPECO-08-102	072500	S2IPBECO-08-102	072500	S2IPBECO-08-102
1-3/16	070161	IPECO-08-103	070161	IPECO-08-103	072501	S2IPBECO-08-103	072501	S2IPBECO-08-103
1-1/4	070162	IPECO-08-104	070162	IPECO-08-104	072502	S2IPBECO-08-104	072502	S2IPBECO-08-104
1-3/8	070163	IPECO-08-106	070163	IPECO-08-106	072503	S2IPBECO-08-106	072503	S2IPBECO-08-106
1-7/16	070164	IPECO-08-107	070164	IPECO-08-107	072504	S2IPBECO-08-107	072504	S2IPBECO-08-107
1-1/2	070165	IPECO-08-108	070166	IPECO-09-108	072505	S2IPBECO-08-108	072506	S2IPBECO-09-108
1-5/8	070167	IPECO-09-110	070167	IPECO-09-110	072507	S2IPBECO-09-110	072507	S2IPBECO-09-110
1-11/16	070168	IPECO-09-111	070168	IPECO-09-111	072508	S2IPBECO-09-111	072508	S2IPBECO-09-111
1-3/4	070169	IPECO-09-112	070170	IPECO-10-112	072509	S2IPBECO-09-112	072510	S2IPBECO-10-112
1-7/8	070171	IPECO-10-114	070171	IPECO-10-114	072511	S2IPBECO-10-114	072511	S2IPBECO-10-114
1-15/16	070172	IPECO-10-115	070172	IPECO-10-115	072512	S2IPBECO-10-115	072512	S2IPBECO-10-115
2	070173	IPECO-10-200	070173	IPECO-10-200	072513	S2IPBECO-10-200	072513	S2IPBECO-10-200
2-3/16	070174	IPECO-11-203	070174	IPECO-11-203	072514	S2IPBECO-11-203	072514	S2IPBECO-11-203
2-1/4	070175	IPECO-11-204	070176	S2IPECO-13-204	072515	S2IPBECO-11-204	072516	S2IPBECO-13-204
2-3/8	070177	S2IPECO-13-206	070177	S2IPECO-13-206	072517	S2IPBECO-13-206	072517	S2IPBECO-13-206
2-7/16	070178	S2IPECO-13-207	070178	S2IPECO-13-207	072518	S2IPBECO-13-207	072518	S2IPBECO-13-207
2-1/2	070179	S2IPECO-13-208	070179	S2IPECO-13-208	072519	S2IPBECO-13-208	072519	S2IPBECO-13-208
2-11/16	070180	IPECO-15-211	070180	IPECO-15-211	072520	S2IPBECO-15-211	072520	S2IPBECO-15-211
2-3/4	070181	IPECO-15-212	070181	IPECO-15-212	072521	S2IPBECO-15-212	072521	S2IPBECO-15-212
2-15/16	070182	IPECO-15-215	070182	IPECO-15-215	072522	S2IPBECO-15-215	072522	S2IPBECO-15-215
3	070183	IPECO-15-300	070183	IPECO-15-300	072523	S2IPBECO-15-300	072523	S2IPBECO-15-300
3-3/16	070184	S2IPECO-18-303	070184	S2IPECO-18-303	072524	S2IPBECO-18-303	072524	S2IPBECO-18-303
3-1/4	070185	S2IPECO-18-304	070185	S2IPECO-18-304	072525	S2IPBECO-18-304	072525	S2IPBECO-18-304
3-7/16	070186	S2IPECO-18-307	070186	S2IPECO-18-307	072526	S2IPBECO-18-307	072526	S2IPBECO-18-307
3-1/2	070187	S2IPECO-18-308	070187	S2IPECO-18-308	072527	S2IPBECO-18-308	072527	S2IPBECO-18-308
3-11/16	070188	S2IPECO-20-311	070188	S2IPECO-20-311	072528	S2IPBECO-20-311	072528	S2IPBECO-20-311
3-15/16	070189	S2IPECO-20-315	070189	S2IPECO-20-315	072529	S2IPBECO-20-315	072529	S2IPBECO-20-315
4	070190	S2IPECO-20-400	070190	S2IPECO-20-400	072530	S2IPBECO-20-400	072530	S2IPBECO-20-400
4-7/16	070191	S2IPECO-22-407	070191	S2IPECO-22-407	072531	IPBECO-22-407	072531	IPBECO-22-407
4-1/2	070192	S2IPECO-22-408	070192	S2IPECO-22-408	072533	IPBECO-22-408	072533	IPBECO-22-408
4-15/16	070193	S2IPECO-26-415	070193	S2IPECO-26-415	072534	IPBECO-26-415	072534	IPBECO-26-415
5	070194	S2IPECO-26-500	070194	S2IPECO-26-500	072536	IPBECO-26-500	072536	IPBECO-26-500
5-7/16	069933	IPECO-28-507	069933	IPECO-28-507	069933	IPECO-28-507	—	—
5-1/2	069934	IPECO-28-508	069934	IPECO-28-508	069934	IPECO-28-508	—	—
5-15/16	069935	IPECO-32-515	069935	IPECO-32-515	069935	IPECO-32-515	—	—
6	069936	IPECO-32-600	069936	IPECO-32-600	069936	IPECO-32-600	—	—
6-7/16	069937	IPECO-36-607	069937	IPECO-36-607	069937	IPECO-36-607	—	—
6-1/2	069938	IPECO-36-608	069938	IPECO-36-608	069938	IPECO-36-608	—	—
6-15/16	069939	IPECO-36-615	069939	IPECO-36-615	069939	IPECO-36-615	—	—
7	069940	IPECO-36-700	069940	IPECO-36-700	069940	IPECO-36-700	—	—

Note: ISAF product will use the same front end covers on the sides of the housing

IP/ISAF end covers – inch

Steel, closed



Shaft size	Safety Mount		Safety Mount, E-dimensioned	
	Part number	Description	Part number	Description
1-1/8 to 1-7/16	069960	IPEC08	069960	IPEC08
1-1/2	069960	IPEC08	069961	IPEC09
1-5/8 to 1-11/16	069961	IPEC09	069961	IPEC09
1-3/4	069961	IPEC09	069962	IPEC10
1-7/8 to 2	069962	IPEC10	069962	IPEC10
2-3/16	069963	IPEC11	069963	IPEC11
2-1/4	069963	IPEC11	069964	IPEC13
2-3/8 to 2-1/2	069964	IPEC13	069964	IPEC13
2-11/16 to 3	069965	IPEC15	069965	IPEC15
3-3/16 to 3-1/2	069966	IPEC18	069966	IPEC18
3-11/16 to 4	069967	S2IPEC20	069967	S2IPEC20
4-7/16 to 4-1/2	069968	S2IPEC22	069968	S2IPEC22
4-15/16 to 5	069969	S2IPEC26	069969	S2IPEC26
5-7/16 to 5-1/2	069983	IPEC28	069983	IPEC28
5-15/16 to 6	069984	IPEC32	069984	IPEC32
6-7/16 to 7	069985	IPEC36	069985	IPEC36
7-3/16	231410	END COVER KIT 540/048 SMLG	—	—
7-1/2 to 8	231411	END COVER KIT 544/052 SMLG	—	—
8-1/2 to 9	231410	END COVER KIT 540/048 SMLG	—	—
9-1/2	231411	END COVER KIT 544/052 SMLG	—	—
10 to 10-1/2	231412	END COVER KIT 056 SMLG	—	—

IP/ISAF end covers – inch

Steel, open/closed

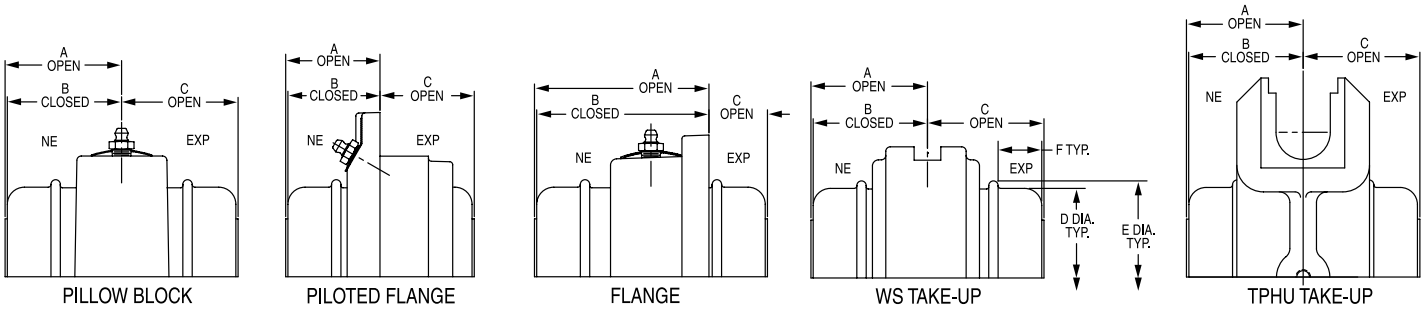

	Shaft size	IP pillow block (2-bolt)	IP pillow block (4-bolt)	IP piloted flange	IP round flange	IP square flange	Wide-slot take-up
A Open		1.88		1.67	3.12	3.45	2.06
B Closed	1-1/8—1-1/2	1.82	—	1.61	3.06	3.39	2.00
C Open		1.92		2.46	0.99	0.99	2.10
A Open		2.06		1.83	3.33	4.07	2.19
B Closed	1-5/8—1-3/4	1.98	—	1.77	3.27	4.01	2.13
C Open		2.04		2.60	1.10	1.10	2.25
A Open		2.75		1.92	3.47	3.95	2.25
B Closed	1-7/8—2	2.69	—	1.86	3.41	3.89	2.19
C Open		2.89		2.83	1.28	1.28	2.45
A Open		2.31		2.00	3.69	4.53	2.42
B Closed	2-3/16—2-1/4	2.25	—	1.94	3.63	4.47	2.36
C Open		2.38		3.00	1.32	1.32	2.54
A Open		3.14	3.14	2.18	4.04	4.72	2.53
B Closed	2-3/8—2-1/2	3.07	3.07	2.09	3.95	4.63	2.44
C Open		3.40	3.40	3.24	1.37	1.37	2.77
A Open		2.70	2.70	2.29	4.18	5.06	2.70
B Closed	2-11/16—3	2.61	2.61	2.20	4.09	4.97	2.61
C Open		3.11	3.11	3.54	1.66	1.66	3.06
A Open		3.05	3.05	2.91		5.78	3.07
B Closed	3-3/16—3-1/2	2.92	2.92	2.78	—	5.65	2.94
C Open		3.29	3.29	3.59		1.63	3.31
A Open			3.76	3.32		7.17	3.52
B Closed	3-11/16—4	—	3.63	3.19	—	7.04	3.39
C Open			3.76	4.13		1.94	3.80
A Open			3.93	4.02			
B Closed	4-7/16—4-1/2	—	3.80	3.89	—	—	—
C Open			4.25	4.16			
A Open			5.07	4.24			
B Closed	4-15/16—5	—	4.94	4.11	—	—	—
C Open			5.30	4.91			

IP/ISAF end covers – inch

Steel, open/closed

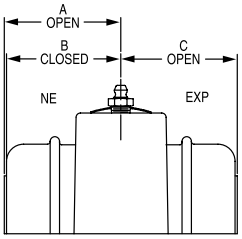

PILLOW BLOCK

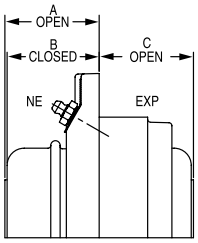

PILOTED FLANGE

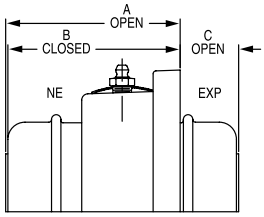

FLANGE

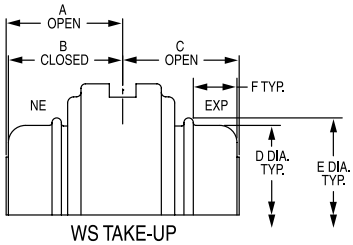

WS TAKE-UP

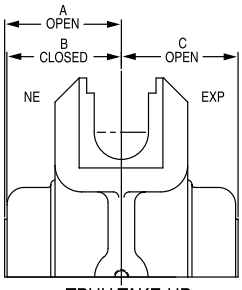

TPHU TAKE-UP

	Shaft size	E-IP pillow block (2-bolt)	E-IP pillow block (4-bolt)	E-IP piloted flange	E-IP square flange	D	E	F
A Open		1.88		1.67	3.45			
B Closed	1-3/8—1-7/16	1.82	—	1.61	3.39	2.94	3.19	3/4
C Open		1.92		2.46	1.20			
A Open		2.06		1.83	4.07			
B Closed	1-1/2—1-11/16	1.98	—	1.77	4.01	3.27	3.39	7/8
C Open		2.04		2.60	1.20			
A Open		2.75		1.92	3.95			
B Closed	1-3/4—2	2.69	—	1.86	3.89	3.52	3.61	1-1/64
C Open		2.89		2.83	1.38			
A Open		2.31		2.00	4.53			
B Closed	2-3/16	2.25	—	1.94	4.47	3.77	3.95	1-1/32
C Open		2.38		3.00	1.43			
A Open		3.14	3.14	2.18	4.72			
B Closed	2-1/4—2-1/2	3.07	3.07	2.09	4.63	4.41	4.64	1
C Open		3.40	3.40	3.24	1.69			
A Open		2.70	2.70	2.29	5.06			
B Closed	2-11/16—3	2.61	2.61	2.20	4.97	4.92	5.06	1-7/32
C Open		3.11	3.11	3.54	1.62			
A Open		3.05	3.05	2.91	5.78			
B Closed	3-3/16—3-1/2	2.92	2.92	2.78	5.65	5.98	6.22	1-1/8
C Open		3.29	3.29	3.59	1.38			
A Open			3.76	3.31	7.17			
B Closed	3-15/16—4	—	3.63	3.19	7.04	6.67	6.91	1-3/8
C Open			3.76	4.13	2.06			
A Open			3.93	3.85	7.62			
B Closed	4-7/16—4-1/2	—	3.80	3.72	7.49	7.31	7.56	1-43/64
C Open			4.25	4.68	4.23			
A Open			5.07	4.08				
B Closed	4-15/16—5	—	4.94	3.95	—	8.44	8.69	1-29/32
C Open			5.30	5.37				

	Shaft size	ISAF pillow block (2-bolt)	ISAF pillow block (4-bolt)
A Open		2.06	
B Closed	1-7/16	2.00	—
C Open		2.07	
A Open		2.18	
B Closed	1-11/16	2.12	—
C Open		2.16	
A Open		3.00	
B Closed	1-15/16	2.94	—
C Open		3.02	
A Open		2.44	
B Closed	2-3/16	2.38	—
C Open		2.42	
A Open		3.33	3.33
B Closed	2-7/16	3.24	3.24
C Open		3.28	3.28
A Open		2.92	2.92
B Closed	2-11/16	2.85	2.85
C Open		3.05	3.05
A Open		2.94	2.94
B Closed	2-15/16	2.85	2.85
C Open		3.09	3.09
A Open		3.27	3.27
B Closed	3-7/16	3.14	3.14
C Open		3.22	3.22
A Open			3.67
B Closed	3-15/16	—	3.54
C Open			3.65
A Open			4.02
B Closed	4-7/16	—	3.89
C Open			3.99
A Open			5.09
B Closed	4-15/16	—	4.96
C Open			5.03
A Open			5.08
B Closed	5-7/16	—	4.95
C Open			5.02
A Open			5.75
B Closed	5-15/16	—	5.62
C Open			5.69
A Open			5.76
B Closed	6-7/16—6-15/16	—	5.63
C Open			5.70

ISN end cover – metric

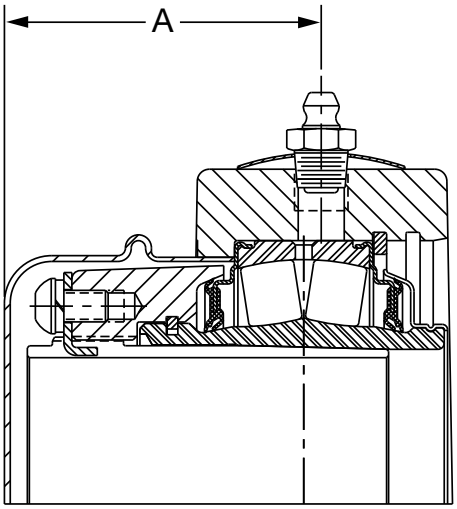

PILLOW BLOCK

Housing series	Shaft size (mm)	Front side closed cover		Front side open cover		Back side open cover		A Dimensions (mm)
		Part number	Description	Part number	Description	Part number	Description	
507	30	069960	IPEC08	070251	IPECO-08-30mm	070620	IPBECO-08-30mm	49.5
508	35	069960	IPEC08	070252	IPECO-08-35mm	070621	IPBECO-08-35mm	49.5
509	40	069961	IPEC09	070253	IPECO-09-40mm	070622	IPBECO-09-40mm	55.0
510	45	069962	IPEC10	070254	IPECO-10-45mm	070623	IPBECO-10-45mm	58.3
511	50	069962	IPEC10	070255	IPECO-10-50mm	070624	IPBECO-10-50mm	58.3
512	55	069963	IPEC11	070256	IPECO-11-55mm	070625	IPBECO-11-55mm	61.7
513	60	069964	IPEC13	070257	IPECO-13-60mm	070626	IPBECO-13-60mm	66.3
515	65	069965	IPEC15	070258	IPECO-15-65mm	070627	IPBECO-15-65mm	70.0
516	70	069965	IPEC15	070259	IPECO-15-70mm	070628	IPBECO-15-70mm	70.0
517	75	069965	IPEC15	070260	IPECO-15-75mm	070629	IPBECO-15-75mm	70.0
518	80	069966	S2IPEC18	070261	IPECO-18-80mm	070630	IPBECO-18-80mm	78.3
519	85	069966	S2IPEC18	070262	IPECO-18-85mm	070631	IPBECO-18-85mm	78.3
520	90	069967	S2IPEC20	070263	IPECO-20-90mm	070632	IPBECO-20-90mm	91.2
522	100	069967	S2IPEC20	070264	IPECO-20-100mm	070633	IPBECO-20-100mm	91.2
524	110	069968	S2IPEC22	070265	IPECO-22-110mm	070634	IPBECO-22-110mm	97.7
526	115	069969	S2IPEC26	070266	IPECO-29-115mm	070635	IPBECO-29-115mm	111.4
528	125	069969	S2IPEC26	070267	IPECO-26-125mm	070636	IPBECO-26-125mm	111.4
530	135	069983	IPEC28	—	—	—	—	125.2
532	140	069984	IPEC30	—	—	—	—	143.2

Notes

S-2000 (spherical)

B23-1	**S-2000 (spherical)**
B23-2	**Features and benefits**
B23-5	**Specification**
B23-5	**How to order**
B23-6	**Nomenclature**
B23-7	**Selection**
B23-14	**Dimensions**
B23-14	Pillow block
B23-18	Pillow block, E-dimensioned
B23-22	Pillow block, steel
B23-26	Pillow block, E-dimensioned steel
B23-30	Round flange
B23-32	Square flange
B23-34	Square flange, E-dimensioned
B23-36	Square flange, steel
B23-38	Piloted flange
B23-40	Piloted flange, E-dimensioned
B23-42	Wide-slot take-up
B23-46	Top-angle heavy-duty universal take-up
B23-48	Insert
B23-50	**Accessories**

Features and benefits

S-2000

Overview

Designed for easy installation using set screw mounting, S-2000 mounted spherical roller bearings are the premier, high-performance solution to maximize your application output. The bearings are available in standard and type E dimensions for drop-in replacement with most brands on the market and can be installed quickly to maximize uptime. A variety of housing styles and sealing options are available for S-2000 bearings, making them ideal for material- and air-handling applications.

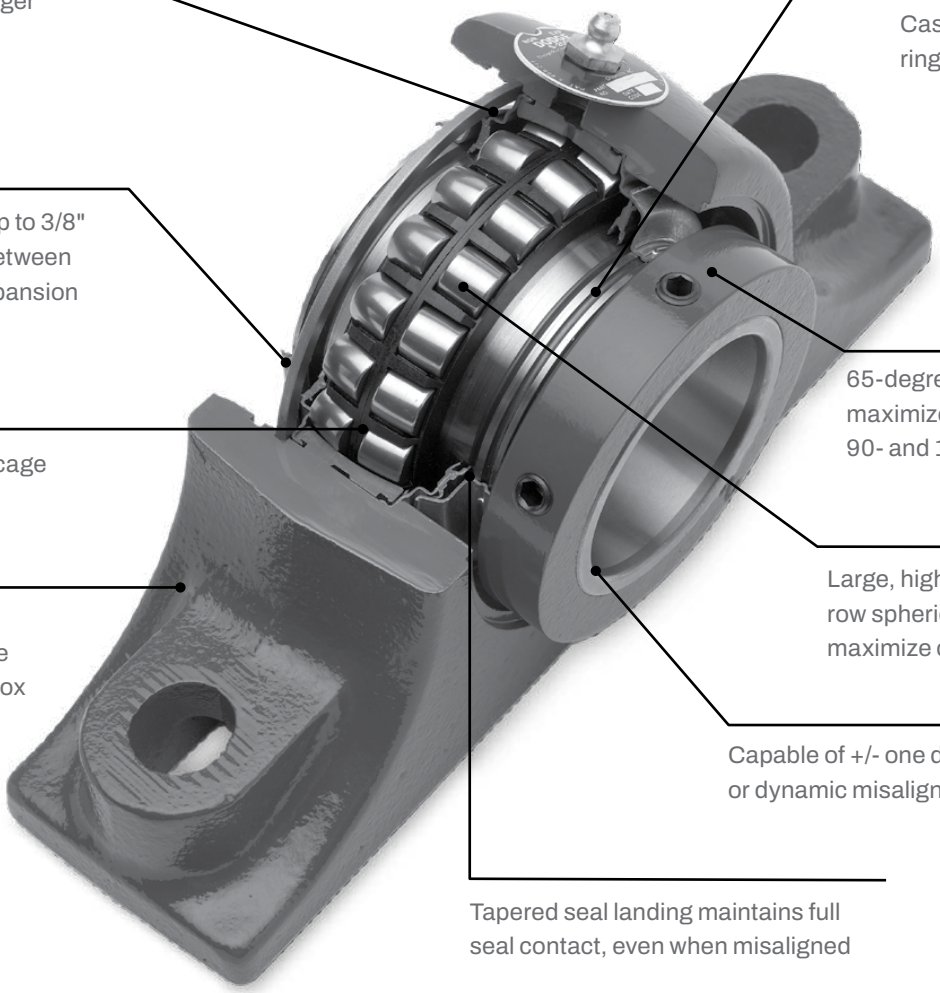

Corrosion-resistant flinger blocks contaminants

Case-carburized inner ring resists cracking

Expansion capability up to 3/8" and field-convertible between expansion and non-expansion

65-degree set screw mounting maximizes holding power over 90- and 120-degree options

Reinforced polyamide cage

Large, high-capacity double-row spherical roller bearings maximize contact area

Factory-assembled and pre-lubricated to be shaft-ready out of the box

Capable of +/- one degree static or dynamic misalignment

Tapered seal landing maintains full seal contact, even when misaligned

S-2000

Superior sealing system

Trident seals for low-to-medium speed

- Face-rubbing triple-lip seal and steel flinger shield from contamination
- Tapered seal landing maintains positive contact up to +/- two one misalignment
- Patented design

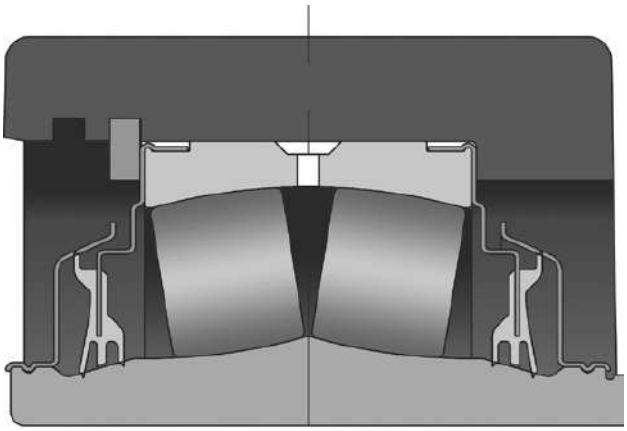

Labyrinth seals for high speeds

- High speed for relatively clean environments
- Face-rubbing triple-lip seal and steel flinger shield from contamination
- Seal operates with up to +/- one degree of misalignment
- Patented design

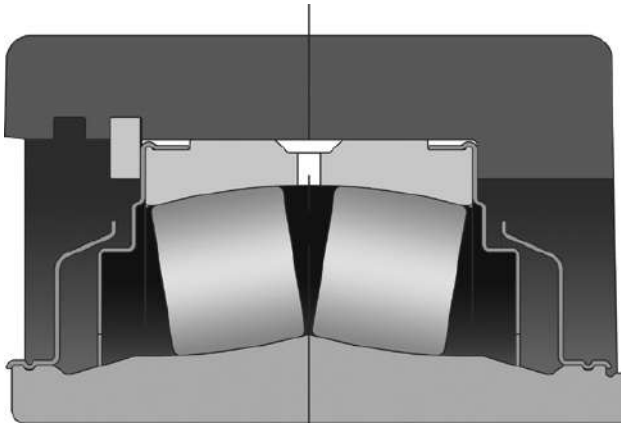

S-2000

E-dimensioned units

E-dimensioned units available to be dimensionally interchangeable with Type E mounted tapered roller bearings. Available in two- and four-bolt pillow block, flange, and piloted flange housing styles.



Steel-housed (HD) units

S-2000 bearings are available in high-quality, durable steel housings designed specifically for harsh applications that demand superior housing strength. With all the features of the S-2000 bearings, the high-capacity cast-steel housings provide additional toughness and resistance to impact-loading in industry-common dimensions. Housing configurations include two- and four-bolt pillow blocks and four-bolt flanges.



Specification

S-2000

S-2000 mounted spherical roller bearings are general purpose, high-capacity, double-row spherical roller bearings. All are mounted in single-piece, high-precision housings machined to industry-leading tolerances. Bearings are mounted to shafts by means of set screw collars, with 65- degree set screw spacing for maximum clamping force.

Housings are available in a variety of styles from pillow blocks, flanges, piloted flanges, and take-ups. Standard housing material is a high-performance cast iron. S-2000 HD housings use a high quality, durable steel. Stainless hardware is available for applications in extremely harsh environments.



How to order

There are two ways to specify Dodge bearings—by six-digit part number or by description. Most of the products offered have part numbers with listings shown throughout this catalog. Use of part numbers ensures accurate order processing.

When part numbers are not shown, the product may be specified by description. This method is used when ordering units that include modifications or options. To order by description, use the nomenclature key shown for each product, adding any special instructions to the end of the description for options not covered by the nomenclature.

Special bearing requirements

Depending on the bearing, a wide variety of lubricants, seals, locking devices, finishes, and adjustments are available for a wide range of applications from general purpose to extreme ambient temperatures, high speeds, or high loads.

Special lubricant options usually involve set-up charges, minimum quantities, and price premiums. To order, specify the type of lubricant required at the end of the product name or after the standard part number.

Example:

F4B-XX-207 except with Mobil HTS #2 grease

or

P/N-XXXXXX except with Mobil HTS #2 grease

Other special requirements not listed

For applications requiring modifications not listed, contact Application Engineering for bearings at +1 864 284 5700.

Nomenclature

S-2000

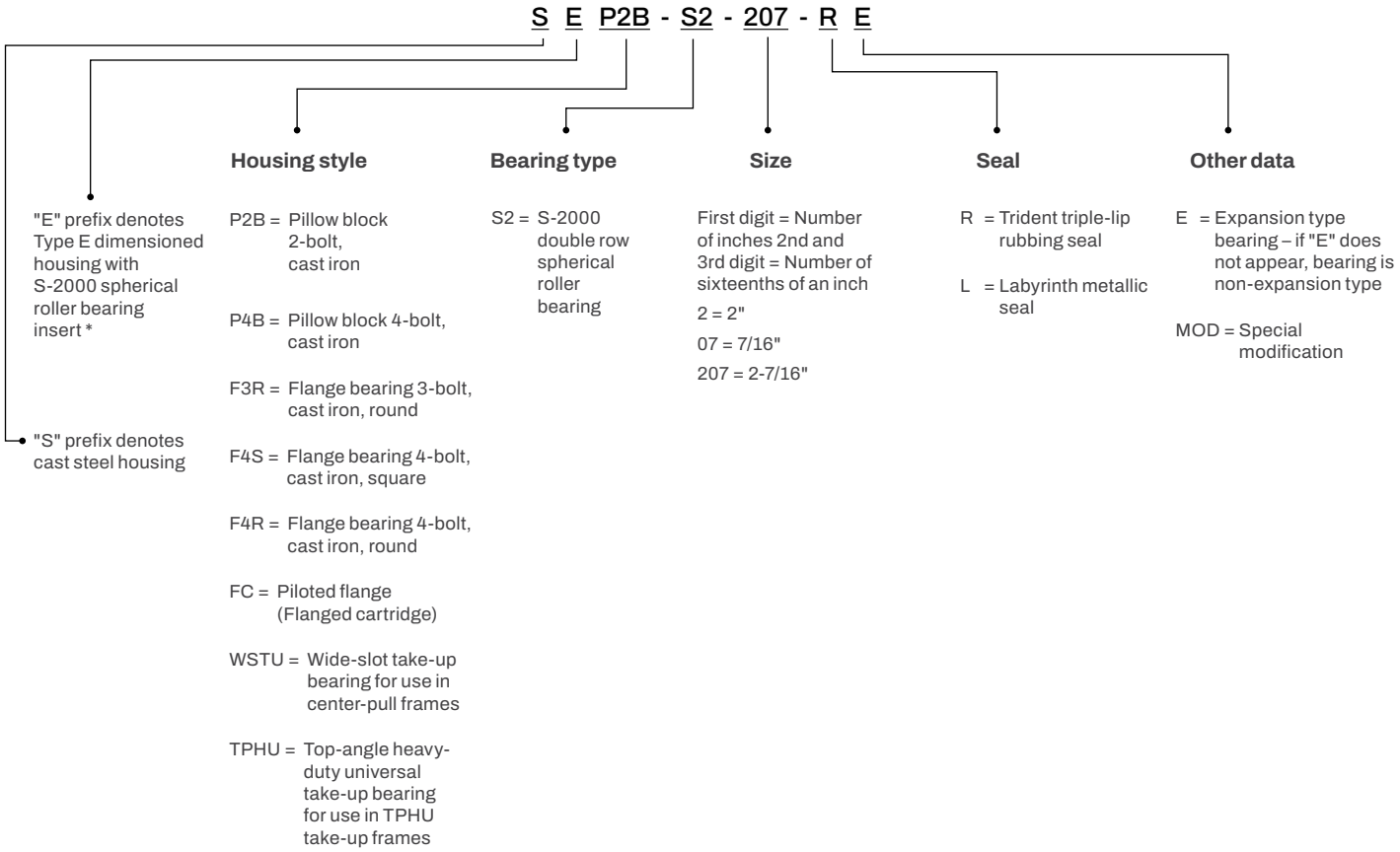

Selection

S-2000

Dodge spherical roller bearings have the capacity to carry heavy radial loads and combined radial and thrust loads. The maximum recommended load which can be applied is limited by various components in the system such as bearing, housing, shaft, shaft attachment, speed and life requirements as listed in this catalog. Dodge spherical roller bearings have been applied successfully even when these limits have been exceeded under controlled operating conditions. Contact Application Engineering at +1 864 284 5700 for applications which exceed the recommendations of this catalog.

L_{10} hours life – The life which may be expected from at least 90 percent of a given group of bearings operating under identical conditions.

$$L_{10} = \left(\frac{C_{90}}{P}\right)^{10/3} \times \left(\frac{16{,}667}{rpm}\right)$$

Where:

C_{90} = Dynamic capacity, lbs (Table 1)

P = Equivalent radial load, lbs

General

Heavy service – For heavy shock loads, frequent shock loads, or severe vibrations, add up to 50 percent (according to severity of conditions) to the equivalent radial load. Consult Application Engineering for additional selection assistance.

Thrust load values shown in the table below are recommended as a guide for general applications that will give adequate L_{10} life for pillow blocks. The maximum thrust load should not exceed values shown on table below. Where substantial radial load is also present, it is advisable to calculate actual L_{10} life to assure that it meets the requirements. The effectiveness of the shaft attachment to carry thrust load depends on proper tightening, shaft tolerance (see table below) and shaft deflections. Therefore, it is advisable to use auxiliary thrust carrying devices such as shaft shoulder, snap ring or a thrust collar to locate the bearing under thrust loads heavier than shown below, or where extreme reliability is desired.

Rpm Range	20—200	201—2000	Over 2000
Recommended thrust load	C/20	C/40	C/60

The shaft tolerances recommended below are adequate for normal radial and radial/thrust load applications. The radial load is limited by the attachment to the shaft (see Table 1). Where the applied radial load (F_R) exceeds this limit (maximum allowable slip fit radial load), a snug-to-light press fit of the shaft is required. Since the allowable load, especially at a low speed, is very large, the shaft should be checked to assure adequate shaft strength. The magnitude and direction of both the thrust and radial load must be taken into account when selecting a housing. When pillow blocks are utilized, heavy loads should be directed through the base. Where uplift loads are involved, see Tables 4, 5, and 6 for maximum values. Where a load pulls the housing away from the mounting base, both the hold-down bolts and housing must be of adequate strength. Auxiliary load carrying devices such as shear bars are advisable for side or end loading of pillow blocks and radial loads for flange units.

Shaft tolerances

Shaft size (in)	S-2000 (in)
Up—1-1/2	+.0000 to -.0005
1-9/16—4	+.000 to -.001
4-7/16—5	+.000 to -.0015

L_{10} life adjustment – The calculated L_{10} life obtained from this procedure is subject to life adjustment factors in accordance with ABMA standards described on Table 5. Consult Application Engineering for assistance.

Selecting bearings supporting radial loads only

1. Define L_{10} life hours desired.
2. Establish bearing radial load, F_R (F_R = P for pure radial load conditions).
3. Establish rpm.

Using the easy selection Table 2, under the rpm column, the equivalent radial load that equals or is higher than the application radial load for the desired life. The shaft size on the far left will be the minimum shaft size that you can use for your application. If the desired life is different than the values shown on the chart, use alternate Method A shown below.

Example:

L_{10} life = 30,000 hours

Radial load = 4,000 lbs

Rpm = 1,020

At the intersection of the 1,020 rpm column and the 30,000 hours L_{10} life row, the allowable equivalent radial load of 4,721 lbs. for a 2-7/16" bearing exceeds the 4000 lbs. applied radial load. A bearing with a bore of 2-7/16" may be used for this application.

S-2000

Alternate method A – Selecting a bearing for an L_{10} life value not shown in the Easy Selection chart.

The L_{10} life equation can be rearranged so that the bearing dynamic capacity C is identified in terms of L_{10}, rpm and P.

$$C = \left(\frac{L_{10} \times rpm}{16{,}667} \right)^{0.3} \quad X \quad P$$

(P = F_R for pure radial load conditions)

Since the L_{10}, rpm and P are known, solve for C. Select from the dynamic capacity column on Table 1 the C value equal to or greater than the C value just calculated. The bore size on the far left represents the proper bore size selection. Check that the application rpm does not exceed the max. rpm on Table 1. Also check that the radial load does not exceed the maximum allowable slip fit radial load shown on Table 1. If it does, a line-to-line to light press fit of shaft is required. When selecting an L_{10} life of less than 30,000 hours, particular attention must be paid to shaft deflection and proper lubricant selection.

Selecting bearings supporting combination radial and thrust loads

When a bearing supports both a radial load and a thrust load, the loading on the two rows is shared unequally depending on the ratio of thrust to radial load. The use of the X (radial factor) and Y (thrust factor) from Table 1 converts the applied throughst load and radial loads to an equivalent radial load having the same effect on the life of the bearing as a radial load of this magnitude.

The equivalent radial load:

$$P = XF_R + YF_A$$

Where:

P = Equivalent radial load, lbs

F_R = Radial load, lbs (see Table 1 for allowable slip fit maximum load)

F_A = Thrust (axial) load, lbs

e = Thrust load to radial load factor (Table 1)

X = Radial load factor (Table 1)

Y = Thrust load factor (Table 1)

To find X and Y, calculate F_A/F_R and compare to e for the selected bore size. Determine X and Y from Table 1 depending on whether F_A/F_R is equal to or less than e, or F_A/F_R is greater than e. Substitute all known values into the equivalent radial load equation. P (equivalent radial load) can be used in the life formula to determine L_{10}, or it can be compared to the allowable equivalent radial load ratings for the speed and hours life desired in the easy selection Table 2.

Selecting bearings supporting only thrust loads

Spherical roller bearings generally are not recommended for pure thrust load applications. However, they will perform satisfactorily under very light pure thrust loads. Consult Application Engineering at +1 864 284 5700.

Selecting lubrication

S-2000 spherical roller bearings are lubricated at the factory with Mobilgrease XHP 222 grease. Mobilgrease XHP 222 grease is a superior industrial grease using a lithium-complex thickener and highly-refined base oil. This grease will adequately handle low and medium speeds with low and medium loads at normal temperatures as defined on Table 3. For very low and high speeds, for heavy loads and for low and high temperatures, special greases must be used. Contact Application Engineering at +1 864 284 5700. Dodge engineers will recommend bearings and lubricants for the above unusual conditions. Dodge also has the expertise to custom design and build special bearings for your needs. The only maintenance requirement is periodic relubrication at regular intervals as outlined in the appropriate instruction manuals.

Misalignment considerations

In nearly all applications, good design practice requires two bearings supporting the shaft. In cases where three or more bearings are installed, unless precautions are taken to line the bearings up both vertically and horizontally, it is possible to induce heavy loads. In the case of two bearings, alignment is not as critical, especially with unitized spherical roller bearings. S-2000 bearings are designed to allow a maximum of +/- one degree of static and dynamic misalignment. To ensure good alignment, mounting surfaces must be checked for flatness and must lie in the same plane. When tightening base bolts, each bolt should be alternately tightened in incremental torque values until full torque is achieved to prevent the angular shifting of the pillow block that occurs when one bolt is tightened to its full torque. Shimming may be required to minimize misalignment. Full shims are recommend—partial shims could create housing flexing, causing the insert to pinch within the housing bore.

S-2000

Table 1: S-2000 spherical roller bearings capacity table

Shaft size (in)	Bearing series	e	F_A/F_R< e		F_A/F_R>e		Max. allowable slip fit radial load F_R* lbs	Dynamic capacity (C) lbs	Static capacity (C_0) lbs	Maximum speed **	
			X	Y	X	Y				Labyrinth rpm	Trident triple lip rpm
1-3/8											
1-7/16	22208	0.28	1.0	2.4	0.67	3.6	3,750	22,700	21,000	3,600	2,900
1-1/2											
1-11/16											
1-3/4	22209	0.26	1.0	2.6	0.67	3.9	3,750	23,400	22,000	3,360	2,460
1-15/16											
2	22210	0.24	1.0	2.8	0.67	4.2	4,000	24,500	24,000	3,180	2,200
2-3/16	22211	0.23	1.0	2.9	0.67	4.3	4,860	29,000	29,000	2,700	1,950
2-7/16	22213	0.24	1.0	2.8	0.67	4.2	6,840	45,000	47,500	2,250	1,740
2-11/16											
2-15/16	22215	0.22	1.0	3.1	0.67	4.6	7,500	48,600	53,000	2,040	1,490
3											
3-7/16	22218	0.23	1.0	2.9	0.67	4.3	11,500	77,600	81,500	1,560	1,280
3-15/16	22220	0.24	1.0	2.8	0.67	4.2	14,400	96,000	104,000	1,320	1,075
4-7/16	22222	0.25	1.0	2.7	0.67	4.1	18,400	123,000	132,000	1,200	990
4-15/16	22226	0.26	1.0	2.6	0.67	3.9	25,700	171,000	196,000	1,020	870

* If load exceeds the maximum allowable slip fit load, line- to-line to light press fit of shaft required. Maximum slip fit radial loads apply if recommended shaft sizes are used.

** Maximum speed is dependent on load and ambient conditions, consult Application Engineering.

S-2000

Table 2: Easy selection table for S-2000 double row spherical roller bearings

Shaft size (in)	L_{10} life hours	Allowable equivalent radial load rating (lbs) at various revolutions per minute																
		50	100	150	250	500	870	1020	1200	1320	1560	1750	2040	2250	2700	3180	3360	3600
1-3/8 to 1-1/2	10,000	8183	6646	5885	5049	4101	3473	3311	3154	3065	2915	2816	2690	2612	2473	2354	2316	2268
	30,000	5885	4780	4233	3631	2950	2498	2382	2268	2204	2097	2026	1934	1878	1778	1693	1666	1631
	40,000	5399	4385	3883	3331	2706	2291	2185	2081	2022	1923	1858	1775	1723	1631	1553	1528	1496
	60,000	4780	3883	3438	2950	2396	2029	1934	1842	1790	1703	1645	1571	1526	1445	1375	1353	1325
	100,000	4101	3331	2950	2530	2055	1741	1660	1581	1536	1461	1411	1348	1309	1239	1180	1161	1137
1-11/16 to 1-3/4	10,000	8435	6851	6067	5205	4227	3580	3413	3251	3159	3005	2903	2773	2692	2549	2427	2387	—
	30,000	6067	4928	4363	3743	3041	2575	2455	2338	2272	2161	2088	1994	1936	1833	1745	1717	—
	40,000	5565	4520	4002	3434	2789	2362	2252	2145	2084	1983	1915	1829	1776	1682	1601	1575	—
	60,000	4928	4002	3544	3041	2470	2092	1994	1899	1846	1755	1696	1620	1573	1489	1418	1395	—
	100,000	4227	3434	3041	2609	2119	1794	1711	1629	1583	1506	1455	1390	1349	1278	1216	1196	—
1-15/16 to 2	10,000	8831	7173	6352	5449	4426	3749	3574	3404	3308	3146	3040	2903	2819	2669	2541	—	—
	30,000	6352	5159	4568	3919	3183	2696	2570	2448	2379	2263	2186	2088	2027	1919	1828	—	—
	40,000	5827	4733	4191	3595	2920	2473	2358	2246	2182	2076	2005	1915	1860	1761	1676	—	—
	60,000	5159	4191	3711	3183	2586	2190	2088	1988	1932	1838	1776	1696	1647	1559	1484	—	—
	100,000	4426	3595	3183	2731	2218	1879	1791	1706	1658	1577	1523	1455	1413	1338	1273	—	—
2-3/16	10,000	10454	8491	7518	6450	5239	4437	4230	4029	3915	3724	3598	3436	3337	3159	—	—	—
	30,000	7518	6107	5407	4639	3768	3191	3043	2898	2816	2678	2588	2471	2400	2272	—	—	—
	40,000	6897	5602	4960	4256	3457	2927	2791	2658	2583	2457	2374	2267	2201	2084	—	—	—
	60,000	6107	4960	4392	3768	3061	2592	2471	2354	2287	2176	2102	2007	1949	1845	—	—	—
	100,000	5239	4256	3768	3233	2626	2224	2120	2019	1962	1866	1803	1722	1672	1583	—	—	—
2-7/16	10,000	16221	13176	11667	10009	8130	6885	6564	6252	6076	5779	5583	5332	5177	—	—	—	—
	30,000	11667	9476	8391	7199	5847	4952	4721	4497	4370	4156	4015	3835	3724	—	—	—	—
	40,000	10702	8693	7697	6603	5364	4543	4331	4125	4008	3813	3683	3518	3416	—	—	—	—
	60,000	9476	7697	6815	5847	4749	4022	3835	3652	3549	3376	3261	3115	3025	—	—	—	—
	100,000	8130	6603	5847	5016	4075	3451	3290	3133	3045	2896	2798	2672	2595	—	—	—	—
2-11/16 to 3	10,000	17519	14230	12600	10810	8780	7436	7089	6752	6562	6241	6030	5758	—	—	—	—	—
	30,000	12600	10234	9062	7775	6315	5348	5099	4856	4719	4489	4337	4142	—	—	—	—	—
	40,000	11558	9388	8313	7132	5793	4906	4677	4455	4329	4118	3978	3799	—	—	—	—	—
	60,000	10234	8313	7361	6315	5129	4344	4142	3945	3833	3646	3522	3364	—	—	—	—	—
	100,000	8780	7132	6315	5418	4401	3727	3553	3384	3289	3128	3022	2886	—	—	—	—	—
3-7/16	10,000	27972	22721	20118	17260	14019	11873	11320	10781	10477	9965	—	—	—	—	—	—	—
	30,000	20118	16341	14470	12414	10083	8539	8141	7754	7535	7167	—	—	—	—	—	—	—
	40,000	18455	14990	13273	11387	9249	7833	7468	7113	6912	6575	—	—	—	—	—	—	—
	60,000	16341	13273	11753	10083	8190	6936	6613	6298	6121	5822	—	—	—	—	—	—	—
	100,000	14019	11387	10083	8650	7026	5951	5673	5403	5251	4994	—	—	—	—	—	—	—

Only the labyrinth seal (L seal) may be used to the right of the heavy line.

In the light shaded area, a line-to-line to light press fit on the shaft is required.

S-2000

Table 2: Easy selection table for S-2000 double row spherical roller bearings

Shaft size (in)	L_{10} life hours	Allowable equivalent radial load rating (lbs) at various revolutions per minute																
		50	100	150	250	500	870	1020	1200	1320	1560	1750	2040	2250	2700	3180	3360	3600
3-15/16	10,000	34605	28108	24889	21352	17344	14688	14004	13337	12962	—	—	—	—	—	—	—	—
	30,000	24889	20216	17900	15357	12474	10564	10072	9593	9322	—	—	—	—	—	—	—	—
	40,000	22831	18544	16420	14087	11442	9691	9239	8799	8551	—	—	—	—	—	—	—	—
	60,000	20216	16420	14540	12474	10132	8581	8181	7792	7572	—	—	—	—	—	—	—	—
	100,000	17344	14087	12474	10702	8692	7362	7019	6685	6496	—	—	—	—	—	—	—	—
4-7/16	10,000	44338	36013	31889	27358	22221	18819	17942	17089	—	—	—	—	—	—	—	—	—
	30,000	31889	25902	22935	19676	15982	13535	12905	12291	—	—	—	—	—	—	—	—	—
	40,000	29252	23760	21039	18049	14661	12416	11838	11274	—	—	—	—	—	—	—	—	—
	60,000	25902	21039	18629	15982	12982	10994	10482	9983	—	—	—	—	—	—	—	—	—
	100,000	22221	18049	15982	13711	11137	9432	8993	8565	—	—	—	—	—	—	—	—	—
4-15/16	10,000	61640	50067	44333	38034	30893	26164	24944	—	—	—	—	—	—	—	—	—	—
	30,000	44333	36009	31885	27355	22219	18817	17941	—	—	—	—	—	—	—	—	—	—
	40,000	40667	33032	29249	25093	20382	17262	16457	—	—	—	—	—	—	—	—	—	—
	60,000	36009	29249	25899	22219	18047	15285	14572	—	—	—	—	—	—	—	—	—	—
	100,000	30893	25093	22219	19062	15483	13113	12502	—	—	—	—	—	—	—	—	—	—

Only the labyrinth seal (L seal) may be used to the right of the heavy line.

In the light shaded area, a line-to-line to light press fit on the shaft is required.

Table 3: Definition of operating conditions for unitized spherical roller bearings

Low speed	Up to 20% of maximum rpm (Table 1)
Medium speed	Over 20% to 80% of maximum rpm
High speed	Over 80% of maximum rpm
Light load	Up to 8% of C (Table 1)
Normal load	Over 8% to 18% of C
Heavy load	Over 18% of C
	C = Dynamic capacity
Low temperature	-20 °F to -100 °F
Medium temperature	Over 20 °F to 200 °F
High temperature	Over 200 °F to 250 °F

S-2000

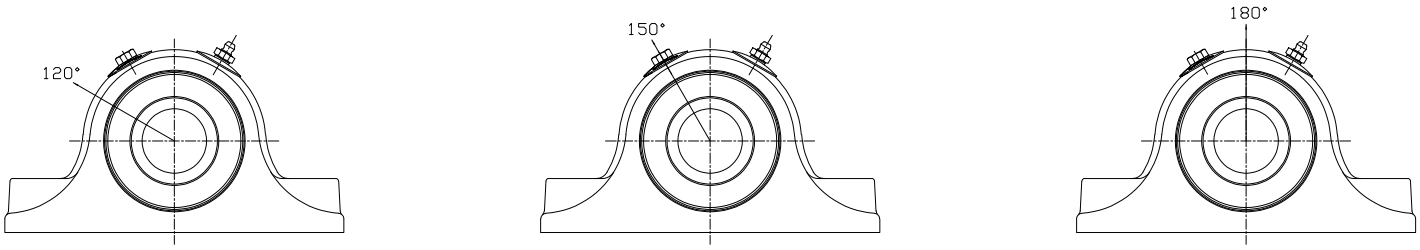

Table 4: S-2000 housing rating, 2-bolt, cast iron*

Bore size (in)	Maximum recommended housing cap loads (lbs)		
	120°	150°	180°
1-3/8 to 1-1/2	2110	2640	3100
1-5/8 to 1-3/4	2380	2980	3500
1-15/16 to 2	3130	3910	4600
2-3/16	3330	4160	4900
2-7/16	3330	4160	4900
2-11/16 to 3	4420	5520	6500
3-3/16 to 3-7/16	4620	5780	6800
3-15/16	7500	9350	11000

Table 5: S-2000 housing rating, 4-bolt, cast iron*

Bore size (in)	Maximum recommended housing cap loads (lbs)		
	120°	150°	180°
1-15/16 - 2	3200	4000	4700
2-3/16	3300	4100	4800
2-7/16	3810	4760	5600
2-11/16 to 3	4620	5780	6800
3-7/16	4700	5870	6900
3-15/16	7500	9350	11000
4-7/16	9900	12330	14500
4-15/16	13400	16750	19700

* When utilizing heavy cap loads on pillow block housings, the installation must adhere to the following procedures:

1. The pillow block base bolts must be of high strength (Grade 8) bolts and properly tightened to mounting structure.
2. Stop bars (shear strips) should be used against the plummer block where side loads are encountered.
3. In all cases where loads are heavy, the L_{10} life of the bearing should be checked for proper selection and life requirements.

S-2000

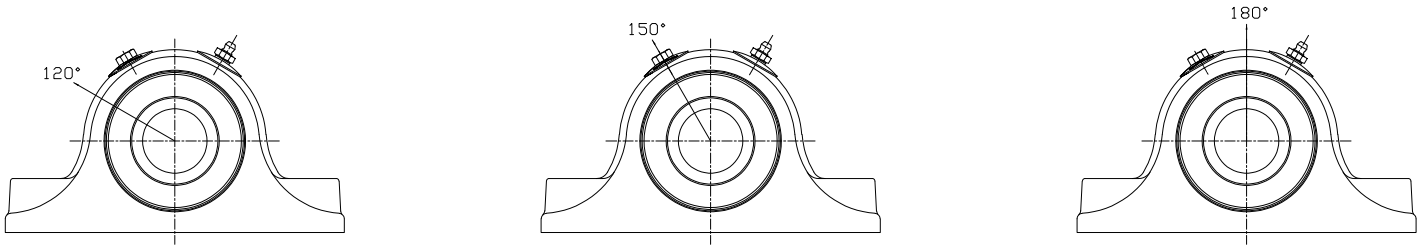

Table 6: S-2000 steel (HD) - housing ratings*

Shaft sizes (in)	Bearing series	Maximum recommended housing loads (lbs)	
		P2B	P4B
1-3/8	22208	24400	
1-7/16			
1-1/2			
1-11/16	22209	26400	
1-3/4			
1-15/16	22210	30200	
2			
2-3/16	22211	35400	
2-7/16	22213	51300	52800
2-11/16	22215	59700	60000
2-15/16			
3			
3-7/16	22218	90700	95500
3-15/16	22220		115000
4-7/16	22222		152100
4-15/16	22226		188200

* It is important to note that the values listed above are housing fracture loads from various applied directions. These loads may exceed bearing, mounting bolt and/or shaft capacities. Applications subject to heavy housing loads, particularly shock loads, must adhere to the following procedures.

(1) The pillow block base bolts must be of high strength (Grade 8) bolts and properly tightened to mounting structure.

(2) Stop bars (shear strips) should be used against the plummer block where side loads are encountered.

(3) In all cases where loads are heavy, the L_{10} life of the bearing should be checked for proper selection and life requirements.,

Dimensions

S-2000 pillow block – inch

2-bolt

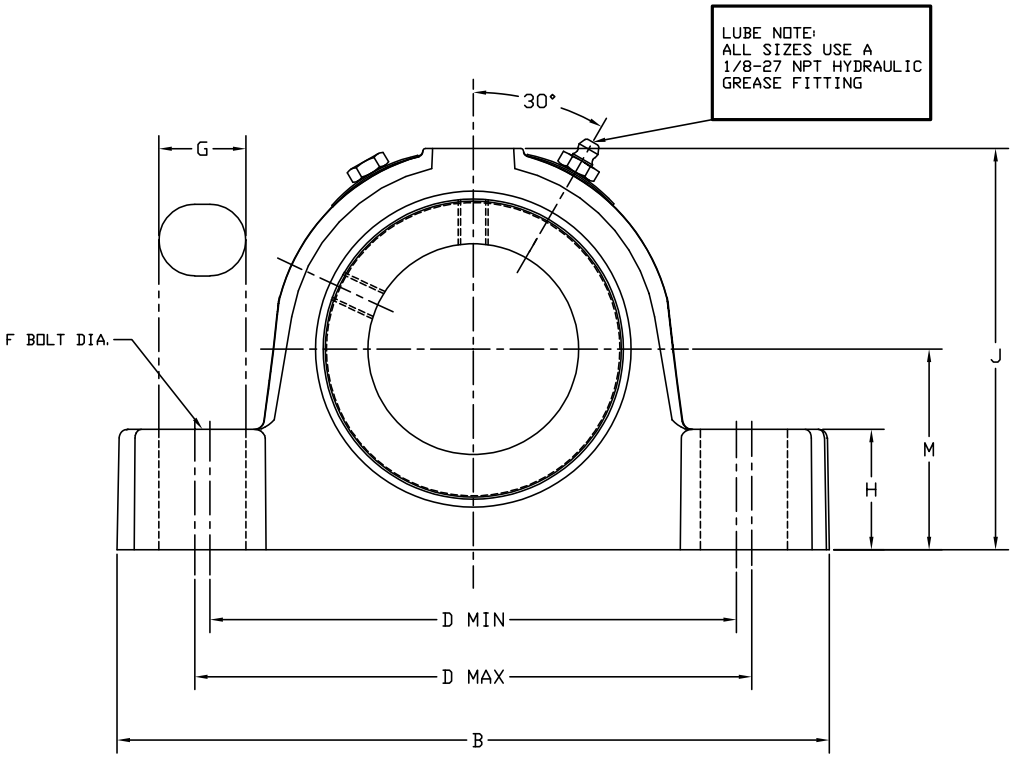

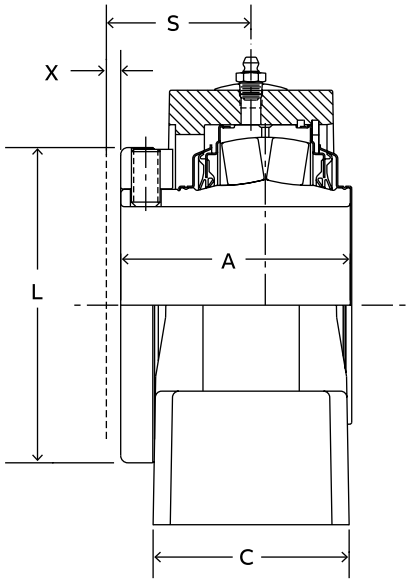

Expansion

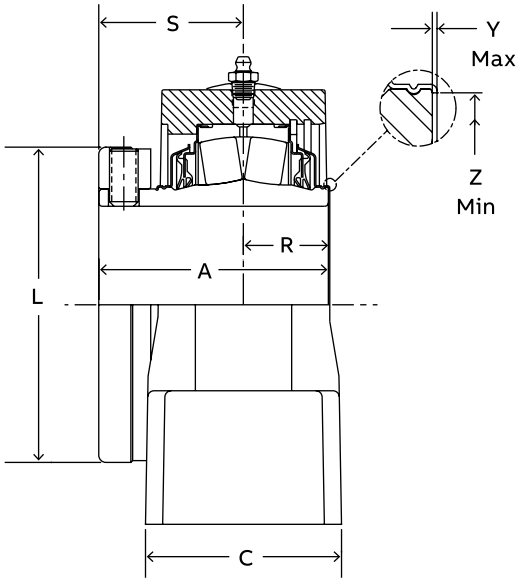

Non-Expansion

S-2000 pillow block – inch

2-bolt

Bearing series	Shaft size	Trident seal			
		Non-expansion		Expansion	
		Part number	Description	Part number	Description
22208	1-3/8	070272	P2B-S2-106R	070295	P2B-S2-106RE
	1-7/16	070273	P2B-S2-107R	070296	P2B-S2-107RE
	1-1/2	070274	P2B-S2-108R	070297	P2B-S2-108RE
22209	1-11/16	070276	P2B-S2-111R	070299	P2B-S2-111RE
	1-3/4	070277	P2B-S2-112R	070300	P2B-S2-112RE
22210	1-15/16	070278	P2B-S2-115R	070301	P2B-S2-115RE
	2	070279	P2B-S2-200R	070302	P2B-S2-200RE
22211	2-3/16	070280	P2B-S2-203R	070303	P2B-S2-203RE
22213	2-7/16	070282	P2B-S2-207R	070305	P2B-S2-207RE
22215	2-11/16	070284	P2B-S2-211R	070307	P2B-S2-211RE
	2-15/16	070285	P2B-S2-215R	070308	P2B-S2-215RE
	3	070286	P2B-S2-300R	070309	P2B-S2-300RE
22218	3-7/16	070288	P2B-S2-307R	070311	P2B-S2-307RE
22220	3-15/16	070290	P2B-S2-315R	070313	P2B-S2-315RE

Bearing series	Shaft size	Labyrinth seal			
		Non-expansion		Expansion	
		Part number	Description	Part number	Description
22208	1-3/8	070318	P2B-S2-106L	070341	P2B-S2-106LE
	1-7/16	070319	P2B-S2-107L	070342	P2B-S2-107LE
	1-1/2	070320	P2B-S2-108L	070343	P2B-S2-108LE
22209	1-11/16	070322	P2B-S2-111L	070345	P2B-S2-111LE
	1-3/4	070323	P2B-S2-112L	070346	P2B-S2-112LE
22210	1-15/16	070324	P2B-S2-115L	070347	P2B-S2-115LE
	2	070325	P2B-S2-200L	070348	P2B-S2-200LE
22211	2-3/16	070326	P2B-S2-203L	070349	P2B-S2-203LE
22213	2-7/16	070328	P2B-S2-207L	070351	P2B-S2-207LE
22215	2-11/16	070330	P2B-S2-211L	070353	P2B-S2-211LE
	2-15/16	070331	P2B-S2-215L	070354	P2B-S2-215LE
	3	070332	P2B-S2-300L	070355	P2B-S2-300LE
22218	3-7/16	070334	P2B-S2-307L	070357	P2B-S2-307LE
22220	3-15/16	070336	P2B-S2-315L	070359	P2B-S2-315LE

Shaft size	A	B	C	D		F bolt dia.	G	H	J	L	M	R	S	X total exp	Y	Z
				Min.	Max.											
1-3/8																
1-7/16	2.53	6.88	1.95	4.81	5.20	1/2	0.81	1.13	3.88	2.75	1.88	0.88	1.66	3/16	0.020	1.80
1-1/2																
1-11/16	2.67	7.38	2.06	5.31	5.70	1/2	0.81	1.25	4.27	3.19	2.13	0.81	1.86	1/4	0.020	2.08
1-3/4																
1-15/16	2.84	8.38	2.50	6.06	6.44	5/8	0.95	1.31	4.56	3.44	2.25	0.86	1.98	1/4	0.020	2.30
2																
2-3/16	2.94	8.88	2.63	6.56	6.94	5/8	0.95	1.50	5.00	3.75	2.50	0.91	2.03	1/4	0.025	2.60
2-7/16	3.20	9.25	2.81	6.94	7.31	5/8	0.95	1.63	5.59	4.06	2.75	1.13	2.08	1/4	0.025	2.95
2-11/16																
2-15/16	3.59	10.44	3.08	7.94	8.31	3/4	1.06	1.88	6.38	4.70	3.25	1.14	2.45	1/4	0.025	3.47
3																
3-7/16	4.02	13.00	3.42	9.38	10.63	7/8	1.63	2.25	7.50	5.50	3.75	1.41	2.61	1/4	0.025	4.05
3-15/16	4.47	15.25	3.94	10.63	12.88	1	2.25	2.44	8.38	6.00	4.25	1.56	2.91	5/16	0.025	4.50

S-2000 pillow blocks – inch

4-bolt

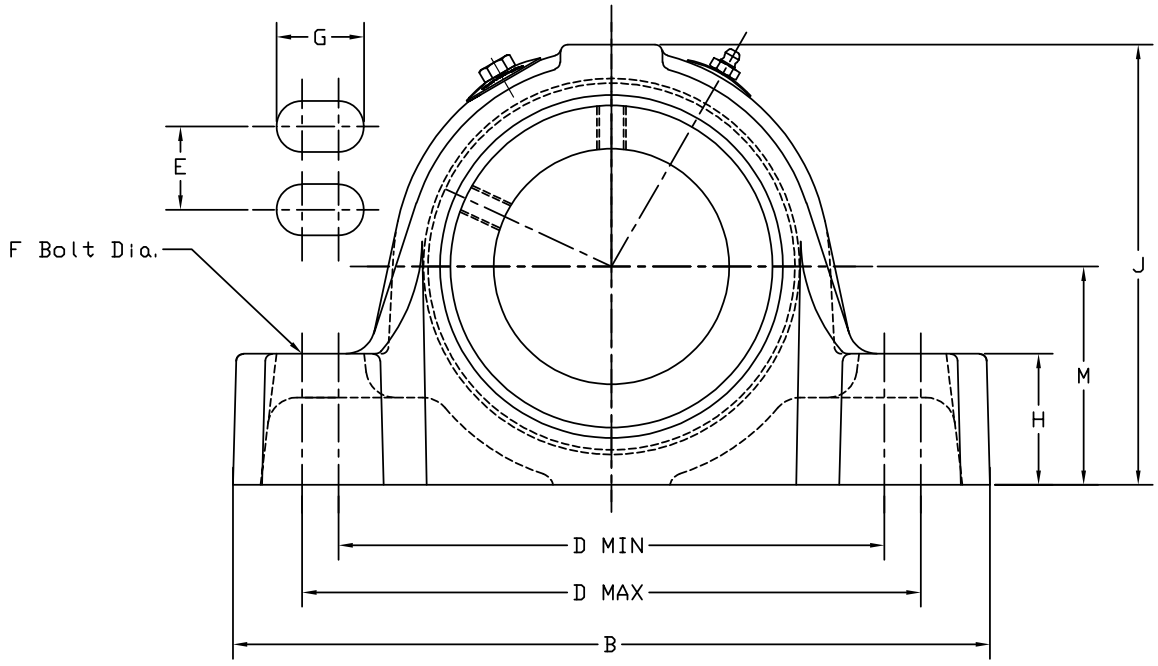

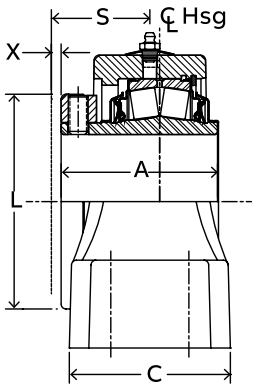

1-15/16 thru 3-15/16"
Construction
Expansion

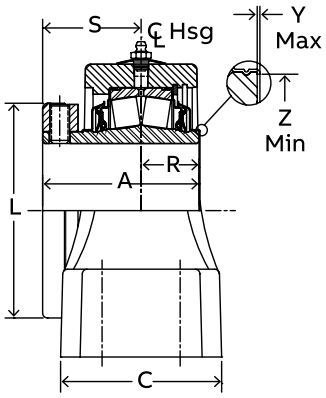

1-15/16 thru 3-15/16"
Construction
Non-Expansion

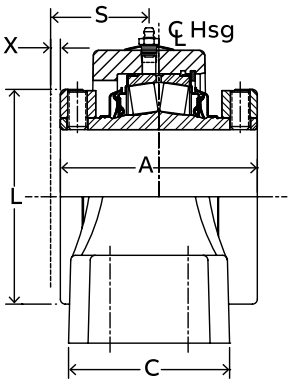

4-7/16 thru 4-15/16"
Construction
Expansion

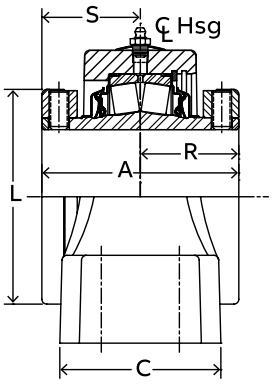

4-7/16 thru 4-15/16"
Construction
Non-Expansion

S-2000 pillow blocks – inch

4-bolt

Trident seal

Bearing series	Shaft size	Non-expansion		Expansion	
		Part number	Description	Part number	Description
22210	1-15/16	070361	P4B-S2-115R	070379	P4B-S2-115RE
	2	070362	P4B-S2-200R	070380	P4B-S2-200RE
22211	2-3/16	070363	P4B-S2-203R	070381	P4B-S2-203RE
22213	2-7/16	070365	P4B-S2-207R	070383	P4B-S2-207RE
22215	2-11/16	070367	P4B-S2-211R	070385	P4B-S2-211RE
	2-15/16	070368	P4B-S2-215R	070386	P4B-S2-215RE
	3	070369	P4B-S2-300R	070387	P4B-S2-300RE
22218	3-7/16	070371	P4B-S2-307R	070389	P4B-S2-307RE
22220	3-15/16	070373	P4B-S2-315R	070391	P4B-S2-315RE
22222	4-7/16	070375	P4B-S2-407R	070393	P4B-S2-407RE
22226	4-15/16	070377	P4B-S2-415R	070395	P4B-S2-415RE

Labyrinth seal

Bearing series	Shaft size	Non-expansion		Expansion	
		Part number	Description	Part number	Description
22210	1-15/16	070397	P4B-S2-115L	070415	P4B-S2-115LE
	2	070398	P4B-S2-200L	070416	P4B-S2-200LE
22211	2-3/16	070399	P4B-S2-203L	070417	P4B-S2-203LE
22213	2-7/16	070401	P4B-S2-207L	070419	P4B-S2-207LE
22215	2-11/16	070403	P4B-S2-211L	070421	P4B-S2-211LE
	2-15/16	070404	P4B-S2-215L	070422	P4B-S2-215LE
	3	070405	P4B-S2-300L	070423	P4B-S2-300LE
22218	3-7/16	070407	P4B-S2-307L	070425	P4B-S2-307LE
22220	3-15/16	070409	P4B-S2-315L	070427	P4B-S2-315LE
22222	4-7/16	070411	P4B-S2-407L	070429	P4B-S2-407LE
22226	4-15/16	070413	P4B-S2-415L	070431	P4B-S2-415LE

Shaft size	A	B	C	D		E	F bolt dia.	G	H	J	L	M	R	S	X total exp	Y	Z
				Min.	Max.												
1-15/16	2.84	8.00	3.19	6.06	6.44	1.59	1/2	0.81	1.31	4.56	3.44	2.25	0.84	2.0	1/4	0.020	2.30
2																	
2-3/16	2.94	8.88	3.25	6.56	6.94	1.69	1/2	0.81	1.50	5.00	3.75	2.50	0.91	2.03	1/4	0.025	2.60
2-7/16	3.20	9.25	3.38	6.94	7.31	1.75	1/2	0.81	1.63	5.59	4.06	2.75	1.08	2.13	1/4	0.025	2.95
2-11/16	3.59	10.44	3.75	7.94	8.31	1.88	5/8	0.94	1.88	6.44	4.70	3.25	1.09	2.50	1/4	0.025	3.47
2-15/16																	
3																	
3-7/16	4.02	13.00	4.13	9.38	10.63	2.00	3/4	1.50	2.25	7.56	5.50	3.75	1.44	2.58	1/4	0.025	4.05
3-15/16	4.47	15.25	4.50	12.13	12.88	2.25	3/4	1.25	2.44	8.44	6.00	4.25	1.64	2.83	5/16	0.025	4.50
4-7/16	6.53	16.50	4.75	13.00	14.00	2.50	3/4	1.38	2.75	9.63	6.45	4.75	3.08	3.45	3/8	—	—
4-15/16	6.91	18.63	5.38	15.00	16.00	2.75	7/8	1.50	3.00	11.13	7.45	5.50	3.27	3.64	3/8	—	—

S-2000 pillow block – inch

2-bolt, E-dimensioned

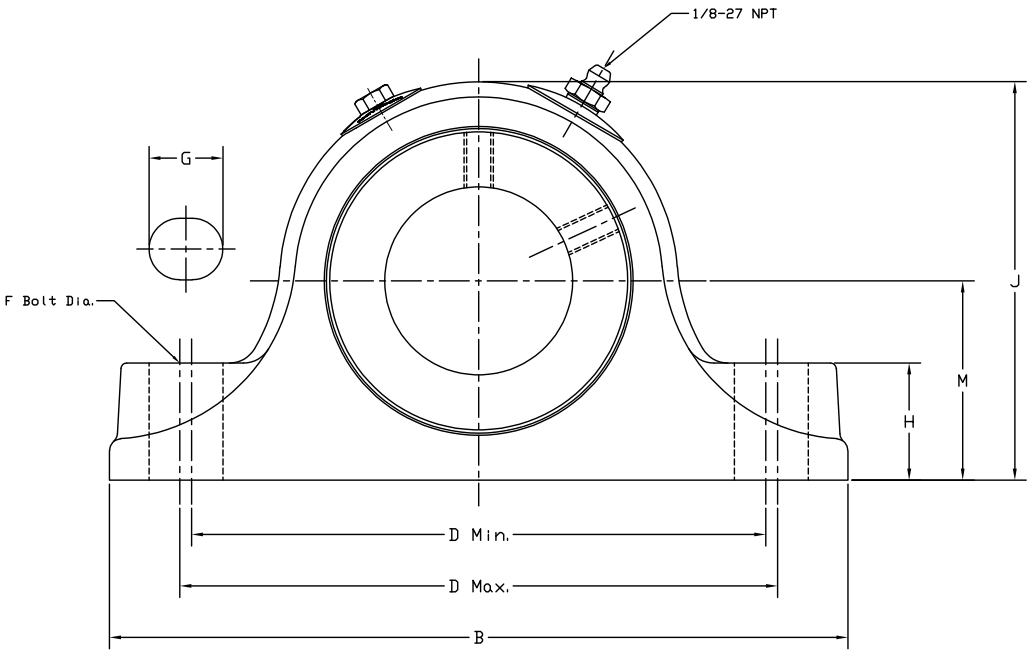

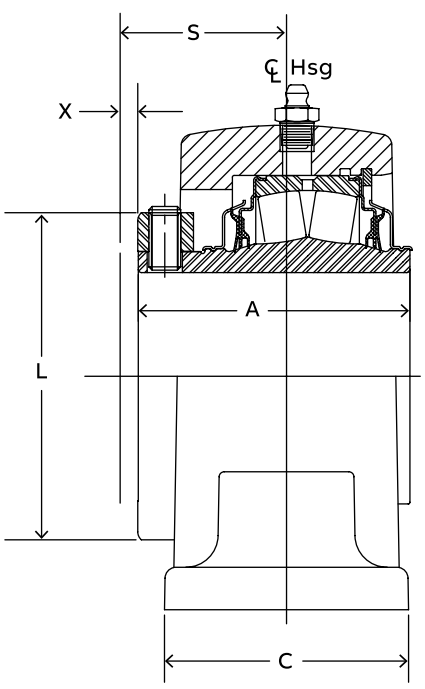

Expansion

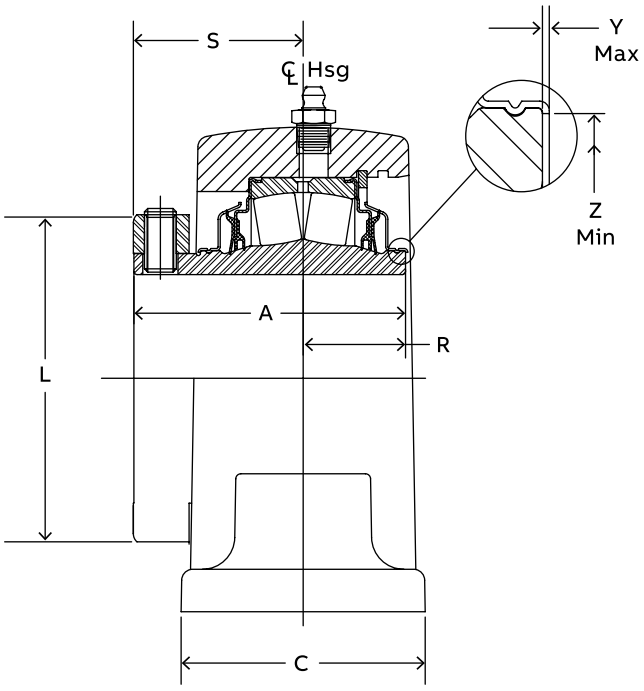

Non-Expansion

S-2000 pillow block – inch

2-bolt, E-dimensioned

Trident seal

Bearing series	Shaft size	Non-expansion		Expansion	
		Part number	Description	Part number	Description
22208	1-3/8	071389	EP2B-S2-106R	071400	EP2B-S2-106RE
	1-7/16	071390	EP2B-S2-107R	071401	EP2B-S2-107RE
22209	1-11/16	071391	EP2B-S2-111R	071402	EP2B-S2-111RE
22210	1-15/16	071392	EP2B-S2-115R	071403	EP2B-S2-115RE
	2	071393	EP2B-S2-200R	071404	EP2B-S2-200RE
22211	2-3/16	071394	EP2B-S2-203R	071405	EP2B-S2-203RE
22213	2-7/16	071395	EP2B-S2-207R	071406	EP2B-S2-207RE
22215	2-11/16	071396	EP2B-S2-211R	071407	EP2B-S2-211RE
	2-15/16	071397	EP2B-S2-215R	071408	EP2B-S2-215RE
	3	071398	EP2B-S2-300R	071409	EP2B-S2-300RE
22218	3-7/16	071399	EP2B-S2-307R	071410	EP2B-S2-307RE

Labyrinth seal

Bearing series	Shaft size	Non-expansion		Expansion	
		Part number	Description	Part number	Description
22208	1-3/8	071411	EP2B-S2-106L	071422	EP2B-S2-106LE
	1-7/16	071412	EP2B-S2-107L	071423	EP2B-S2-107LE
22209	1-11/16	071413	EP2B-S2-111L	071424	EP2B-S2-111LE
22210	1-15/16	071414	EP2B-S2-115L	071425	EP2B-S2-115LE
	2	071415	EP2B-S2-200L	071426	EP2B-S2-200LE
22211	2-3/16	071416	EP2B-S2-203L	071427	EP2B-S2-203LE
22213	2-7/16	071417	EP2B-S2-207L	071428	EP2B-S2-207LE
22215	2-11/16	071418	EP2B-S2-211L	071429	EP2B-S2-211LE
	2-15/16	071419	EP2B-S2-215L	071430	EP2B-S2-215LE
	3	071420	EP2B-S2-300L	071431	EP2B-S2-300LE
22218	3-7/16	071421	EP2B-S2-307L	071432	EP2B-S2-307LE

Shaft size	A	B #	C #	D		F bolt dia.	G #	H #	J	L	M	R	S	X total exp	Y	Z	Set screw size	S/S torque (in/lbs)
				Min.	Max.													
1-3/8	2.53	7.37	2.12	5.63	5.88	1/2	0.75	1.13	3.85	2.55	1.88	1.03	1.50	5/32	0.020	1.80	5/16-18	165
1-7/16																		
1-11/16	2.67	7.88	2.38	6.13	6.38	1/2	0.75	1.25	4.25	3.01	2.13	0.98	1.69	3/16	0.020	2.08	5/16-18	165
1-15/16	2.84	8.87	2.49	6.88	7.12	5/8	0.88	1.31	4.47	3.44	2.25	1.08	1.76	7/32	0.020	2.30	3/8-16	290
2																		
2-3/16	2.94	9.62	2.56	7.63	7.88	5/8	0.88	1.50	5.00	3.50	2.50	1.06	1.88	1/4	0.025	2.60	3/8-16	290
2-7/16	3.20	10.50	2.87	8.38	8.62	5/8	0.88	1.63	5.71	4.06	2.75	1.20	2.00	1/4	0.025	2.95	3/8-16	290
2-11/16	3.59	12.00	2.99	9.31	9.69	3/4	1.07	1.88	6.32	4.61	3.13	1.34	2.25	1/4	0.025	3.47	1/2-13	620
2-15/16																		
3																		
3-7/16	4.01	14.00	3.49	10.81	11.19	7/8	1.19	2.25	7.69	5.50	3.75	1.51	2.50	1/4	0.025	4.05	1/2-13	620

"A" and "R" dimensions do not include "Y" dimension.

Reference dimension only.

S-2000 pillow block – inch

4-bolt, E-dimensioned

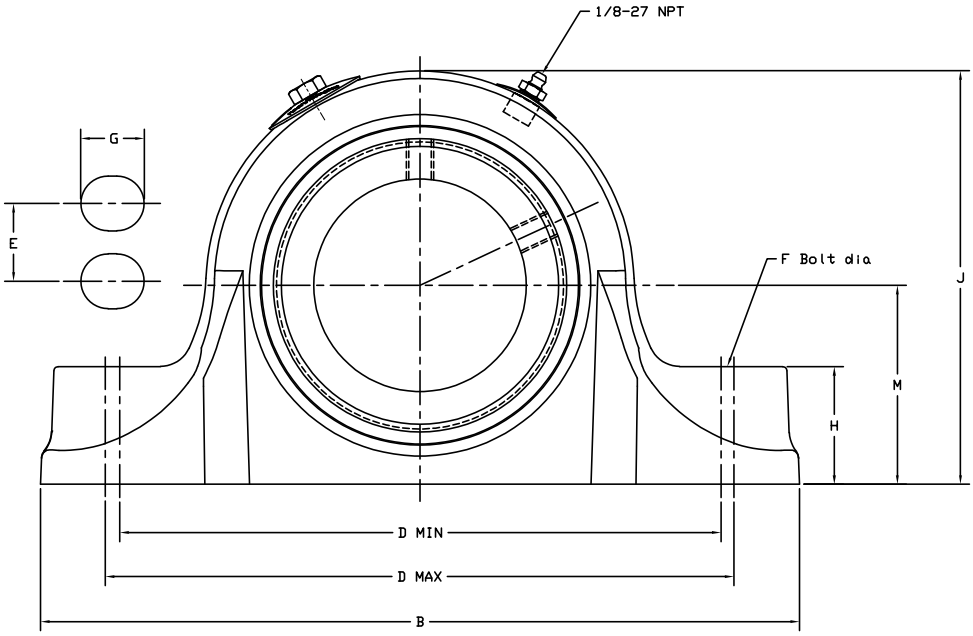

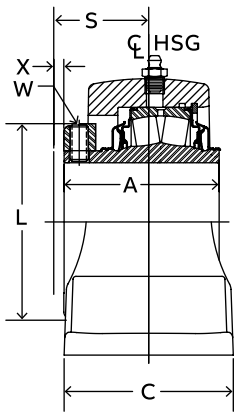

2-7/16 thru 3-15/16"
Construction

Expansion

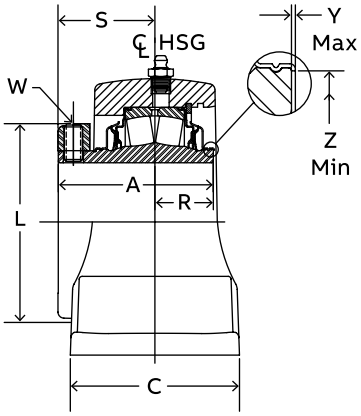

2-7/16 thru 3-15/16"
Construction

Non-Expansion

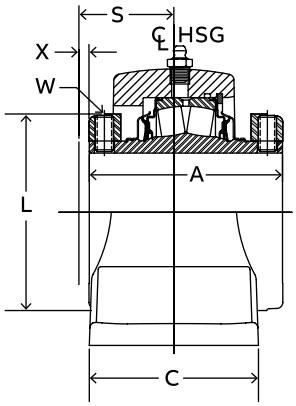

4-7/16 thru 4-15/16"
Construction

Expansion

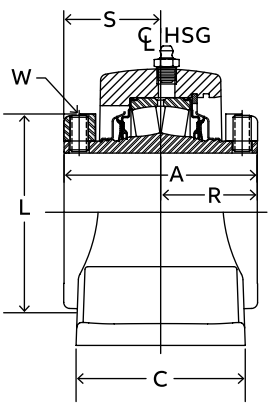

4-7/16 thru 4-15/16"
Construction

Non-Expansion

S-2000 pillow block – inch

4-bolt, E-dimensioned

Trident seal

Bearing series	Shaft size	Non-expansion		Expansion	
		Part number	Description	Part number	Description
22213	2-7/16	071433	EP4B-S2-207R	071441	EP4B-S2-207RE
	2-11/16	071434	EP4B-S2-211R	071442	EP4B-S2-211RE
22215	2-15/16	071435	EP4B-S2-215R	071443	EP4B-S2-215RE
	3	071436	EP4B-S2-300R	071444	EP4B-S2-300RE
22218	3-7/16	071437	EP4B-S2-307R	071445	EP4B-S2-307RE
22220	3-15/16	071438	EP4B-S2-315R	071446	EP4B-S2-315RE
22222	4-7/16	071439	EP4B-S2-407R	071447	EP4B-S2-407RE
22226	4-15/16	071440	EP4B-S2-415R	071448	EP4B-S2-415RE

Labyrinth seal

Bearing series	Shaft size	Non-expansion		Expansion	
		Part number	Description	Part number	Description
22213	2-7/16	071449	EP4B-S2-207L	071457	EP4B-S2-207LE
	2-11/16	071450	EP4B-S2-211L	071458	EP4B-S2-211LE
22215	2-15/16	071451	EP4B-S2-215L	071459	EP4B-S2-215LE
	3	071452	EP4B-S2-300L	071460	EP4B-S2-300LE
22218	3-7/16	071453	EP4B-S2-307L	071461	EP4B-S2-307LE
22220	3-15/16	071454	EP4B-S2-315L	071462	EP4B-S2-315LE
22222	4-7/16	071455	EP4B-S2-407L	071463	EP4B-S2-407LE
22226	4-15/16	071456	EP4B-S2-415L	071464	EP4B-S2-415LE

Shaft size	A	B #	C #	D		E	F bolt dia.	G #	H #	J #	L	M	R	S	X total exp	Y	Z	Set screw size	S/S torque (in/lbs)
				Min.	Max.														
2-7/16	3.20	10.50	3.49	8.31	8.69	1.87	5/8	0.87	1.63	5.72	4.06	2.75	1.20	2.00	1/4	0.025	2.94	3/8	290
2-11/16																			
2-15/16	3.59	12.00	4.00	9.18	9.82	2.13	5/8	1.00	1.88	6.33	4.61	3.13	1.34	2.25	1/4	0.025	3.47	1/2	620
3																			
3-7/16	4.01	13.50	4.49	10.75	11.25	2.37	3/4	1.13	2.25	7.69	5.50	3.75	1.51	2.50	1/4	0.025	4.05	1/2	620
3-15/16	4.47	15.25	4.50	12.25	12.75	2.25	3/4	1.13	2.44	8.70	6.00	4.25	1.34	3.13	5/16	0.025	4.50	5/8	1325
4-7/16	6.53	16.63	4.63	13.25	13.75	2.50	3/4	1.13	2.75	9.67	6.45	4.75	3.08	3.38	3/8	—	—	5/8	1325
4-15/16	6.91	18.50	5.13	15.25	15.75	2.87	7/8	1.25	3.00	11.16	7.45	5.50	3.29	3.62	3/8	—	—	5/8	1325

Notes: “A” and “R” dimensions do not include “Y” dimension.

Reference dimension only.

S-2000 pillow block – inch

2-bolt, steel (HD)

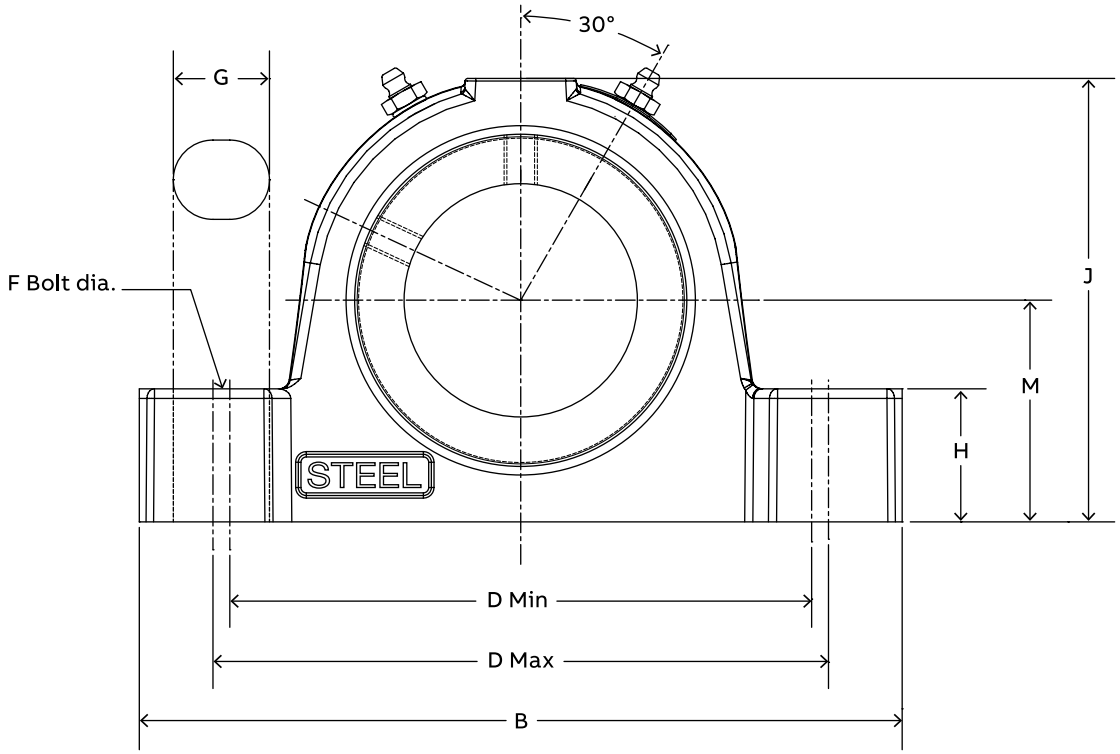

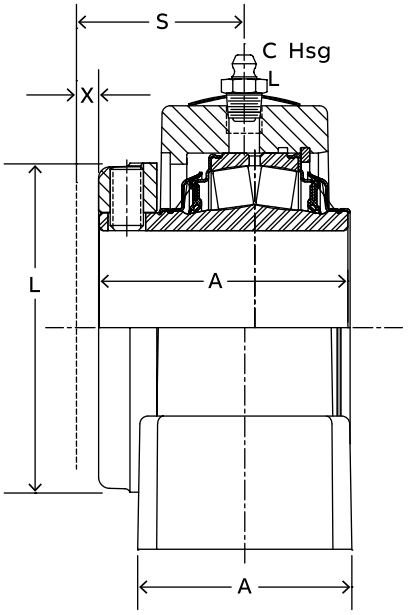

Expansion

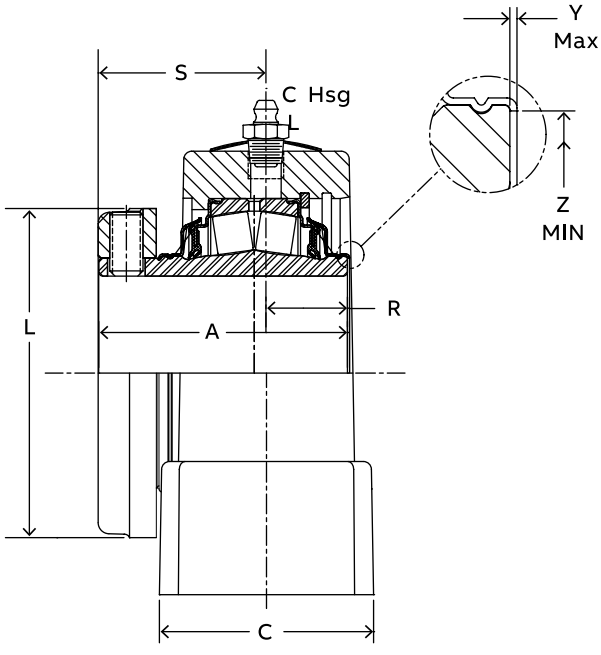

Non-Expansion

S-2000 pillow block – inch

2-bolt, steel (HD)

Non-expansion

Shaft size	Part number	Description
1-3/8	071790	SP2B-S2-106R
1-7/16	071791	SP2B-S2-107R
1-1/2	071792	SP2B-S2-108R
1-11/16	071793	SP2B-S2-111R
1-3/4	071794	SP2B-S2-112R
1-15/16	071795	SP2B-S2-115R
2	071796	SP2B-S2-200R
2-3/16	071797	SP2B-S2-203R
2-7/16	071798	SP2B-S2-207R
2-11/16	071799	SP2B-S2-211R
2-15/16	071800	SP2B-S2-215R
3	071801	SP2B-S2-300R
3-7/16	071802	SP2B-S2-307R
3-15/16	071803	SP2B-S2-315R

Expansion

Shaft size	Part number	Description
1-3/8	071804	SP2B-S2-106RE
1-7/16	071805	SP2B-S2-107RE
1-1/2	071806	SP2B-S2-108RE
1-11/16	071807	SP2B-S2-111RE
1-3/4	071808	SP2B-S2-112RE
1-15/16	071809	SP2B-S2-115RE
2	071810	SP2B-S2-200RE
2-3/16	071811	SP2B-S2-203RE
2-7/16	071812	SP2B-S2-207RE
2-11/16	071813	SP2B-S2-211RE
2-15/16	071814	SP2B-S2-215RE
3	071815	SP2B-S2-300RE
3-7/16	071816	SP2B-S2-307RE
3-15/16	071817	SP2B-S2-315RE

Shaft size	A	B	C	D		F bolt dia.	G	H	J	L	M	R	S	X total exp	Y	Z
				Min.	Max.											
1-3/8																
1-7/16	2.53	6.88	2.25	4.69	6.00	1/2	1.28	1.13	3.88	2.75	1.88	0.86	1.67	3/16	0.020	1.80
1-1/2																
1-11/16	2.67	7.13	2.37	5.25	5.75	1/2	0.88	1.25	4.27	3.19	2.13	0.91	1.76	1/4	0.020	2.08
1-3/4																
1-15/16	2.84	8.38	2.44	5.93	6.36	5/8	0.97	1.31	4.56	3.44	2.25	0.89	1.95	1/4	0.020	2.30
2																
2-3/16	2.94	8.88	2.50	6.50	7.00	5/8	1.04	1.50	5.00	3.75	2.50	0.99	1.95	1/4	0.025	2.59
2-7/16	3.00	9.25	2.90	6.81	7.43	5/8	1.07	1.63	5.60	4.06	2.75	1.17	2.03	1/4	0.025	2.94
2-11/16																
2-15/16	3.59	10.44	2.91	7.70	8.40	3/4	1.23	1.88	6.38	4.70	3.25	1.11	2.48	1/4	0.025	3.47
3																
3-7/16	4.02	13.00	3.41	9.25	10.75	7/8	1.75	2.25	7.50	5.50	3.75	1.43	2.61	1/4	0.025	4.05
3-15/16	4.47	14.25	3.89	10.04	12.6	1	2.40	2.44	8.37	6.00	4.25	1.59	2.91	5/16	0.025	4.50

"A" and "R" dimensions do not include "Y" dimension.

S-2000 pillow block – inch

4-bolt, steel (HD)

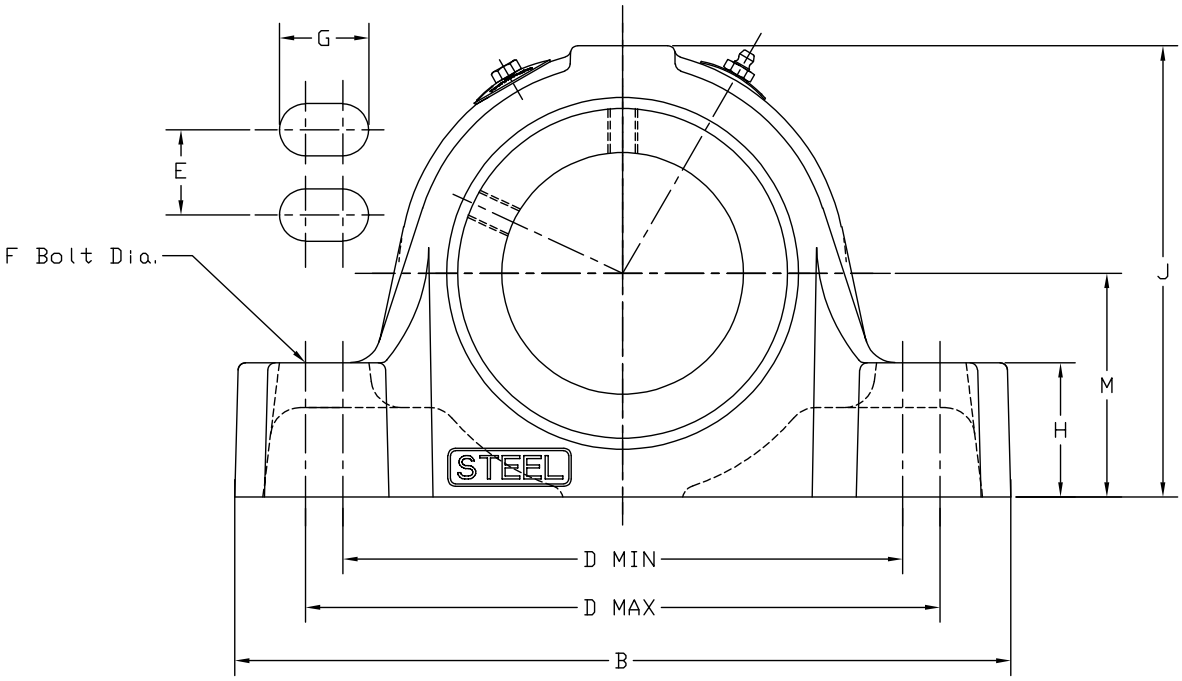

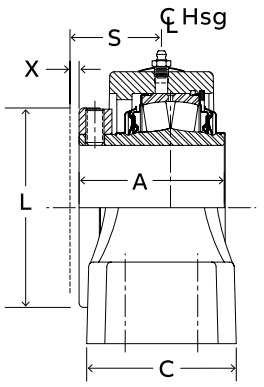

2-7/16 thru 3-7/16
Expansion

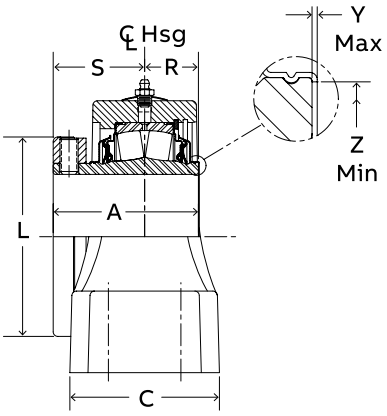

2-7/16 thru 3-7/16
Non-Expansion

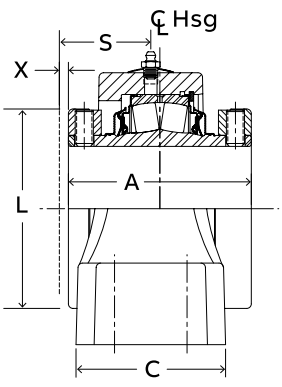

4-15/16
Expansion

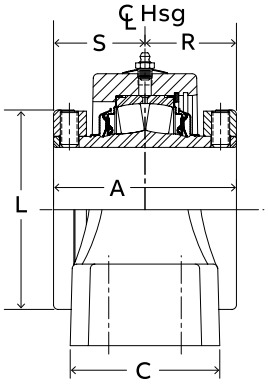

4-15/16
Non-Expansion

S-2000 pillow block – inch

4-bolt, steel (HD)

Non-expansion

Shaft size	Part number	Description
2-7/16	071821	SP4B-S2-207R
2-11/16	071822	SP4B-S2-211R
2-15/16	071823	SP4B-S2-215R
3	071824	SP4B-S2-300R
3-7/16	071825	SP4B-S2-307R
3-15/16	071826	SP4B-S2-315R
4-7/16	071827	SP4B-S2-407R
4-15/16	071828	SP4B-S2-415R

Expansion

Shaft size	Part number	Description
2-7/16	071832	SP4B-S2-207RE
2-11/16	071833	SP4B-S2-211RE
2-15/16	071834	SP4B-S2-215RE
3	071835	SP4B-S2-300RE
3-7/16	071836	SP4B-S2-307RE
3-15/16	071837	SP4B-S2-315RE
4-7/16	071838	SP4B-S2-407RE
4-15/16	071839	SP4B-S2-415RE

Shaft size	A	B	C	D		E	F bolt dia.	G	H	J	L	M	R	S	X total exp	Y	Z
				Min.	Max.												
2-7/16 2-11/16	3.20	9.25	3.00	6.88	7.63	1.75	1/2	1.06	1.63	5.61	4.06	2.75	1.19	2.90	1/4	0.025	2.94
2-15/16 3	3.59	10.44	3.13	7.60	9.10	1.88	5/8	1.43	1.88	6.44	4.70	3.00	1.14	2.46	1/4	0.025	3.47
3-7/16	4.02	12.30	3.75	8.88	10.88	2.00	3/4	1.88	2.25	7.56	5.50	3.75	1.48	2.54	1/4	0.025	4.05
3-15/16	4.47	14.88	4.31	10.88	13.38	2.25	3/4	2.13	2.44	8.70	6.00	4.25	1.25	3.22	5/16	0.025	4.50
4-7/16	6.53	16.13	4.75	11.88	14.5	2.50	3/4	2.19	2.75	9.67	6.45	4.75	2.87	3.66	3/8	0.036	5.00
4-15/16	6.91	17.50	5.03	15.13	15.88	2.75	7/8	1.37	3.00	11.12	7.45	5.50	3.35	3.56	3/8	0.036	5.84

"A" and "R" dimensions do not include "Y" dimension.

S-2000 pillow block – inch

2-bolt, E-dimensioned steel (HD)

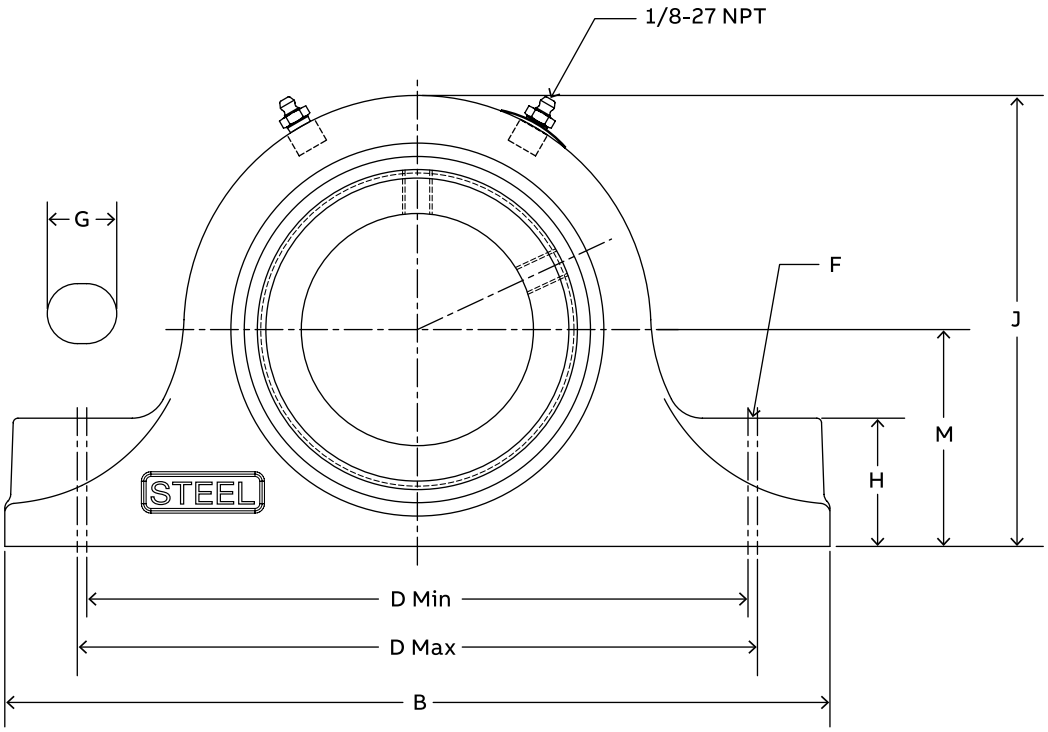

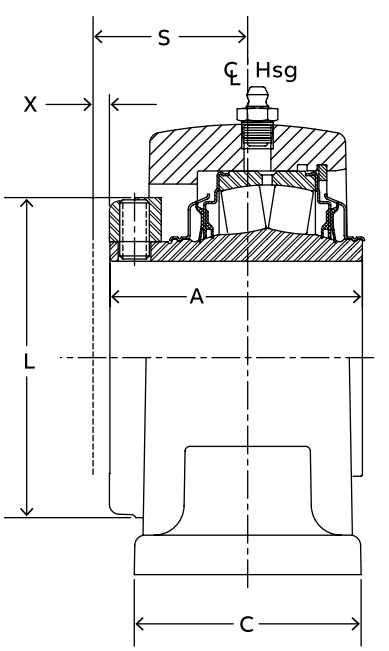

Expansion

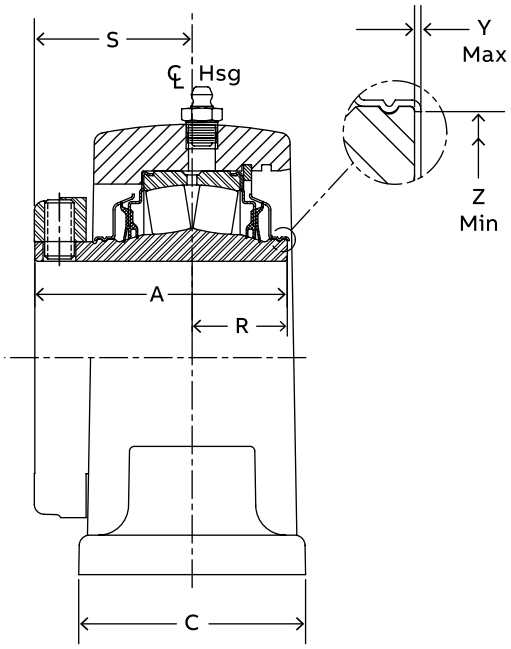

Non-Expansion

S-2000 pillow block – inch

2-bolt, E-dimensioned steel (HD)

Non-expansion*

Shaft size	Part number	Description
1-3/8	071940	SEP2B-S2-106R
1-7/16	071941	SEP2B-S2-107R
1-11/16	071942	SEP2B-S2-111R
1-15/16	071943	SEP2B-S2-115R
2	071944	SEP2B-S2-200R
2-3/16	071945	SEP2B-S2-203R
2-7/16	071946	SEP2B-S2-207R
2-11/16	071947	SEP2B-S2-211R
2-15/16	071948	SEP2B-S2-215R
3	071949	SEP2B-S2-300R
3-7/16	071950	SEP2B-S2-307R

Expansion

Shaft size	Part number	Description
1-3/8	071951	SEP2B-S2-106RE
1-7/16	071952	SEP2B-S2-107RE
1-11/16	071953	SEP2B-S2-111RE
1-15/16	071954	SEP2B-S2-115RE
2	071955	SEP2B-S2-200RE
2-3/16	071956	SEP2B-S2-203RE
2-7/16	071957	SEP2B-S2-207RE
2-11/16	071958	SEP2B-S2-211RE
2-15/16	071959	SEP2B-S2-215RE
3	071960	SEP2B-S2-300RE
3-7/16	071961	SEP2B-S2-307RE

Shaft size	A	B	C	D		F bolt dia.	G	H	J	L	M	R	S	X total exp	Y	Z	Set screw size	S/S torque (in/lbs)
				Min.	Max.													
1-3/8 1-7/16	2.53	6.88	2.25	4.69	5.88	1/2	1.22	1.13	3.84	2.55	1.88	1.03	1.50	5/32	0.020	1.80	5/16-18	165
1-11/16	2.67	7.88	2.38	5.70	6.50	1/2	1.02	1.25	4.26	3.01	2.13	0.98	1.69	3/16	0.020	2.08	5/16-18	165
1-15/16 2	2.84	8.88	2.44	6.00	7.12	5/8	1.32	1.31	4.47	3.26	2.25	1.08	1.76	7/32	0.020	2.30	3/8-16	290
2-3/16	2.94	9.63	2.50	6.50	7.88	5/8	1.45	1.50	5.00	3.50	2.50	1.06	1.88	1/4	0.025	2.60	3/8-16	290
2-7/16 2-11/16	3.20	10.25	2.90	6.88	8.62	5/8	1.63	1.63	5.71	3.86	2.75	1.20	2.00	1/4	0.025	2.95	3/8-16	290
2-15/16 3	3.59	11.63	2.91	7.88	9.62	3/4	1.75	1.88	6.32	4.61	3.13	1.34	2.25	1/4	0.025	3.47	1/2-13	620
3-7/16	4.01	13.50	3.41	9.38	11.25	7/8	1.94	2.25	7.69	5.50	3.75	1.51	2.50	1/4	0.025	4.05	1/2-13	620

"A" and "R" dimensions do not include "Y" dimension.

S-2000 pillow block – inch

4-bolt, E-dimensioned steel (HD)

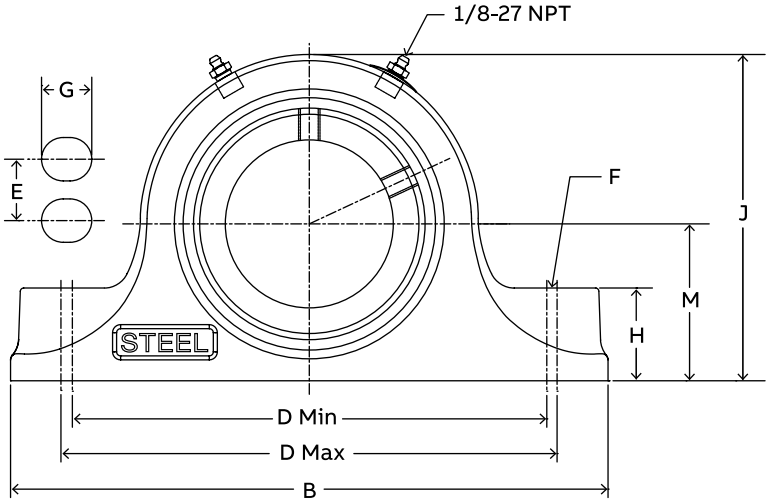

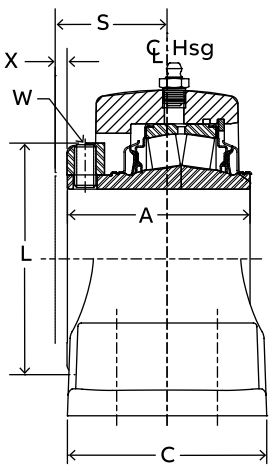

2-7/16 thru 3-15/16
Construction
Expansion

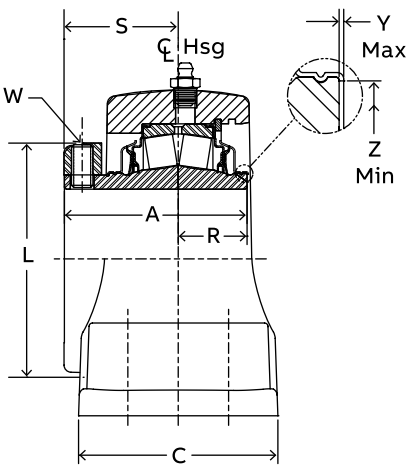

2-7/16 thru 3-15/16
Construction
Non-Expansion

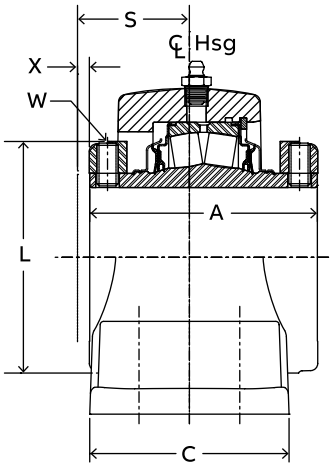

4-7/16 thru 4-15/16
Construction
Expansion

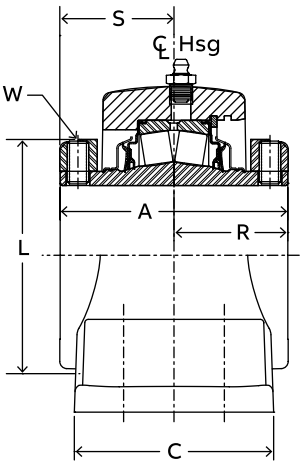

4-7/16 thru 4-15/16
Construction
Non-Expansion

S-2000 pillow block – inch

4-bolt, E-dimensioned steel (HD)

Non-expansion

Shaft size	Part number	Description
2-7/16	071962	SEP4B-S2-207R
2-11/16	071963	SEP4B-S2-211R
2-15/16	071964	SEP4B-S2-215R
3	071965	SEP4B-S2-300R
3-7/16	071966	SEP4B-S2-307R
3-15/16	071967	SEP4B-S2-315R
4-7/16	071968	SEP4B-S2-407R
4-15/16	071969	SEP4B-S2-415R

Expansion

Shaft size	Part number	Description
2-7/16	071970	SEP4B-S2-207RE
2-11/16	071971	SEP4B-S2-211RE
2-15/16	071972	SEP4B-S2-215RE
3	071973	SEP4B-S2-300RE
3-7/16	071974	SEP4B-S2-307RE
3-15/16	071975	SEP4B-S2-315RE
4-7/16	071976	SEP4B-S2-407RE
4-15/16	071977	SEP4B-S2-415RE

Shaft size	A	B	C	D		E	F bolt dia.	G	H	J	L	M	R	S	X total exp	Y	Z	Set screw size	S/S torque (in/lbs)
				Min.	Max.														
2-7/16	3.20	10.25	3.25	7.13	8.75	1.88	5/8	1.57	1.63	5.71	3.86	2.75	1.20	2.00	1/4	0.025	2.94	3/8	290
2-11/16																			
2-15/16	3.59	10.83	3.38	8.00	9.60	2.12	5/8	1.56	1.88	6.32	4.61	3.13	1.34	2.25	1/4	0.025	3.47	1/2	620
3																			
3-7/16	4.01	13.63	3.75	9.25	11.25	2.38	3/4	1.88	2.25	7.69	5.50	3.75	1.51	2.50	1/4	0.025	4.05	1/2	620
3-15/16	4.47	14.88	4.31	10.88	13.88	2.25	3/4	2.13	2.44	8.70	6.00	4.25	1.25	3.22	5/16	0.025	4.50	5/8	1325
4-7/16	6.53	16.13	4.75	11.88	14.50	2.50	3/4	2.19	2.75	9.67	6.45	4.75	2.87	3.66	3/8	0.036	5.00	5/8	1325
4-15/16	6.91	17.50	5.04	15.13	15.88	2.88	7/8	1.38	3.00	11.16	7.45	5.50	3.29	3.62	3/8	N/A	N/A	5/8	1325

"A" and "R" dimensions do not include "Y" dimension.

Reference dimension only.

S-2000 round flange – inch

3- and 4-bolt

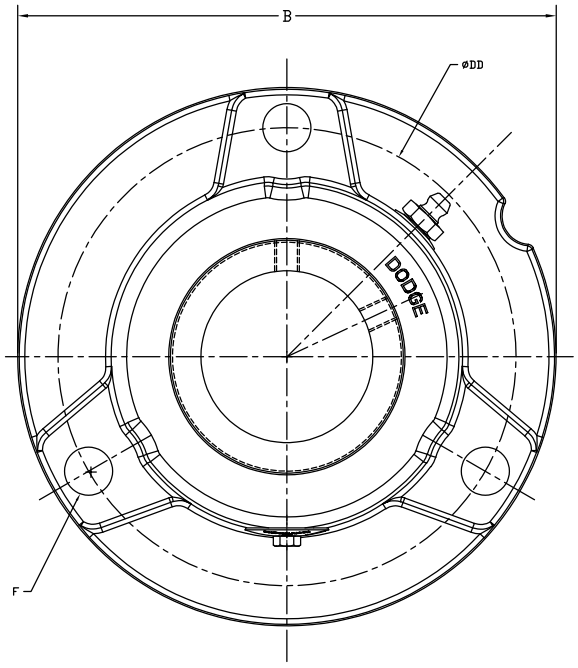

1-3/8" thru 1-1/2"
CONSTRUCTION

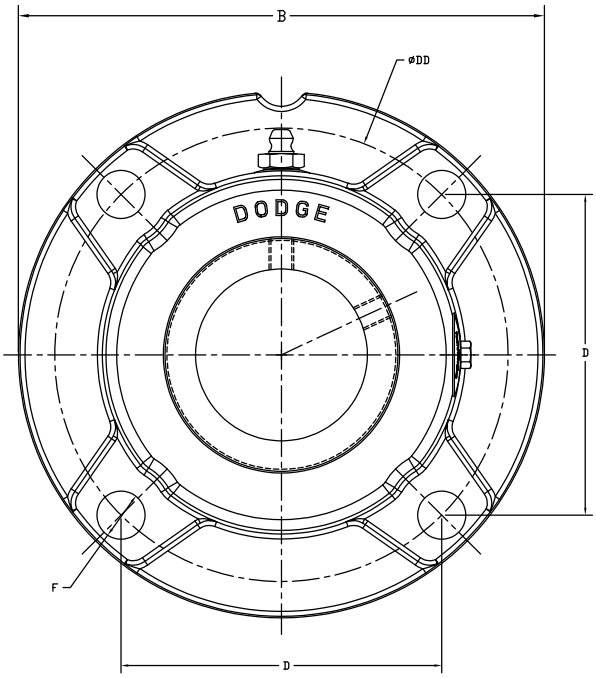

1-11/16" thru 3"
CONSTRUCTION

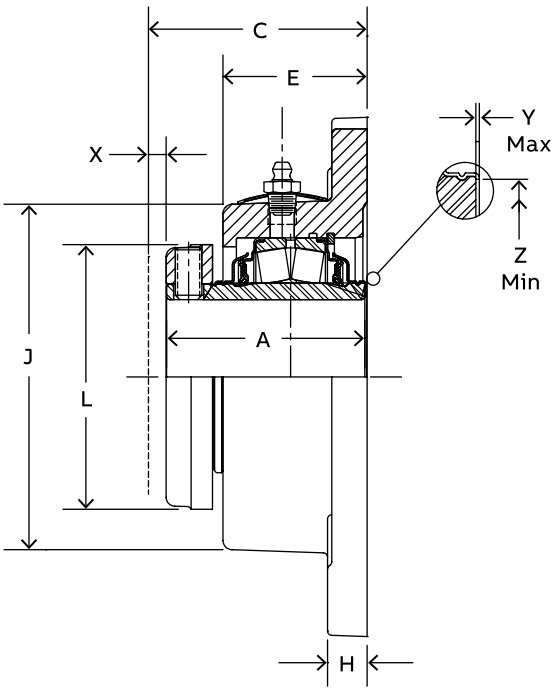

Expansion

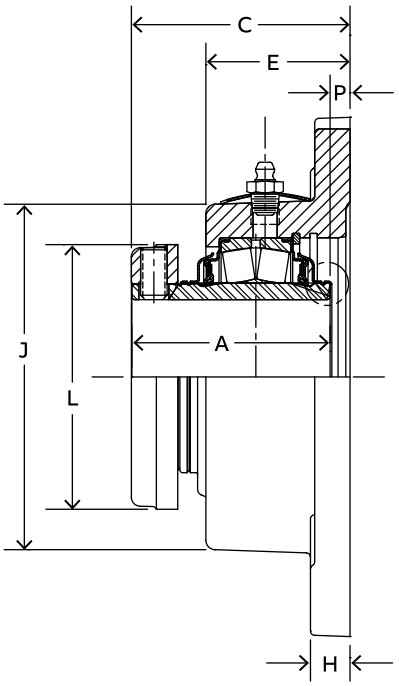

Non-Expansion

S-2000 round flange – inch

3- and 4-bolt

Trident seal

Bearing series	Shaft size	Non-expansion		Expansion	
		Part number	Description	Part number	Description
22208	1-3/8	070436	F3R-S2-106R	070470	F3R-S2-106RE
	1-7/16	070437	F3R-S2-107R	070471	F3R-S2-107RE
	1-1/2	070438	F3R-S2-108R	070472	F3R-S2-108RE
22209	1-11/16	070440	F4R-S2-111R	070474	F4R-S2-111RE
	1-3/4	070441	F4R-S2-112R	070475	F4R-S2-112RE
22210	1-15/16	070442	F4R-S2-115R	070476	F4R-S2-115RE
	2	070443	F4R-S2-200R	070477	F4R-S2-200RE
22211	2-3/16	070444	F4R-S2-203R	070478	F4R-S2-203RE
22213	2-7/16	070446	F4R-S2-207R	070480	F4R-S2-207RE
22215	2-11/16	070448	F4R-S2-211R	070482	F4R-S2-211RE
	2-15/16	070449	F4R-S2-215R	070483	F4R-S2-215RE
	3	070450	F4R-S2-300R	070484	F4R-S2-300RE

Labyrinth seal

Bearing series	Shaft size	Non-expansion		Expansion	
		Part number	Description	Part number	Description
22208	1-3/8	070491	F3R-S2-106L	070523	F3R-S2-106LE
	1-7/16	070492	F3R-S2-107L	070524	F3R-S2-107LE
	1-1/2	070493	F3R-S2-108L	070525	F3R-S2-108LE
22209	1-11/16	070495	F4R-S2-111L	070527	F4R-S2-111LE
	1-3/4	070496	F4R-S2-112L	070528	F4R-S2-112LE
22210	1-15/16	070497	F4R-S2-115L	070529	F4R-S2-115LE
	2	070498	F4R-S2-200L	070530	F4R-S2-200LE
22211	2 - 3/16	070499	F4R-S2-203L	070531	F4R-S2-203LE
22213	2-7/16	070501	F4R-S2-207L	070533	F4R-S2-207LE
22215	2-11/16	070503	F4R-S2-211L	070535	F4R-S2-211LE
	2-15/16	070504	F4R-S2-215L	070536	F4R-S2-215LE
	3	070505	F4R-S2-300L	070537	F4R-S2-300LE

Shaft size	A	B	C	D	DD	E	F bolt dia.	H	J	L	P	X total exp	Y	Z
1-3/8														
1-7/16	2.53	5.88	2.77	3.53	5.00	1.80	1/2*	0.50	3.84	2.75	0.23	3/16	0.020	1.80
1-1/2														
1-11/16	2.67	6.38	2.97	3.89	5.50	1.89	1/2**	0.50	4.34	3.19	0.30	1/4	0.020	2.08
1-3/4														
1-15/16	2.84	6.69	3.14	4.06	5.75	1.92	1/2**	0.56	4.59	3.44	0.30	1/4	0.020	2.30
2														
2-3/16	2.94	7.38	3.23	4.50	6.38	2.05	5/8**	0.56	4.98	3.75	0.30	1/4	0.025	2.60
2-7/16	3.20	7.75	3.50	4.77	6.75	2.38	5/8**	0.77	5.50	406	0.30	1/4	0.025	2.95
2-11/16														
2-15/16	3.59	9.25	3.89	5.56	7.88	2.39	3/4**	0.88	6.36	4.70	0.30	1/4	0.025	3.47
3														

* 3 equally spaced bolt holes.

** 4 equally spaced bolt holes.

S-2000 square flange – inch

4-bolt

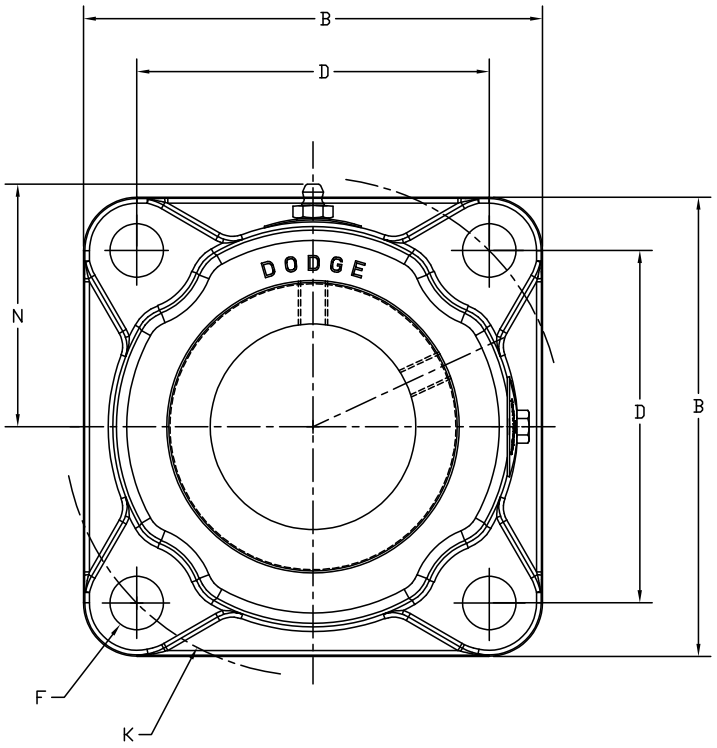

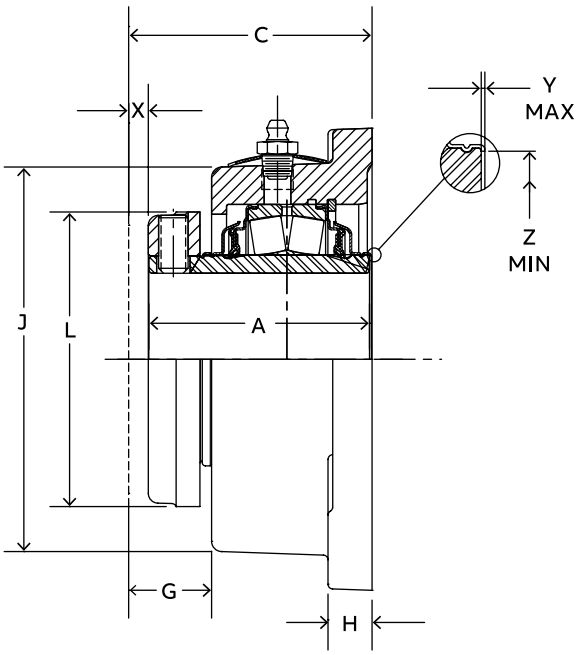

Expansion

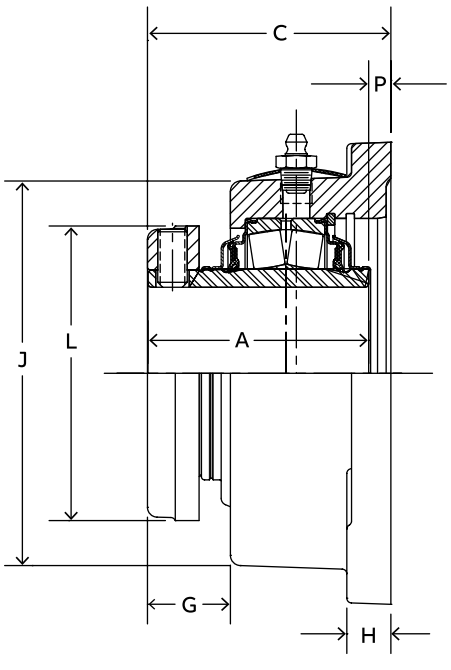

Non-Expansion

S-2000 square flange – inch

4-bolt

Trident seal

Bearing series	Shaft size	Non-expansion		Expansion	
		Part number	Description	Part number	Description
22208	1-3/8	070541	F4S-S2-106R	070564	F4S-S2-106RE
	1-7/16	070542	F4S-S2-107R	070565	F4S-S2-107RE
	1-1/2	070543	F4S-S2-108R	070566	F4S-S2-108RE
22209	1-11/16	070545	F4S-S2-111R	070568	F4S-S2-111RE
	1-3/4	070546	F4S-S2-112R	070569	F4S-S2-112RE
22210	1-15/16	070547	F4S-S2-115R	070570	F4S-S2-115RE
	2	070548	F4S-S2-200R	070571	F4S-S2-200RE
22211	2-3/16	070549	F4S-S2-203R	070572	F4S-S2-203RE
22213	2-7/16	070551	F4S-S2-207R	070574	F4S-S2-207RE
22215	2-11/16	070553	F4S-S2-211R	070576	F4S-S2-211RE
	2-15/16	070554	F4S-S2-215R	070577	F4S-S2-215RE
	3	070555	F4S-S2-300R	070578	F4S-S2-300RE
22218	3-7/16	070557	F4S-S2-307R	070580	F4S-S2-307RE
22220	3-15/16	070559	F4S-S2-315R	070582	F4S-S2-315RE

Labyrinth seal

Bearing series	Shaft size	Non-expansion		Expansion	
		Part number	Description	Part number	Description
22208	1-3/8	070600	F4S-S2-106L	070853	F4S-S2-106LE
	1-7/16	070601	F4S-S2-107L	070854	F4S-S2-107LE
	1-1/2	070602	F4S-S2-108L	070855	F4S-S2-108LE
22209	1-11/16	070604	F4S-S2-111L	070857	F4S-S2-111LE
	1-3/4	070605	F4S-S2-112L	070858	F4S-S2-112LE
22210	1-15/16	070606	F4S-S2-115L	070859	F4S-S2-115LE
	2	070607	F4S-S2-200L	070860	F4S-S2-200LE
22211	2-3/16	070608	F4S-S2-203L	070861	F4S-S2-203LE
22213	2-7/16	070610	F4S-S2-207L	070863	F4S-S2-207LE
22215	2-11/16	070612	F4S-S2-211L	070865	F4S-S2-211LE
	2-15/16	070613	F4S-S2-215L	070866	F4S-S2-215LE
	3	070614	F4S-S2-300L	070867	F4S-S2-300LE
22218	3-7/16	070616	F4S-S2-307L	070869	F4S-S2-307LE
22220	3-15/16	070618	F4S-S2-315L	070871	F4S-S2-315LE

Shaft size	A	B	C	D	F bolt dia.	G	H	J	K	L	N	P	X total exp	Y	Z
1-3/8															
1-7/16	2.53	4.75	2.77	3.53	1/2	0.99	0.50	3.81	5.00	2.75	2.48	0.23	3/16	0.020	1.80
1-1/2															
1-11/16	2.67	5.13	2.97	3.89	1/2	1.08	0.50	4.41	5.50	3.19	2.78	0.30	1/4	0.020	2.08
1-3/4															
1-15/16	2.84	5.30	3.16	4.06	1/2	1.23	0.56	4.97	5.75	3.44	2.91	0.31	1/4	0.020	2.30
2															
2-3/16	2.94	5.88	3.25	4.52	5/8	1.20	0.56	5.02	6.38	3.75	3.09	0.31	1/4	0.025	2.60
2-7/16	3.20	6.13	3.52	4.78	5/8	1.14	0.64	5.63	6.75	4.06	3.41	0.31	1/4	0.025	2.95
2-11/16															
2-15/16	3.59	7.19	3.91	5.56	3/4	1.52	0.75	6.50	7.88	4.70	3.84	0.31	1/4	0.025	3.47
3															
3-7/16	4.00	8.25	4.31	6.72	3/4	1.44	0.94	7.48	9.50	5.50	4.33	0.31	1/4	0.025	4.05
3-15/16	4.47	9.25	4.84	7.61	7/8	1.55	1.06	8.22	10.75	6.00	4.70	0.38	5/16	0.025	4.50

S-2000 square flange – inch

4-bolt, E-dimensioned

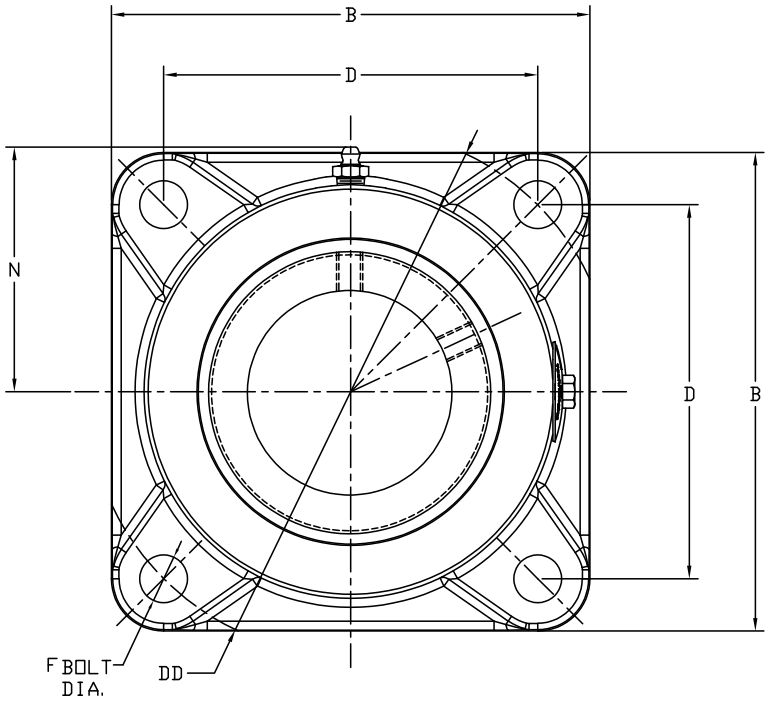

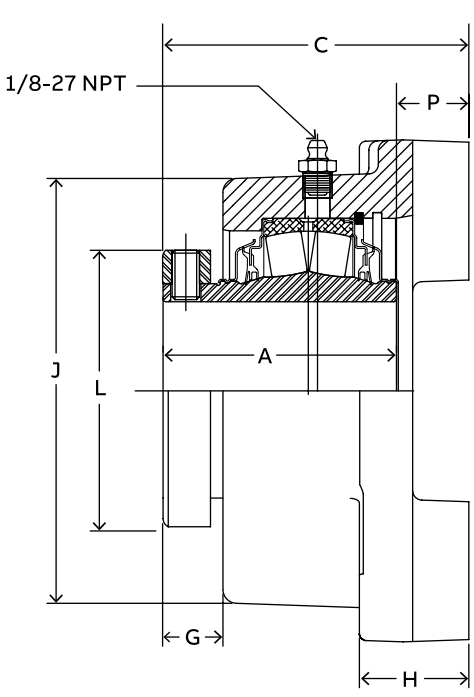

Non-Expansion

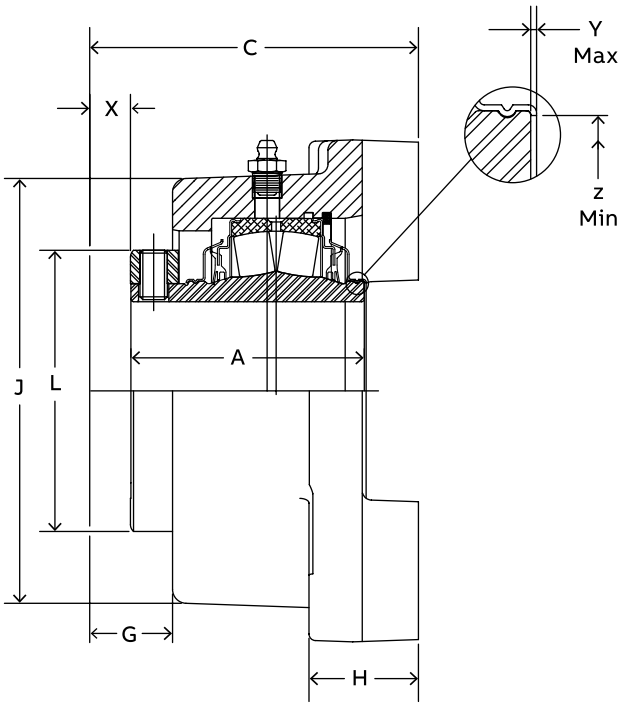

Expansion

S-2000 square flange – inch

4-bolt, E-dimensioned

Trident seal

Bearing series	Shaft size	Non-expansion		Expansion	
		Part number	Description	Part number	Description
22208	1-3/8	071469	EF4B-S2-106R	071482	EF4B-S2-106RE
	1-7/16	071470	EF4B-S2-107R	071483	EF4B-S2-107RE
22209	1-11/16	071471	EF4B-S2-111R	071484	EF4B-S2-111RE
22210	1-15/16	071472	EF4B-S2-115R	071485	EF4B-S2-115RE
	2	071473	EF4B-S2-200R	071486	EF4B-S2-200RE
22211	2-3/16	071474	EF4B-S2-203R	071487	EF4B-S2-203RE
22213	2-7/16	071475	EF4B-S2-207R	071488	EF4B-S2-207RE
	2-11/16	071476	EF4B-S2-211R	071489	EF4B-S2-211RE
22215	2-15/16	071477	EF4B-S2-215R	071490	EF4B-S2-215RE
	3	071478	EF4B-S2-300R	071491	EF4B-S2-300RE
22218	3-7/16	071479	EF4B-S2-307R	071492	EF4B-S2-307RE
22220	3-15/16	071480	EF4B-S2-315R	071493	EF4B-S2-315RE
22222	4-7/16	071481	EF4B-S2-407R	071494	EF4B-S2-407RE

Labyrinth seal

Bearing series	Shaft size	Non-expansion		Expansion	
		Part number	Description	Part number	Description
22208	1-3/8	071495	EF4B-S2-106L	071508	EF4B-S2-106LE
	1-7/16	071496	EF4B-S2-107L	071509	EF4B-S2-107LE
22209	1-11/16	071497	EF4B-S2-111L	071510	EF4B-S2-111LE
22210	1-15/16	071498	EF4B-S2-115L	071511	EF4B-S2-115LE
	2	071499	EF4B-S2-200L	071512	EF4B-S2-200LE
22211	2-3/16	071500	EF4B-S2-203L	071513	EF4B-S2-203LE
22213	2-7/16	071501	EF4B-S2-207L	071514	EF4B-S2-207LE
	2-11/16	071502	EF4B-S2-211L	071515	EF4B-S2-211LE
22215	2-15/16	071503	EF4B-S2-215L	071516	EF4B-S2-215LE
	3	071504	EF4B-S2-300L	071517	EF4B-S2-300LE
22218	3-7/16	071505	EF4B-S2-307L	071518	EF4B-S2-307LE
22220	3-15/16	071506	EF4B-S2-315L	071519	EF4B-S2-315LE
22222	4-7/16	071507	EF4B-S2-407L	071520	EF4B-S2-407LE

Shaft size	A	B #	C #	D	DD	F bolt dia.	G	H #	J #	L	N	P	X total exp	Y	Z	Set screw size	S/S torque (in/lbs)
1-3/8	2.53	4.62	3.06	3.50	4.95	1/2	0.57	1.06	3.88	2.55	2.34	0.53	5/32	0.020	1.80	5/16-18	165
1-7/16																	
1-11/16	2.67	5.37	3.50	4.13	5.83	1/2	0.53	1.19	4.18	3.01	2.51	0.84	3/16	0.020	2.08	5/16-18	165
1-15/16	2.84	5.62	3.63	4.37	6.19	1/2	0.65	1.18	4.36	3.44	2.60	0.78	7/32	0.020	2.30	3/8-16	290
2																	
2-3/16	2.94	6.25	3.87	4.87	6.89	5/8	0.60	1.38	4.88	3.50	2.88	0.93	1/4	0.025	2.60	3/8-16	290
2-7/16	3.20	6.88	4.19	5.37	7.60	5/8	0.83	1.50	5.81	4.06	3.32	0.98	1/4	0.025	2.95	3/8-16	290
2-11/16	3.59	7.76	4.69	6.00	8.49	3/4	0.88	1.61	6.30	4.61	3.58	1.09	1/4	0.025	3.47	1/2-13	620
2-15/16																	
3																	
3-7/16	4.01	9.25	5.25	7.00	9.90	3/4	0.96	1.87	7.44	5.50	4.15	1.24	1/4	0.025	4.05	1/2-13	620
3-15/16	4.48	10.25	6.50	7.75	10.96	7/8	1.00	2.12	8.27	6.00	4.58	2.02	5/16	0.025	4.50	5/8-11	1325
4-7/16	6.53	10.88	7.10	8.75	12.37	7/8	1.39	2.43	9.13	6.45	5.01	0.56	3/8	—	—	5/8-11	1325

Notes: "P" dimension is for the non-expansion only.

"A" and "R" dimensions do not include "Y" dimension.

Reference dimension only.

S-2000 square flange – inch

4-bolt, steel (HD)

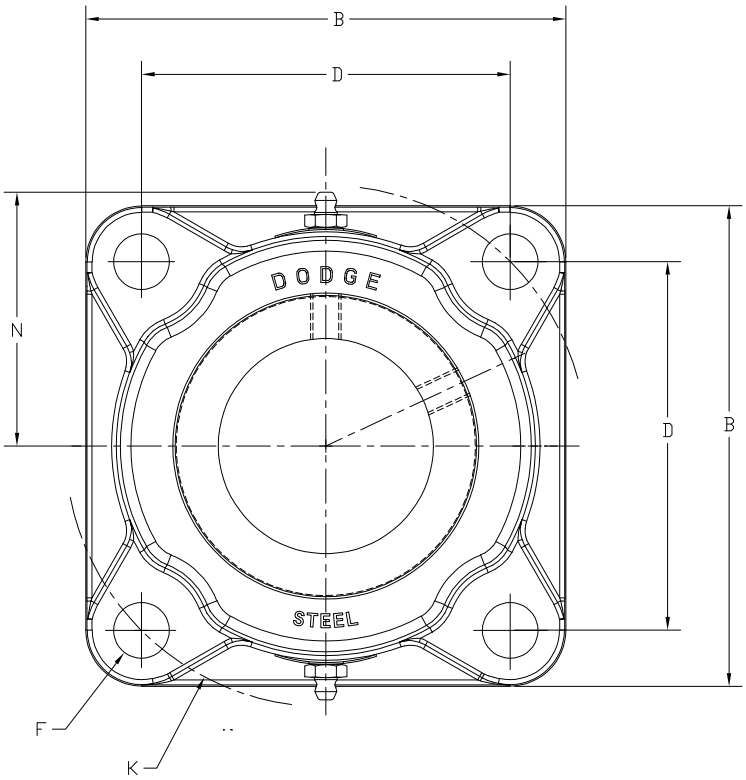

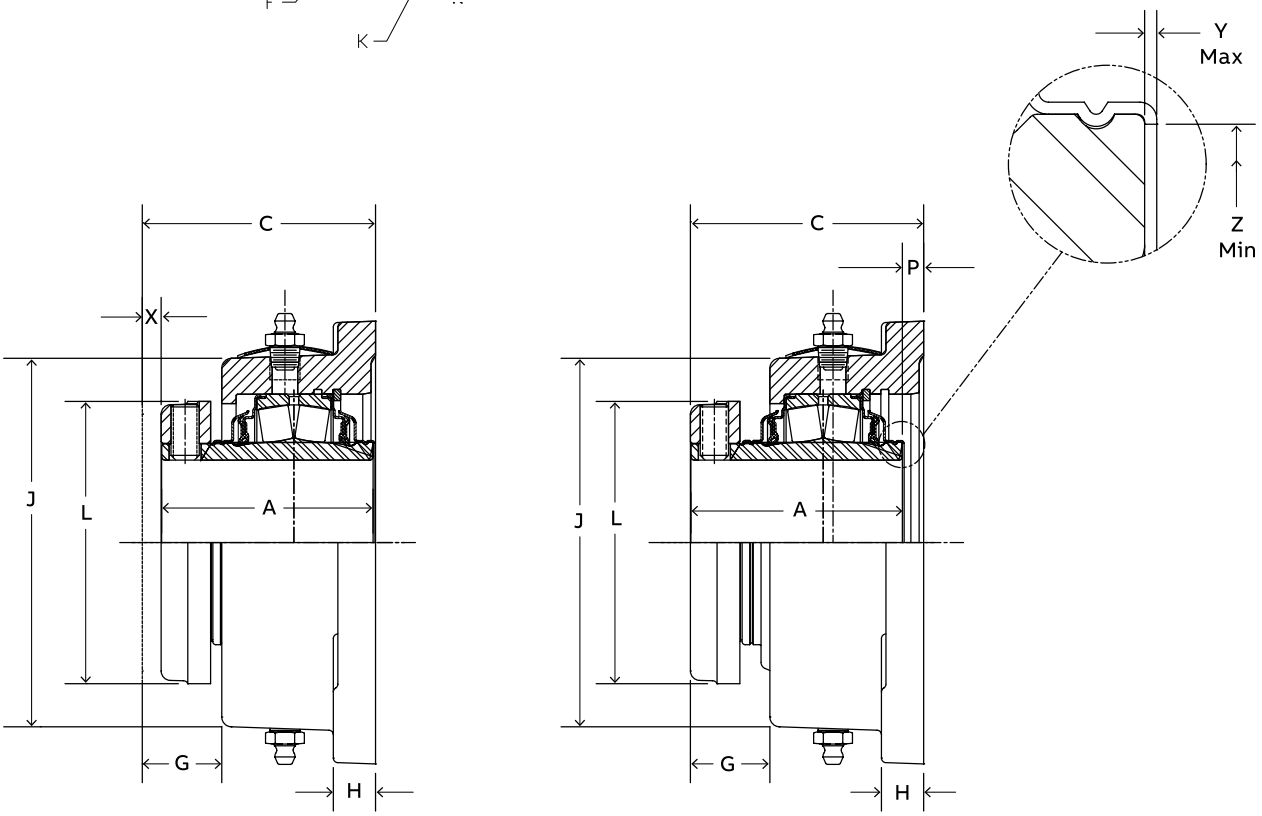

Expansion

Non-Expansion

S-2000 square flange – inch

4-bolt, steel (HD)

Non-expansion

Shaft size	Part number	Description
1-3/8	072386	SF4S-S2-106R
1-7/16	072387	SF4S-S2-107R
1-1/2	072388	SF4S-S2-108R
1-11/16	072389	SF4S-S2-111R
1-3/4	072390	SF4S-S2-112R
1-15/16	072391	SF4S-S2-115R
2	072392	SF4S-S2-200R
2-3/16	072393	SF4S-S2-203R
2-7/16	072394	SF4S-S2-207R
2-11/16	072395	SF4S-S2-211R
2-15/16	072396	SF4S-S2-215R
3	072397	SF4S-S2-300R
3-7/16	072398	SF4S-S2-307R
3-15/16	072399	SF4S-S2-315R

Expansion

Shaft size	Part number	Description
1-3/8	072400	SF4S-S2-106RE
1-7/16	072401	SF4S-S2-107RE
1-1/2	072402	SF4S-S2-108RE
1-11/16	072403	SF4S-S2-111RE
1-3/4	072404	SF4S-S2-112RE
1-15/16	072405	SF4S-S2-115RE
2	072406	SF4S-S2-200RE
2-3/16	072407	SF4S-S2-203RE
2-7/16	072408	SF4S-S2-207RE
2-11/16	072409	SF4S-S2-211RE
2-15/16	072410	SF4S-S2-215RE
3	072411	SF4S-S2-300RE
3-7/16	072412	SF4S-S2-307RE
3-15/16	072413	SF4S-S2-315RE

Shaft size	A	B	C	D	F bolt dia.	G	H	J	K	L	N	P	X total exp	Y	Z
1-3/8															
1-7/16	2.53	4.62	2.77	3.54	1/2	0.76	0.88	3.70	5.00	2.75	2.25	0.24	3/16	0.02	1.80
1-1/2															
1-11/16	2.67	5.37	2.87	3.89	1/2	0.77	0.88	4.41	5.50	3.19	2.62	0.20	1/4	0.02	2.08
1-3/4															
1-15/16	2.84	5.18	3.16	4.07	1/2	0.91	0.91	4.66	5.75	3.44	2.75	0.32	1/4	0.02	2.30
2															
2-3/16	2.94	5.87	3.16	4.51	5/8	0.83	0.75	5.03	6.38	3.75	2.93	0.22	1/4	0.02	2.59
2-7/16	3.20	6.18	3.34	4.77	5/8	0.72	1.00	5.63	6.75	4.06	3.23	0.14	1/4	0.025	2.94
2-11/16															
2-15/16	3.59	7.18	3.87	5.57	3/4	1.04	1.06	6.51	7.88	4.70	3.75	0.28	1/4	0.025	3.47
3															
3-7/16	4.00	8.37	4.11	6.72	3/4	0.78	1.28	7.49	9.50	5.50	4.17	0.11	1/4	0.025	4.05
3-15/16	4.48	9.49	4.84	7.60	1	0.85	1.50	8.22	10.75	6.00	4.68	0.36	5/32	0.025	4.50

"P" dimension is for non-expansion only.

"A" and "P" dimensions do not include "Y" dimension.

S-2000 piloted flange – inch

4-bolt

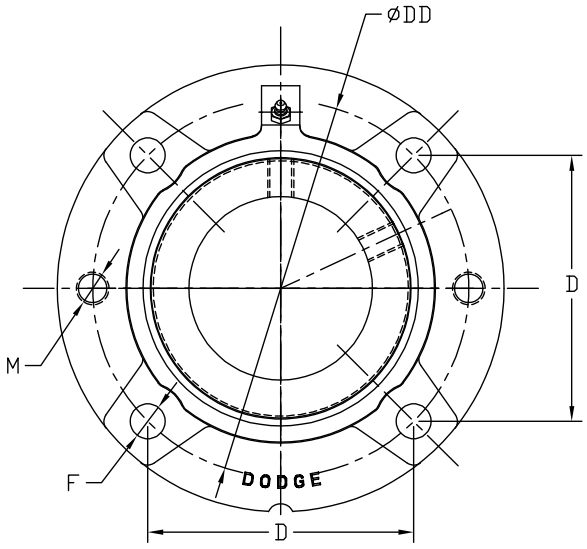

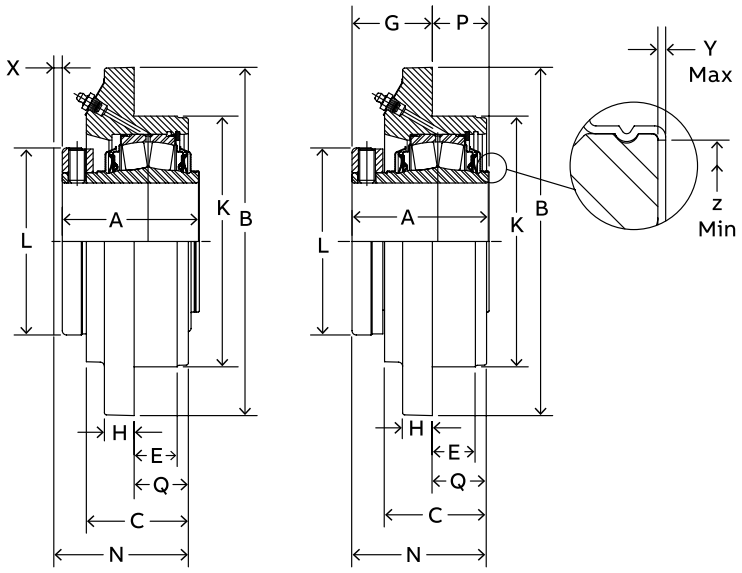

Expansion

Non-Expansion

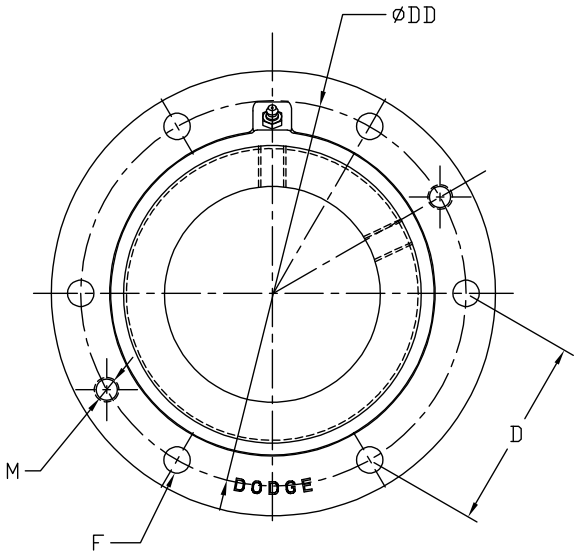

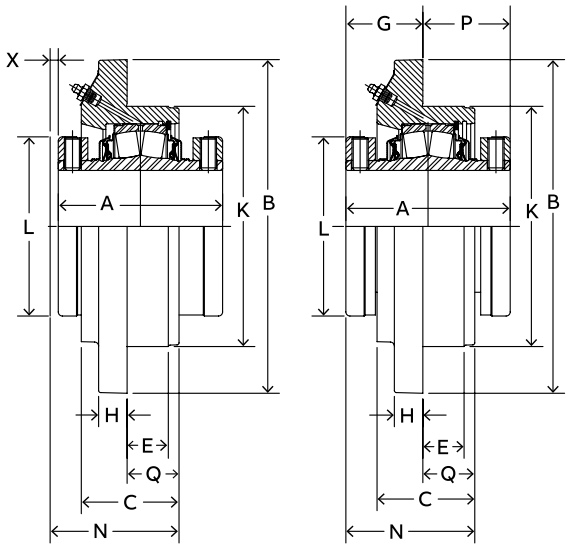

4-7/16 & 4-15/16 Construction

Expansion

4-7/16 & 4-15/16 Construction

Non-Expansion

S-2000 piloted flange – inch

4-bolt

Trident seal

Bearing series	Shaft size	Non-expansion		Expansion	
		Part number	Description	Part number	Description
22208	1-3/8	070644	FC-S2-106R	070671	FC-S2-106RE
	1-7/16	070645	FC-S2-107R	070672	FC-S2-107RE
	1-1/2	070646	FC-S2-108R	070673	FC-S2-108RE
22209	1-11/16	070648	FC-S2-111R	070675	FC-S2-111RE
	1-3/4	070649	FC-S2-112R	070676	FC-S2-112RE
22210	1-15/16	070650	FC-S2-115R	070677	FC-S2-115RE
	2	070651	FC-S2-200R	070678	FC-S2-200RE
22211	2-3/16	070652	FC-S2-203R	070679	FC-S2-203RE
22213	2-7/16	070654	FC-S2-207R	070681	FC-S2-207RE
22215	2-11/16	070656	FC-S2-211R	070683	FC-S2-211RE
	2-15/16	070657	FC-S2-215R	070684	FC-S2-215RE
	3	070658	FC-S2-300R	070685	FC-S2-300RE
22218	3-7/16	070660	FC-S2-307R	070687	FC-S2-307RE
22220	3-15/16	070662	FC-S2-315R	070689	FC-S2-315RE
22222	4-7/16 **	070664	FC-S2-407R	070691	FC-S2-407RE
22226	4-15/16 **	070666	FC-S2-415R	070693	FC-S2-415RE

Labyrinth seal

Bearing series	Shaft size	Non-expansion		Expansion	
		Part number	Description	Part number	Description
22208	1-3/8	070698	FC-S2-106L	070725	FC-S2-106LE
	1-7/16	070699	FC-S2-107L	070726	FC-S2-107LE
	1-1/2	070700	FC-S2-108L	070727	FC-S2-108LE
22209	1-11/16	070702	FC-S2-111L	070729	FC-S2-111LE
	1-3/4	070703	FC-S2-112L	070730	FC-S2-112LE
22210	1-15/16	070704	FC-S2-115L	070731	FC-S2-115LE
	2	070705	FC-S2-200L	070732	FC-S2-200LE
22211	2-3/16	070706	FC-S2-203L	070733	FC-S2-203LE
22213	2-7/16	070708	FC-S2-207L	070735	FC-S2-207LE
22215	2-11/16	070710	FC-S2-211L	070737	FC-S2-211LE
	2-15/16	070711	FC-S2-215L	070738	FC-S2-215LE
	3	070712	FC-S2-300L	070739	FC-S2-300LE
22218	3-7/16	070714	FC-S2-307L	070741	FC-S2-307LE
22220	3-15/16	070716	FC-S2-315L	070743	FC-S2-315LE
22222	4-7/16 **	070718	FC-S2-407L	070745	FC-S2-407LE
22226	4-15/16 **	070720	FC-S2-415L	070747	FC-S2-415LE

Shaft size	A	B	C	D	DD	E	F bolt dia.	G	H	K*	L	M	N	P	Q	X total exp	Y	Z
1-3/8																		
1-7/16	2.53	5.25	1.84	3.09	4.38	0.75	3/8	1.31	0.50	3.63	2.75	3/8-16	2.55	1.22	1.22	3/16	0.020	1.80
1-1/2																		
1-11/16	2.67	6.13	1.91	3.63	5.13	0.88	7/16	1.45	0.50	4.25	3.19	7/16-14	2.72	1.22	1.27	1/4	0.020	2.08
1-3/4																		
1-15/16	2.84	6.38	2.00	3.80	5.38	0.88	7/16	1.59	0.56	4.50	3.44	7/16-14	2.86	1.25	1.27	1/4	0.020	2.30
2																		
2-3/16	2.94	7.13	2.19	4.25	6.00	1.00	1/2	1.56	0.56	5.00	3.75	1/2-13	2.98	1.38	1.42	1/4	0.025	2.59
2-7/16	3.20	7.63	2.50	4.59	6.50	1.00	1/2	1.64	0.63	5.50	4.06	1/2-13	3.20	1.56	1.56	1/4	0.025	2.94
2-11/16																		
2-15/16	3.59	8.75	2.63	5.30	7.50	1.25	5/8	2.03	0.75	6.38	4.70	5/8-11	3.64	1.56	1.63	1/4	0.025	3.47
3																		
3-7/16	4.00	10.25	3.00	6.09	8.63	1.27	3/4	2.36	0.94	7.38	5.50	3/4-10	3.88	1.64	1.52	1/4	0.025	4.05
3-15/16	4.47	10.88	3.50	6.63	9.38	1.47	3/4	2.66	1.13	8.13	6.00	3/4-10	4.56	1-31	1.91	5/16	0.025	4.50
4-7/16	6.53	13.58	4.00	5.88	11.75	1.45	3/4**	3.53	1.00	10.25	6.45	3/4-10	5.50	3.00	1.98	3/8	—	—
4-15/16	6.91	14.84	4.38	6.38	12.75	1.70	7/8**	3.44	1.25	11.00	7.45	7/8-9	5.86	3.47	2.42	3/8	—	—

* Pilot diameter tolerance = +0.000", -0.002"

** Housing utilize 6 bolts equally spaced.

S-2000 piloted flange – inch

4-bolt, E-dimensioned

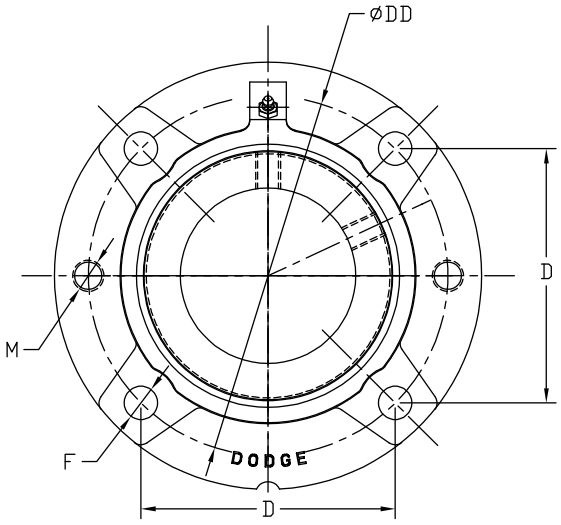

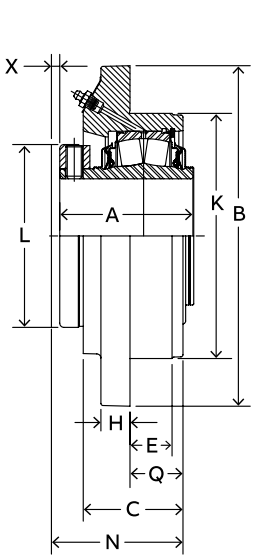

Expansion

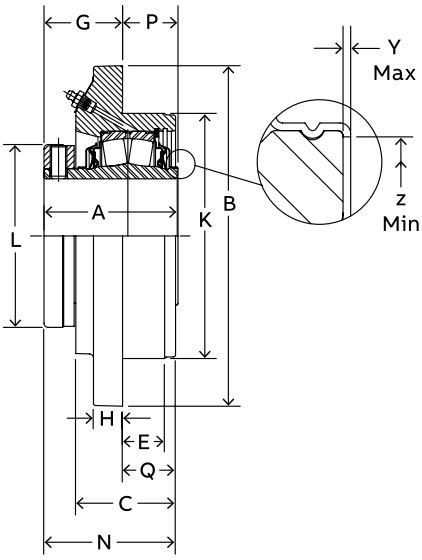

Non-Expansion

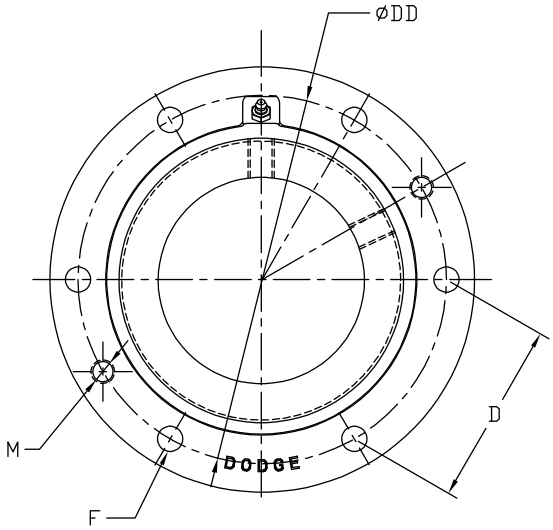

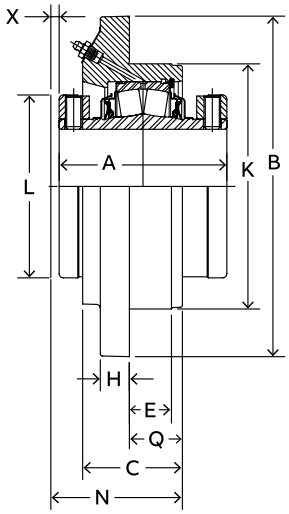

4-7/16 & 4-15/16 Construction

Expansion

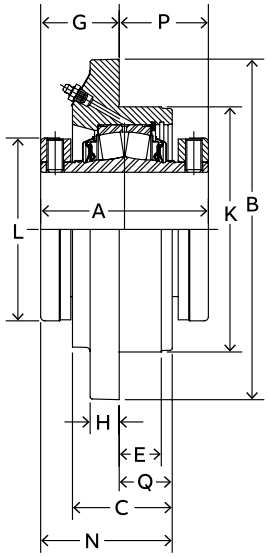

4-7/16 & 4-15/16 Construction

Non-Expansion

S-2000 piloted flange – inch

4-bolt, E-dimensioned

Trident seal

Bearing series	Shaft size	Non-expansion		Expansion	
		Part number	Description	Part number	Description
22208	1-3/8	070644	FC-S2-106R	070671	FC-S2-106RE
	1-7/16	070645	FC-S2-107R	070672	FC-S2-107RE
22209	1-11/16	070648	FC-S2-111R	070675	FC-S2-111RE
22210	1-15/16	070650	FC-S2-115R	070677	FC-S2-115RE
	2	070651	FC-S2-200R	070678	FC-S2-200RE
22211	2-3/16	070652	FC-S2-203R	070679	FC-S2-203RE
22213	2-7/16	070654	FC-S2-207R	070681	FC-S2-207RE
22215	2-11/16	070656	FC-S2-211R	070683	FC-S2-211RE
	2-15/16	070657	FC-S2-215R	070684	FC-S2-215RE
	3	070658	FC-S2-300R	070685	FC-S2-300RE
22218	3-7/16	070660	FC-S2-307R	070687	FC-S2-307RE
22220	3-15/16	070662	FC-S2-315R	070689	FC-S2-315RE
22222	4-7/16	071521	EFC-S2-407R	071523	EFC-S2-407RE
22226	4-15/16	071522	EFC-S2-415R	071524	EFC-S2-415RE

Labyrinth seal

Bearing series	Shaft size	Non-expansion		Expansion	
		Part number	Description	Part number	Description
22208	1-3/8	070698	FC-S2-106L	070725	FC-S2-106LE
	1-7/16	070699	FC-S2-107L	070726	FC-S2-107LE
22209	1-11/16	070702	FC-S2-111L	070729	FC-S2-111LE
22210	1-15/16	070704	FC-S2-115L	070731	FC-S2-115LE
	2	070705	FC-S2-200L	070732	FC-S2-200LE
22211	2-3/16	070706	FC-S2-203L	070733	FC-S2-203LE
22213	2-7/16	070708	FC-S2-207L	070735	FC-S2-207LE
22215	2-11/16	070710	FC-S2-211L	070737	FC-S2-211LE
	2-15/16	070711	FC-S2-215L	070738	FC-S2-215LE
	3	070712	FC-S2-300L	070739	FC-S2-300LE
22218	3-7/16	070714	FC-S2-307L	070741	FC-S2-307LE
22220	3-15/16	070716	FC-S2-315L	070743	FC-S2-315LE
22222	4-7/16	071525	EFC-S2-407L	071527	EFC-S2-407LE
22226	4-15/16	071526	EFC-S2-415L	071528	EFC-S2-415LE

Shaft size	A	B #	C #	D	DD	E #	F bolt dia.	G	H #	K ##	L	M	N	P	Q #	X total exp	Y	Z	Set screw size	S/S torque (in/lbs)
1-3/8	2.53	5.25	1.84	3.09	4.38	0.75	3/8	1.31	0.50	3.625	2.55	3/8-16	2.53	1.22	1.22	3/16	0.020	1.80	5/16	165
1-7/16																				
1-11/16	2.67	6.13	1.91	3.63	5.13	0.88	7/16	1.45	0.50	4.250	3.01	7/16-14	2.72	1.22	1.26	1/4	0.020	2.08	5/16	165
1-15/16	2.84	6.38	2.00	3.80	5.38	0.88	7/16	1.59	0.56	4.500	3.44	7/16-14	2.86	1.25	1.26	1/4	0.020	2.30	3/8	290
2																				
2-3/16	2.94	7.13	2.19	4.25	6.00	1.00	1/2	1.56	0.56	5.000	3.50	1/2-13	2.98	1.38	1.42	1/4	0.025	2.59	3/8	290
2-7/16	3.20	7.63	2.50	4.59	6.50	1.00	1/2	1.64	0.63	5.500	4.06	1/2-13	3.20	1.56	1.56	1/4	0.025	2.94	3/8	290
2-11/16	3.59	8.75	2.63	5.30	7.50	1.25	5/8	2.03	0.75	6.375	4.61	5/8-11	3.64	1.56	1.63	1/4	0.025	3.47	1/2	620
2-15/16																				
3																				
3-7/16	4.01	10.25	3.00	6.09	8.63	1.26	3/4	2.36	0.94	7.375	5.50	3/4-10	3.88	1.65	1.52	1/4	0.025	4.05	1/2	620
3-15/16	4.47	10.88	3.50	6.63	9.38	1.47	3/4	2.66	1.13	8.125	6.00	3/4-10	4.56	1.81	1.91	5/16	0.025	4.50	5/8	1325
4-7/16	6.53	13.50	4.58	5.88	11.75	1.45	3/4 **	3.00	0.94	10.250	6.45	3/4-10	5.63	3.53	2.63	3/8	—	—	5/8	1325
4-15/16	6.91	14.75	4.88	6.38	12.75	1.70	7/8 **	2.97	1.25	11.000	7.45	7/8-9	5.95	3.94	3.01	3/8	—	—	5/8	1325

Pilot diameter tolerance = +0.000", -0.002"

\# Reference dimension only.

Notes: "P" and "G" dimensions are for non-expansion only.

"A" and "P" dimensions do not include "Y" dimension.

S-2000 take-up – inch

Wide-slot (WS)

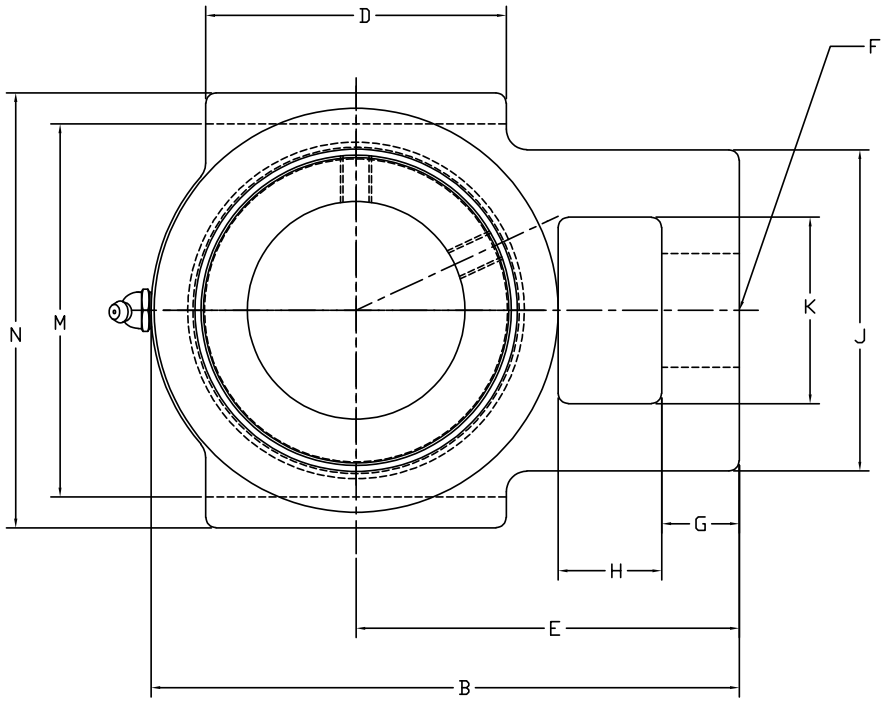

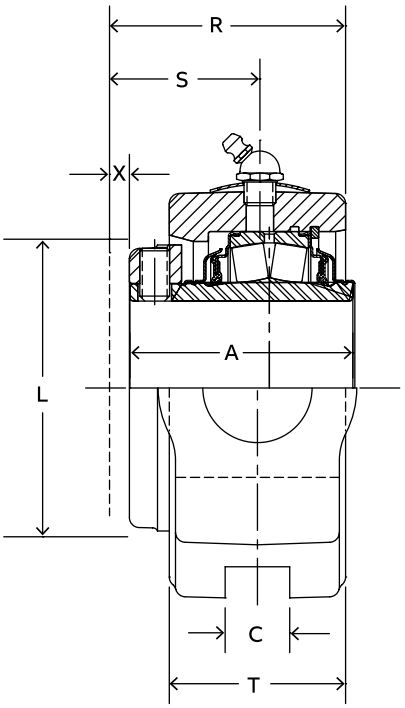

Expansion

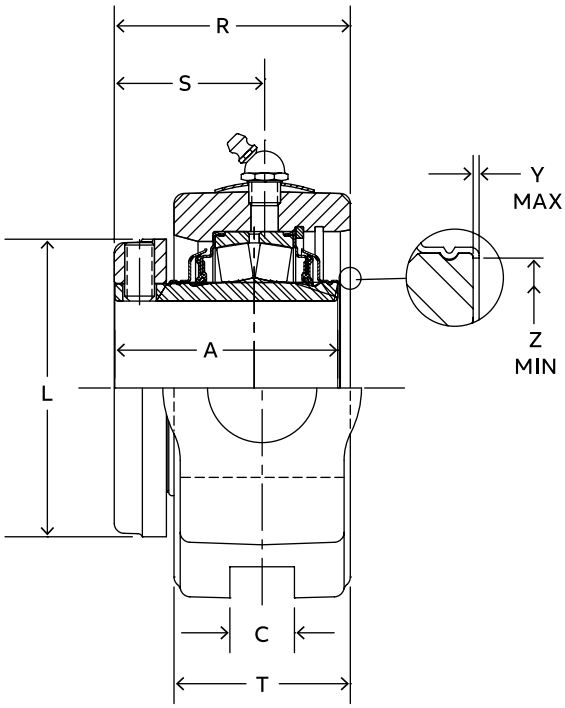

Non-Expansion

S-2000 take-up – inch

Wide-slot (WS)

Trident seal

Bearing series	Shaft size	Take-up frame	Non-expansion		Expansion	
			Part number	Description	Part number	Description
22208	1-3/8	CP-308	070752	WSTU-S2-106R	070779	WSTU-S2-106RE
	1-7/16		070753	WSTU-S2-107R	070780	WSTU-S2-107RE
	1-1/2		070754	WSTU-S2-108R	070781	WSTU-S2-108RE
22209	1-11/16	CP-400	070756	WSTU-S2-111R	070783	WSTU-S2-111RE
	1-3/4		070757	WSTU-S2-112R	070784	WSTU-S2-112RE
22210	1-15/16	CP-400	070758	WSTU-S2-115R	070785	WSTU-S2-115RE
	2		070759	WSTU-S2-200R	070786	WSTU-S2-200RE
22211	2-3/16	CP-408	070760	WSTU-S2-203R	070787	WSTU-S2-203RE

Shaft size	A	B	C	D	E	F	G	H	J	K	L	M	N	R	S	T	X total exp	Y	Z
1-3/8																			
1-7/16	2.53	5.06	0.53	2.75	3.19	7/8	0.69	0.63	2.44	1.44	2.75	3.50	4.13	2.73	1.70	2.06	3/16	0.020	1.80
1-1/2																			
1-11/16	2.67	5.94	0.69	3.13	3.81	1-1/8	0.94	0.75	3.31	1.94	3.19	4.00	4.75	2.83	1.81	2.03	1/4	0.020	2.08
1-3/4																			
1-15/16	2.84	6.19	0.69	3.63	3.94	1-1/8	0.94	0.75	3.31	1.94	3.44	4.00	4.75	2.94	1.94	2.00	1/4	0.020	2.30
2																			
2-3/16	2.94	7.06	0.81	3.63	4.63	1-3/8	0.94	1.25	3.88	2.25	3.75	4.50	5.25	3.09	1.98	2.22	1/4	0.020	2.59

S-2000 take-up – inch

Wide-slot (WS)

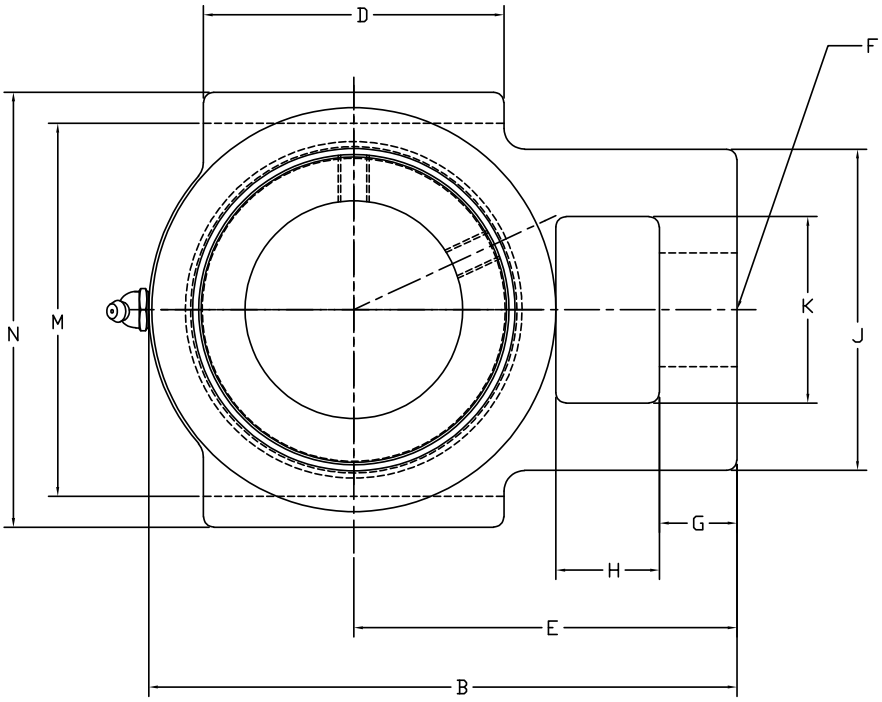

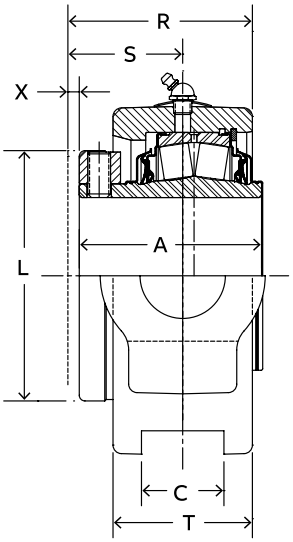

1-3/8 thru 3-15/16" Construction

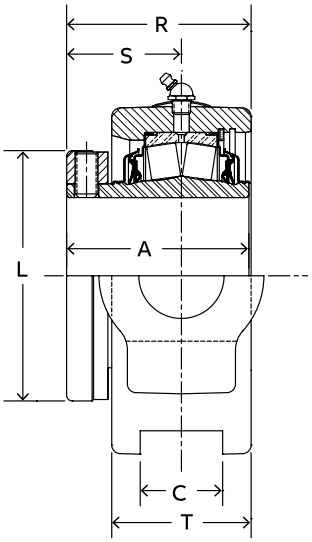

1-3/8 thru 3-15/16" Construction

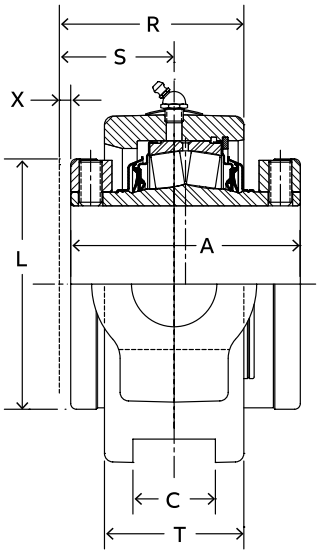

4-7/16 thru 4-15/16" Construction

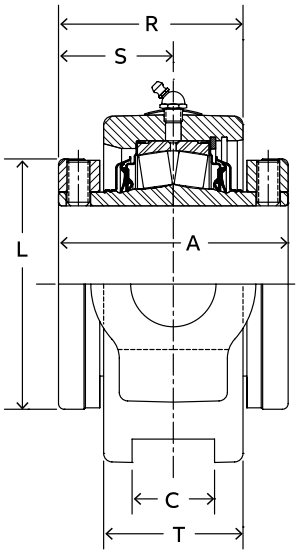

4-7/16 thru 4-15/16" Construction

S-2000 take-up – inch

Wide-slot (WS)

Trident seal

Bearing series	Shaft size	Take-up frame	Non-expansion		Expansion	
			Part number	Description	Part number	Description
22213	2-7/16	CP-502	070762	WSTU-S2-207R	070789	WSTU-S2-207RE
22215	2-11/16	CP-515	070764	WSTU-S2-211R	070791	WSTU-S2-211RE
	2-15/16		070765	WSTU-S2-215R	070792	WSTU-S2-215RE
	3		070766	WSTU-S2-300R	070793	WSTU-S2-300RE
22218	3-7/16	CP-613	070768	WSTU-S2-307R	070795	WSTU-S2-307RE
22220	3-15/16	CP-810	070770	WSTU-S2-315R	070797	WSTU-S2-315RE
22222	4-7/16	CP-908	070772	WSTU-S2-407R	070799	WSTU-S2-407RE
22226	4-15/16	CP-1004	070774	WSTU-S2-415R	070801	WSTU-S2-415RE

Shaft size	A	B	C	D	E	F	G	H	J	K	L	M	N	R	S	T	X total exp	Y	Z
2-7/16	3.20	7.69	1.06	4.38	5.00	1-3/8	1.06	1.25	4.25	2.50	4.06	5.13	5.88	3.20	2.00	2.44	1/4	0.025	2.94
2-11/16																			
2-15/16	3.59	8.88	1.81	4.50	5.75	1-5/8	1.13	1.50	4.88	2.75	4.70	5.94	6.69	3.75	2.41	2.69	1/4	0.025	3.47
3																			
3-7/16	4.00	10.06	1.81	5.50	6.38	1-7/8	1.06	1.63	5.13	2.88	5.50	6.81	7.81	4.05	2.52	3.06	1/4	0.025	4.05
3-15/16	4.47	12.56	2.06	7.00	6.38	2-1/8	2.06	2.13	6.00	3.38	6.00	8.63	9.44	4.58	2.86	3.44	5/16	0.025	4.50
4-7/16	6.53	13.38	2.06	7.00	8.75	2-1/8	2.00	2.13	6.78	3.38	6.45	9.50	10.33	5.34	3.47	3.75	3/8	—	—
4-15/16	6.91	15.63	2.06	9.00	10.31	2-3/8	2.50	2.50	7.00	3.75	7.45	10.25	11.25	5.73	3.64	4.19	3/8	—	—

S-2000 take-up – inch

Top-angle heavy-duty universal (TPHU)

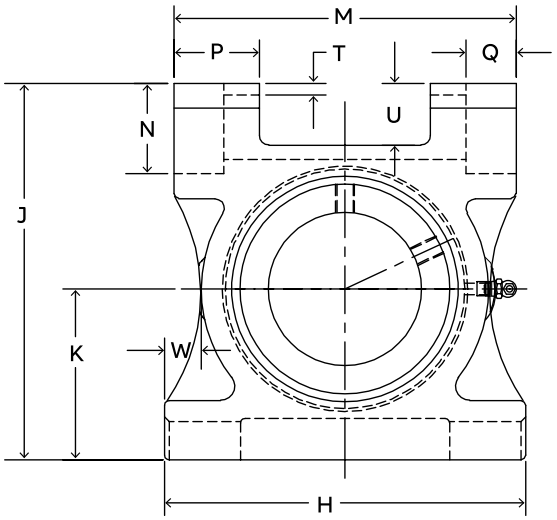

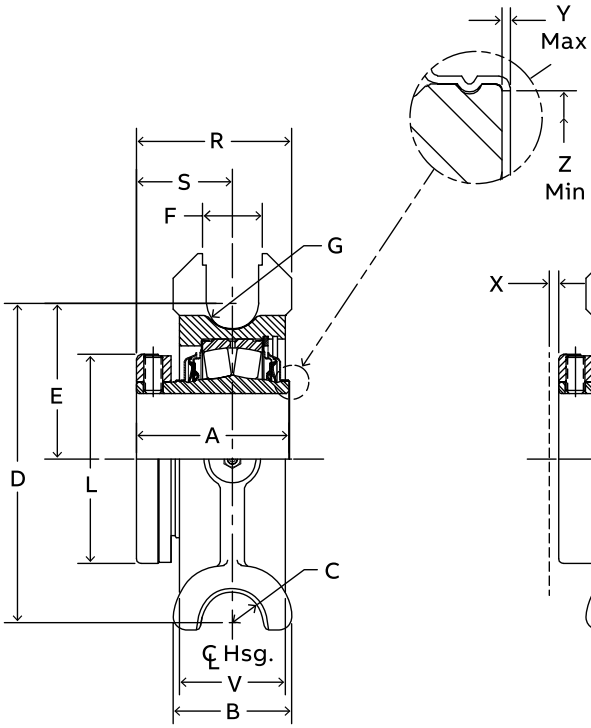

1-3/8" thru 3-15/16"
Construction
Non-Expansion

1-3-8" thru 3-15/16
Construction
Expansion

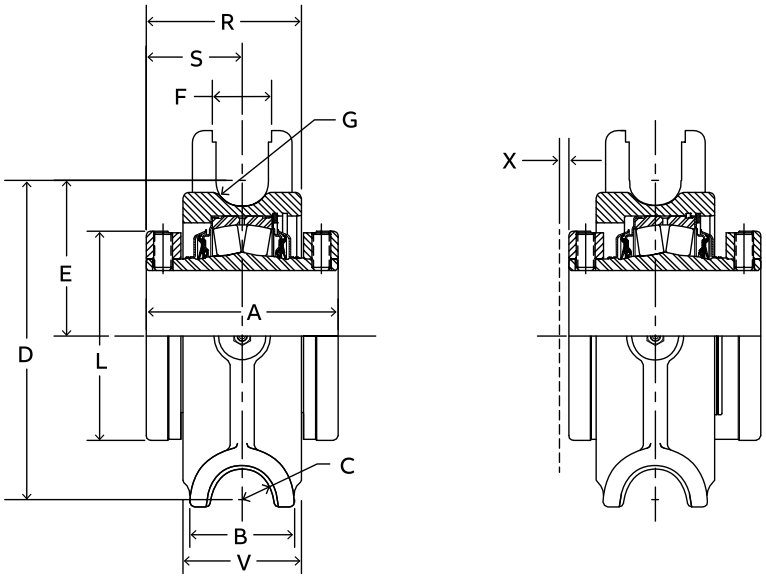

4-7/16" thru 5"
Construction
Non-Expansion

4-7-16" thru 5"
Construction
Expansion

S-2000 take-up – inch

Top-angle heavy-duty universal (TPHU)

Trident seal

Bearing series	Shaft size	Take-up frame		Non-expansion		Expansion	
				Part number	Description	Part number	Description
22210	1-15/16	TP10	TPHU110	070811	TPHU-S2-115R	070829	TPHU-S2-115RE
	2			070812	TPHU-S2-200R	070830	TPHU-S2-200RE
22211	2-3/16	TP30	TPHU120	070813	TPHU-S2-203R	070831	TPHU-S2-203RE
22213	2-7/16	TP40	TPHU130	070815	TPHU-S2-207R	070833	TPHU-S2-207RE
22215	2-11/16	TP40	TPHU140	070817	TPHU-S2-211R	070835	TPHU-S2-211RE
	2-15/16			070818	TPHU-S2-215R	070836	TPHU-S2-215RE
	3			070819	TPHU-S2-300R	070837	TPHU-S2-300RE
22218	3-7/16	TP50	TPHU150	070821	TPHU-S2-307R	070839	TPHU-S2-307RE
22220	3-15/16	TP60	TPHU160	070823	TPHU-S2-315R	070841	TPHU-S2-315RE
22222	4-7/16	N/A	TPHU170	070825	TPHU-S2-407R	070843	TPHU-S2-407RE
22226	4-15/16	N/A	TPHU180	070827	TPHU-S2-415R	070845	TPHU-S2-415RE

Shaft size	A	B	C	D	E	F	G	H	J	K	L	M
1-15/16	2.84	2.38	0.81	5.19	2.38	1.06	0.44	6.50	6.44	3.06	3.44	6.00
2												
2-3/16	2.94	2.75	0.81	6.25	3.00	1.44	0.56	7.50	7.63	3.50	3.75	7.00
2-7/16	3.20	2.75	0.81	7.14	3.33	1.44	0.56	8.50	8.28	3.84	4.06	8.00
2-11/16	3.59	2.75	0.81	7.13	3.31	1.44	0.56	8.50	8.50	4.00	4.70	8.00
2-15/16												
3												
3-7/16	4.00	3.13	0.81	8.41	4.09	1.56	0.69	9.50	10.06	4.50	5.50	9.00
3-15/16	4.47	3.13	0.81	9.25	4.56	1.56	0.69	11.00	11.50	5.50	6.00	10.50
4-7/16	6.53	3.38	0.81	10.19	5.00	1.56	0.69	11.00	12.38	6.00	6.45	10.50
4-15/16	6.91	3.50	0.81	12.44	6.06	1.81	0.69	14.38	14.63	7.19	7.45	13.88

Shaft size	N	P	Q	R	S	T	U	V	W	X total exp	Y	Z
1-15/16	1.66	1.25	0.81	3.19	2.00	0.31	1.06	2.00	0.88	0.25	0.020	2.30
2												
2-3/16	1.94	1.75	1.06	3.39	2.02	0.31	1.56	2.25	0.94	0.25	0.025	2.59
2-7/16	1.88	1.75	1.06	3.53	2.16	0.31	1.44	2.75	1.00	0.25	0.025	2.94
2-11/16	1.94	1.75	1.06	3.83	2.45	0.31	1.50	2.75	1.00	0.25	0.025	3.47
2-15/16												
3												
3-7/16	2.53	2.25	1.31	4.22	2.66	0.31	1.78	3.13	0.97	0.25	0.025	4.05
3-15/16	2.50	2.31	1.31	4.52	2.95	0.31	2.00	3.13	1.25	0.31	0.025	4.50
4-7/16	2.44	2.31	1.31	5.45	3.45	0.38	1.94	4.00	0.86	0.38	0.036	5.00
4-15/16	2.38	3.94	1.31	5.88	3.66	0.38	1.94	4.45	1.42	0.38	0.036	5.84

S-2000 bearing insert – inch

Contact Seal

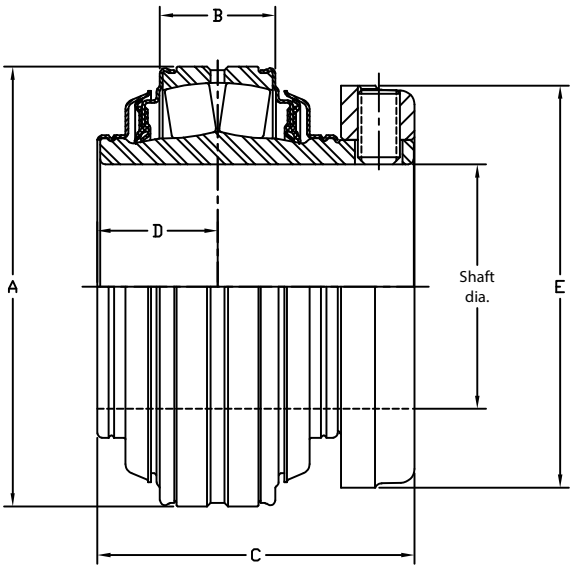

1-3/8 thru 3-15/16" Construction

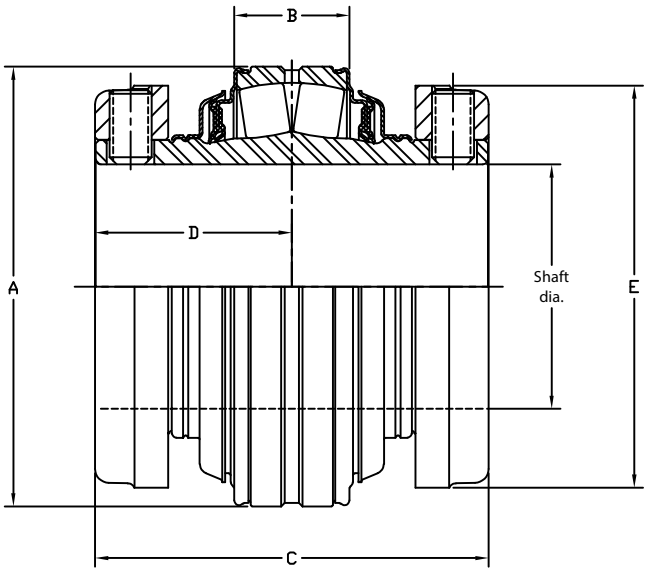

4-7/16 thru 4-15/16" Construction

Labyrinth Seal

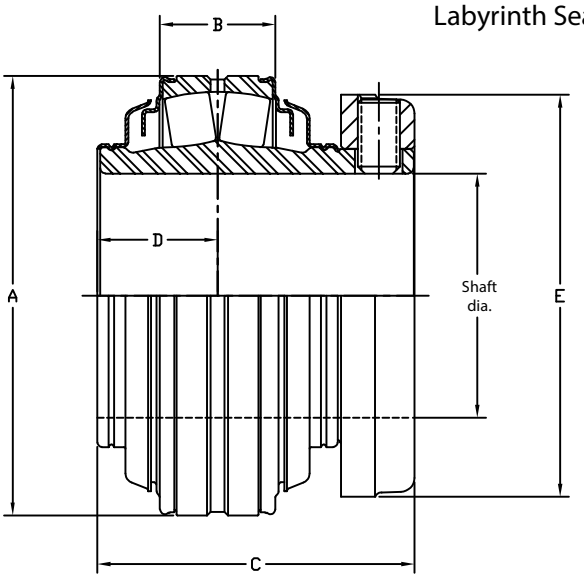

1-3/8 thru 3-15/16" Construction

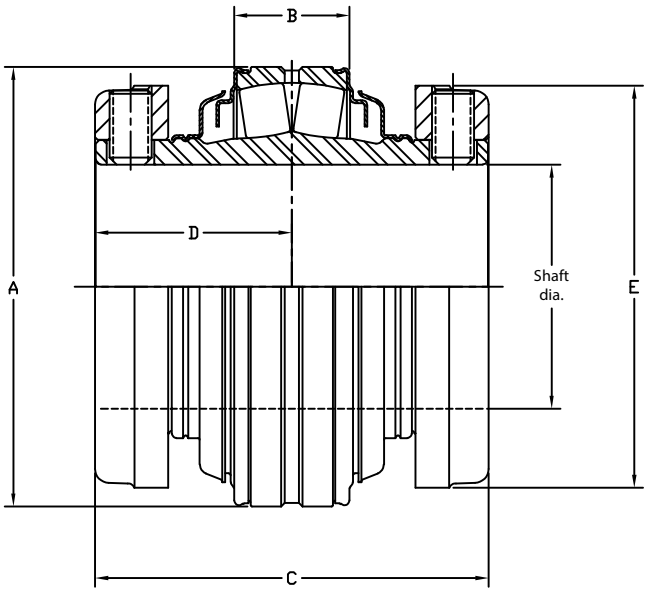

4-7/16 thru 4-15/16" Construction

S-2000 bearing insert – inch

Trident seal

Bearing series	Shaft size	Part number	Description
22208	1-3/8	070000	INS-S2-106R
	1-7/16	070001	INS-S2-107R
	1-1/2	070002	INS-S2-108R
22209	1-11/16	070003	INS-S2-111R
	1-3/4	070004	INS-S2-112R
22210	1-15/16	070005	INS-S2-115R
	2	070006	INS-S2-200R
22211	2-3/16	070007	INS-S2-203R
22213	2-7/16	070008	INS-S2-207R
22215	2-11/16	070009	INS-S2-211R
	2-15/16	070010	INS-S2-215R
	3	070011	INS-S2-300R
22218	3-7/16	070012	INS-S2-307R
22220	3-15/16	070013	INS-S2-315R
22222	4-7/16	070014	INS-S2-407R
22226	4-15/16	070015	INS-S2-415R

Labyrinth seal

Bearing series	Shaft size	Part number	Description
22208	1-3/8	070016	INS-S2-106L
	1-7/16	070017	INS-S2-107L
	1-1/2	070018	INS-S2-108L
22209	1-11/16	070019	INS-S2-111L
	1-3/4	070020	INS-S2-112L
22210	1-15/16	070021	INS-S2-115L
	2	070022	INS-S2-200L
22211	2-3/16	070023	INS-S2-203L
22213	2-7/16	070024	INS-S2-207L
22215	2-11/16	070025	INS-S2-211L
	2-15/16	070026	INS-S2-215L
	3	070027	INS-S2-300L
22218	3-7/16	070028	INS-S2-307L
22220	3-15/16	070029	INS-S2-315L
22222	4-7/16	070030	INS-S2-407L
22226	4-15/16	070031	INS-S2-415L

Shaft size	A	B	C	D	E
1-3/8					
1-7/16	2.53	5.25	1.84	3.09	0.75
1-1/2					
1-11/16					
1-3/4	2.67	6.13	1.91	3.63	0.88
1-15/16					
2	2.84	6.38	2.00	3.80	0.88
2-3/16	2.94	7.13	2.19	4.25	1.00
2-7/16	3.20	7.63	2.50	4.59	1.00
2-11/16					
2-15/16	3.59	8.75	2.63	5.30	1.25
3					
3-7/16	4.00	10.25	3.00	6.09	1.27
3-15/16	4.47	10.88	3.50	6.63	1.47
4-7/16	6.53	13.58	4.00	5.88	1.45
4-15/16	6.91	14.84	4.38	6.38	1.70

Accessories

S-2000 end covers – inch

Steel, open



Shaft size	Front end				Backside			
	S2 and S2-HD		S2-E and S2-HD-E		S2 and S2-HD		S2-E and S2-HD-E	
	Part number	Description	Part number	Description	Part number	Description	Part number	Description
1-3/8	070240	S2ECO-08-106	070240	S2ECO-08-106	072503	S2IPBECO-08-106	072503	S2IPBECO-08-106
1-7/16	070241	S2ECO-08-107	070241	S2ECO-08-107	072504	S2IPBECO-08-107	072504	S2IPBECO-08-107
1-1/2	070242	S2ECO-08-108	070242	S2ECO-08-108	072505	S2IPBECO-08-108	072506	ES2IPBECO-09-108
1-11/16	070243	S2ECO-09-111	070243	S2ECO-09-111	072508	S2IPBECO-09-111	072508	S2IPBECO-09-111
1-3/4	070244	S2ECO-09-112	070244	S2ECO-09-112	072509	S2IPBECO-09-112	072510	ES2IPBECO-10-112
1-15/16	070245	S2ECO-10-115	070245	S2ECO-10-115	072512	S2IPBECO-10-115	072512	S2IPBECO-10-115
2	070246	S2ECO-10-200	070246	S2ECO-10-200	072513	S2IPBECO-10-200	072513	S2IPBECO-10-200
2-3/16	070247	S2ECO-11-203	070247	S2ECO-11-203	072514	S2IPBECO-11-203	072514	S2IPBECO-11-203
2-7/16	070178	S2IPECO-13-207	070178	S2IPECO-13-207	072518	S2IPBECO-13-207	072518	S2IPBECO-13-207
2-11/16	070248	S2ECO-15-211	070248	S2ECO-15-211	072520	S2IPBECO-15-211	072520	S2IPBECO-15-211
2-15/16	070249	S2ECO-15-215	070249	S2ECO-15-215	072522	S2IPBECO-15-215	072522	S2IPBECO-15-215
3	070250	S2ECO-15-300	070250	S2ECO-15-300	072523	S2IPBECO-15-300	072523	S2IPBECO-15-300
3-7/16	070186	S2IPECO-18-307	070186	S2IPECO-18-307	072526	S2IPBECO-18-307	072526	S2IPBECO-18-307
3-15/16	070189	S2IPECO-20-315	070189	S2IPECO-20-315	072529	S2IPBECO-20-315	072529	S2IPBECO-20-315
4-7/16	070191	S2IPECO-22-407	070191	S2IPECO-22-407	072532	S2BECO-22-407	072532	S2BECO-22-407
4-15/16	070193	S2IPECO-26-415	070193	S2IPECO-26-415	072535	S2BECO-26-415	072535	S2BECO-26-415

S-2000 end covers – inch

Steel, closed



Shaft size	S2 and S2-HD		S2-E and S2-HD-E	
	Part number	Description	Part number	Description
1-3/8—1-1/2	069970	S2EC08	069960	IPEC08
1-11/16—1-3/4	069971	S2EC09	069961	IPEC09
1-15/16—2	069972	S2EC10	069962	IPEC10
2-3/16	069973	S2EC11	069963	IPEC11
2-7/16	069964	S2EC13	069964	IPEC13
2-11/16—3	069975	S2EC15	069965	IPEC15
3-7/16	069966	S2IPEC18	069966	S2IPEC18
3-15/16	069967	S2IPEC20	069967	S2IPEC20
4-7/16	069968	S2IPEC22	069968	S2IPEC22
4-15/16	069969	S2IPEC26	069969	S2IPEC26

S-2000 end covers – inch

Steel, open/closed

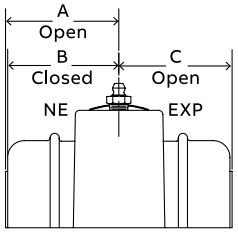

Pillow block

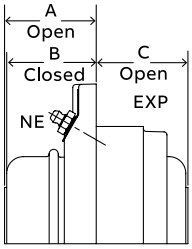

Piloted flange

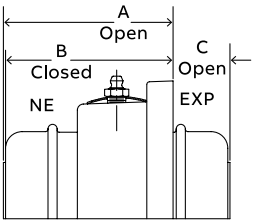

Flange

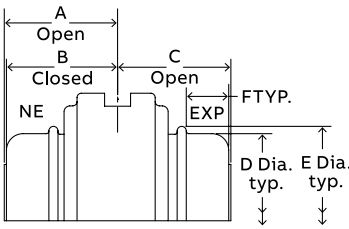

WS Take-Up

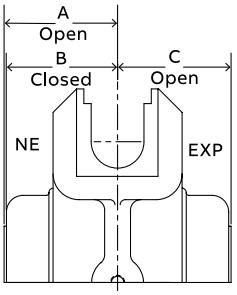

TP and TPHU Take-Up

	Shaft size	S-2000 pillow block (2-bolt)	S-2000 pillow block (4-bolt)	*E-S-2000 pillow block (2-bolt)	*E-S-2000 pillow block (4-bolt)	S-2000 piloted flange	*E-S-2000 piloted flange	S-2000 round flange	S-2000 square flange	*E-S-2000 square flange	Wide-slot take-up	Top angle take-up	D	E	F
A Open	1-3/8	2.03		2.03		1.67	1.67	3.12	3.45	3.45	2.06				
B Closed	1-7/16	1.97	—	1.97	—	1.61	1.61	3.06	3.39	3.39	2.00	—	2.94	3.19	0.75
C Open	1-1/2	2.11		2.11		2.46	2.46	0.99	0.99	1.20	2.10				
A Open		2.22		2.22		1.83	1.83	3.33	4.07	4.07	2.19				
B Closed	1-11/16	2.16	—	2.16	—	1.77	1.77	3.27	4.01	4.01	2.13	—	3.27	3.39	0.88
C Open		2.25		2.25		2.60	2.60	1.10	1.10	1.20	2.25				
A Open		2.22		2.22		1.83	1.83	3.33	4.07	4.07	2.19				
B Closed	1-3/4	2.16	—	2.16	—	1.77	1.77	3.27	4.01	4.01	2.13	—	3.27	3.39	0.88
C Open		2.25		2.25		2.60	2.60	1.10	1.10	1.20	2.25				
A Open		2.31	2.31	2.31		1.92	1.92	3.47	3.95	3.95	2.25	2.31			
B Closed	1-15/16—2	2.25	2.25	2.25	—	1.86	1.86	3.41	3.89	3.89	2.19	2.25	3.52	3.61	1.02
C Open		2.45	2.45	2.45		2.83	2.83	1.28	1.28	1.38	2.45	2.43			
A Open		2.47	2.47	2.47		2.00	2.00	3.69	4.53	4.53	2.42	2.47			
B Closed	2-3/16	2.41	2.41	2.41	—	1.94	1.94	3.63	4.47	4.47	2.36	2.40	3.77	3.95	1.03
C Open		2.54	2.54	2.54		3.00	3.00	1.32	1.32	1.40	2.54	2.54			
A Open		2.53	2.53	2.53	2.53	2.18	2.18	4.04	4.72	4.72	2.53	2.70			
B Closed	2-7/16	2.44	2.44	2.44	2.44	2.09	2.09	3.95	4.63	4.63	2.44	2.61	4.41	4.64	1.00
C Open		2.77	2.77	2.77	2.77	3.24	3.24	1.37	1.37	2.77	2.77	2.72			
A Open	2-11/16	2.65	2.65	2.65	2.65	2.29	2.29	4.18	5.06	5.06	2.70	2.73			
B Closed	2-15/16	2.56	2.56	2.56	2.56	2.20	2.20	4.09	4.97	4.97	2.61	2.64	4.92	5.06	1.22
C Open	3	3.06	3.06	3.06	3.06	3.54	3.54	1.66	1.66	1.69	3.06	3.06			
A Open		3.07	3.07	3.07	3.07	2.91	2.91		5.78	5.78	3.07	3.07			
B Closed	3-7/16	2.94	2.94	2.94	2.94	2.78	2.78	—	5.65	5.65	2.94	2.94	5.98	6.22	1.13
C Open		3.31	3.31	3.31	3.31	3.59	3.59		1.63	1.66	3.31	3.31			
A Open		3.49	3.49		3.49	3.32	3.32		7.17	7.17	3.52	3.61			
B Closed	3-15/16	3.36	3.36	—	3.36	3.19	3.19	—	7.04	7.04	3.39	3.48	6.67	6.91	1.38
C Open		3.80	3.80		3.80	4.13	4.13		1.94	1.38	3.80	3.83			
A Open			3.96		3.91	4.02	3.85			7.62	3.97	3.96			
B Closed	4-7/16	—	3.83	—	3.78	3.89	3.72	—	—	7.49	3.84	3.83	7.31	7.56	1.67
C Open			4.23		4.23	4.16	4.68			2.06	4.23	4.23			
A Open			4.49		4.46	4.24	4.08				4.49	4.49			
B Closed	5	—	4.36	—	4.33	4.11	3.95	—	—	—	4.36	4.36	8.44	8.69	1.91
C Open			4.69		4.69	4.91	5.37				4.69	4.68			

Notes

Unified SAF (spherical)

B24-1	**Unified SAF (spherical)**
B24-2	**Features and benefits**
B24-6	**Specification**
B24-7	**Nomenclature**
B24-11	**Selection**
B24-32	**Dimensions**
B24-32	Adapter mount
B24-32	USAF 500 series Split-Sphere
B24-36	USAF 500 series
B24-58	USAF 500 series air handling
B24-60	SAF-XT 500 series
B24-64	SAFS 500 series
B24-72	USAF 600 series
B24-78	USDAF large-bore
B24-88	Direct mount
B24-88	USAF 200 series
B24-100	USAF 300 series
B24-114	**Accessories**

Features and benefits

Unified SAF

Overview

Capable of withstanding harsh environments, Unified SAF (USAF) bearings have built-in design advancements to provide maximum strength and durability for long-lasting operation. USAF bearings are available in a large range of shaft sizes and bearing series to fit any application.



Key features

- Multiple seal options available
- Capable of oil lubrication for easier maintenance
- Cast-in dimples locate drill holes for lube fitting, vents, and mounting modifications
- Standard housings have two oversized drains adaptable for circulating oil systems
- Pry slots allow for easy separation of the pillow block
- Sensor-ready for condition monitoring
- Intelli-Lube compatible to effortlessly extend the life of your bearings

Unified SAF

Product options



Cast-iron, closed-end housings provide maximum protection in high-pressure washdown environments.



Housings are available with stainless-steel hardware and modifications such as nylon coating, epoxy paints, and nickel plating for performance in extremely wet and dirty environments.



Drop-in Triple-Tect seal can be easily installed on-site and provides an additional layer of protection against contamination.



Undercut bearing seat allows full lateral travel of expansion bearing, preventing stabilization ring from binding and streamlining installation.



Large-capacity oil sump lowers operating temperatures, while exclusive oil-equalization passage simplifies maintenance and allows oil to be drained completely from either side.

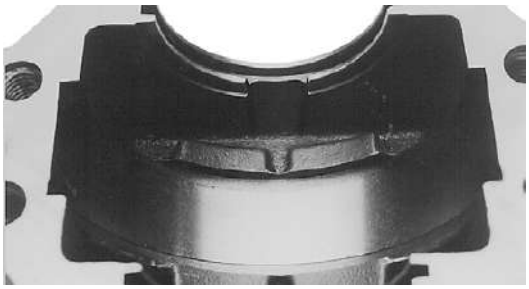

Oil-return slots are cast into the interior seal grooves, retaining lubrication and allowing oil in the seal grooves to return to the oil sump rather than leaking.



Offset dowels with matched numbers on the cap and base joint simplify assembly for easier installation.

Unified SAF

Split-Sphere insert

Dodge offers a split-race spherical bearing that fits SAF housings and replaces bearing and adapter assemblies. In instances where the shaft must be stripped of components to permit sliding the new bearing to its proper shaft location, split-race spherical bearings provide valuable savings in labor and time.

Standard dimensions

Our Split-Sphere bearing has the same OD dimensions as a standard spherical bearing. This allows use of a Split-Sphere pillow block on the inaccessible end of a shaft and a standard pillow block on the accessible end. Dodge offers the only split-race bearings made to standard SAF pillow block dimensions.

If required, the backing dimension of the Split-Sphere block can be increased by shimming to meet the requirements of any roller bearing it replaces.

Simplified replacements

To replace a standard spherical roller bearing with a Split-Sphere insert, remove the cap, elevate the shaft enough to support the load, and burn off the failed bearing and adapter with a torch.

The Split-Sphere lower halves and split seals can then be slipped under the shaft. Bolt the upper halves in place, lower the shaft, and replace the cap. Shaft-mounted components, motors, and other machinery can remain in place.



Unified SAF

SAF-XT



The SAF-XT pillow block housing provides SAF dimensional interchangeability in a more compact design, requiring less shaft to fit in tighter spaces. The offset of the bearing seat in the housing allows the bearing position to be optimized closer to the load. With four bolt caps, cap removal pry slots, elongated bolt holes, and dimpled feet for doweling, SAF-XT offers easier installation in challenging environments. Its enhanced sealing system allows for effective purging for optimized lubrication and effective protection from contamination.

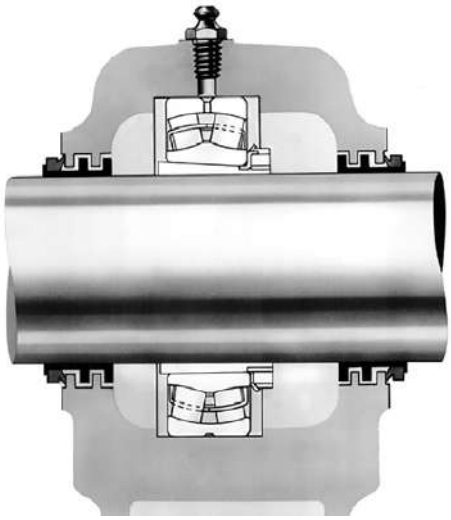

In contrast to costly, competitive auxiliary seals featuring up to three grease fittings, SAF-XT pillow blocks feature one grease fitting—reducing opportunity for voids while minimizing relubrication time. Grease relief channels result in self-centering positive contact sealing. The thinner housing design minimizes sump cavity for maximum efficiency during relubrication and purging—contributing to streamlined maintenance and enhanced life.

SAFS



SAFS pillow block utilizes a steel housing, mounting 22200K series spherical roller bearings on 2-7/16 to 8 inches shafts.

Steel-housed pillow blocks are well-suited for applications requiring either grease or oil lubrication where adapter mounting is preferred and thrust loads are limited. Cast steel housings provide greater resistance to impact and shock loading than cast iron pillow blocks.

Our SAFS pillow block feature the Triple-Tect sealing system—a combination labyrinth and face-rubbing contact seal. LER triple-ring seals, purgeable auxiliary seals, end covers, and Split-Sphere bearings and seals are available with the SAF pillow block where required.

Specification

Unified SAF

Housing

Standard housing material is a high-performance cast-iron. SAFS pillow block housings utilize a cast steel.

Special drilling

The standard offering includes a W33 lube hole and fitting, along with a cap vent hole. Unified bearings also come standard with dual oversized drain holes in the base. Additional holes may be drilled to meet customer specifications for lube, vent and sensor locations. To order, specify holes required from chart on page B24-21-22 and add to the end of the description. Order by description instead of part number. Minimum order quantities will be required for this special drilling.

Special finishes

A variety of finishes are available for extra corrosion resistance. The standard finish is USDA-approved, water-based paint. When special finishes are specified, Dodge recommends the use of stainless-steel cap bolts and grease fittings. To order, specify the “type of finish” required and “stainless bolts and fittings” at the end of the description. Order by description for special finishes.

Bearings

Standard bearings offered are 22200 and 22300 series metal-caged, double-row spherical roller bearings with C3 fits in both direct and adapter mounts (shaft sizes larger than 8 inches are standard with C0 fit). Other double-row spherical bearing series are available on request including 23000 and 23200 in both direct and adapter mount. Self-aligning ball bearing series 1200, 1300 and 2200 in both adapter and direct mount are available on request. To order, specify bearing “series” or “fit” at the end of the description.

For applications requiring modifications not listed, contact Application Engineering at +1 864 284 5700.

Nomenclature

Unified SAF

Complete pillow block

P2B - 515 - USAF - 207 - TT

Housing style

P2B = 2-Bolt pillow block, cast iron, both ends open

P4B = 4-Bolt pillow block, cast iron, both ends open

CP2B = 2-Bolt pillow block, cast iron, one end closed

CP4B = 4-Bolt pillow block, cast iron, one end closed

Bearing series and housing size

2XX = For direct mount 22200 series bearing

3XX = For direct mount 22300 series bearing

5XX = For adapter mounted 22200K series bearing

6XX = For adapter mounted 22300K series bearing

0XX = For adapter mounted 23000K series bearing

Type of mounted bearing

USAF = Unified SAF pillow block (inch dimensions)

USDAF = Unified SDAF pillow block

SS = Split-Sphere pillow block

SAF-XT = Unified SAF-XT pillow block (inch dimensions)

SAFS = Unified SAFS pillow block (steel)

Size inches

First digit = Number of inches
2nd and 3rd digit = Number of sixteenths of an inch

2 = 2"
07 = 7/16"
207 = 2-7/16"

Seal type

TT = Triple-Tect
LER = Metal labyrinth
SS = Split non-metallic labyrinth
TTDN = Drop-in Triple-Tect
AUX = Auxiliary (Taconite)
EC = End cover

For monitor equipped pillow blocks a C preceding the pillow block designation indicates closed ends

Bearing

BRG 22215K C3AH

Bearing

BRG = Roller bearing

Bearing series

Spherical
Solid ring type
222 = 22200 Series
223 = 22300 Series
230 = 23000 Series
231 = 23100 Series
232 = 23200 Series

SS = Spherical Split Ring type

K = Tapered adapter sleeve mounting

Otherwise bearing has cylindrical bore for direct mounting

Other data

C3 = Bearing clearance
AH = Air Handling reference

Unified SAF

Housing only (housing and stab ring)

H4S - 515 - USAF

Housing style

H2S = 2-bolt pillow block, cast iron, both ends open

H4S = 4-bolt pillow block, cast iron, both ends open

CH2S = 2-bolt pillow block, cast iron, one end closed

Housing type and size

2XX = For direct mount 22200 series bearing

3XX = For direct mount 22300 series bearing

5XX = For adapter mounted 22200K series bearing

6XX = For adapter mounted 22300K series bearing

0XX = For adapter mounted 23000K series bearing

31XX = For adapter mounted 23100K series bearing

32XX = For adapter mounted 23200K series bearing

Type of mounted bearing housing

USAF = Unified SAF cast iron pillow block housing (inch dimensions)

USDAF = Unified SDAF cast iron pillow block housing (inch dimensions)

Unified SAF

Seals

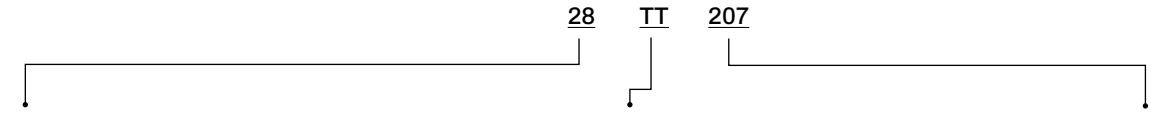

Seal group number

Seals of the same group number all fit the same housings

Type of seal

TT = Triple-Tect

TTDN = Triple-Tect with drop-in feature

LER = Metallic labyrinth seal

AUX = Auxiliary (taconite) seal

SS = Split seal (non-metallic LER)

Seal bore size

Inches and 16ths
2 = 2" and 07 =7/16" or
207 = 2-7/16"

Seal group number and shaft size	Fits housing sizes	Seal group number and shaft size	Fits housing sizes	Seal group number and shaft size	Fits housing sizes
08-107	308, 509, 609	50-315	522, 622	78-715	544
10-111	309, 510, 610	50-400	522, 622	78-800	544
12-114	310	52-403	222, 322, 524, 624	80-805	244
12-115	308, 511, 611	54-407	526, 626	80-806	238, 338
14-201	311	54-408	220, 320, 526, 626	82-812	240
14-202	309	54-409	224, 324	84-907	052
14-203	513, 613	56-414	222, 322	84-908	052
14-204	312	56-415	226, 326, 528, 628	84-909	244
18-206	310	56-500	528, 628	90-807	048
20-207	515, 615	58-503	530, 630	90-808	048
20-208	515, 615	58-505	224, 324, 228, 328	90-815	048
22-207	313	60-507	532, 632	90-900	048
22-209	311	60-508	532, 632	92-915	056
22-210	314	62-512	230, 330	92-1000	056
24-211	516, 616	62-514	226, 236	94-1007	056L
24-212	516, 616	64-515	534, 634	94-1008	056L
24-213	215, 315	64-600	534, 634	96-1015	060, 3160, 3260
26-214	312	64-601	232, 332	96-1100	060, 3160, 3260
28-215	517, 617	66-604	228, 328	98-1107	064
28-300	216, 316, 517, 617	68-607	234, 334, 536	98-1108	064
28-301	313	68-608	536	100-1115	064L, 3164, 3264
32-303	217, 317	70-610	230, 330	100-1200	064L, 3164, 3264
32-304	314	72-614	236	102-1207	068, 168, 268
34-303	518	72-615	538, 638	104-1215	072
36-306	218	72-700	232, 332, 538, 638	104-1300	072
38-307	215, 315	74-703	540	106-1307	072L, 3172
38-310	216, 316	74-704	238, 338	106-1308	072L, 3172
42-315	217, 317	76-707	234, 334	108-1315	076, 3176
44-402	218	76-708	544S	108-1400	076, 3176
46-307	520, 620	76-710	240	110-1500	80
46-308	520, 620	78-713	236	112-1512	84
50-313	220, 320				

Unified SAF

Adapter assemblies

SNW - 15 - 207

Adapter assembly type

SNW = Sleeve, nut and washer assembly through 44 (8 inch) size

SNP = Sleeve, nut and lock plate assembly 048 (8-7/16") and larger sizes

Bearing size

Up to 8" shaft size last two digits of bearing numerical description. For larger sizes last four digits.

Adapter bore size

Inches and 16ths

2 = 2" and 07 =7/16"
or
207 = 2-7/16"

H3 - 15 - SNW - 207

Adapter assembly type

H3 = Adapter series for 22200K series bearings through 4" bore size

H31 = Adapter series for 22200K and 23100K series bearings greater than 4"

H23 = Adapter series for 22300K series bearings

H32 = Adapter series for 23200K series bearings

Bearing size

Last two digits of bearing numerical description.

SNW

SNW = Sleeve, nut and washer assembly through 544 (8") size

SNP = Sleeve, nut and plate assembly from 048 through 084, 3156 through 3176, and 3252 through 3268

Adapter bore size

Inches and 16ths
2 = 2" and 07 =7/16"
or
207 = 2-7/16"

Selection

Unified SAF

USAF, SAF-XT, SAFS, USDAF

USAF 500, 600, 200, 300 Series and USDAF 23000, 23100, 23200

Unified SAF spherical roller bearings have the capacity to carry heavy radial loads and combined radial and thrust loads. The maximum recommended load which can be applied is limited by various components in the system such as bearing, housing, shaft, shaft attachment, speed and life requirements as listed in this catalog. USAF spherical roller bearings have been applied successfully even when these limits have been exceeded under controlled operating conditions. Contact Application Engineering at +1 864-284-5700 for applications which exceed the recommendations of this catalog.

L_{10} hours life – The life which may be expected from at least 90 percent of a given group of bearings operating under identical conditions.

$$L_{10}\text{ life, hours} = \left(\frac{C}{P}\right)^{10/3} X \left(\frac{16{,}667}{rpm}\right)$$

Where:

C = Dynamic capacity, lbs (Table 1)

P = Equivalent radial load, lbs

General

Heavy service - For heavy shock loads, frequent shock loads, or severe vibrations, add up to 50 percent (according to severity of conditions) to the equivalent radial load to obtain a modified equivalent radial load. Consult Application Engineering for additional selection assistance.

Thrust load values shown in the table below are recommended as a guide for general applications that will give adequate L_{10} life. Where substantial radial loads are also present, it is advisable to calculate actual L_{10} life to assure that it meets the requirements.

The shaft tolerances recommended below are adequate for adaptor mounted bearings. Since the allowable load, especially at a low speed, is very large, the shaft should be checked to assure adequate shaft strength.

Rpm range	20—200	201—2000	Over 2000
Recommended thrust load	C/20*	C/40*	C/60*

* Use the smaller of this value or the adaptor maximum allowable thrust load list in Table 1.

The magnitude and direction of both the thrust and radial load must be taken into account when selecting a housing. When pillow blocks are utilized, heavy loads should be directed through the base. Where uplift loads are involved, see Table 6 for maximum values. Where a load pulls the housing away from the mounting base, both the hold-down bolts and housing must be of adequate strength. Auxiliary load carrying devices such as shear bars are advisable for side or end loading of plummer blocks.

Note: Spherical bearings require a radial load at least equal to the thrust load for proper operation($F_a/F_R = 1$). If the thrust load exceeds this limit, consult Application Engineering.

Shaft tolerances

Shaft size (in)	Tolerance (in)
Up to 1-1/2	+0.000 to -0.002
1-9/16—2-1/2	+0.000 to -0.003
2-5/8—4	+0.000 to -0.004
4-3/16—6	+0.000 to -0.005
6-7/16 and above	+0.000 to -0.006

Selecting bearing supporting radial loads only

1. Define L_{10} life hours desired
2. Establish bearing radial load, F_R

   F_R = P for Pure Radial Load Conditions

   P = Equivalent radial Load Conditions
3. Establish rpm

Using the easy selection Table 2, under the rpm column, find the equivalent radial load that equals or is higher than the application radial load for the desired life. The shaft size on the far left will be the minimum shaft size that you can use for your application. If the desired life is different than the values shown on the chart, use alternate method A shown below.

If the desired life is different than the values shown on the chart, use alternate method A shown below.

Example:

L_{10} life = 30,000 hours

Radial load = 4,000 lbs

Rpm = 1,000

At the intersection of the 950 rpm column and the 30,000 hours L_{10} life row, the equivalent radial load of 4,555 lbs exceeds the 4,000 lbs application radial load for shaft size 1-7/16 adapter mount (22309K series bearing) and for shaft size 45 mm direct mount (22309 series bearing). Also, the equivalent radial load of 4,555 lbs exceeds the 4,000 lbs.

Unified SAF

USAF, SAF-XT, SAFS, USDAF

Application radial load for shaft size 2-3/16 inch adapter mount (22213K series bearing) and for shaft size 65 mm direct mount (22213 series bearing). Therefore, the follow bearings can be used to meet the application conditions of the above example:

1. 1-7/16" adapter mount		22309K bearing
2.45 mm direct mount		22309 bearing
	or	
3. 2-3/16" adapter mount		22213K bearing
4.65 mm direct mount		22213 bearing

Alternate method A – Selecting a bearing for an L_{10} life value not shown in the Easy Selection chart.

The L_{10} life equation can be rearranged so that the bearing dynamic capacity C is identified in terms of L_{10}, rpm and P.

$$C = \left(\frac{L_{10} \times rpm}{16{,}667} \right)^{0.3} \quad X \quad P$$

($P = F_R$ for pure radial load conditions)

Since the L_{10}, rpm and P are known, solve for C. Select from the dynamic capacity column on Table 1, the C value equal to or greater than the C value just calculated. The bore size on the far left represents the proper bore size selection. Check that the application rpm does not exceed the maximum rpm from Table 1. When selecting an L_{10} life of less than 30,000 hours, particular attention must be paid to shaft deflection and proper lubricant selection.

Selecting bearings supporting combination radial and thrust loads

When a bearing supports both a radial load and a thrust load, the loading on the two rows is shared unequally depending on the ratio of thrust to radial load. The use of the X (radial factor) and Y (thrust factor) from Table 1, converts the applied thrust load and radial loads to an equivalent radial load having the same effect on the life of the bearing as a radial load of this magnitude.

Equation 1

The equivalent radial load

$$P = XF_R + YF_A$$

Where:

P = Equivalent radial load, lbs

F_R = Radial load, lbs

F_A = Thrust (axial) load, lbs

e = Thrust load to radial load factor (Table 1)

X = Radial load factor (Table 1)

Y = Thrust load factor (Table 1)

Calculate F_A/F_R and compare to e for the selected bore size. Determine X and Y from Table 1, depending on whether F_A/F_R is equal to or less than e, or F_A/F_R is greater than e. Substitute all known values into the equivalent radial load equation. P (equivalent radial load) can be used in the life formula to determine L_{10}, or it can be compared to the allowable equivalent radial load ratings for the speed and hours life desired in the easy selection.

Selecting bearings supporting only thrust loads

Spherical roller bearings generally are not recommended for pure thrust load applications. They will perform satisfactorily under very light pure thrust loads. Consult Application Engineering at +1 864 284 5700.

Axial expansion capability

Axial expansion capability for Unified SAF 500, 600, 200 and 300 pillow blocks is shown on Table 7. Dodge supplies all SAF pillow block housings with the appropriate stabilizing ring. When the stabilizing ring is used, the pillow block becomes a non-expansion pillow block. Not using the stabilizing ring allows shaft and bearing axial expansion. Proper mounting of the stabilizing ring is shown on housing dimension pages.

Unified SAF

USAF, SAF-XT, SAFS, USDAF

Table 1: Radial and thrust factors for USAF spherical bearing

Shaft size				$F_A/F_R<e$		$F_A/F_R>e$					Maximum rpm	
Adapter mount (in)	Direct mount (mm)	Bearing series	e	X	Y	X	Y	Adapter maximum allowable thrust load lbs †	Dynamic capacity (C) lbs	Static capacity (C_0) lbs	Grease	Oil
—	40	22308	0.36	1	1.9	0.67	2.8	—	35,500	33,500	4300	5300
1-7/16	—	22209	0.26	1	2.6	0.67	3.9	698	24,500	23,600	5600	7000
	45	22309	0.36	1	1.9	0.67	2.8	1092	42,500	41,500	3800	4800
1-11/16	—	22210	0.24	1	2.8	0.67	4.2	775	26,000	26,500	5300	6700
	50	22310	0.36	1	1.9	0.67	2.8	1348	51,000	50,000	3400	4300
1-15/16	—	22211	0.23	1	2.9	0.67	4.4	927	31,500	32,500	4500	5600
	55	22311	0.36	1	1.9	0.67	2.8	1672	60,000	58,500	3200	4000
—	60	22312	0.35	1	1.9	0.67	3	—	69,500	69,500	2800	3600
2-3/16	—	22213	0.24	1	2.8	0.67	4.2	1359	45,500	47,500	3800	4500
	65	22313	0.34	1	2	0.67	3	2104	78,000	81,500	2600	3400
—	70	22314	0.34	1	2	0.67	3	—	86,500	86,500	2400	3200
2-7/16	75	22215	0.22	1	3.1	0.67	4.6	1568	48,000	53,000	3400	4300
2-1/2		22315	0.34	1	2	0.67	3	2782	100,000	102,000	2200	3000
2-11/16	80	22216	0.22	1	3.1	0.67	4.7	1780	56,000	60,000	3200	4000
2-3/4		22316	0.34	1	2	0.67	3	3128	112,000	114,000	2200	3000
2-15/16	85	22217	0.22	1	3.1	0.67	4.5	2063	68,000	73,500	3000	3800
3		22317	0.33	1	2	0.67	3	3438	122,000	125,000	2000	2800
3-3/16	90	22218	0.23	1	2.9	0.67	4.3	2429	78,000	85,000	2600	3400
3-7/16	100	22220	0.24	1	2.8	0.67	4.2	3102	96,500	106,000	2200	3000
3-1/2		22320	0.34	1	2	0.67	3	4920	183,000	208,000	1700	2200
3-15/16	110	22222	0.25	1	2.7	0.67	4	3931	122,000	134,000	2000	2800
4		22322	0.33	1	2.1	0.67	3.1	5934	212,000	240,000	1500	1900
4-3/16	120	22224	0.25	1	2.7	0.67	4	4693	143,000	166,000	1900	2400
		22324	0.33	1	2.1	0.67	3.1	6959	240,000	265,000	1400	1800
4-7/16	130	22226	0.26	1	2.6	0.67	3.9	5610	170,000	200,000	1800	2200
4-1/2		22326	0.33	1	2.1	0.67	3.1	8152	280,000	310,000	1300	1700
4-15/16	140	22228	0.25	1	2.7	0.67	4	6419	196,000	236,000	1700	2200
5		22328	0.34	1	2	0.67	3	9628	325,000	365,000	1200	1600
5-3/16	150	22230	0.25	1	2.7	0.67	4	7383	228,000	275,000	1600	2000
		22330	0.33	1	2	0.67	3	10923	365,000	415,000	1100	1500
5-7/16	160	22232	0.26	1	2.6	0.67	3.9	8630	260,000	315,000	1500	1800
5-1/2		22332	0.37	1	1.8	0.67	2.7	12298	325,000	365,000	1000	1400
5-15/16	170	22234	0.26	1	2.6	0.67	3.9	9858	300,000	355,000	1300	1700
6		22334	0.37	1	1.8	0.67	2.7	13755	360,000	475,000	950	1300
6-7/16	180	22236	0.25	1	2.7	0.67	4	10437	305,000	375,000	1300	1600
6-1/2		22336	0.37	1	1.8	0.67	2.7	15291	405,000		900	1100
6-15/16	190	22238	0.28	1	2.4	0.67	3.6	11786	305,000	395,000	1200	1300
7		22338	0.37	1	1.8	0.67	2.7	16910	415,000	570,000	850	1100
7-3/16	200	22240	0.29	1	2.3	0.67	3.5	13215	341,000	450,000	1100	1200
7-1/2				1								
7-15/16	220	22244	0.29	1	2.3	0.67	3.5	16020	413,000	530,000	950	1000
8				1								
8-7/16				1								
8-1/2	—	23048	0.25	1	2.7	0.67	4.1	14887	303,000	476,000	950	1000
8-15/16, 9				1								
9-7/16	—	23052	0.26	1	2.6	0.67	3.9	18232	375,000	584,000	900	950
9-1/2				1								
9-15/16, 10				1								
10-7/16	—	23056	0.25	1	2.7	0.67	4.1	20000	400,000	640,000	850	900
10-1/2				1								

† If the thrust load exceeds adapter maximum allowable thrust load, auxiliary methods of carrying thrust are required.

Unified SAF

USAF, SAF-XT, SAFS, USDAF

Table 2: Selection table for Unified SAF pillow blocks

Shaft size				Allowable equivalent radial load rating (lbs) at various revolutions per minute														
Adapter mount (in)	Direct mount (mm)	Bearing series	L_{10} life hours	50	100	250	500	750	950	1300	1500	1800	2000	2600	3000	3200	3400	4500	5600
—	40	22308	10,000	12797	10394	7896	6413	5679	5290	4815	4613	4367	4231	3911	3747	3675	3609	3318	—
			30,000	9204	7476	5679	4613	4084	3805	3463	3318	3141	3043	2813	2695	2643	2595	2386	—
			60,000	7476	6072	4613	3747	3318	3090	2813	2695	2551	2472	2285	2189	2147	2108	1938	—
1-7/16	—	22209	10,000	8831	7173	5449	4426	3919	3651	3323	3183	3014	2920	2699	2586	2536	2490	2290	2144
			30,000	6352	5159	3919	3183	2819	2626	2390	2290	2168	2100	1941	1860	1824	1791	1647	1542
			60,000	5159	4191	3183	2586	2290	2133	1941	1860	1761	1706	1577	1511	1,82	1455	1338	1253
	45	22309	10,000	15320	12444	9453	7678	6799	6333	5765	5522	5228	5066	4682	4485	4399	4320	3972	—
			30,000	11018	8950	6799	5522	4890	4555	4146	3972	3760	3643	3368	3226	3164	3107	2857	—
			60,000	8950	7269	5522	4485	3972	3700	3368	3226	3054	2959	2735	2620	2570	2524	2320	—
1-11/16	—	22210	10,000	9372	7613	5783	4697	4159	3874	3527	3378	3199	3099	2864	2744	2691	2643	2430	2275
			30,000	6741	5475	4159	3378	2991	2787	2536	2430	2300	2229	2060	1974	1936	1901	1748	1637
			60,000	5475	4447	3378	2744	2430	2263	2060	1974	1869	1810	1673	1603	1572	1544	1419	1329
	50	22310	10,000	18384	14932	11343	9214	8158	7600	6917	6627	6274	6079	5619	5383	5279	5184	—	—
			30,000	13222	10740	8158	6627	5868	5466	4975	4766	4512	4372	4041	3871	3797	3729	—	—
			60,000	10740	8723	6627	5383	4766	4440	4041	3871	3665	3551	3282	3144	3084	3029	—	—
1-15/16	—	22211	10,000	11355	9223	7006	5691	5039	4694	4273	4093	3875	3755	3470	3325	3261	3202	2944	2757
			30,000	8167	6633	5039	4093	3624	3376	3073	2944	2787	2700	2496	2391	2345	2303	2117	1983
			60,000	6633	5388	4093	3325	2944	2742	2496	2391	2264	2193	2027	1942	1905	1871	1720	1611
	55	22311	10,000	21628	17567	13345	10840	9598	8941	8138	7796	7381	7152	6610	6332	6211	6099	—	—
			30,000	15555	12635	9598	7796	6903	6431	5853	5607	5309	5144	4754	4554	4467	4387	—	—
			60,000	12635	10263	7796	6332	5607	5223	4754	4554	4312	4178	3862	3699	3628	3563	—	—
—	60	22312	10,000	25052	20349	15458	12556	11118	10357	9427	9031	8550	8284	7657	7335	7194	7065	—	—
			30,000	18018	14635	11118	9031	7996	7449	6780	6495	6149	5958	5507	5276	5174	5081	—	—
			60,000	14635	11888	9031	7335	6495	6050	5507	5276	4995	4839	4473	4285	4203	4127	—	—
2-3/16	—	22213	10,000	16401	13322	10120	8220	7279	6780	6171	5912	5597	5423	5013	4802	4710	4625	4252	—
			30,000	11796	9581	7279	5912	5235	4877	4439	4252	4026	3901	3605	3454	3388	3327	3058	—
			60,000	9581	7783	5912	4802	4252	3961	3605	3454	3270	3168	2928	2805	2752	2702	2484	—
	65	22313	10,000	28116	22838	17349	14092	12478	11623	10580	10135	9596	9297	8593	8232	8074	7929	—	—
			30,000	20222	16425	12478	10135	8974	8360	7609	7289	6901	6687	6180	5921	5807	5703	—	—
			60,000	16425	13342	10135	8232	7289	6790	6180	5921	5606	5431	5020	4809	4717	4632	—	—
—	70	22314	10,000	31180	25326	19239	15627	13837	12890	11732	11239	10641	10310	9530	9129	8954	—	—	—
			30,000	22426	18215	13837	11239	9952	9271	8438	8084	7653	7415	6854	6566	6440	—	—	—
			60,000	18215	14795	11239	9129	8084	7530	6854	6566	6217	6023	5567	5333	5231	—	—	—
2-7/16 2-1/2	75	22215	10,000	17302	14054	10676	8672	7679	7153	6511	6237	5905	5721	5288	5066	4969	4879	—	—
			30,000	12444	10108	7679	6237	5523	5145	4683	4486	4247	4115	3803	3644	3574	3509	—	—
			60,000	10108	8210	6237	5066	4486	4179	3803	3644	3450	3342	3089	2959	2903	2850	—	—
	75	22315	10,000	36047	29279	22242	18066	15997	14902	13564	12994	12302	11919	11017	10554	—	—	—	—
			30,000	25926	21058	15997	12994	11505	10718	9755	9345	8848	8573	7924	7591	—	—	—	—
			60,000	21058	17105	12994	10554	9345	8706	7924	7591	7187	6963	6436	6166	—	—	—	—
2-11/16 2-3/4	80	22216	10,000	20186	16396	12456	10117	8958	8345	7596	7276	6889	6675	6170	5910	5797	5692	—	—
			30,000	14518	11793	8958	7276	6443	6002	5463	5233	4955	4801	4437	4251	4169	4094	—	—
			60,000	11793	9579	7276	5910	5233	4875	4437	4251	4025	3899	3604	3453	3387	3325	—	—
	80	22316	10,000	40372	32793	24911	20234	17917	16690	15191	14553	13778	13350	12339	11821	—	—	—	—
			30,000	29037	23585	17917	14553	12886	12004	10926	10467	9910	9601	8875	8502	—	—	—	—
			60,000	23585	19157	14553	11821	10467	9750	8875	8502	8049	7799	7208	6905	—	—	—	—

Note: Dark shaded areas require circulating oil.
Light shaded areas require static oil.

Unified SAF

USAF, SAF-XT, SAFS, USDAF

Table 2: Selection table for Unified SAF pillow blocks

Shaft size				Allowable equivalent radial load rating (lbs) at various revolutions per minute															
Adapter mount (in)	Direct mount (mm)	Bearing series	L_{10} life hours	50	100	250	500	750	950	1300	1500	1800	2000	2600	3000	3200	3400	4500	5600
2-15/16 3	85	22217	10,000	24512	19910	15125	12285	10878	10133	9223	8836	8365	8105	7492	7177	7039	6912	—	—
			30,000	17629	14320	10878	8836	7824	7288	6634	6355	6017	5829	5388	5162	5063	4971	—	—
			60,000	14320	11631	8836	7177	6355	5920	5388	5162	4887	4735	4377	4193	4112	4038	—	—
	85	22317	10,000	43977	35720	27135	22041	19516	18180	16548	15852	15008	14541	13441	—	—	—	—	—
			30,000	31629	25691	19516	15852	14037	13076	11901	11401	10794	10459	9667	—	—	—	—	—
			60,000	25691	20868	15852	12876	11401	10621	9667	9261	8768	8495	7852	—	—	—	—	—
3-3/16	90	22218	10,000	28116	22838	17349	14092	12478	11623	10580	10135	9596	9297	8593	8232	8074	7929	—	—
			30,000	20222	16425	12478	10135	8974	8360	7609	7289	6901	6687	6180	5921	5807	5703	—	—
			60,000	16425	13342	10135	8232	7289	6790	6180	5921	5606	5431	5020	4809	4717	4632	—	—
3-7/16 3-1/2	100	22220	10,000	34785	28254	21464	17434	15437	14380	13089	12539	11871	11502	10631	10185	—	—	—	—
			30,000	25018	20321	15437	12539	11103	10343	9414	9018	8538	8273	7646	7325	—	—	—	—
			60,000	20321	16506	12539	10185	9018	8401	7646	7325	6935	6719	6211	5950	—	—	—	—
	100	22320	10,000	65966	53581	40703	33061	29275	27270	24821	23778	22513	21812	—	—	—	—	—	—
			30,000	47444	38536	29275	23778	21055	19613	17852	17102	16192	15688	—	—	—	—	—	—
			60,000	38536	31301	23778	19314	17102	15931	14500	13891	13152	12742	—	—	—	—	—	—
3 -15/16 4	110	22222	10,000	43977	35720	27135	22041	19516	18180	16548	15852	15008	14541	1441	—	—	—	—	—
			30,000	31629	25691	19516	15852	14037	13076	11901	11401	10794	10459	9667	—	—	—	—	—
			60,000	25691	20868	15852	12876	11401	10621	9667	9261	8768	8495	7852	—	—	—	—	—
	110	22322	10,000	76419	62072	47153	38300	33914	31592	28755	27546	26080	—	—	—	—	—	—	—
			30,000	54962	44643	33914	27546	24391	22722	20681	19812	18758	—	—	—	—	—	—	—
			60,000	44643	36262	27546	22375	19812	18456	16798	16092	15236	—	—	—	—	—	—	—
4-3/16	120	22224	10,000	51547	41869	31806	25835	22876	21310	19396	18581	17592	17045	—	—	—	—	—	—
			30,000	37074	30113	22876	18581	16453	15326	13950	13364	12652	12259	—	—	—	—	—	—
			60,000	30113	24460	18581	15092	13364	12449	11331	10855	10277	9957	—	—	—	—	—	—
	120	22324	10,000	86512	70270	53381	43359	38393	35764	32553	31185	29525	—	—	—	—	—	—	—
			30,000	62222	50540	38393	31185	27613	25723	23413	22429	21235	—	—	—	—	—	—	—
			60,000	50540	41051	31185	25330	22429	20893	19017	18218	17248	—	—	—	—	—	—	—
4-7/16 4-1/2	130	22226	10,000	61279	49774	37812	30712	27195	25333	23058	22089	20913	20263	—	—	—	—	—	—
			30,000	44074	35799	27195	22089	19559	18220	16584	15887	15041	14573	—	—	—	—	—	—
			60,000	35799	29078	22089	17942	15887	14799	13470	12904	12217	11837	—	—	—	—	—	—
	130	22326	10,000	100931	81981	62278	50585	44792	41725	37978	36382	—	—	—	—	—	—	—	—
			30,000	72592	58963	44792	36382	32215	30010	27315	26167	—	—	—	—	—	—	—	—
			60,000	58963	47893	36382	29551	26167	24375	22186	21254	—	—	—	—	—	—	—	—
4-15/16 5	140	22228	10,000	70652	57387	43594	35410	31354	29208	26585	25467	24112	23362	—	—	—	—	—	—
			30,000	50814	41274	31354	25467	22551	21007	19120	18317	17342	16802	—	—	—	—	—	—
			60,000	41274	33525	25467	20686	18317	17063	15530	14878	14086	13648	—	—	—	—	—	—
	140	22328	10,000	117152	95157	72287	58715	51990	48431	44082	42229	—	—	—	—	—	—	—	—
			30,000	84258	68439	51990	42229	37393	34833	31705	30372	—	—	—	—	—	—	—	—
			60,000	68439	55590	42229	34301	30372	28293	25752	24670	—	—	—	—	—	—	—	—
5-3/16	150	22230	10,000	82187	66756	50712	41191	36473	33976	30925	29625	28049	27176	—	—	—	—	—	—
			30,000	59111	48013	36473	29625	26232	24436	22242	21307	20173	19545	—	—	—	—	—	—
			60,000	48013	38998	29625	24063	21307	19849	18066	17307	16386	15876	—	—	—	—	—	—
	150	22330	10,000	131571	106869	81184	65942	58389	54392	49507	—	—	—	—	—	—	—	—	—
			30,000	94629	76862	58389	47427	41995	39120	35607	—	—	—	—	—	—	—	—	—
			60,000	76862	62432	47427	38522	34110	31775	28922	—	—	—	—	—	—	—	—	—

Note: Dark shaded areas require circulating oil.
Light shaded areas require static oil.

Unified SAF

USAF, SAF-XT, SAFS, USDAF

Table 2: Selection table for Unified SAF pillow blocks

Shaft size			L_{10} life hours	Allowable equivalent radial load rating (lbs) at various revolutions per minute															
Adapter mount (in)	Direct mount (mm)	Bearing series		50	100	250	500	750	950	1300	1500	1800	2000	2600	3000	3200	3400	4500	5600
5-7/16 5-1/2	160	22232	10,000	93722	76126	57829	46972	41592	38745	35265	33783	31985	—	—	—	—	—	—	—
			30,000	67407	54751	41592	33783	29914	27866	25364	24298	23004	—	—	—	—	—	—	—
			60,000	54751	44472	33783	27441	24298	22634	20602	19736	18685	—	—	—	—	—	—	—
	160	22332	10,000	117152	95157	72287	58715	51990	48431	44082	—	—	—	—	—	—	—	—	—
			30,000	84258	68439	51990	42229	37393	34833	31705	—	—	—	—	—	—	—	—	—
			60,000	68439	55590	42229	34301	30372	28293	25752	—	—	—	—	—	—	—	—	—
5-15/16 6	170	22234	10,000	108140	87837	66726	54199	47991	44706	40691	38981	—	—	—	—	—	—	—	—
			30,000	77777	63175	47991	38981	34516	32153	29266	28036	—	—	—	—	—	—	—	—
			60,000	63175	51314	38981	31662	28036	26117	23771	22772	—	—	—	—	—	—	—	—
	170	22334	10,000	129768	105405	80071	65038	57589	53647	48829	—	—	—	—	—	—	—	—	—
			30,000	93332	75809	57589	46777	41420	38584	35119	—	—	—	—	—	—	—	—	—
			60,000	75809	61576	46777	37995	33643	31340	28525	—	—	—	—	—	—	—	—	—
6-7/16 6-1/2	180	22236	10,000	109943	89301	67838	55102	48791	45451	41369	39631	—	—	—	—	—	—	—	—
			30,000	79073	64227	48791	39631	35092	32689	29753	28503	—	—	—	—	—	—	—	—
			60,000	64227	52169	39631	32190	28503	26552	24167	23152	—	—	—	—	—	—	—	—
6-15/16 7	190	22238	10,000	109943	89301	67838	55102	48791	45451	41369	—	—	—	—	—	—	—	—	—
			30,000	79073	64227	48791	39631	35092	32689	29753	—	—	—	—	—	—	—	—	—
			60,000	64227	52169	39631	32190	28503	26552	24167	—	—	—	—	—	—	—	—	—
	190	22338	10,000	147597	121508	92305	72975	66388	61843	—	—	—	—	—	—	—	—	—	—
			30,000	107591	87391	66388	53923	47747	44479	—	—	—	—	—	—	—	—	—	—
			60,000	87391	70984	53923	43799	38783	36128	—	—	—	—	—	—	—	—	—	—
7-3/16	200	22240	10,000	122919	99842	75845	61606	54550	50815	—	—	—	—	—	—	—	—	—	—
			30,000	88407	71808	54550	44308	39233	36548	—	—	—	—	—	—	—	—	—	—
			60,000	71808	58327	44308	35989	31867	29686	—	—	—	—	—	—	—	—	—	—
7-1/2 7-15/16 8	220	22244	10,000	148873	120923	91860	74613	66068	61545	—	—	—	—	—	—	—	—	—	—
			30,000	107073	86970	66068	53664	47517	44264	—	—	—	—	—	—	—	—	—	—
			60,000	86970	70642	53664	43588	38596	35954	—	—	—	—	—	—	—	—	—	—
8-7/16 8 -1/2 8-15/16, 9		23048	10,000	109222	88716	67393	54741	48471	45153	—	—	—	—	—	—	—	—	—	—
			30,000	78555	63806	48471	39371	34861	32475	—	—	—	—	—	—	—	—	—	—
			60,000	63806	51827	39371	31979	28316	26378	—	—	—	—	—	—	—	—	—	—
9-7/16 9-1/2		23052	10,000	135175	109797	83408	67748	59989	55882	—	—	—	—	—	—	—	—	—	—
			30,000	97221	78968	59989	48726	43145	40192	—	—	—	—	—	—	—	—	—	—
			60,000	78968	64142	48726	39578	35045	32646	—	—	—	—	—	—	—	—	—	—
9-15/16 10 10-7/16 10-1/2		23056	10,000	144187	117116	88968	72265	63988	—	—	—	—	—	—	—	—	—	—	—
			30,000	103703	84233	63988	51974	46022	—	—	—	—	—	—	—	—	—	—	—
			60,000	84233	68418	51974	42216	37381	—	—	—	—	—	—	—	—	—	—	—

Note: Dark shaded areas require circulating oil.
Light shaded areas require static oil.

Unified SAF

USAF, SAF-XT, SAFS, USDAF

Sealing systems

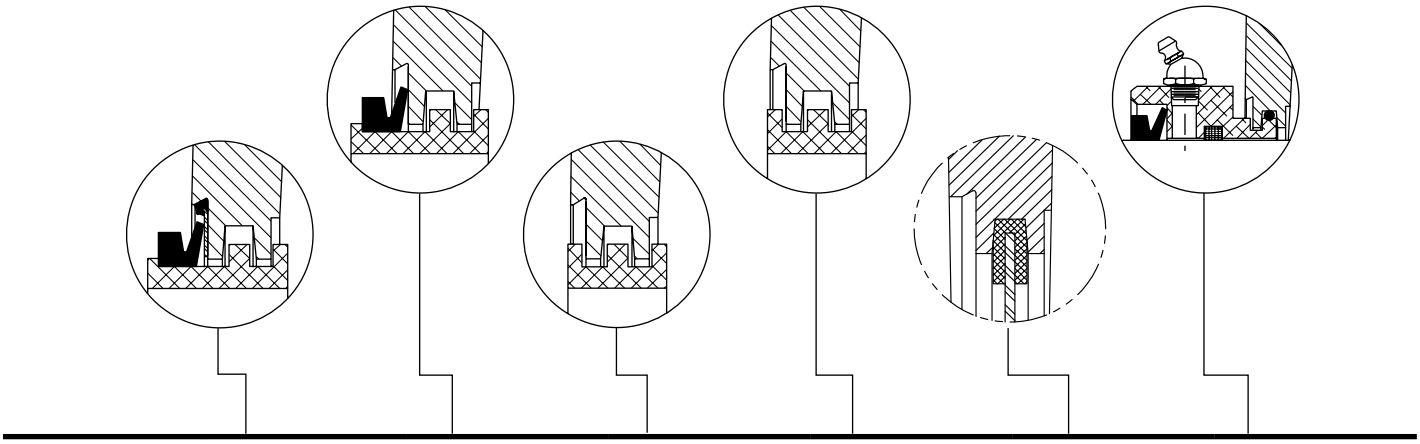

Drop-in Triple-Tect seal | **Triple-Tect labyrinth and face-rubbing seal** | **Split LER labyrinth seal** | **LER labyrinth seal** | **End cover** | **Auxiliary taconite seal**

Environment/ application	USAF/USN SAF-XT	USAF/USN SAF-XT	USAF/USN SAF-XT	USAF/USN SAF-XT	USAF/USN SAF-XT	USAF/USN SAF-XT
Dusty/dirty	+	+	▲	▲	++	+
Wet/moisture laden	+	+	○	○	++	+
High pressure power washdown	▲	▲	○	○	++	+
✪ High temperature	○	○	○	+	▲	○
★ High speed	+	+	+	++	NS	○
Chemical	▲	▲	○	○	▲	▲
Misalignment	+	+	+	+	NS	▲

Notes: ++ Very Good
+ Good
▲ Questionable (Depends on condition. Consult Application Engineering)
✪ High temperature is above 200 °F
★ Consideration of high speed can be a function of type and bearing design
○ Not recommended
NS Not seal limited

Drop-in Triple-Tect seal

The patented drop-in Triple-Tect seal has all the sealing features of the standard Triple-Tect, but is pre-assembled at the factory for a fast, easy installation on-site. The drop-in Triple-Tect seal assembly consists of a seal ring, V-ring seal and stainless metal seal with rubber bead.

While lowering the shaft bearing and seal assembly into the housing base, the stainless metal seal with rubber bead fits in the outboard “V-shaped” housing groove.

The stainless metal seal gives superior sealing surface to the V-ring and positions the V-ring for easy cap to base housing assembly.



Unified SAF

USAF, SAF-XT, SAFS, USDAF

Selecting lubrication

Unified SAF pillow blocks are lubricated upon installation by the user and designed to handle either grease or oil lubrication.

Grease lubrication

Unified SAF bearings are designed to meet the rigorous demands of dirty, dusty, or wet environments. In order to properly protect bearings during installation, pack the bearing insert 100 percent full of grease immediately after properly mounting the bearing on the shaft. If the rpm of the application falls between 20 percent and 80 percent of maximum rpm (Table 1), pack the lower half of the housing one-third to one-half full. If the rpm of the application is less than 20 percent of maximum rpm, pack bearing housing cavity 100 percent full. If the rpm exceeds 80 percent of maximum rpm, do not add grease in the lower half of the housing or in the cap.

At each re-greasing cycle, for applications up to 80 percent of maximum rpm, slowly add grease until fresh grease is seen purging at the seals. Re-greasing should be done while running. Remote re-greasing lines should be added to avoid endangering personnel. If the rpm is greater than 80 percent of maximum rpm, add 4 strokes of a handgun at each re-greasing cycle for bores up to 2 inches. For bores greater than 2 inches up to 5 inches, add 8 strokes of a handgun at each re-greasing cycle. For bores greater than 5 inches up to 10-1/2 inches, add 16 strokes of a handgun at each re-greasing cycle. For bores greater than 10-1/2 inches up to 12-1/2 inches, add 32 strokes of a handgun at each re-greasing cycle. For bores greater than 12-1/2 inches up to 15-3/4 inches, add 64 strokes of a handgun at each regreasing cycle. For units running above 80 percent of maximum rpm, running temperature should be monitored. If a drastic change in running temperature is noted, Dodge recommends removing the used grease completely and recharging with fresh grease per the above instructions.

Select a grease with a viscosity at an operating temperature which will provide full film lubrication (see Table 3 below). Use a 50 °F to 100 °F increase in bearing temperature above ambient, depending on rpm and load. Use Table 4 as a general guide for re-greasing the bearings. A small amount of grease at frequent intervals is preferable to a large amount of grease at infrequent intervals. For special applications involving high speeds, high loads, or very low speeds, consult Application Engineering at +1 864 284 5700.

Table 3: Viscosity of oil, or oil in grease

dN Δ	Viscosity for loads up to 18% of dynamic capacity (SUS at operating temperature)	CST	dN Δ	Viscosity for loads up to 18% of dynamic capacity (SUS at operating temperature)	CST
100	3500	700	1400	625	140
200	3150	680	1600	525	120
300	2750	590	1800	450	95
400	2375	500	2000	400	85
500	2000	460	3000	300	63
600	1750	360	4000	200	43
700	1500	320	5000	150	32
800	1300	280	6000	130	28
900	1075	220	7000	110	22
1000	900	140	8000	100	20

Δ dN = Bore diameter (ins) x rpm.

* For loads above 18% of dynamic capacity, an EP grease with viscosity selected from above is recommended.

Oil lubrication

Unified SAF bearings are designed to accept oil lubrication. Oil lubrication is normally required at high speeds as well as high loads, or whenever heat from an external source is flowing into the bearing. Oil lubrication may be static or circulating. With static oil, fill the bearing cavity with oil up to the center line of the lowest roller. This height is identified as "W" on the dimension drawings. Mount an oil sight gauge in the drilled and tapped hole on the side of the pillow block for visual indication of this level. The oil level may drop or rise during operation depending on the direction of rotation of the bearing. Both the static oil level and the running oil level should be marked on the oil sight gauge and properly identified. Oil should be replaced at least semiannually. For circulating oil, the oil flow rate and size of factory drilled and tapped return drains are shown in Table 5, up to 8 inch bore. The viscosity of the oil should be selected based on the guidelines shown in Table 3. If the rpm of the application is within the specifications of this catalog, and if the temperature of the bearings is 80 °F to 100 °F or greater above ambient, a lighter viscosity oil may be required.

Table 4: Re-greasing intervals, months*, based on 12 hours per day, 150 °F max.

Shaft size		Rpm								
Adapter mounting (in)	Direct mounting (mm)	250	500	750	1000	1250	1500	2000	2500	3000
1-7/16 —1-15/16	40—55	8	6	4	3	2	1	0.50	0.50	0.25
2-3/16	60—65	7	5	3	2	1	1	0.50	0.25	0.25
2-7/16 —3	70—85	6	4	3	2	1	0.50	0.25	0.25	—
3-3/16 —3-1/2	90—100	5	3	2	1	0.50	0.50	0.25	—	—
3-15/16 — 4-1/2	110—130	4	3	2	1	0.50	0.25	—	—	—
4-15/16 —5-1/2	140—160	3	2	1	0.50	0.25	—	—	—	—
5-15/16 —7-3/16	170—200	2	1	1	0.50	—	—	—	—	—
7-1/2 —9-1/2	220	1	1	0.50	—	—	—	—	—	—
9-15/16 —10-1/2	—	1	0.50	—	—	—	—	—	—	—
10-15/16 —12-1/2	—	1	0.50	—	—	—	—	—	—	—
12-15/16 —15-3/4	—	0.50	0.25	—	—	—	—	—	—	—

* For continuous operations, 24 hours per day, decrease greasing interval by 50%

Unified SAF

Circulating oil

Table 5: Circulating oil flow rates, drain hole sizes, thermocouple location and vibration sensor location

Shaft size								Circulating oil flow*		Static Oil level (in) W**		Drain hole, Dry sump ***			Thermocouple hole		Vibration ▲ sensor hole	
500 Adapter mounting (in)	200 Direct mounting (mm)	600 Adapter mounting (in)	300 Direct mounting (mm)	USAF housing designation				Amount sufficient for normal lubrication	Maximum amount for heat dissipation due to external heat source	500 and 200 series	600 and 300 series	Location (in)			Location (in)	Wall thick. (in)	Location (in)	Wall thick. (in)
								Gal/min	Gal/min			X	Y	Size	A	B	C	E
1-7/16	—	—	—	509	—	—	—	.0025	.070	0.92	—	1.09	0.63	1-8/27	0.25	0.38	1.56	1.31
1-11/16	—	—	40	510	—	—	308	.0030	.090	1.09	1.19	1.35	1.18	1-8/27	0.27	0.30	1.14	0.97
1-15/16	—	1-7/16	45	511	—	609	309	.0040	.100	1.16	1.28	1.31	0.83	1-8/27	0.28	0.53	1.89	1.13
—	—	1-11/16	50	—	—	610	310	.0045	.120	—	1.38							
2-3/16	—	1-15/16	55	513	—	611	311	.0050	.150	1.11	1.44	1.66	0.78	1-8/27	0.34	0.58	2.02	1.13
2-7/16 2-1/2	75	—	60	515	215	—	312	.0060	.175	1.16	1.31	1.78	0.88	1/4-18	0.36	0.63	2.25	1.19
2-11/16 2-3/4	80	2-3/16	65	516	216	613	313	.0065	.195	1.25	1.41	1.97	0.95	1/4-18	0.31	0.50	2.28	1.52
2-15/16 3	85	—	70	517	217	—	314	.0075	.200	1.38	1.47	2.13	1.06	3/8-18	0.41	0.67	2.50	1.44
3-3/16	90	2-7/16 2-1/2	75	518	218	615	315	.0080	.250	1.47	1.59	2.25	1.13	3/8-18	0.44	0.61	2.72	1.45
—	—	2-11/16 2-3/4	80	—	—	616	316	.0100	.260	1.69	1.69	2.28	1.17	3/8-18	0.53	0.66	2.73	1.47
3-7/16 3-1/2	100	2-15/16 3	85	520	220	617	317	.0110	.350	1.64	1.75	2.63	1.25	3/8-18	0.53	0.70	3.08	1.67

* Based on oil temperature of 130 °F - 150 °F and oil level at center line of lowest roller. For maximum oil flow values, both drains should be used.
Mount block with drain holes on right side of block center line when rotation is CCW, unless cast closed end.
Mount block with drain holes on left side of block center line when rotation is CW.

** Static oil level is measured from bottom of block base to meniscus on oil sight gauge. (Non-rotating mode)

*** For wet sump, consult Application Engineering.

▲ For vibration sensors supplied by the user.

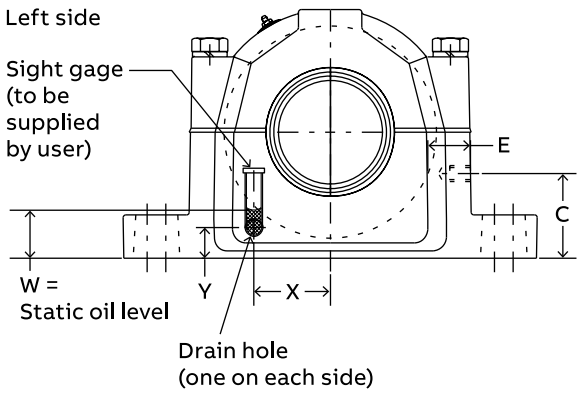

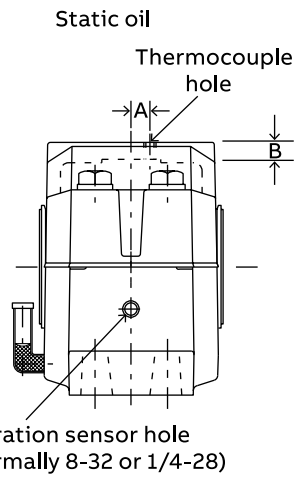

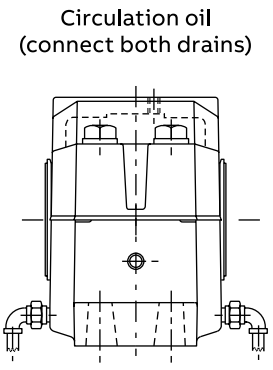

Unified SAF
Circulating oil

Table 5: Circulating oil flow rates, drain hole sizes, thermocouple location and vibration sensor location (continued)

Shaft size								Circulating oil flow*		Static Oil level (in) W**		Drain hole, Dry sump ***			Thermocouple hole		Vibration ▲ sensor hole	
500 Adapter mounting (in)	200 Direct mounting (mm)	600 Adapter mounting (in)	300 Direct mounting (mm)	USAF housing designation				Amount sufficient for normal lubrication	Maximum amount for heat dissipation due to external heat source	500 and 200 series	600 and 300 series	Location (in)			Location (in)	Wall thick. (in)	Location (in)	Wall thick. (in)
								Gal/min	Gal/min			X	Y	Size	A	B	C	E
3-15/16 4	110	—	—	522	222	—	—	0.015	0.42	1.80	—	2.88	1.34	3/8-18	0.53	0.53	3.36	1.72
4-3/16	120	3-7/16 3-1/2	100	524	224	620	320	0.0175	0.48	1.84	2.03	2.19	1.38	1/2-14	0.69	0.77	3.38	1.86
4-7/16 4-1/2	130	3-15/16 4	110	526	226	622	322	0.019	0.55	2.34	2.41	2.31	1.63	1/2-14	0.75	1.00	4.03	2.16
4-15/16 5	140	—	—	528	228	—	—	0.023	0.6	2.03	—	3.68	1.47	1/2-14	0.75	0.89	4.03	2.16
5-3/16	150	4-3/16	120	530	230	624	324	0.025	0.75	2.03	2.38	3.59	1.36	1/2-14	0.81	0.88	4.34	2.25
5-7/16 5-1/2	160	4-7/16 4-1/2	130	532	232	626	326	0.03	0.8	2.09	2.44	4.03	1.33	1/2-14	0.91	0.92	4.52	2.22
5-15/16 6	170	4-15/16 5	140	534	234	628	328	0.035	0.85	2.19	2.56	4.16	1.33	1/2-14	1.00	1.39	4.97	2.70
6-7/16 6-1/2	180	5-3/16	150	536	236	630	330	0.037	0.875	2.42	2.63	4.22	1.63	1/2-14	1.00	1.33	5.25	2.75
6-15/16 7	190	5-7/16 5-1/2	160	538	238	632	332	0.039	1	2.53	2.69	4.75	1.61	1/2-14	1.13	1.25	5.50	2.75
7-3/16	200	5-15/16 6	170	540	240	634	334	0.042	1	2.47	2.75	4.91	1.53	1/2-14	1.13	1.25	5.81	2.84
7-1/2	220	6-15/16 7	190	544S	244	638	338	0.05	1.4	3.25	2.38	5.44	2.03	1/2-14	1.19	1.50	6.63	2.36
7-15/16 8		—		544														

Mount block with drain holes on right side of block center line when rotation is CCW, unless cast closed end.

Mount block with drain holes on left side of block center line when rotation is CW.

** Static oil level is measured from bottom of block base to meniscus on oil sight gauge. (Non-rotating mode)

*** For wet sump, consult Application Engineering.

▲ For vibration sensors supplied by the user.

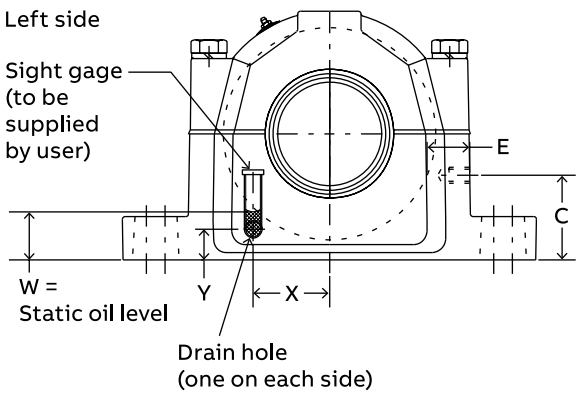

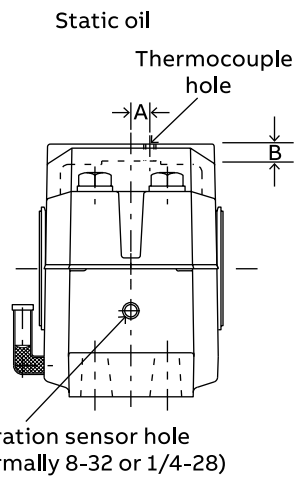

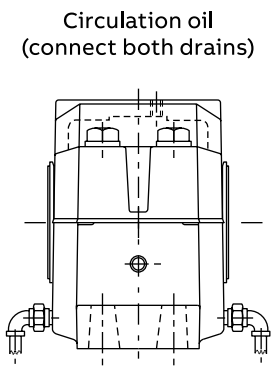

Unified SAF

Housing ratings

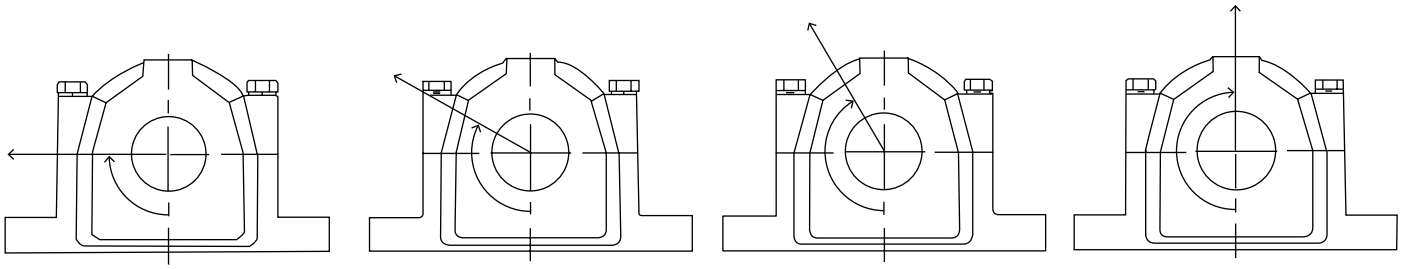

Table 6: USAF housing ratings and cap bolt ratings*

Pillow block designation				Recommended housing cap loads ⋆				Recommended cap bolt loads			Cap bolt information ⋆		
USAF	USAF	USAF	USAF	P90 (lb)	P120 (lb)	P150 (lb)	P180 (lb)	P120 (lb)	P150 (lb)	P180 (lb)	Cap bolt (no.) size	Torque (ft-lb)	SAE grade
509	—	—	—	6600	4200	3600	4600	19800	11300	9900	(4) 3/8-16	24-30	5
510	—	—	308	7800	5000	4400	5400	19800	11300	9900	(4) 3/8-16	24-30	5
511	—	610	310	11400	7165	6575	7875	27120	15600	13560	(4)7/16-14	40-50	5
513	—	611	311	13360	8260	7680	9200	27120	15600	13560	(4) 7/16-14	40-50	5
515	215	—	312	13360	8260	7680	9220	36200	20800	18100	(4) 1/2-13	60-75	5
516	216	613	313	12800	8000	7400	8900	57600	33000	28800	(4) 5/8-11	120-150	5
517	217	—	314	13600	9200	8400	10200	57600	33000	28800	(4) 5/8-11	120-150	5
518	218	615	315	17500	11350	10200	12100	57600	33000	28800	(4) 5/8-11	120-150	5
—	—	616	316	17600	12000	10500	12200	57600	33000	28800	(4) 5/8-11	120-150	5
520	220	617	317	22500	14200	12660	14700	85200	48900	42600	(4) 3/4-10	208-260	5
522	222	—	—	28100	17500	15500	17800	85200	48900	42600	(4) 3/4-10	208-260	5
524	224	620	320	24500	15400	13700	15800	85200	48900	42600	(4) 3/4-10	208-260	5
526	226	622	322	28970	18000	15900	18300	11800	67800	59000	(4) 7/8-9	320-430	5
528	228	—	—	35800	22100	19400	22300	154400	88700	77200	(4) 1-8	512-640	5
530	230	624	324	40000	24700	21600	25000	154400	88700	77200	(4) 1-8	512-640	5
532	232	626	326	40200	24800	21700	25100	154400	88700	77200	(4) 1-8	512-640	5
534	234	628	328	52000	32200	28200	33000	154400	88700	77200	(4) 1-8	512-640	5
536	236	630	330	78200	49200	43300	52800	154400	88700	77200	(4) 1-8	512-640	5
538	238	632	332	80600	50800	44800	54800	215200	123000	107600	(4) 1-1/4-7	896-1120	5
540	240	634	334	83800	53000	46700	57500	215200	123000	107600	(4) 1-1/4-7	896-1120	5
544	244	638	338	101800	65600	58200	73800	312000	179000	156000	(4) 1-1/2-6	1560-1950	5
048	—	—	—	83800	53000	46700	54800	215200	123000	107600	(4) 1-1/4-7	896-1120	5
052	—	—	—	101800	65600	58200	73800	312000	179000	156000	(4) 1-1/2-6	1560-1950	5
056	—	—	—	110200	71800	64000	82100	312000	179000	156000	(4) 1-1/2-6	1560-1950	5

* When utilizing heavy cap loads on pillow block housings, the installation must adhere to the following procedures.

1) The pillow block base bolts must have high strength (Grade 8) bolts and be properly tightened to mounting structure.

2) Stop bars (shear strips) must be used against the pillow block where side loads are encountered.

3) In all cases where loads are heavy, the L_{10} life of the bearing should be checked for proper selection and life requirements.

⋆ For USDAF housing and cap bolt ratings consult Application Engineering at +1 864 284 5700.

Unified SAF

USAF, SAF-XT, SAFS, USDAF

Expansion capabilities

Table 7: Unified 500, 200, 600 and 300 series and Split-Sphere pillow blocks total expansion capability

Shaft size								
500 Adapter mounting (in)	200 Direct mounting (mm)	600 Adapter mounting (in)	300 Direct mounting (mm)	USAF housing designation				Total expansion (in)
1-7/16	—	—	—	509	—	—	—	1/4
1-11/16	—	—	40	510	—	—	308	1/4
1-15/16	—	1-7/16	45	511	—	609	309	1/4
—	—	1-11/16	50	-	—	610	310	7/16
2-3/16	—	1-15/16	55	513	—	611	311	5/16
2-7/16 2-1/2	75	—	60	515	215	—	312	1/4
2-11/16 2-3/4	80	2-7/16	65	516	216	613	313	3/8
2-15/16 3	85	—	70	517	217	—	314	3/8
3-3/16	90	2-7/16 2-1/2	75	518	218	615	315	3/8
—	—	2-11/16 2-3/4	80	—	—	616	316	3/8
3-7/16 3-1/2	100	2-15/16 3	85	520	220	617	317	3/8
3-15/16, 4	110			522	222			3/8
4-3/16	120	3-7/16 3-1/2	100	524	224	620	320	3/8
4-7/16, 4-1/2	130	3-15/16, 4	110	526	226	622	322	3/8
4-15/16 5	140			528	228			3/8
5-3/16	150	4-3/16	120	530	230	624	324	3/8
5-7/16 5-1/2	160	4-7/16,4-1/2	130	532	232	626	326	3/8
5-15/16 6	170	4-15/16,5	140	534	234	628	328	3/8
6-7/16 6-1/2	180	5-3/16	150	536	236	630	330	3/8
6-15/16 7	190	5-7/16 5-1/2	160	538	238	632	332	3/8
7-3/16	200	5-15/16, 6	170	540	240	634	334	3/8
7-1/2	220	6-15/16 7	190	544S	244	638	338	3/8
7-15/16 8	—	—		544				
8-7/16, 8-1/2 8-15/16, 9	—	—	—	048	—	—	—	5/8
9-7/16, 9-1/2	—	—	—	052	—	—	—	9/16
9-15/16, 10	—	—	—	056	—	—	—	1-5/8
10-7/16 10-1/2	—	—	—	056L	—	—	—	1-5/8

Unified SAF

USAF 600 series

Table 8: Radial and thrust factors for USAF spherical bearings

Shaft size		Bearing series	e	$F_A/F_R \leq e$		$F_A/F_R > e$		Adapter Maximum allowable thrust load lbs †	Dynamic capacity (C) lbs	Static capacity (C_0) lbs	Maximum rpm	
Adapter mounted (in)	Direct mount (mm)			X	Y	X	Y				Grease	Oil
1-11/16	50	22310	0.36	1	1.9	0.67	2.8	1348	51,000	50,000	3400	4300
1-15/16	55	22311	0.36	1	1.9	0.67	2.8	1672	60,000	58,500	3200	4000
	60	22312	0.35	1	1.9	0.67	3	—	69,500	69,500	2800	3600
2-3/16	65	22313	0.34	1	2	0.67	3	2104	78,000	81,500	2600	3400
	70	22314	0.34	1	2	0.67	3	—	86,500	86,500	2400	3200
2-7/16	75	22315	0.34	1	2	0.67	3	2782	100,000	102,000	2200	3000
2-11/16	80	22316	0.34	1	2	0.67	3	3128	112,000	114,000	2200	3000
2-15/16	85	22317	0.33	1	2	0.67	3	3438	122,000	125,000	2000	2800
3-7/16	100	22320	0.34	1	2	0.67	3	4920	183,000	208,000	1700	2200
3-15/16	110	22322	0.33	1	2.1	0.67	3.1	5934	212,000	240,000	1500	1900
4-3/16	120	22324	0.33	1	2.1	0.67	3.1	6959	240,000	265,000	1400	1800
4-7/16	130	22326	0.33	1	2.1	0.67	3.1	8152	280,000	310,000	1300	1700
4-15/16	140	22328	0.34	1	2	0.67	3	9628	325,000	365,000	1200	1600
5-3/16	150	22330	0.33	1	2	0.67	3	10923	365,000	415,000	1100	1500
5-7/16	160	22332	0.37	1	1.8	0.67	2.7	12298	325,000	365,000	1000	1400
5-15/16	170	22334	0.37	1	1.8	0.67	2.7	13755	360,000	475,000	950	1300
6												
6-15/16	190	22338	0.28	1	2.4	0.67	3.6	11786	415,000	570,000	1200	1300
7			0.37	1	1.8	0.67	2.7	16910			850	1100

If the thrust load exceeds adapter maximum allowable thrust load, auxiliary methods of carrying thrust are required.

Unified SAF

USDAF large-bore pillow block

Table 9: Radial and thrust factors for USDAF spherical bearings

Shaft size (in)	Bearing series	e	$F_A/F_R \le e$		$F_A/F_R > e$		Adapter Maximum allowable thrust load lbs*	Dynamic capacity (C) lbs	Max rpm	
			X	Y	X	Y			Grease	Oil
23000K Series										
10-15/16, 11	23060K	0.25	1	2.70	0.67	4	23,875	440,000	630	800
11-7/16, 11-1/2, 11-15/16, 12	23064K	0.25	1	2.70	0.67	4.10	26,114	455,000	600	750
12-7/16, 12-1/2	23068K	0.25	1	2.70	0.67	4	30,498	530,000	560	700
12-15/16, 13, 13-7/16, 13-1/2	23072K	0.25	1	2.70	0.67	4.10	32,535	550,000	530	670
13-15/16, 14	23076K	0.24	1	2.80	0.67	4.20	34,598	570,000	500	630
15	23080K	0.24	1	2.80	0.67	4.10	39,926	680,000	450	560
15-3/4	23084K	0.24	1	2.80	0.67	4.20	42,489	710,000	450	560

If the thrust load exceeds adapter maximum allowable thrust load, auxiliary methods of carrying thrust are required.

Table 10: Selection table for USDAF spherical bearings

Shaft size (in)	Bearing series	L_{10} life hours	Allowable equivalent radial load rating (lbs) at various rpm *												
			50	100	150	200	250	300	400	500	550	600	650	700	750
23000K Series															
10-15/16, 11	23060K	50,000	97865	79491	70387	64567	60386	57172	52445	49049	47666	46438	45336	44339	43431
		80,000	84995	69037	61130	56076	52445	49653	45548	42598	41397	40331	39374	38508	37719
		100,000	79491	64567	57172	52445	49049	46438	42598	39840	38717	37719	36824	36015	35277
11-7/16, 11-1/2 11-15/16, 12	23064K	50,000	101201	82201	72786	66768	62445	59121	54233	50721	49291	48021	46882	45851	44912
		80,000	87892	71391	63214	57987	54233	51346	47100	44050	42809	41706	40716	39821	39005
		100.000	82201	66768	59121	54233	50721	46021	44050	41198	40037	39005	38080	37243	36480
12-7/16, 12-1/2	23068K	50,000	117883	95751	84784	77774	72738	68866	63172	59081	57416	55937	54609	53409	—
		80,000	102380	83158	73634	67546	63172	59809	54864	51312	49665	48580	47428	46385	—
		100,000	95751	77774	68866	63172	59081	55937	51312	47989	46636	45435	44357	43381	—
12-15/16, 13 13-7/16, 13-1/2	23072K	50,000	122331	99364	87984	80709	75483	71465	65556	61311	59583	58048	56670	—	—
		80,000	106243	86296	76413	70094	65556	62066	56934	53248	51747	50414	49217	—	—
		100,000	99363	80709	71465	65556	61311	56048	53248	49800	48396	47149	46031	—	—
13-15/16, 14	23076K	50,000	126780	102977	91183	83643	78227	74064	67940	63540	61749	60158	—	—	—
		80,000	110107	89435	79191	72643	67940	64323	59005	55184	53629	52247	—	—	—
		100,000	102977	83643	74064	67940	63540	60158	55184	51611	50156	48864	—	—	—
15	23080K	50,000	151246	122850	108780	99785	93324	88357	81051	75803	73666	—	—	—	—
		80,000	131355	106694	94474	86662	81051	76737	70392	65834	63978	—	—	—	—
		100,000	122850	99785	88357	81051	75803	71768	65834	61571	59835	—	—	—	—
15-3/4	23084K	50,000	157919	128270	113579	104187	97441	92255	84627	79147	76916	—	—	—	—
		80,00	137151	111401	98642	90486	84627	80122	73497	66736	66601	—	—	—	—
		100,000	128270	104187	92255	84627	79147	74934	68738	64287	62475	—	—	—	—

* Oil lubrication to the right of the heavy line.

Unified SAF

USAF 500 series Split-Sphere

Dodge Split-Sphere roller bearings have the capacity to carry heavy radial loads and combined radial and thrust loads. The maximum recommended load which can be applied is limited by various components in the system such as bearing, housing, shaft, shaft attachment, speed and life requirements as listed in this catalog. Dodge spherical roller bearings have been applied successfully even when these limits have been exceeded under controlled operating conditions. Contact Dodge Application Engineering at +1 864 284 5700 for applications which exceed the recommendations of this catalog.

L_{10} hours life – The life which may be expected from at least 90 percent of a given group of bearings operating under identical conditions.

$$L_{10}\text{ life, hours} = \left(\frac{C}{P}\right)^{10/3} \times \left(\frac{16{,}667}{rpm}\right)$$

Where:

C = Dynamic capacity, lbs (Table 11)
P = Equivalent radial load, lbs

(See equation 1 for definition of P)

General

Heavy service – For heavy shock loads, frequent shock loads, or severe vibrations, increase the equivalent radial load up to 50 percent (according to severity of conditions) to obtain a Modified equivalent radial load. Consult Dodge Application Engineering for additional selection assistance.

Thrust load values shown in the table below are recommended as a guide for general applications that will give adequate L_{10} life. Where substantial radial load is also present, it is advisable to calculate actual L_{10} life to assure that the bearing meets the requirements.

Rpm range	20—200	201—2000	Over 2000
Recommended thrust load	C/20	C/40	C/60

The shaft tolerances recommended below are adequate for normal radial and radial/thrust load applications. Since the allowable load, especially at a low speed, is very large, the shaft should be checked to assure adequate shaft strength.

The magnitude and direction of both the thrust and radial load must be taken into account when selecting a housing. When pillow blocks are utilized, heavy loads should be directed through the base. Where uplift loads are involved, see Table 6 for maximum values. Spherical bearings require a radial load at least equal to the thrust load for proper operation. It is advisable to calculate actual L_{10} life to assure adequate conditions (normally at least 30,000 hours life). Where a load pulls the housing away from the mounting base, both the hold-down bolts and housing must be of adequate strength. Auxiliary load carrying devices such as shear bars are advisable for side or end loading of pillow blocks.

Shaft tolerances

Shaft sizes (in)	Tolerance (in)
Up to 1-1/2	+0.000 to -0.002
1-9/16 to 2-1/2	+0.000 to -0.003
2-5/8 to 4	+0.000 to -0.004
4-7/16 to 6	+0.000 to -0.005

* Use the smaller of this value or the maximum allowable thrust load listed in Table 11.

Note: Polyamide cages may limit bearing operating temperature.

Unified SAF

USAF 500 series Split-Sphere

Selecting bearings supporting radial loads only

1. Define the desired L_{10} life in hours

2. Establish bearing radial load, F_R

3. Establish rpm

4. Calculate the equivalent radial load.
($P = F_R \times 1.1^{*}$ = Equivalent radial load)

Using the easy selection Table 12, under the rpm column find the equivalent load that equals or is slightly higher than the application radial load multiplied by a 1.1 factor for the desired life. The shaft size on the far left will be the minimum shaft size that you can use for your application. If the desired life is different than the values shown on the chart, use alternate Method A shown below.

Example:

L_{10} life = 30,000 hours

Radial load = 4,000 lbs

Rpm = 950

At the intersection of the 950 rpm column and the 30,000 hours L_{10} life row, the equivalent radial load of 4,445 lbs exceeds the 4,400 lbs (4000 x 1.1) application equivalent radial load for shaft size 2-7/16— 2-1/2 inches. A Split-Sphere bearing with shaft size of 2-7/16—2-1/2inches may be used for this application.

Alternate method A – Selecting a bearing for an L_{10} life value not shown in the Easy Selection chart.

The L_{10} life equation can be rearranged so that the bearing dynamic capacity C is identified in terms of L_{10}, rpm and P.

$$C = \left(\frac{L_{10} \times rpm}{16{,}667} \right)^{0.3} \times P$$

($P = F_R \times 1.1^{*}$ = Equivalent radial load)

Since the L_{10}, rpm, and F_R are known, solve for C. Select from the dynamic capacity column on Table 11 the C value equal to or just greater than the C value just calculated. The bore size on the far left represents the minimum shaft size selection. Check that the application rpm does not exceed the maximum rpm on Table 12. When selecting an L_{10} life of less than 30,000 hours, particular attention must be given to shaft deflection and proper lubricant selection.

*The application factor, 1.1, compensates for the gaps and relief area on either side of the gaps.

At no time should F_R or P exceed 20 percent of the dynamic capacity C.

Unified SAF

USAF 500 series Split-Sphere

Selecting bearings supporting combination radial and thrust loads

When a bearing supports both a radial load and a thrust load, the loading on the two rows is shared unequally depending on the ratio of thrust to radial load. The use of the X (radial factor) and Y (thrust factor) from Table 11 converts the applied thrust load and radial loads to an equivalent radial load having the same effect on the life of the bearing as a radial load of this magnitude.

Equation 1

The equivalent radial load

$$P = (XF_R + YF_A) \times 1.1\ ^*$$

Where:

P = Equivalent radial load, lbs

F_R = Radial load, lbs

F_A = Thrust (axial) load, lbs (** see note below)

e = Thrust load or radial load factor (Table 11)

X = Radial load factor (Table 11)

Y = Thrust load factor (Table 11)

To find X and Y, calculate F_A/F_R and compare to e for the selected bore size. Determine X and Y from Table 11 depending on whether F_A/F_R is equal to or less than e, or F_A/F_R is greater than e. Substitute all known values into the equivalent radial load equation. P (equivalent radial load) can be used in the life formula to determine L_{10}, or it can be compared to the allowable equivalent radial load ratings for the speed and hours life desired in the easy selection chart.

Selecting bearings supporting only thust loads

Spherical roller bearings generally are not recommended for pure thrust load applications. They will perform satisfactorily under very light pure thrust loads. Consult Dodge Application Engineering at +1 864 284 5700.

Axial expansion capability

The axial expansion capability of Split-Sphere pillow blocks is the same as the Unified 500 pillow blocks. See Table 7.

* The application factor, 1.1, compensates for the gaps and relief area on either side of the gaps.

At no time should F_R or P exceed 20 percent of the dynamic capacity C.

Table 11: Split-Sphere bearings radial and thrust factor

Shaft size (in)	Replaces bearing series	e	$F_A/F_R \le e$		$F_A/F_R > e$		Max. allow. thrust load F_A lbs	Dynamic* capacity (C) lbs	Max. rpm
			X	Y	X	Y			
2-3/16	22213K	0.24	1	2.80	0.67	4.20	1200	35,000	2600
2-7/16	22215K	0.24	1	2.80	0.67	4.20	1200	41,500	2350
2-15/16—3	22217K	0.22	1	3.10	0.67	4.60	1700	45,000	2200
3-3/16	22218K	0.22	1	2.90	0.67	4.60	1700	52,000	2100
3-7/16	22220K	0.23	1	2.80	0.67	4.30	1700	71,000	1700
3-15/16—4	22222K	0.24	1	2.80	0.67	4.20	3100	90,000	1450
4-7/16	22226K	0.25	1	2.70	0.67	4.00	3100	132,000	1200
4-15/16	22228K	0.26	1	2.60	0.67	3.90	3100	153,000	1100
5-7/16	22232K	0.25	1	2.70	0.67	4.00	5000	204,000	1000
5-15/16—6	22234K	0.26	1	2.60	0.67	3.90	5000	232,000	950

* At no time load on a Split-Sphere bearing should exceed 20% of the dynamic capacity C.

Unified SAF

USAF 500 series Split-Sphere

Table 12: Selection table for Split-Sphere spherical roller bearings

Shaft size (in)	L_{10} life hours	Allowable equivalent radial load rating (lbs) at various revolutions per minute													
		50	100	250	375	450	800	950	1100	1200	1300	1700	2100	2350	2600
2-3/16	10,000	7000	7000	7000	6990	6620	5570	5290	5060	4930	4815	4440	4170	4030	3910
	30,000	7000	7000	5680	5030	4760	4005	3805	3640	3545	3465	3195	3000	2900	2810
	50,000	7000	6415	4870	4315	4085	3435	3265	3125	3045	2970	2740	2570	2485	2415
	100,000	6415	5210	3955	3505	3315	2790	2650	2535	2470	2415	2225	2090	2020	1960
2-7/16	10,000	8300	8300	8300	8175	7740	6510	6185	5920	5765	5630	5195	4875	4710	—
	30,000	8300	8300	6640	5880	5565	4685	4445	4255	4145	4050	3735	3505	3390	—
	50,000	8300	7495	5695	5045	4775	4015	3815	3650	3555	3475	3205	3005	2905	—
	100,000	7495	6090	4625	4095	3880	3265	3100	2965	2890	2820	2600	2445	2360	—
2-15/16 3	10,000	9000	9000	9000	8860	8390	7060	705	6415	6250	6105	5630	5285	—	—
	30,000	9000	9000	7200	6375	6035	5080	4820	4615	4495	4390	4050	3800	—	—
	50,000	9000	8130	6175	5470	5175	4355	4135	3960	3855	3765	3475	3260	—	—
	100,000	8130	6605	5015	4440	4205	3540	3360	3215	3135	3060	2820	2650	—	—
3-3/16	10,000	10400	10400	10400	10240	9695	8160	7750	7415	7225	7055	6505	6105	—	—
	30,000	10400	10400	8320	7365	6975	5870	5575	5335	5195	5070	4680	4390	—	—
	50,000	10400	9395	7135	6320	5980	5035	4780	4575	4455	4350	4015	3770	—	—
	100,000	9395	7630	5795	5130	4860	4090	3885	3715	3620	3535	3260	3060	—	—
3-7/16	10,000	14200	14200	14200	13985	13240	11140	10580	10125	9865	9630	8885	—	—	—
	30,000	14200	14200	11355	10055	9520	8010	7610	7280	7095	6925	6390	—	—	—
	50,000	14200	12825	9745	8630	8170	6875	6530	6245	6085	5940	5480	—	—	—
	100,000	12825	10420	7915	7010	6635	5585	5300	5075	4945	4825	4455	—	—	—
3-15/16 4	10,000	18000	18000	18000	17725	16780	14120	13410	12835	12505	12205	—	—	—	—
	30,000	18000	18000	14395	12750	12070	10155	9645	9230	8995	8780	—	—	—	—
	50,000	18000	16260	12350	10935	10355	8715	8275	7920	7715	7530	—	—	—	—
	100,000	16260	13205	10030	8885	8410	7075	6720	6430	6265	6120	—	—	—	—
4-7/16	10,000	26400	26400	26400	25995	24615	20710	19670	18825	18340	—	—	—	—	—
	30,000	26400	26400	21115	18695	17700	14895	14145	13540	13190	—	—	—	—	—
	50,000	26400	23845	18115	16040	15185	12780	12135	11615	11315	—	—	—	—	—
	100,000	23845	19370	14715	13030	12335	10380	9860	9435	9190	—	—	—	—	—
4-15/16	10,000	30600	30600	30600	30130	28530	24005	22800	21820	—	—	—	—	—	—
	30,000	30600	30600	24475	21670	20520	17265	16400	15690	—	—	—	—	—	—
	50,000	30600	27640	20995	18590	17605	14810	14070	13460	—	—	—	—	—	—
	100,000	27640	22450	17055	15100	14300	12030	11425	10935	—	—	—	—	—	—
5-7/16	10,000	40800	40800	40800	40175	38040	32010	30400	—	—	—	—	—	—	—
	30,000	40800	40800	32635	28895	27360	23020	21865	—	—	—	—	—	—	—
	50,000	40800	36855	27995	24790	23470	19750	18755	—	—	—	—	—	—	—
	100,000	36855	29935	22740	20135	19065	16040	15235	—	—	—	—	—	—	—
5-15/16 6	10,000	46400	46400	46400	45690	43260	36400	34570	—	—	—	—	—	—	—
	30,000	46400	46400	37115	32860	31115	26180	24865	—	—	—	—	—	—	—
	50,000	46400	41915	31840	28195	26690	22460	21330	—	—	—	—	—	—	—
	100,000	41915	34045	25860	22900	21680	18245	17325	—	—	—	—	—	—	—

Unified SAF

USAF 500 series Split-Sphere

Selecting lubrication

Dodge Split-Sphere roller bearings are lubricated by the user at installation. Dodge Split-Sphere roller bearings can be run with either grease or oil lubrication.

Grease lubrication

In order to properly protect the bearing during installation, pack the bearing insert 100 percent full of grease immediately after properly mounting the bearing on the shaft. If the rpm of the application falls between 20 percent and 80 percent of maximum rpm (Table 11), pack the lower half of the housing one-third to one-half full. If the rpm of the application is less than 20 percent of maximum rpm, pack bearing housing cavity 100 percent full. If the rpm exceeds 80 percent of maximum rpm, do not add grease in the lower half of the housing nor in the cap.

At each re-greasing cycle, for applications up to 80 percent of maximum rpm, slowly add grease until fresh grease is seen purging at the seals. Re-greasing should be done while running. Remote re-greasing lines should be added to avoid endangering personnel. If the rpm is greater than 80 percent of maximum rpm, add 4 strokes of a handgun at each re-greasing cycle for bores up to 2". For bores greater than 2", up to 5", add 8" strokes of a handgun at each re-greasing cycle. For bores greater than 5", up to 6", add 16 strokes of a handgun at each re-greasing cycle. For units running above 80 percent of maximum rpm, running temperature should be monitored. If a drastic change in running temperature is noted, Dodge recommends removing the used grease completely and recharging with fresh grease per the above instructions.

Select a grease with a viscosity at an operating temperature which will provide full film lubrication (see Table 13). Use a 50 °F to 100 °F increase in bearing temperature above ambient, depending on rpm and load. Use Table 14 as a general guide for re-greasing the bearings. A small amount of grease at frequent intervals is preferable to a large amount of grease at infrequent intervals. For special applications involving high speeds, high loads, or very low speeds, consult Dodge Application Engineering at +1 864 284 5700.

Table 13: Viscosity of oil in grease

dN Δ	Viscosity for loads up to 18% of dynamic capacity ♦ (SUS @ operating temperature)	dN Δ	Viscosity for loads up to 18% of dynamic capacity ♦ (SUS. @ operating temperature)
100	3500	1400	625
200	3150	1600	525
300	2750	1800	450
400	2375	2000	400
500	2000	3000	300
600	1750	4000	200
700	1500	5000	150
800	1300	6000	130
900	1075	7000	110
1000	900	8000	100

Δ dN = Bore diameter (in) x rpm.

♦ For loads above 18% of dynamic capacity, an EP grease with the viscosity selected from above is recommended.

Table 14: Re-greasing intervals (months* – based on 12 hours per day, 150 °F Max.)

Shaft size (in)	Rpm							
	250	500	750	100	1250	1500	2000	2500
1-7/16—1-15/16	8	6	4	3	2	1	0.50	0.50
2-3/16	7	5	3	2	1	1	0.50	0.25
2-7/16—3	6	4	3	2	1	0.50	0.25	0.25
3-3/16—3-1/2	5	3	2	1	0.50	0.50	0.25	—
3-15/16—4-7/16	4	3	2	1	0.50	0.25	—	—
4-15/16—5-1/2	3	2	1	0.50	0.25	—	—	—
5-15/16—6	2	1	1	0.50	—	—	—	—

* For continuous operation, 24 hrs./day, reduce the re-greasing intervals by half.

Unified SAF

USAF 500 series Split-Sphere

Table 15: USAF 500 series Split-Sphere pillow block ratings

Shaft diameter S-1	Complete pillow block part number	Housing with stab ring part number	Bearing part number	Dynamic capacity (C) lbs	Max rpm (grease)	Split LER seal
2-3/16	P2B13-SS-203	H2S-513-USAF	BRG13SS203	32,500	2,600	14SS203
	043958	043998	043393			043501
	P4B13-SS-203	H4S-513-USAF	BRG13SS203	32,500	2,600	14SS203
	046110	039669	043393			043501
2-7/16	P2B15-SS-207	H2S-515-USAF	BRG15SS207	39,000	2,350	20SS207
	043959	044000	043400			043502
	P4B15-SS-207	H4S-515-USAF	BRG15SS207	39,000	2,350	20SS207
	043964	044003	043400			043502
2-11/16	P2B16-SS-211	H2S-516-USAF	BRG16SS211	40,500	2,300	24SS211
	043960	044198	043401			043504
	P4B16-SS-211	H4S-516-USAF	BRG16SS211	40,500	2,300	24SS211
	043965	044007	043401			043504
2-15/16	P2B17-SS-215	H2S-517-USAF	BRG17SS215	41,500	2,200	28SS215
	043961	044010	043402			043506
	P4B17-SS-215	H4S-517-USAF	BRG17SS215	41,500	2,200	28SS215
	043966	044013	043402			043506
3-3/16	P2B18-SS-303	H2S-518-USAF	BRG18SS303	47,500	2,000	34SS303
	043962	044199	043403			043508
	P4B18-SS-303	H4S-518-USAF	BRG18SS303	47,500	2,000	34SS303
	043967	044114	043403			043508
3-7/16	P2B20-SS-307	H2S-520-USAF	BRG20SS307	64,000	1,700	46SS307
	043963	044020	043404			043509
	P4B20-SS-307	H4S-520-USAF	BRG20SS307	64,000	1,700	46SS307
	043968	044023	043404			043509
3-15/16	P4B22-SS-315	H4S-522-USAF	BRG22SS315	80,000	1,450	50SS315
	043969	044025	043405			043511
4	P4B22-SS-400	H4S-522-USAF	BRG22SS400	80,000	1,450	50SS400
	043970	044025	043406			043512
4 3/16	P4B24-SS-403	H4S-524-USAF	BRG24SS403	102,000	1,300	52SS403
	043971	044202	043421			043513
4-7/16	P4B26-SS-407	H4S-526-USAF	BRG26SS407	120,000	1,200	54SS407
	043972	044031	043407			043514
4-15/16	P4B28-SS-415	H4S-528-USAF	BRG28SS415	143,000	1,100	56SS415
	043974	044034	043408			043516
5-7/16	P4B32-SS-507	H4S-532-USAF	BRG32SS507	190,000	950	60SS507
	043976	044040	043410			043519
5-15/16	P4B34-SS-515	H4S-534-USAF	BRG34SS515	216,000	900	64SS515
	043977	044043	043411			043520
6	P4B34-SS-600	H4S-534-USAF	BRG34SS600	216,000	900	64SS600
	043978	044043	043412			043521

Dimensions

USAF 500 series Split-Sphere pillow block – inch

2- and 4-bolt, adapter mount

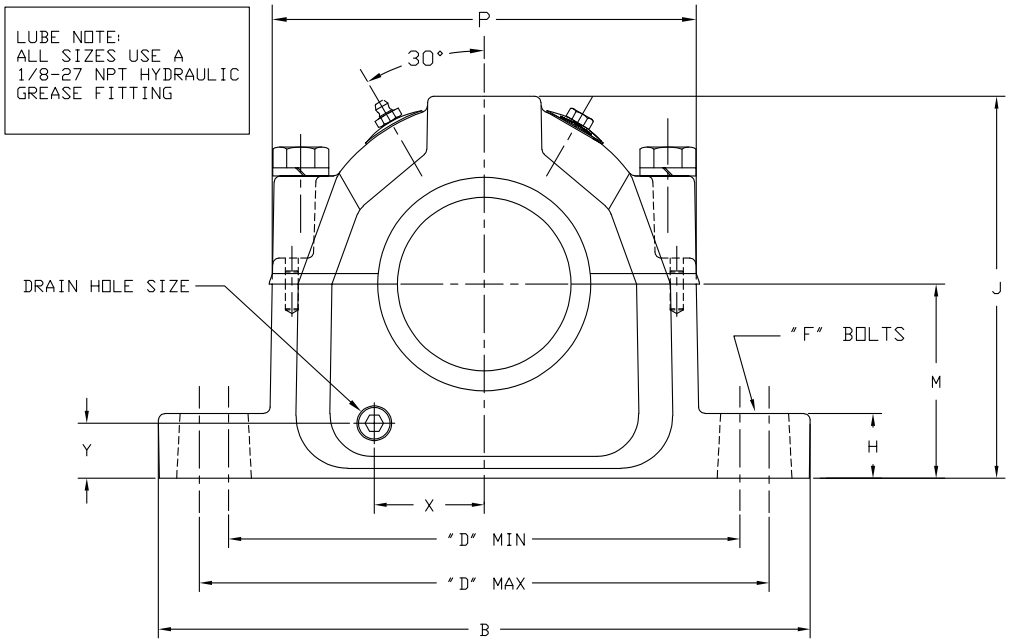

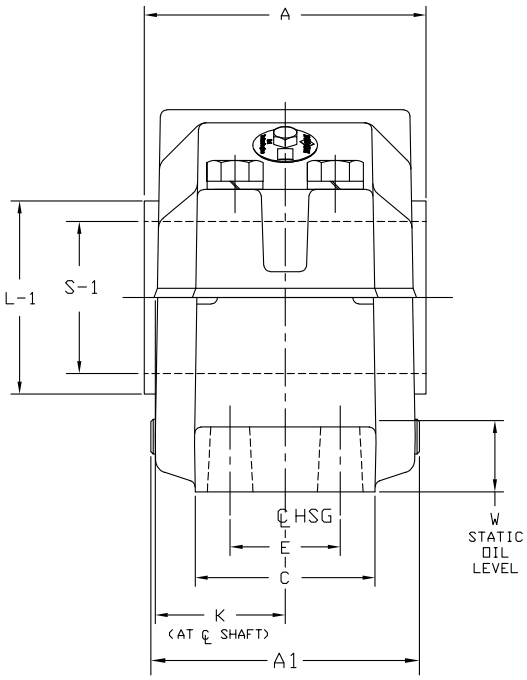

USAF 500 series Split-Sphere pillow block – inch

2- and 4-bolt, adapter mount

S-1 Shaft size	Housing	▲ A1	B	C	D				E
					2-bolt		4-bolt		
2-3/16	513	4.64	11.00	3.13	8.13	9.50	8.13	9.50	1.88
2-7/16	515	5.20	11.13	3.13	8.63	9.63	8.63	9.63	1.88
2-11/16	516	5.44	12.59	3.50	9.63	11.00	9.63	11.00	2.13
2-15/16	517	5.39	12.59	3.50	9.88	11.00	9.88	11.00	2.13
3-3/16	518	6.16	13.63	3.88	10.25	11.75	10.38	11.63	2.13
3-7/16	520	6.78	15.36	4.34	11.63	13.13	11.63	13.13	2.38
3-15/16 4	522	7.08	16.50	4.75	—	—	12.59	14.50	2.75
4-7/16	526	8.27	18.38	5.13	—	—	14.50	16.00	3.25
4-15/16	528	8.77	19.69	5.88	—	—	15.63	17.38	3.38
5-7/16	532	9.92	21.66	6.75	—	—	17.38	19.25	3.75
5-15/16 6	534	9.72	24.75	6.75	—	—	19.38	21.63	4.25

S-1 Shaft size	Housing	F		H	J	K	M	P
		2-bolt	4-bolt					
2-3/16	513	5/8	1/2	1.03	5.94	2.16	3.00	6.50
2-7/16	515	5/8	1/2	1.25	6.44	2.31	3.25	7.06
2-11/16	516	3/4	5/8	1.06	6.75	2.42	3.50	7.94
2-15/16	517	3/4	5/8	1.25	7.38	2.47	3.75	8.19
3-3/16	518	3/4	5/8	1.44	7.75	2.84	4.00	8.66
3-7/16	520	7/8	3/4	1.66	8.75	3.16	4.50	9.78
3-15/16 4	522	—	3/4	1.78	9.41	3.30	4.94	10.59
4-7/16	526	—	7/8	2.06	11.53	3.75	6.00	12.41
4-15/16	528	—	1	2.06	11.81	4.00	6.00	13.25
5-7/16	532	—	1	2.34	13.31	4.63	6.69	14.91
5-15/16 6	534	—	1	2.88	14.56	4.63	7.06	16.81

▲ Housing width with drain plugs.

USAF 500 series Split-Sphere pillow block – inch

Seals

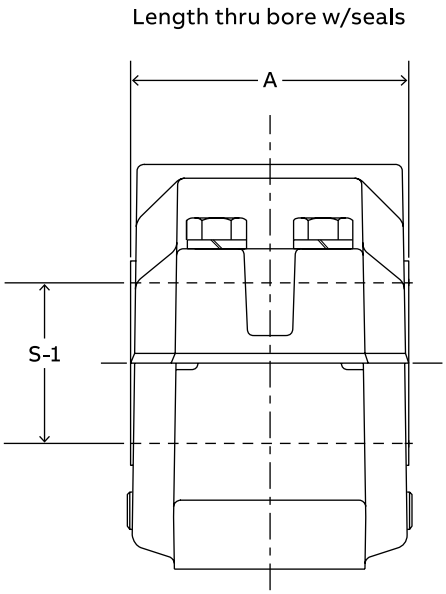

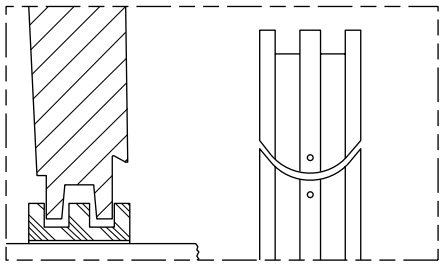

Split Seal
Permits easy installation in hard-to-reach applications without removing shaft. Non-metallic split LER.

S-1 Shaft size	Housing	Seal group	Seal part number	A
2-3/16	513	14	043501	4.72
2-7/16	515	20	043502	4.47
2-11/16	516	24	043504	4.72
2-15/16	517	28	043506	4.83
3-3/16	518	34	043508	5.70
3-7/16	520	46	043509	6.19
3-15/16	522	50	043511	6.59
4			043512	
4-3/16	524	52	043513	7.31
4-7/16	526	54	043514	7.50
4-15/16	528	56	043516	7.88
5-7/16	532	60	043519	9.20
5-15/16	534	64	043520	9.13
6			043521	
6-7/16	536	68	043522	9.69

USAF 500 series Split-Sphere pillow block – inch

22200 Split-Sphere roller bearings

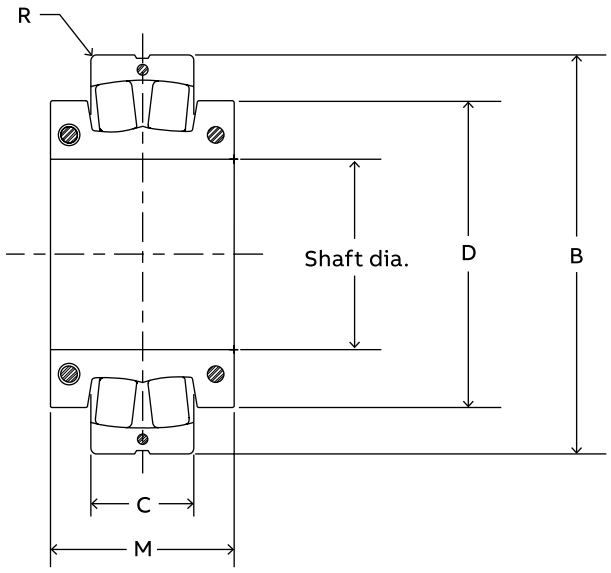

Shaft diameter (in)	Housing	Bearing descriptive number	Bearing part number	Approx. weight (lbs)	B in (mm)	C in (mm)	M in (mm)	D in	R in
2-3/16	513	22213SS203	043393	5.07	4.7244 (120)	1.2205 (31)	2.1654 (55)	3.3464	0.06
2-7/16	515	22215SS207	043400	5.73	5.1181 (130)	1.2205 (31)	2.3622 (60)	3.4646	0.06
2-11/16	516	22216SS211	043401	7.12	5.5118 (140)	1.2992 (33)	2.4409 (62)	3.701	0.08
2-15/16	517	22217SS215	043402	9.04	5.9055 (150)	1.4173 (36)	2.6772 (68)	4.0157	0.08
3-3/16	518	22218SS303	043403	10.1	6.2992 (160)	1.5748 (40)	2.7559 (70)	4.4094	0.08
3-7/16	520	22220SS307	043404	14.2	7.0866 (180)	1.811 (46)	2.9921 (76)	4.6457	0.08
3-15/16	522	22222SS315	043405	22.0	7.874 (200)	2.0866 (53)	3.622 (92)	5.4331	0.08
4		22222SS400	043406						
4-7/16	526	22226SS407	043407	32.2	9.0551 (230)	2.5197 (64)	4.0945 (104)	5.9842	0.12
4-15/16	528	22228SS415	043408	43.2	9.8425 (250)	2.6772 (68)	4.3307 (110)	6.6929	0.12
5-7/16	532	22232SS507	043410	69.4	11.4173 (290)	3.1496 (80)	4.8819 (124)	7.4016	0.12
5-15/16	534	22234SS515	043411	82.2	12.2047 (310)	3.3858 (86)	5.0394 (128)	7.9527	0.12
6		22234SS600	043412						

USAF 500 series pillow block - inch

2- and 4-bolt, adapter mount, open end

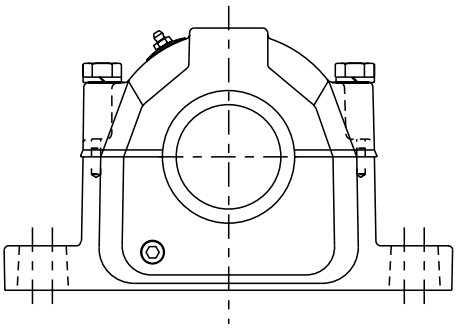

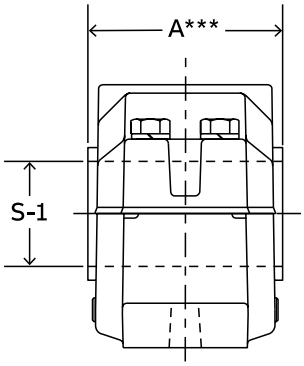

Shaft diameter S-1	Complete pillow block with TT seals part number	Complete pillow block with LER seals part number	Housing with stab ring part number	Bearing part number	Dynamic capacity (C) lbs	Max rpm (grease)
1-7/16	P2B509-USAF-107TT 043015	P2B509-USAF-107LER 043246	H2S-509-USAF 043995	BRG22209KC3 422134	24,500	5,600
1-11/16	P2B510-USAF-111TT 043048	P2B510-USAF-111LER 043247	H2S-510-USAF 043996	BRG22210KC3 422137	26,000	5,300
1-15/16	P2B511-USAF-115TT 043248	P2B511-USAF-115LER 040750	H2S-511-USAF 043997	BRG22211KC3 422123	31,500	4,500
2-3/16	P2B513-USAF-203TT 043249	P2B513-USAF-203LER 040751	H2S-513-USAF 043998	BRG22213KC3 422124	45,500	3,800
	P4B513-USAF-203TT 039579	—	H4S-513-USAF 039669	BRG22213KC3 422124		
2-7/16	P2B515-USAF-207TT 041860	P2B515-USAF-207LER 040752	H2S-515-USAF 044000	BRG22215KC3 422001	48,000	3,400
	P4B515-USAF-207TT 041861	P4B515-USAF-207LER 040772	H4S-515-USAF 044003	BRG22215KC3 422001		
2-1/2	P2B515-USAF-208TT 041862	P2B515-USAF-208LER 040753	H2S-515-USAF 044000	BRG22215KC3 422001	48,000	3,400
	P4B515-USAF-208TT 041863	P4B515-USAF-208LER 040773	H4S-515-USAF 044003	BRG22215KC3 422001		
2-11/16	P2B516-USAF-211TT 042406	P2B516-USAF-211LER 040754	H2S-516-USAF 044198	BRG22216KC3 422003	56,000	3,200
	P4B516-USAF-211TT 044015	P4B516-USAF-211LER 040774	H4S-516-USAF 044007	BRG22216KC3 422003		
2-3/4	P2B516-USAF-212TT 042409	P2B516-USAF-212LER 040755	H2S-516-USAF 044198	BRG22216KC3 422003	56,000	3,200
	P4B516-USAF-212TT 042423	P4B516-USAF-212LER 040775	H4S-516-USAF 044007	BRG22216KC3 422003		
2-15/16	P2B517-USAF-215TT 041864	P2B517-USAF-215LER 040756	H2S-517-USAF 044010	BRG22217KC3 422005	68,000	3,000
	P4B517-USAF-215TT 041865	P4B517-USAF-215LER 040776	H4S-517-USAF 044013	BRG22217KC3 422005		
3	P2B517-USAF-300TT 041866	P2B517-USAF-300LER 040757	H2S-517-USAF 044010	BRG22217KC3 422005	68,000	3,000
	P4B517-USAF-300TT 041867	P4B517-USAF-300LER 040777	H4S-517-USAF 044013	BRG22217KC3 422005		
3-3/16	P2B518-USAF-303TT 042422	P2B518-USAF-303LER 040827	H2S-518-USAF 044199	BRG22218KC3 422007	78,000	2,600
	P4B518-USAF-303TT 044115	P4B518-USAF-303LER 040778	H4S-518-USAF 044114	BRG22218KC3 422007		

USAF 500 series pillow block – inch

2- and 4-bolt, adapter mount, open end

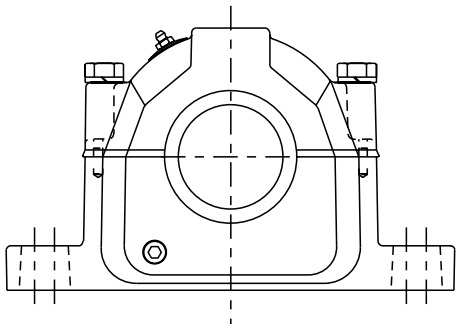

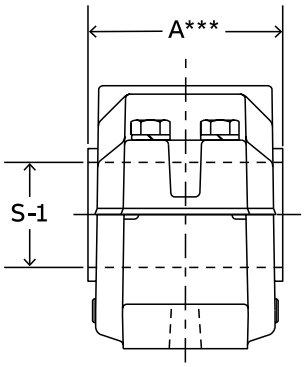

Shaft diameter S-1	SNW part number	Triple-Tect part number	TTDN part number	# LER part number	Aux part number	End cover part number
1-7/16	H309-SNW-107	08TT107	—	08LER107	—	EC08
	046350	043578		042193		040700
1-11/16	H310-SNW-111	10TT111	—	10LER111	—	EC10
	046351	043579		042199		040701
1-15/16	H311-SNW-115	12TT115	12TTDN115	12LER115	12AUX115	EC12
	046352	043540	039852	042512	041687	040702
2-3/16	H313-SNW-203	14TT203	14TTDN203	14LER203	14AUX203	EC14
	046353	043541	039853	042513	041688	040703
	H313-SNW-203	14TT203	14TTDN203	14LER203	14AUX203	EC14
	046353	043541	039853	042513	041688	040703
2-7/16	H315-SNW-207	20TT207	20TTDN207	20LER207	20AUX207	EC20
	046354	043542	039538	042514	042380	040704
	H315-SNW-207	20TT207	20TTDN207	20LER207	20AUX207	EC20
	046354	043542	039538	042514	042380	040704
2-1/2	H315-SNW-208	20TT208	20TTDN208	20LER208	20AUX208	EC20
	046355	043543	039854	042515	040890	040704
	H315-SNW-208	20TT208	20TTDN208	20LER208	20AUX208	EC20
	046355	043543	039854	042515	040890	040704
2-11/16	H316-SNW-211	24TT211	24TTDN211	24LER211	24AUX211	EC24
	046356	043544	039855	042516	042381	040705
	H316-SNW-211	24TT211	24TTDN211	24LER211	24AUX211	EC24
	046356	043544	039855	042516	042381	040705
2-3/4	H316-SNW-212	24TT212	24TTDN212	24LER212	24AUX212	EC24
	046357	043545	039856	042517	040891	040705
	H316-SNW-212	24TT212	24TTDN212	24LER212	24AUX212	EC24
	046357	043545	039856	042517	040891	040705
2-15/16	H317-SNW-215	28TT215	28TTDN215	28LER215	28AUX215	EC28
	046358	043546	039530	042518	042382	040706
	H317-SNW-215	28TT215	28TTDN215	28LER215	28AUX215	EC28
	046358	043546	039530	042518	042382	040706
3	H317-SNW-300	28TT300	28TTDN300	28LER300	28AUX300	EC28
	046359	043547	039857	042519	040918	040706
	H317-SNW-300	28TT300	28TTDN300	28LER300	28AUX300	EC28
	046359	043547	039857	042519	040918	040706
3-3/16	H318-SNW-303	34TT303	34TTDN303	34LER303	34AUX303	EC34
	046360	043548	039858	042520	040892	040707
	H318-SNW-303	34TT303	34TTDN303	34LER303	34AUX303	EC34
	046360	043548	039858	042520	040892	040707

Note: # LER seals are made from aluminum unless otherwise noted by the * symbol.

If an * appears by the part number, the LER seal is manufactured from steel.

USAF 500 series pillow block – inch

2- and 4-bolt, adapter mount, open end

Shaft diameter S-1	Complete pillow block with TT seals part number	Complete pillow block with LER seals part number	Housing with stab ring part number	Bearing part number	Dynamic capacity (C) lbs	Max rpm (grease)
3-7/16	P2B520-USAF-307TT 041868	P2B520-USAF-307LER 040758	H2S-520-USAF 044020	BRG22220KC3 422009	96,500	2,200
	P4B520-USAF-307TT 041869	P4B520-USAF-307LER 040989	H4S-520-USAF 044023	BRG22220KC3 422009		
3-1/2	P2B520-USAF-308TT 041870	P2B520-USAF-308LER 040759	H2S-520-USAF 044020	BRG22220KC3 422009	96,500	2,200
	P4B520-USAF-308TT 041871	P4B520-USAF-308LER 040779	H4S-520-USAF 044023	BRG22220KC3 422009		
3-15/16	P4B522-USAF-315TT 041872	P4B522-USAF-315LER 040990	H4S-522-USAF 044025	BRG22222KC3 422011	122,000	2,000
4	P4B522-USAF-400TT 041873	P4B522-USAF-400LER 040760	H4S-522-USAF 044025	BRG22222KC3 422011	122,000	2,000
4-3/16	P4B524-USAF-403TT 042431	P4B524-USAF-403LER 040761	H4S-524-USAF 044202	BRG22224KC3 422013	143,000	1,900
4-7/16	P4B526-USAF-407TT 041874	P4B526-USAF-407LER 040991	H4S-526-USAF 044031	BRG22226KC3 422015	170,000	1,800
4-1/2	P4B526-USAF-408TT 041875	P4B526-USAF-408LER 040762	H4S-526-USAF 044031	BRG22226KC3 422015	170,000	1,800
4-15/16	P4B528-USAF-415TT 041876	P4B528-USAF-415LER 040992	H4S-528-USAF 044034	BRG22228KC3 422017	196,000	1,700
5	P4B528-USAF-500TT 041877	P4B528-USAF-500LER 040763	H4S-528-USAF 044034	BRG22228KC3 422017	196,000	1,700
5-3/16	P4B530-USAF-503TT 042438	—	H4S-530-USAF 044203	BRG22230KC3 422019	228,000	1,600
5-7/16	P4B532-USAF-507TT 041878	P4B532-USAF-507LER 040993	H4S-532-USAF 044040	BRG22232KC3 422021	260,000	1,500
5-1/2	P4B532-USAF-508TT 041879	P4B532-USAF-508LER 040764	H4S-532-USAF 044040	BRG22232KC3 422021	260,000	1,500
5-15/16	P4B534-USAF-515TT 041880	P4B534-USAF-515LER 040994	H4S-534-USAF 044043	BRG22234KC3 422023	300,000	1,300
6	P4B534-USAF-600TT 041881	P4B534-USAF-600LER 040765	H4S-534-USAF 044043	BRG22234KC3 422023	300,000	1,300
6-7/16	P4B536-USAF-607TT 041882	P4B536-USAF-607LER 040766	H4S-536-USAF 044046	BRG22236KC3 422025	305,000	1,300
6-1/2	P4B536-USAF-608TT 041883	P4B536-USAF-608LER 040767	H4S-536-USAF 044046	BRG22236KC3 422025	305,000	1,300
6-15/16	P4B538-USAF-615TT 041884	P4B538-USAF-615LER 040768	H4S-538-USAF 044049	BRG22238KC3 422027	305,000	1,200
7	P4B538-USAF-700TT 041885	P4B538-USAF-700LER 040769	H4S-538-USAF 044049	BRG22238KC3 422027	305,000	1,200
7-3/16	P4B540-USAF-703TT 039606	—	H4S-540-USAF 039681	BRG22240KC3 422064	341,000	900
7-1/2	P4B544-USAF-708TT 042445	P4B544-USAF-708LER 040828	H4S-544S-USAF 044054	BRG22244KC3 422029	413,000	950
7-15/16	P4B544-USAF-715TT 041886	P4B544-USAF-715LER 040770	H4S-544-USAF 044055	BRG22244KC3 422029	413,000	950

USAF 500 series pillow block – inch

2- and 4-bolt, adapter mount, open end

Shaft diameter S-1	SNW part number	Triple-Tect part number	TTDN part number	# LER part number	Aux part number	End cover part number
3-7/16	H320-SNW-307	46TT307	46TTDN307	46LER307	46AUX307	EC46
	046361	043549	039859	042521	042383	040708
	H320-SNW-307	46TT307	46TTDN307	46LER307	46AUX307	EC46
	046361	043549	039859	042521	042383	040708
3-1/2	H320-SNW-308	46TT308	46TTDN308	46LER308	46AUX308	EC46
	046362	043550	039860	042522	040919	040708
	H320-SNW-308	46TT308	46TTDN308	46LER308	46AUX308	EC46
	046362	043550	039860	042522	040919	040708
3-15/16	H322-SNW-315	50TT315	50TTDN315	50LER315	50AUX315	EC50
	046363	043551	039861	042523	042384	040709
4	H322-SNW-400	50TT400	50TTDN400	50LER400	50AUX400	EC50
	046364	043552	039862	042524	040893	040709
4-3/16	H3124-SNW-403	52TT403	52TTDN403	52LER403	52AUX403	EC52
	046430	043553	039863	042525	044360	040710
4-7/16	H3126-SNW-407	54TT407	54TTDN407	54LER407	54AUX407	EC54
	046431	043554	039864	042526	042385	040711
4-1/2	H3126-SNW-408	54TT408	54TTDN408	54LER408	54AUX408	EC54
	046432	043555	039865	042527	042386	040711
4-15/16	H3128-SNW-415	56TT415	56TTDN415	56LER415	56AUX415	EC56
	046433	043556	039866	042528	042387	040712
5	H3128-SNW-500	56TT500	56TTDN500	56LER500	56AUX500	EC562
	046434	043557	039867	042529	040894	040712
5-3/16	SNW30X503	58TT503	—	58LER503	—	EC58
	043618	043558		042530		040713
5-7/16	SNW32X507	60TT507	—	60LER507	60AUX507	EC60
	043619	043559		042531	042388	040714
5-1/2	SNW32X508	60TT508	—	60LER508	60AUX508	EC60
	043634	043574		042532	040895	040714
5-15/16	SNW34X515	64TT515	—	64LER515	64AUX515	EC64
	043620	043560		042533	042389	040681
6	SNW34X600	64TT600	—	64LER600	64AUX600	EC64
	043621	043561		042534	041646	040681
6-7/16	SNW36X607	68TT607	—	68LER607	68AUX607	EC68
	043622	043562		042535	042390	040682
6-1/2	SNW36X608	68TT608	—	68LER608	68AUX608	EC68
	043623	043563		042536	042391	040682
6-15/16	SNW38X615	72TT615	—	72LER615	72AUX615	EC72
	043624	043564		042537	042392	040683
7	SNW38X700	72TT700	—	72LER700	72AUX700	EC72
	043625	043565		042538	043109	040683
7-3/16	SNW40X703	74TT703	—	74LER703	74AUX703	—
	046545	046421		043386	040690	
7-1/2	SNW44X708	76TT708	—	76LER708	76AUX708	EC76
	043627	043567		042539	040896	040684
7-15/16	SNW44X715	78TT715	—	78LER715	78AUX715	EC78
	043626	043566		042540	042393*	040685

Note: # LER seals are made from aluminum unless otherwise noted by the * symbol.

If an * appears by the part number, the LER seal is manufactured from steel.

USAF 500 series pillow block – inch

2- and 4-bolt, adapter mount, open end

Shaft diameter S-1	Complete pillow block part number	Housing with stab ring part number	Bearing part number	Dynamic capacity (C) lbs	Max rpm (grease)
8	P4B544-USAF-800TT 041887	H4S-544-USAF 044055	BRG22244KC3 422029	413,000	950
8-7/16	P4B048-USAF-807TT 042447	H4S-048-USAF 044200	BRG23048KC3 422031	303,000	950
8-1/2	P4B048-USAF-808TT 042448	H4S-048-USAF 044200	BRG23048KC3 422031	303,000	950
8-15/16	P4B048-USAF-815TT 042449	H4S-048-USAF 044200	BRG23048KC3 422031	303,000	950
9	P4B048-USAF-900TT 042453	H4S-048-USAF 044200	BRG23048KC3 422031	303,000	950
9-7/16	P4B052-USAF-907TT 042454	H4S-052-USAF 422542	BRG23052KC3 422543	375,000	900
9-1/2	P4B052-USAF-908TT 422544	H4S-052-USAF 422542	BRG23052KC3 422543	375,000	900
9-15/16	P4B056-USAF-915TT 042458	H4S-056-USAF 422560	BRG23056KC3 422030	400,000	850
10	P4B056-USAF-1000TT 041628	H4S-056-USAF 422560	BRG23056KC3 422030	400,000	850
10-7/16	P4B056-USAF-1007TT 042463	H4S-056L-USAF 044201	BRG23056KC3 422030	400,000	850
10-1/2	P4B056-USAF-1008TT 042464	H4S-056L-USAF 044201	BRG23056KC3 422030	400,000	850

USAF 500 series pillow block – inch

2- and 4-bolt, adapter mount, open end

Shaft diameter S-1	SNW part number	Triple-Tect part number	TTDN part number	# LER part number	Aux part number	End cover part number
8	SNW44X800 043628	78TT800 043568	—	78LER800 042541*	78AUX800 042394*	EC78 040685
8-7/16	SNP3048X807 043629	90TT807 043569	—	90LER807 042542*	90AUX807 040897*	EC90 042368
8-1/2	SNP3048X808 043630	90TT808 043570	—	90LER808 042543*	90AUX808 040898*	EC90 042368
8-15/16	SNP3048X815 043631	90TT815 043571	—	90LER815 042544*	—	EC90 042368
9	SNP3048X900 043632	90TT900 043572	—	90LER900 042545*	90AUX900 040995*	EC90 042368
9-7/16	SNP3052X907 043585	84TT907 043538	—	84LER907 042510*	84AUX907 040900*	EC84 422606
9-1/2	SNP3052X908 422538	84TT908 422545	—	84LER908 422594	84AUX908 040901*	EC84 422606
9-15/16	SNP3056X915 043586	92TT915 043575	—	92LER915 042511*	—	EC92 042369
10	SNP3056X1000 043633	92TT1000 043573	—	92LER1000 041082*	92AUX1000 042395*	EC92 042369
10-7/16	SNP3056X1007 043580	94TT1007 047940	—	94LER1007 042036*	—	EC94 040689
10-1/2	SNP3056X1008 422567	94TT1008 047941	—	94LER1008 422573*	94AUX1008 042396*	EC94 040689

Note: # LER seals are made from aluminum unless otherwise noted by the * symbol.

If an * appears by the part number, the LER seal is manufactured from steel.

USAF 500 series pillow block – inch

2- and 4-bolt, adapter mount, closed end

Shaft dia. S-1	Complete pillow block part number	Housing part number**	Bearing part number	Dynamic capacity (C) lbs	Max rpm (grease)	SNW part number	Triple-Tect part number	Drop-in Triple-Tect part number	# LER part number	Aux taconite part number
1-7/16	CP2B509-USAF-107TT	CH2S-509-USAF	BRG22209KC3	24,500	5,600	H309-SNW-107	08TT107	—	08LER107	—
	039575	039665	422134			046350	043578		042193	
1-11/16	CP2B510--USAF-111TT	CH2S-510-USAF	BRG22210KC3	26,000	5,300	H310-SNW-111	10TT111	—	10LER111	—
	039576	039666	422137			046351	043579		042199	
1-15/16	CP2B511-USAF-115TT	CH2S-511-USAF	BRG22211KC3	31,500	4,500	H311-SNW-115	12TT115	12TTDN115	12LER115	12AUX115
	039577	039667	422123			046352	043540	039852	042512	041687
2-3/16	CP2B513-USAF-203TT	CH2S-513-USAF	BRG22213KC3	45,500	3,800	H313-SNW-203	14TT203	14TTDN203	14LER203	14AUX203
	039578	039668	422124			046353	043541	039853	042513	041688
	CP4B513-USAF-203TT	CH4S-513-USAF	BRG22213KC3	45,500	3,800	H313-SNW-203	14TT203	14TTDN203	14LER203	14AUX203
	039580	039670	422124			046353	043541	039853	042513	041688
2-7/16	CP2B515-USAF-207TT	CH2S-515-USAF	BRG22215KC3	48,000	3,400	H315-SNW-207	20TT207	20TTDN207	20LER207	20AUX207
	039581	039544	422001			046354	043542	039538	042514	042380
	CP4B515-USAF-207TT	CH4S-515-USAF	BRG22215KC3	48,000	3,400	H315-SNW-207	20TT207	20TTDN207	20LER207	20AUX207
	039582	039545	422001			046354	043542	039538	042514	042380
2-1/2	CP2B515-USAF-208TT	CH2S-515-USAF	BRG22215KC3	48,000	3,400	H315-SNW-208	20TT208	20TTDN208	20LER208	20AUX208
	039583	039544	422001			046355	043543	039854	042515	040890
	CP4B515-USAF-208TT	CH4S-515-USAF	BRG22215KC3	48,000	3,400	H315-SNW-208	20TT208	20TTDN208	20LER208	20AUX208
	039584	039545	422001			046355	043543	039854	042515	040890
2-11/16	CP2B516-USAF-211TT	CH2S-516-USAF	BRG22216KC3	56,000	3,200	H316-SNW-211	24TT211	24TTDN211	24LER211	24AUX211
	039585	039671	422003			046356	043544	039855	042516	042381
	CP4B516-USAF-211TT	CH4S-516-USAF	BRG22216KC3	56,000	3,200	H316-SNW-211	24TT211	24TTDN211	24LER211	24AUX211
	039586	039672	422003			046356	043544	039855	042516	042381
2-3/4	CP2B516-USAF-212TT	CH2S-516-USAF	BRG22216KC3	56,000	3,200	H316-SNW-212	24TT212	24TTDN212	24LER212	24AUX212
	039587	039671	422003			046357	043545	039856	042517	040891
	CP4B516-USAF-212TT	CH4S-516-USAF	BRG22216KC3	56,000	3,200	H316-SNW-212	24TT212	24TTDN212	24LER212	24AUX212
	039588	039672	422003			046357	043545	039856	042517	040891
2-15/16	CP2B517-USAF-215TT	CH2S-517-USAF	BRG22217KC3	68,000	3,000	H317-SNW-215	28TT215	28TTDN215	28LER215	28AUX215
	039589	039508	422005			046358	043546	039530	042518	042382
	CP4B517-USAF-215TT	CH4S-517-USAF	BRG22217KC3	68,000	3,000	H317-SNW-215	28TT215	28TTDN215	28LER215	28AUX215
	039590	039509	422005			046358	043546	039530	042518	042382
3	CP2B517-USAF-300TT	CH2S-517-USAF	BRG22217KC3	68,000	3,000	H317-SNW-300	28TT300	28TTDN300	28LER300	28AUX300
	039591	039508	422005			046359	043547	039857	042519	040918
	CP4B517-USAF-300TT	CH4S-517-USAF	BRG22217KC3	68,000	3,000	H317-SNW-300	28TT300	28TTDN300	28LER300	28AUX300
	039592	039509	422005			046359	043547	039857	042519	040918
3-3/16	CP2B518-USAF-303TT	CH2S-518-USAF	BRG22218KC3	78,000	2,600	H318-SNW-303	34TT303	34TTDN303	34LER303	34AUX303
	039593	039673	422007			046360	043548	039858	042520	040892
	CP4B518-USAF-303TT	CH4S-518-USAF	BRG22218KC3	78,000	2,600	H318-SNW-303	34TT303	34TTDN303	34LER303	34AUX303
	039594	039674	422007			046360	043548	039858	042520	040892
3-7/16	CP2B520-USAF-307TT	CH2S-520-USAF	BRG22220KC3	96,500	2,200	H320-SNW-307	46TT307	46TTDN307	46LER307	46AUX307
	039595	039675	422009			046361	043549	039859	042521	042383
	CP4B520-USAF-307TT	CH4S-520-USAF	BRG22220KC3	96,500	2,200	H320-SNW-307	46TT307	46TTDN307	46LER307	46AUX307
	039596	039676	422009			046361	043549	039859	042521	042383

Note: # LER seals are made from aluminum unless otherwise noted by the * symbol.

If an * appears by the part number, the LER seal is manufactured from steel.

USAF 500 series pillow block – inch

2- and 4-bolt, adapter mount, closed end

Shaft dia. S-1	Complete pillow block part number	Housing part number**	Bearing part number	Dynamic capacity (C) lbs	Max rpm LER (grease)	SNW part number	Triple-Tect part number	Drop-in Triple-Tect part number	# LER part number	Aux taconite part number
3-1/2	CP2B520-USAF-308TT 039597	CH2S-520-USAF 039675	BRG22220KC3 422009	96,500	2,200	H320-SNW-308 046362	46TT308 043550	46TTDN308 039860	46LER308 042522	46AUX308 040919
	CP4B520-USAF-308TT 039598	CH4S-520-USAF 039676	BRG22220KC3 422009	96,500	2,200	H320-SNW-308 046362	46TT308 043550	46TTDN308 039860	46LER308 042522	46AUX308 040919
3-15/16	CP4B522-USAF-305TT 039599	CH4S-522-USAF 039677	BRG22222KC3 422011	122,000	2,000	H322-SNW-315 046363	50TT315 043551	50TTDN315 039861	50LER315 042523	50AUX315 042384
4	CP4B522-USAF-400TT 039600	CH4S-522-USAF 039677	BRG22222KC3 422011	122,000	2,000	H322-SNW-400 046364	50TT400 043552	50TTDN400 039862	50LER400 042524	50AUX400 040893
4-3-16	CP4B524-USAF-403TT 039601	CH4S-524-USAF 039678	BRG22224KC3 422013	143,000	1,900	H3124-SNW-403 046430	52TT403 043553	52TTDN403 039863	52LER403 042525	52AUX403 044360
4-7/16	CP4B526-USAF-407TT 039602	CH4S-526-USAF 039679	BRG22226KC3 422015	170,000	1,800	H3126-SNW-407 046431	54TT407 043554	54TTDN407 039864	54LER407 042526	54AUX407 042385
4-1/2	CP4B526-USAF-408TT 039603	CH4S-526-USAF 039679	BRG22226KC3 422015	170,000	1,800	H3126-SNW-408 046432	54TT408 043555	54TTDN408 039865	54LER408 042527	54AUX408 042386
4-15/16	CP4B528-USAF-415TT 039604	CH4S-528-USAF 039680	BRG22228KC3 422017	196,000	1,700	H3128-SNW-415 046433	56TT415 043556	56TTDN415 039866	56LER415 042528	56AUX415 042387
5	CP4B528-USAF-500TT 039605	CH4S-528-USAF 039680	BRG22228KC3 422017	196,000	1,700	H3128-SNW-500 046434	56TT500 043557	56TTDN500 039867	56LER500 042529	56AUX500 040894
5-3/16	CP4B530-USAF-503TT 039138	CH4S-530-USAF 039217	BRG2223KC3 422019	228,000	1,600	SNW30X503 043618	58TT503 043558	—	58LER503 042530	—
5-7/16	CP4B532-USAF-507TT 039141	CH4S-532-USAF 039218	BRG22232KC3 422021	260,000	1,500	SNW32X507 043619	60TT507 043559	—	60LER507 042531	60AUX507
5-1/2	CP4B532-USAF-508TT 039142	CH4S-532-USAF 039218	BRG22232KC3 422021	260,000	1,500	SNW32X508 043634	60TT508 043574	—	60LER508 042532	60AUX508 040895
5-15/16	CP4B534-USAF-515TT 039147	CH4S-534-USAF 039219	BRG22234KC3 422023	300,000	1,300	SNW34X515 043620	64TT515 043560	—	64LER515 042533	64AUX515 042389
6	CP4B534-USAF-600TT 039148	CH4S-534-USAF 039219	BRG22234KC3 422023	300,000	1,300	SNW34X600 043621	64TT600 043561	—	64LER600 042534	64AUX600 041646
6-7/16	CP4B536-USAF-607TT 039151	CH4S-536-USAF 039220	BRG22236KC3 422025	305,000	1,300	SNW36X607 043622	68TT607 042562	—	68LER607 042535	68AUX607 042390
6-1/2	CP4B536-USAF-608TT 039152	CH4S-536-USAF 039220	BRG22236KC3 422025	305,000	1,300	SNW36X608 043623	68TT608 043563	—	68LER608 042536	68AUX608 042391
6-15/16	CP4B538-USAF-615TT 039155	CH4S-538-USAF 039221	BRG22238KC3 422027	305,000	1,200	SNW38X615 043624	72TT615 043564	—	72LER615 042537	72AUX615 042392
7	CP4B538-USAF-700TT 039156	CH4S-538-USAF 039221	BRG22238KC3 422027	305,000	1,200	SNW38X700 043625	72TT700 043565	—	72LER700 042538	72AUX700 043109
7-3/16	CP4B540-USAF-703TT 039159	CH4S-540-USAF 039222	BRG22240KC3 422064	341,000	900	SNW40X703 046545	74TT703 046421	—	74LER703 043386	74AUX703 040690
7-1/2	CP4B544-USAF-708TT 039160	CH4S-544S-USAF 039223	BRG22244KC3 422029	413,000	950	SNW44X708 043627	76TT708 043567	—	76LER708 042539	76AUX708 040896
7-15/16	CP4B544-USAF-715TT 039163	CH4S-544-USAF 039224	BRG22244KC3 422029	413,000	950	SNW44X715 043626	78TT715 043566	—	78LER715 042540	78AUX715 042393*

Note: # LER seals are made from aluminum unless otherwise noted by the * symbol.

If an * appears by the part number, the LER seal is manufactured from steel.

USAF 500 series pillow block – inch

2- and 4-bolt, adapter mount, closed end

Shaft dia. S-1	Complete pillow block part number	Housing part number**	Bearing part number	Dynamic capacity (C) lbs	Max rpm LER (grease)	SNW part number	Triple-Tect part number	Drop In Triple-Tect part number	# LER part number	Aux taconite part number
8	CP4B544-USAF-800TT 039164	CH4S-544-USAF 039224	BRG22244KC3 422029	413,000	950	SNW44X800 043628	78TT800 043568	—	78LER800 042541*	78AUX800 042394*
8-7/16	CP4B048-USAF-807TT 039165	CH4S-048-USAF 039225	BRG23048KC3 422031	303,000	800	SNP3048X807 043629	90TT807 043569	—	90LER807 042542*	90AUX807 040897*
8-1/2	CP4B048-USAF-808TT 039166	CH4S-048-USAF 039225	BRG23048KC3 422031	303,000	800	SNP3048X808 043630	90TT808 043570	—	90LER808 042543*	90AUX808 040898*
8-15/16	CP4B048-USAF-815TT 039167	CH4S-048-USAF 039225	BRG23048KC3 422031	303,000	800	SNP3048X815 043631	90TT815 043571	—	90LER815 042544*	—
9	CP4B048-USAF-900TT 039168	CH4S-048-USAF 039225	BRG23048KC3 422031	303,000	800	SNP3048X900 043632	90TT900 043572	—	90LER900 042545*	90AUX900 040995*
9-7/16	CP4B052-USAF-907TT 039169	CH4S-052-USAF 039226	BRG23052KC3 422543	375,000	750	SNP3052X907 043585	84TT907 043538	—	84LER907 042510*	84AUX907 040900*
9-1/2	CP4B052-USAF-908TT 039170	CH4S-052-USAF 039226	BRG23052KC3 422543	375,000	750	SNP3052X908 422538	84TT908 422545	—	84LER908 042594*	84AUX908 040901*
9-15/16	CP4B056-USAF-915TT 039171	CH4S-056-USAF 039227	BRG23056KC3 422030	400,000	700	SNP3056X915 043586	92TT915 043575	—	92LER915 042511*	—
10	CP4B056-USAF-1000TT 039172	CH4S-056-USAF 039227	BRG23056KC3 422030	400,000	700	SNP3056X1000 043633	92TT1000 043573	—	92LER1000 041082*	92AUX1000 042395*
10-7/16	CP4B056-USAF-1007TT 039173	CH4S-056L-USAF 039228	BRG23056KC3 422030	400,000	700	SNP3056X1007 043580	94TT1007 047940	—	94LER1007 042036*	—
10-1/2	CP4B056-USAF-1008TT 039174	CH4S-056L-USAF 039228	BRG23056KC3 422030	400,000	700	SNP3056X1008 422567	94TT1008 047941	—	94LER1008 422573*	94AUX1008 042396*

Note: # LER seals are made from aluminum unless otherwise noted by the * symbol.

If an * appears by the part number, the LER seal is manufactured from steel.

USAF 500 series pillow block – inch

2- and 4-bolt, adapter mount

Shaft dia. S-1	Housing	500 Housing †							
		Through housing				Closed end housing			
		2-bolt		4-bolt		2-bolt		4-bolt	
		Part number	Appox. weight (lbs)	Part number	Approx. weight (lbs)	Part number	Appox. weight (lbs)	Part number	Appox. weight (lbs)
1-7/16	509	043995	9.5	—	—	039665	10.0	—	—
1-11/16	510	043996	11.3	—	—	039666	12.1	—	—
1-15/16	511	043997	15.6	039762	22.5	039667	16.5	—	23.5
2-3/16	513	043998	21.4	039669	22.5	039668	22.4	039670	23.5
2-7/16 2-1/2	515	044000	24.8	044003	26.4	039544	26.6	039545	27.9
2-11/16 2-3/4	516	044198	28.0	044007	28.0	039671	29.0	039672	29.0
2-15/16 3	517	044010	34.7	044013	38.3	039508	37.0	039509	40.6
3-3/16	518	044199	36.8	044114	37.2	039673	40.7	039674	41.2
3-7/16 3-1/2	520	044020	61.2	044023	61.8	039675	65.3	039676	65.9
3-15/16 4	522	—	—	044025	78.9	—	—	039677	84.0
4-3/16	524	—	—	044202	90.6	—	—	039678	96.1
4-7/16 4-1/2	526	—	—	044031	121.6	—	—	039679	128.2
4-15/16 5	528	—	—	044034	152.2	—	—	039680	162.2
5-3/16	530	—	—	044203	170.5	—	—	039217	182.3
5-7/16 5-1/2	532	—	—	044040	220.1	—	—	039218	235.2
5-15/16 6	534	—	—	044043	269.9	—	—	039219	282.8
6-7/16 6-1/2	536	—	—	044046	328.5	—	—	039220	349.7
6-15/16 7	538	—	—	044049	384.7	—	—	039221	409.4
7-3/16	540	—	—	039681	393.0	—	—	039222	403.0
7-1/2	544S	—	—	044054	624.0	—	—	039223	634.0
7-15/16 8	544	—	—	044055	621.0	—	—	039224	631.0
8-7/16 8-1/2 8-15/16 9	048	—	—	044200	386.0	—	—	039225	412.2
9-7/16 9-1/2	052	—	—	422542	575.0	—	—	039226	590.4
9-15/16 10	056	—	—	422560	692.0	—	—	039227	722.6
10-7/16 10-1/2	056L	—	—	044201	690.0	—	—	039228	720.0

† Includes stabilizing ring(s).

USAF 500 series pillow block – inch

2- and 4-bolt, adapter mount

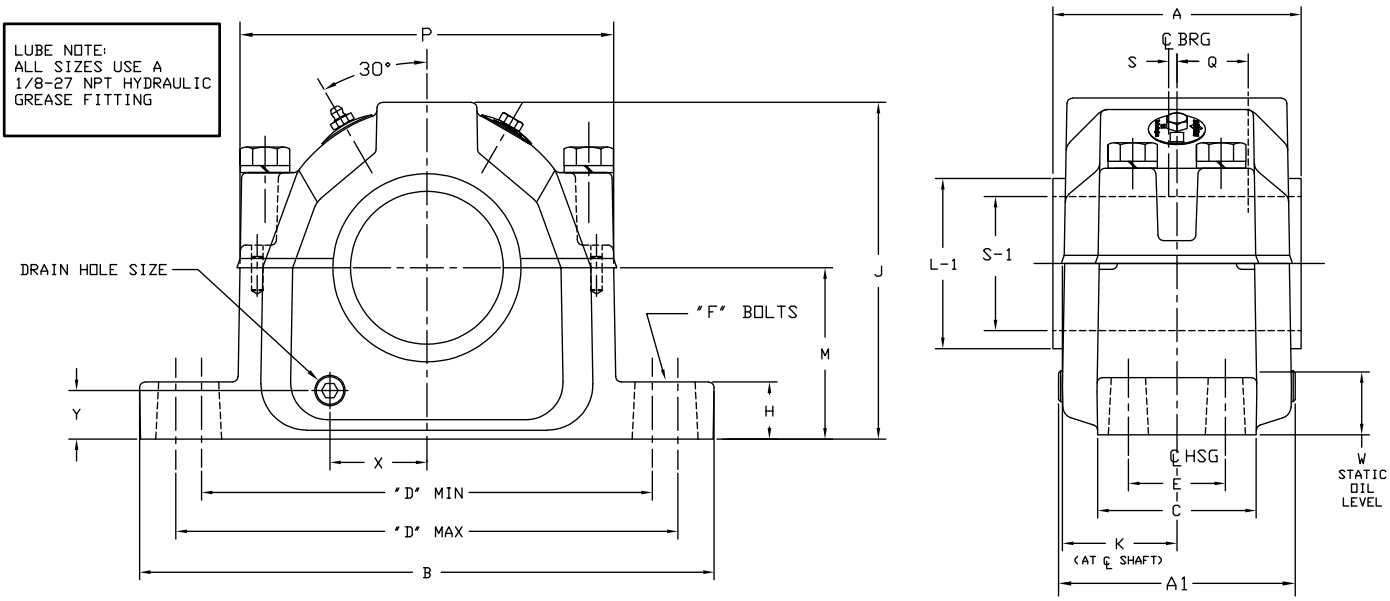

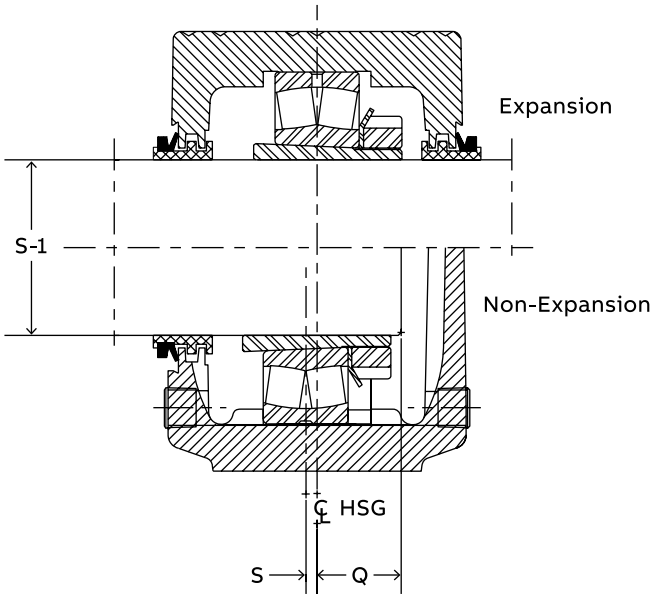

USAF 500 series pillow block – inch

2- and 4-bolt, adapter mount

S-1 Shaft size	Housing	A1▲	B	C	D				E	F bolt diameter	
					2-bolt		4-bolt				
					Min.	Max.	Min.	Max.		2-bolt	4-bolt
1-7/16	509	3.88	8.25	2.38	6.25	7.00	—	—	—	1/2	—
1-11/16	510	4.06	8.25	2.34	6.50	7.00	—	—	—	1/2	—
1-15/16	511	4.25	9.63	2.75	7.38	8.25	—	—	—	5/8	—
2-3/16	513	4.64	11.00	3.13	8.50	9.50	8.13	9.50	1.88	5/8	1/2
2-7/16 2-1/2	515	5.20	11.13	3.13	8.63	9.63	8.63	9.63	1.88	5/8	1/2
2-11/16 2-3/4	516	5.44	12.59	3.50	9.63	11.00	9.63	11.00	2.13	3/4	5/8
2-15/16 3	517	5.39	12.59	3.50	9.88	11.00	9.88	11.00	2.13	3/4	5/8
3-3/16	518	6.16	13.63	3.88	10.25	11.75	10.38	11.63	2.13	3/4	5/8
3-7/16 3-1/2	520	6.39	15.36	4.34	11.63	13.13	11.63	13.13	2.38	7/8	3/4
3-15/16 4	522	7.16	16.50	4.75	—	—	12.59	14.50	2.75	—	3/4
4-3/16	524	8.05	16.50	4.72	—	—	13.25	14.50	2.75	—	3/4
4-7/16 4-1/2	526	8.27	18.38	5.13	—	—	14.50	16.00	3.25	—	7/8
4-15/16 5	528	8.77	19.69	5.88	—	—	15.63	17.38	3.38	—	1

S-1 Shaft size	Housing	H	J	K	M	P	Q ★	S ●	W Static oil level	X	Y	Drain hole size
1-7/16	509	0.88	4.30	1.78	2.25	4.88	1.03	0.13	0.92	1.09	0.63	1/8-27 NPSI
1-11/16	510	1.03	4.59	1.88	2.50	5.13	1.11	0.13	1.08	1.25	0.81	1/8-27 NPSI
1-15/16	511	1.03	5.25	1.97	2.75	5.78	1.20	0.13	1.16	1.94	0.83	1/8-27 NPSI
2-3/16	513	1.03	5.94	2.16	3.00	6.50	1.38	0.16	1.11	1.66	0.78	1/8-27 NPSI
2-7/16 2-1/2	515	1.25	6.44	2.31	3.25	7.06	1.39	0.13	1.16	1.78	0.88	1/4-18 NPSF
2-11/16 2-3/4	516	1.06	6.75	2.42	3.50	7.94	1.44	0.18	1.25	1.97	0.95	1/4-18 NPSF
2-15/16 3	517	1.25	7.38	2.47	3.75	8.19	1.50	0.19	1.38	2.13	1.06	3/8-18 NPSF
3-3/16	518	1.44	7.75	2.84	4.00	8.66	1.72	0.19	1.47	2.50	1.13	3/8-18 NPSF
3-7/16 3-1/2	520	1.66	8.75	3.16	4.50	9.78	1.92	0.19	1.64	2.63	1.25	3/8-18 NPSF
3-15/16 4	522	1.78	9.41	3.30	4.94	10.59	2.09	0.19	1.80	2.88	1.34	3/8-18 NPSF
4-3/16	524	1.50	10.25	3.64	5.25	11.25	2.28	0.19	1.84	3.19	1.38	1/2-14 NPSF
4-7/16 4-1/2	526	2.06	11.53	3.75	6.00	12.41	2.47	0.19	2.34	3.31	1.63	1/2-14 NPSF
4-15/16 5	528	2.06	11.81	4.00	6.00	13.25	2.45	0.19	2.03	3.63	1.47	1/2-14 NPSF

▲ Housing width with drain plugs.

★ Distance shaft should extend beyond housing centerline if pillow block is closed end style.

● Non-expansion bearing offset from centerline. For expansion bearing S = 0.

USAF 500 series pillow block – inch

2- and 4-bolt, adapter mount

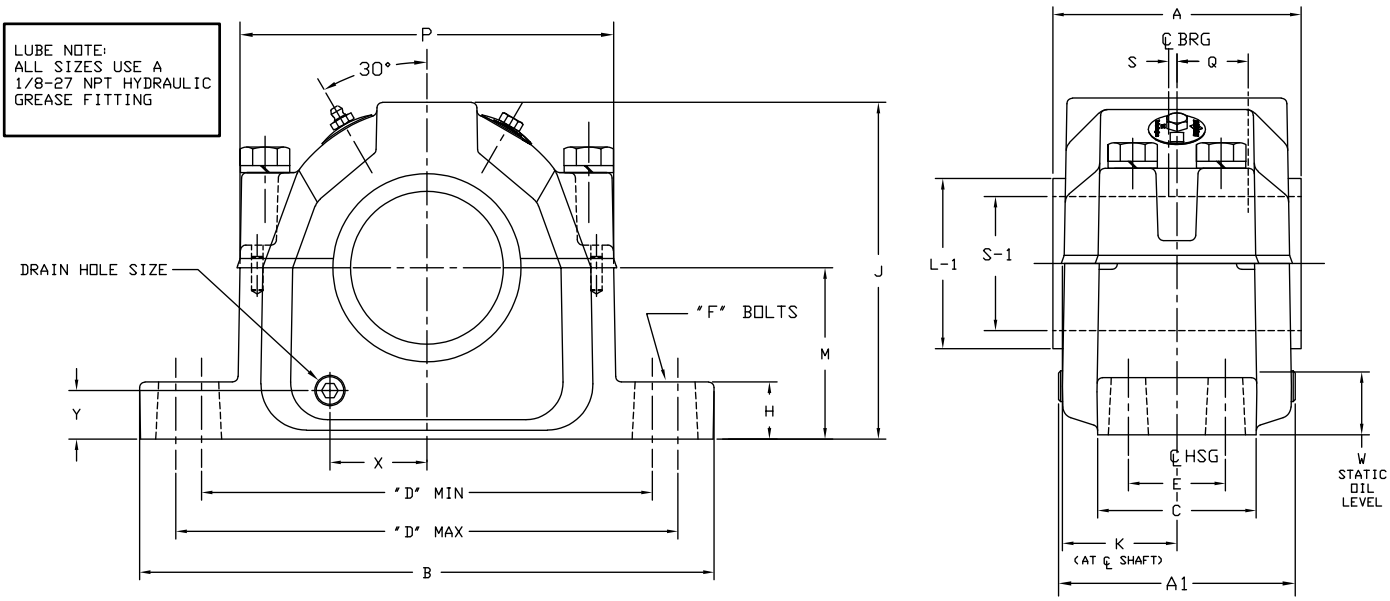

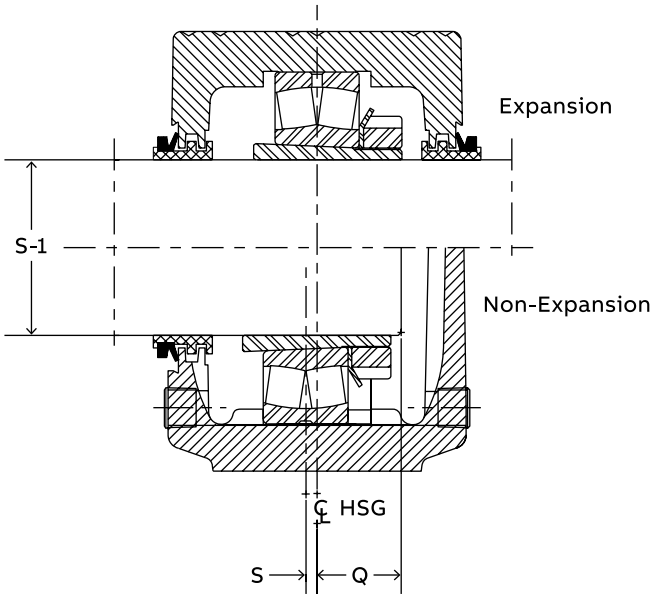

USAF 500 series pillow block – inch

2- and 4-bolt, adapter mount

S-1 Shaft size	Housing	A1▲	B	C	D				E	F bolt diameter	
					2-bolt		4-bolt				
					Min.	Max.	Min.	Max.		2-bolt	4-bolt
5-3/16	530	9.36	20.88	6.25	—	—	16.75	18.25	3.75	—	1
5-7/16 5-1/2	532	9.92	21.66	6.25	—	—	17.38	19.25	3.75	—	1
5-15/16 6	534	9.91	24.75	6.75	—	—	19.38	21.63	4.25	—	1
6-7/16 6-1/2	536	10.41	26.75	7.13	—	—	20.88	23.63	4.63	—	1
6-15/16 7	538	10.81	28.00	7.50	—	—	21.63	24.38	4.50	—	1-1/4
7-3/16	540	11.53	28.75	8.00	—	—	22.50	25.00	5.00	—	1-1/4
7-1/2	544S	12.30	32.75	8.80	—	—	24.75	27.88	5.25	—	1-1/2
7-15/16 8	544										
8-7/16 8-1/2 8-15/16 9	048	11.53	28.75	8.00	—	—	22.50	25.00	5.00	—	1-1/4
9-7/16 9-1/2	052	12.30	32.75	8.88	—	—	24.75	27.88	5.25	—	1-1/2
9-15/16 10	056	13.66	34.25	9.00	—	—	26.25	29.50	5.50	—	1-1/2
10-7/16 10-1/2	056L										

S-1 Shaft size	Housing	H	J	K	M	P	Q ★	S ●	W Static oil level	X	Y	Drain hole size
5-3/16	530	2.38	12.50	4.33	6.31	14.31	2.45	0.19	2.03	3.59	1.33	1/2-14NPSF
5-7/16 5-1/2	532	2.34	13.31	4.63	6.69	14.91	2.97	0.19	2.09	4.03	1.33	1/2-14NPSF
5-15/16 6	534	2.88	14.56	4.63	7.06	16.81	3.13	0.19	2.19	4.16	1.33	1/2-14NPSF
6-7/16 6-1/2	536	3.00	15.13	4.88	7.50	17.19	3.16	0.19	2.42	4.22	1.63	1/2-14NPSF
6-15/16 7	538	3.13	15.81	5.06	7.88	18.00	3.30	0.19	2.53	4.75	1.61	1/2-14NPSF
7-3/16	540	3.38	16.63	5.44	8.25	19.00	3.50	0.19	2.47	4.91	1.53	1/2-14NPSF
7-1/2	544S	3.75	18.88	5.81	9.50	21.25	3.73	0.19	3.25	5.44	2.03	1/2-14NPSF
7-15/16 8	544											
8-7/16 8-1/2 8-15/16 9	48	3.38	16.63	5.44	8.25	19.00	3.56	0.00	2.25	—	—	—
9-7/16 9-1/2	52	3.75	18.88	5.81	9.50	21.25	3.88	0.00	2.89	—	—	—
9-15/16 10	56	4.00	20.00	6.38	9.88	22.31	4.00	0.00	2.36	—	—	—
10-7/16 10-1/2	056L											

▲ Housing width with drain plugs.

★ Distance shaft should extend beyond housing centerline if pillow block is closed end style.

● Non-expansion bearing offset from centerline. For expansion bearing S = 0.

USAF 500 series pillow block – inch

Seals

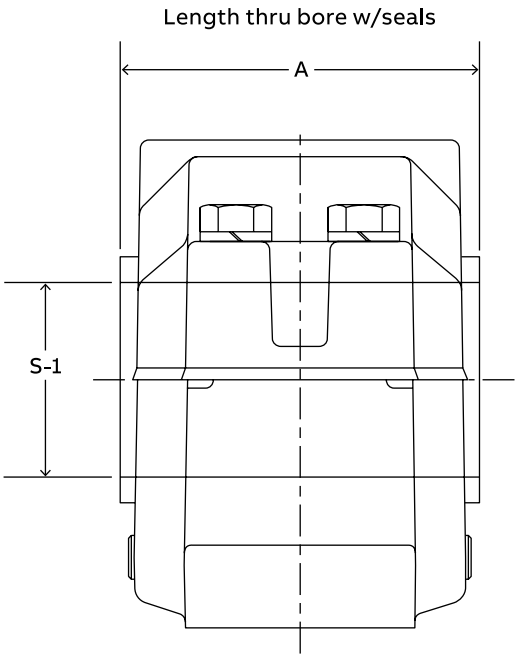

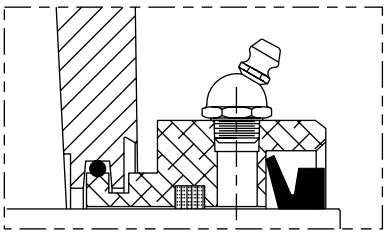

Auxiliary Taconite Seal
For dusty environments and low to moderate speeds

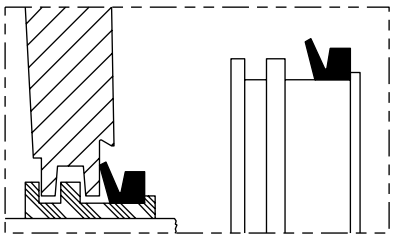

Triple-Tect Seal
General purpose seal for wet or dirty environments

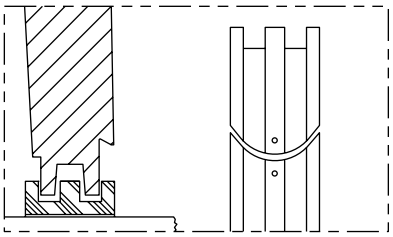

Split Seal
Permits easy installation in hard-to-reach applications without removing shaft. Non-metallic split LER

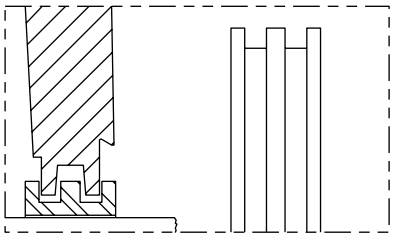

LER Seal
High speed seal for relatively clean environments

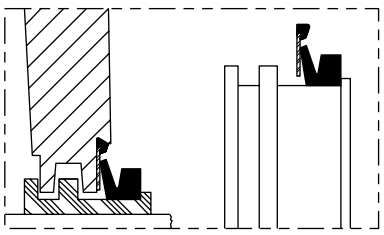

Drop-in Triple-Tect Seal
Dodge exclusive, popular Triple-Tect features with simplified installation.

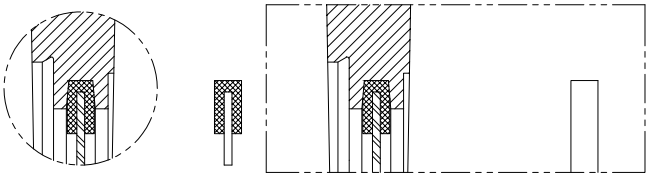

End Cover Seal
Allows use of open shaft housing as closed-end

USAF 500 series pillow block – inch

Seals

S-1 Shaft size	Housing	Seal group	Part numbers					A			
			Triple-Tect (TT)	Triple-Tect Drop-in (TTDN)	#Metal Labyrinth (LER)	Auxiliary Taconite (AUX)	End cover	TT	TTDN	LER	AUX
1-7/16	509	8	043578	—	042193	—	040700	3.97	3.97	3.42	6.56
1-11/16	510	10	043579	—	042199	—	040701	4.14	4.14	3.61	6.73
1-15/16	511	12	043540	039852	042512	041687	040702	4.34	4.34	3.83	6.69
2-3/16	513	14	043541	039853	042513	041688	040703	4.72	4.72	4.19	7.56
2-7/16	515	20	043542	039538	042514	042380	040704	4.94	4.94	4.47	7.47
2-1/2			043543	039854	042515	040890	040704				
2-11/16	516	24	043544	039855	042516	042381	040705	5.33	5.33	4.72	7.72
2-3/4			043545	039856	042517	040891	040705				
2-15/16	517	28	043546	039530	042518	042382	040706	5.44	5.44	4.83	7.95
3			043547	039857	042519	040918	040706				
3-3/16	518	34	043548	039858	042520	040892	040707	6.20	6.20	5.70	8.27
3-7/16	520	46	043549	039859	042521	042383	040708	6.78	6.78	6.19	9.06
3-1/2			043550	039860	042522	040919	040708				
3-15/16	522	50	043551	039861	042523	042384	040709	7.06	7.13	6.59	9.05
4			043552	039862	042524	040893	040709				
4-3/16	524	52	043553	039863	042525	044360	040710	7.91	7.59	7.31	—
4-7/16	526	54	043554	039864	042526	042385	040711	8.08	8.08	7.50	10.63
4-1/2			043555	039865	042527	042386	040711				
4-15/16	528	56	043556	039866	042528	042387	040712	8.47	8.47	7.88	11.13
5			043557	039867	042529	040894	040712				
5-3/16	530	58	043558	—	042530	—	040713	9.28	9.28	8.70	-
5-7/16	532	60	043559	—	042531	042388	040714	9.78	9.78	9.20	11.95
5-1/2			043574		042532	040895	040714				
5-15/16	534	64	043560	—	042533	042389	040681	9.83	9.83	9.13	11.88
6			043561		042534	041646	040681				
6-7/16	536	68	043562	—	042535	042390	040682	10.39	10.39	9.69	12.94
6-1/2			043563		042536	042391	040682				
6-15/16	538	72	043564	—	042537	042392	040683	10.69	10.69	9.98	13.23
7			043565		042538	043109	040683				
7-3/16	540	74	046421	—	043386	040690	040691	11.44	—	10.72	15.28
7-1/2	544S	76	043567	—	042539	040896	040684				—
7-15/16	544	78	043566	—	042540	042393	040685	12.13	12.13	11.34	15.97
8			043568		042541 *	042394	040685				
8-7/16	048	90	043569	—	042542 *	040897	042368	12.06	—	11.72	15.53
8-1/2			043570		042543 *	040898	042368				
8-15/16			043571		042544 *	040899	042368				
9			043572		042545 *	040995	042368				
9-7/16	052	84	043538	—	042510 *	040900	422606	12.77	—	11.41	16.22
9-1/2			422545		422594 *	040901	422606				
9-15/16	056	92	043575	—	042511 *	—	042369	13.92	—	12.66	17.13
10			043573		041082 *	042395	042369				
10-7/16	056L	94	047940	—	042036 *	—	042689	14.05	—	12.66	17.13
10-1/2			047941		422573 *	042396	042689				

Note: # LER seals are made from aluminum unless otherwise noted by the * symbol.

If an * appears by the part number, the LER seal is manufactured from steel.

USAF 500 series pillow block – inch

22200K and 23000K spherical roller bearings

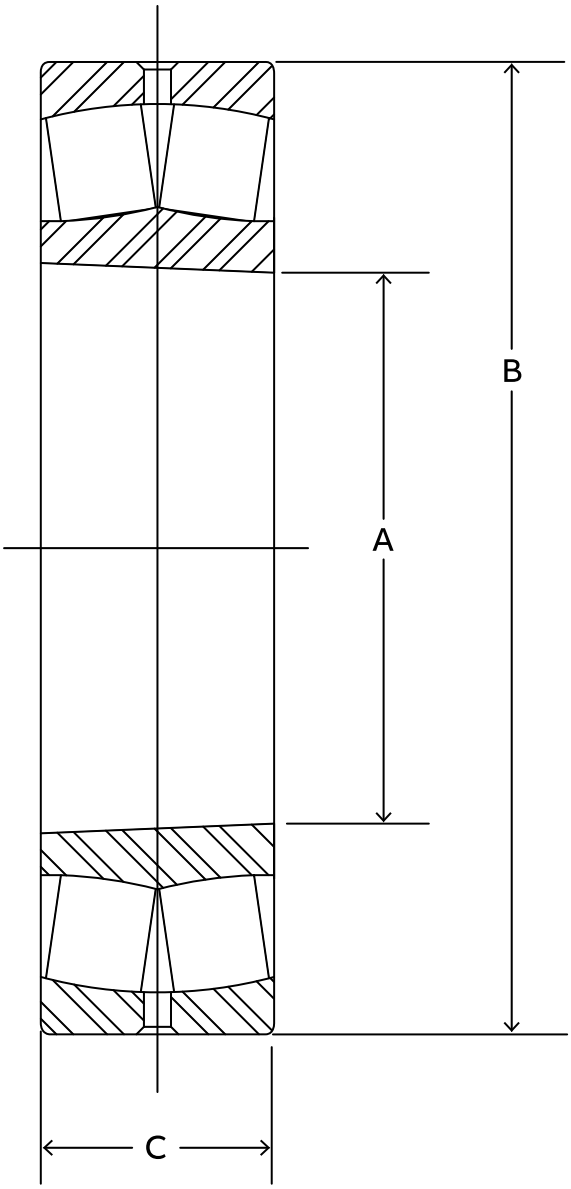

USAF 500 series pillow block – inch

22200K and 23000K spherical roller bearings

S-1 Shaft size (in)	Housing	Bearing number	Part number	Approx. weight (lbs)	A in (mm)	B in (mm)	C in (mm)
1-7/16	509	22209K	422134	1.2	1.7717 (45)	3.3465 (85)	.9055 (23)
1-11/16	510	22210K	422137	1.3	1.9685 (50)	3.5233 (90)	.9055 (23)
1-15/16	511	22211K	422123	1.8	2.1654 (55)	3.9370 (100)	.9843 (25)
2-3/16	513	22213K	422124	3.2	2.5591 (65)	4.7244 (120)	1.2205 (31)
2-7/16	515	22215K	422001	3.6	2.9528 (75)	5.1181 (130)	1.2205 (31)
2-1/2							
2-11/16	516	22216K	422003	4.4	3.1496 (80)	5.5188 (140)	1.2992 (33)
2-3/4							
2-15/16	517	22217K	422005	5.5	3.3465 (85)	5.9055 (150)	1.4173 (36)
3							
3-3/16	518	22218K	422007	7.0	3.5433 (90)	6.2992 (160)	1.5748 (40)
3-7/16	520	22220K	422009	10.4	3.9370 (100)	7.0866 (180)	1.8110 (46)
3-1/2							
3-15/16	522	22222K	422011	14.9	4.3307 (110)	7.8740 (200)	2.0866 (53)
4							
4-3/16	524	22224K	422013	18.7	4.7244 (120)	8.4646 (215)	2.2865 (58)
4-7/16	526	22226K	422015	23.4	5.1181 (130)	9.0551 (230)	2.5197 (64)
4-1/2							
4-15/16	528	22228K	422017	29.5	5.5118 (140)	9.8425 (250)	2.6772 (68)
5							
5-3/16	530	22230K	422019	37.5	5.9055 (150)	10.6299 (270)	2.8740 (73)
5-7/16	532	22232K	422021	48.1	6.2992 (160)	11.4173 (290)	3.1496 (80)
5-1/2							
5-15/16	534	22234K	422023	58.0	6.6929 (170)	12.2047 (310)	3.3858 (86)
6							
6-7/16	536	22236K	422025	60.8	7.0866 (180)	12.5984 (320)	3.3858 (86)
6-1/2							
6-15/16	538	22238K	422027	78.9	7.4803 (190)	13.3858 (340)	3.6220 (92)
7							
7-3/16	540	22240K	422064	94.1	7.8740 (200)	14.1732 (360)	3.8583 (98)
7-1/2	544S	22244K	422029	129.0	8.6614 (220)	15.7480 (400)	4.2520 (108)
7-15/16	544						
8							
8-7/16	048	23048K	422031	73.4	9.4488 (240)	14.1732 (360)	3.6220 (92)
8-1/2							
8-15/16							
9							
9-7/16	052	23052K	422543	106.0	10.2362 (260)	15.7480 (400)	4.0945 (104)
9-1/2							
9-15/16	056	23056K	422030	114.0	11.0236 (280)	16.5354 (420)	4.1732 (106)
10							
10-7/16	056L						
10-1/2							

USAF 500 series pillow block – inch

Adapter assembly

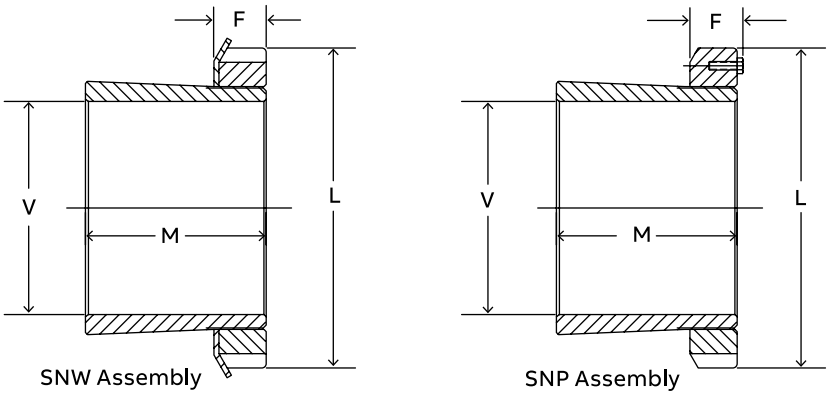

V Shaft diameter	Housing	SNW/SNP number	Part number	Approx. weight (lbs)	L	F Max	M
1-7/16	509	H309-SNW-107	046350	1.0	2.53	0.52	1.58
1-11/16	510	H310-SNW-111	046351	1.0	2.69	0.58	1.77
1-15/16	511	H311-SNW-115	046352	0.8	2.97	0.58	1.85
2-3/16	513	H313-SNW-203	046353	1.6	3.38	0.64	2.10
2-7/16	515	H315-SNW-207	046354	2.6	3.88	0.69	2.29
2-1/2		H315-SMW-208	046355	2.3			
2-11/16	516	H316-SNW-211	046356	2.6	4.16	0.69	2.37
2-3/4		H316-SNW-212	046357	2.6			
2-15/16	517	H317-SNW-215	046358	3.0	4.41	0.72	2.47
3		H317-SNW-300	046359	2.5			
3-3/16	518	H318-SNW-303	046360	3.1	4.66	0.80	2.63
3-7/16	520	H320-SNW-307	046361	4.6	5.19	0.83	2.87
3-1/2		H320-SNW-308	046362	4.4			
3-15/16	522	H322-SNW-315	046363	5.6	5.72	0.86	3.19
4		H322-SNW-400	046364	5.0			
4-3/16	524	H3124-SNW-403	046430	6.5	6.12	0.92	3.47
4-7/16	526	H3126-SNW-407	046431	9.2	6.75	0.95	3.76
4-1/2		H3126-SNW-408	046432	8.6			
4-15/16	528	H3128-SNW-415	046433	10.0	7.09	1.02	3.97
5		H3128-SNW-500	046434	9.0			
5-3/16	530	SNW30-503	043618	12.7	7.69	1.08	4.22
5-7/16	532	SNW32-507	043619	15.9	8.06	1.14	4.57
5-1/2		SNW32-508	043634	15.0			
5-15/16	534	SNW34-515	043620	17.6	8.66	1.23	4.83
6		SNW34-600	043621	17.0			
6-7/16	536	SNW36-607	043622	17.0	9.06	1.27	5.02
6-1/2		SNW36-608	043623	18.0			
6-15/16	538	SNW38-615	043624	18.0	9.47	1.30	5.26
7		SNW38-700	043625	17.0			
7-3/16	540	SNW40-703	046545	30.7	9.84	1.36	5.48
7-1/2	544S	SNW44-708	043627	30.2	11.00	1.42	5.90
7-15/16	544	SNW44-715	043626	36.0			
8		SNW44-800	043628	34.7			
8-7/16	048	SNP048-807	043629	38.0	11.44	1.73	5.44
8-1/2		SNP048-808	043630	30.0			
8-15/16		SNP048-815	043631	28.0			
9		SNP048-900	043632	22.0			
9-7/16	052	SNP052-907	043585	41.1	12.19	1.80	6.02
9-1/2		SNP052-908	422538	40.0			
9-15/16	056	SNP056-915	043586	43.7	13.00	1.89	6.19
10		SNP056-1000	043633	42.0			
10-7/16	056L	SNP056-1007	043580	30.0			
10-1/2		SNP056-1008	422567	28.0			

USAF 500 series pillow block – inch

Stabilization rings

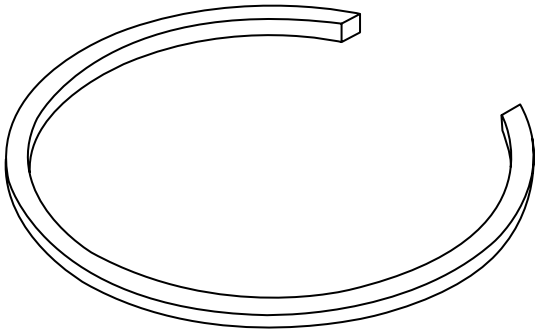

Housing	Stabilizing ring number	Stabilizing ring part number ▲
509	9-9	041987
510	10-8	042335
511	11-9	042315
513	13-0	042316
515/215	15-0	041174
516/216	16-13	041172
517/217	17-14	041175
518/218	18-15	041173
520/220	20-17	041176
522/222	22-19	041177
524/224	24-20	041185
526/226	26-0	041178
528/228	28-0	041179
530/230	30-0	041186
532/232	32-0	041180
534/234	34-0	041181
536/236	36-30	041184
538/238	38-32	041182
540/240	40-34	046639
544S/544/244	44-38	041183
* 048	A8897	041161
* 052	A8898	422554
* 056/056L	A8819	041213

Housing	Stabilizing ring number	Stabilizing ring part number ▲
308	10-8	042335
609/309	11-9	042315
610/310	0-10	046642
611/311	6-11	046632
312	15-0	041174
613/313	16-13	041172
314	17-14	041175
615/315	18-15	041173
616/316	19-16	046643
617/317	20-17	041176
620/320	24-20	041185
622/322	0-22	046635
624/324	0-24	046634
626/326	0-26	046637
628/328	0-28	046638
630/330	36-30	041184
632/332	38-32	041182
634/334	40-34	046639
638/338	44-38	041183

* Two stabilizing rings required per housing.

▲ Part numbers for reference only.
Housings come equipped with stabilizing rings enclosed.

USAF

D-Mount adapter system

- Saves time removing bearing from shaft
- Reduces the use of blue flame torches
- Increases uptime
- Lowers maintenance costs

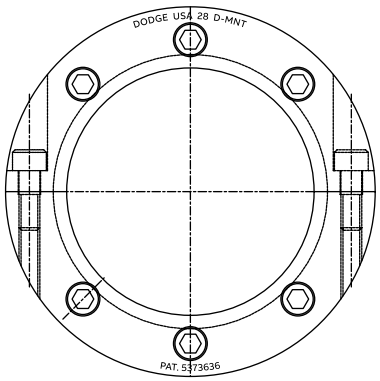

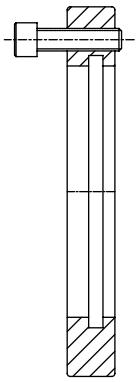

D-Mount tool

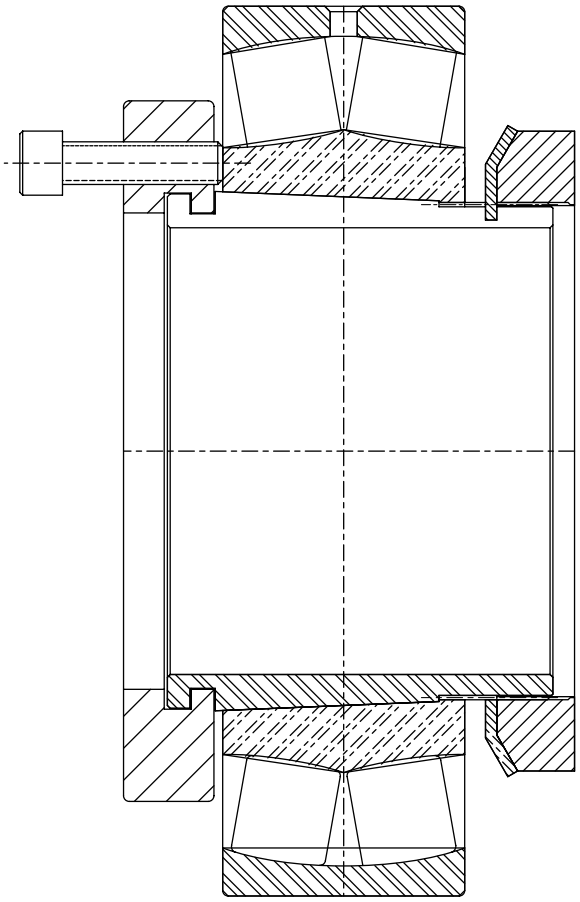

D-Mount tool - SNW - Bearing with tool assembled ready to remove bearing

For use on 22209K through 22244K size bearings

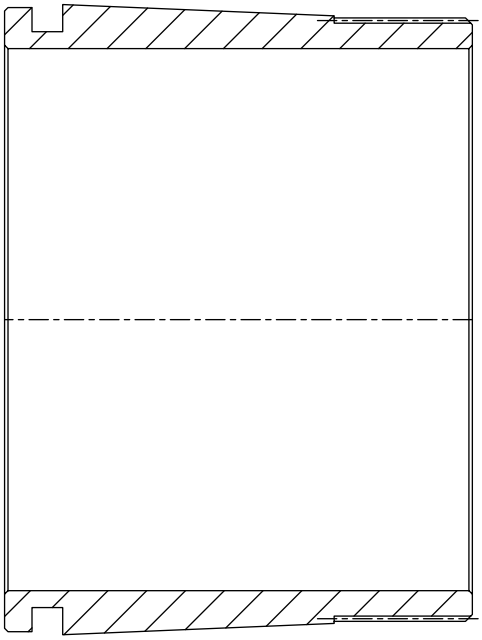

D-Mount adapter sleeve

How it works

Split D-Mount tool is mounted on D-Mount adapter and uses socket head cap screws to force the inner ring off the taper to unlock the bearing from the adapter sleeve. No additional space allowance is required.

This adapter sleeve is used in place of the standard adapter sleeve.

USAF

D-Mount adapter system

D-Mount adapter with removal feature – inch

Part number	Description
046960	DH09-SNW-107
046961	DH10-SNW-111
046962	DH11-SNW-115
046963	DH13-SNW-203
046964	DH15-SNW-207
046965	DH15-SNW-208
046966	DH16-SNW-211
046967	DH16-SNW-212
046968	DH17-SNW-215
046969	DH17-SNW-300
046970	DH18-SNW-303
046971	DH20-SNW-307
046972	DH20-SNW-308
046973	DH22-SNW-315
046974	DH22-SNW-400
046975	DH24-SNW-403
046976	DH26-SNW-407
046977	DH26-SNW-408
046978	DH28-SNW-415
046979	DH28-SNW-500
046980	DH30-SNW-503
046981	DH32-SNW-507
046982	DH32-SNW-508
046983	DH34-SNW-515
046984	DH34-SNW-600
046985	DH36-SNW-607
046986	DH36-SNW-608
046987	DH38-SNW-615
046988	DH38-SNW-700
046989	DH40-SNW-703
046991	DH44-SNW-708
046992	DH44-SNW-715
046993	DH44-SNW-800

D-Mount adapter with removal feature – metric

Part number	Description
047815 *	DH09-SNW-40M
047816 *	DH10-SNW-45M
047817 *	DH11-SNW-50M
047818 *	DH12-SNW-55M
047819 *	DH13-SNW-60M
047820 *	DH15-SNW-65M
047821 *	DH16-SNW-70M
047822 *	DH17-SNW-75M
047823 *	DH18-SNW-80M
047824 *	DH19-SNW-85M
047825 *	DH20-SNW-90M
047826 *	DH22-SNW-100M
047827 *	DH24-SNW-110M
047828 *	DH26-SNW-115M
047829 *	DH28-SNW-125M
047830 *	DH30-SNW-135M
047831 *	DH32-SNW-140M

* Made to order.

D-Mount adapter removal tools

Part number	Description
046872	D-Mount Tool 09
046873	D-Mount Tool 10
046874	D-Mount Tool 11
046850	D-Mount Tool 12
046875	D-Mount Tool 13
046876	D-Mount Tool 15
046877	D-Mount Tool 16
046878	D-Mount Tool 17
046879	D-Mount Tool 18
046851	D-Mount Tool 19
046880	D-Mount Tool 20
046881	D-Mount Tool 22
046882	D-Mount Tool 24
046883	D-Mount Tool 26
046884	D-Mount Tool 28
046885	D-Mount Tool 30
046886	D-Mount Tool 32
046887	D-Mount Tool 34
046891	D-Mount Tool 36
046892	D-Mount Tool 38
046893	D-Mount Tool 40
046894	D-Mount Tool 44

USAF 500 series air handling pillow block – inch

1200 series self-aligning double-row ball bearings

Shaft size	Housing series	Housing part number		Bearing		SNW part number	Seal part number # LER (2-Req)	Stab ring for fixed units		
		2-bolt	4-bolt	part number	Description			Description	Qty req.	Part number
1-7/16	509	043995	—	052637	1209K.C3	046350	042193	SR-9-0	1	058902
1-11/16	510	043996	—	052638	1210K.C3	046351	042199 *	SR-10-8	1	058903
1-15/16	511	043997	—	052639	1211K.C3	046352	042512	SR-11-9	1	058699
2-3/16	513	043998	039669	052640	1213K.C3	046353	042513	SR-13	2	042316
2-7/16	515	044000	044003	052641	1215K.C3	046354	042514	SR-15-0	2	058904
2-11/16	516	044198	044007	052642	1216K.C3	046356	042516	SR-1516	2	058905
2-15/16	517	044010	044013	052643	1217K.C3	046358	042518	SR-1517	2	058906
3-3/16	518	044199	044114	052570	1218K.C3	046360	042520	SR-1518	2	058907
3-7/16	520	044020	044023	052644	1220K.C3	046361	042521	SR-1520	2	058908
3-15/16	522	—	044025	051841	1222K.C3	046363	042523	SR-1522	2	058909

Standard housings come with stabilizing ring for fixing spherical roller bearings.

With the use of the 12xx series ball bearings, if a fixed bearing is required, special stabilizing rings are needed.

Remove standard stab ring, which comes with housing, and replace with the above ball bearing stab rings.

The 4-3/16" unit is not available as fixed unit due to non-standard stab ring width. (2) special width .503-.057" would be needed.

In cases where two stab rings are needed, one should be placed on each side of the bearing.

Note: LER seals are made from aluminum unless otherwise noted by the * symbol.

If an * appears by the part number, the LER seal is manufactured from steel.

Stabilizing ring dimensions

Stab ring	
OD	Width
3.31	0.382—0.386
3.51	0.382—0.386
3.9	0.382—0.386
4.68	0.311—0.315
5.08	0.236—0.232
5.47	0.326—0.330
5.87	0.346—0.350
6.26	0.386—0.390
7.04	0.425—0.429
7.83	0.484—0.488

USAF 500 series air handling pillow block – inch

1200 series self-aligning double-row ball bearings

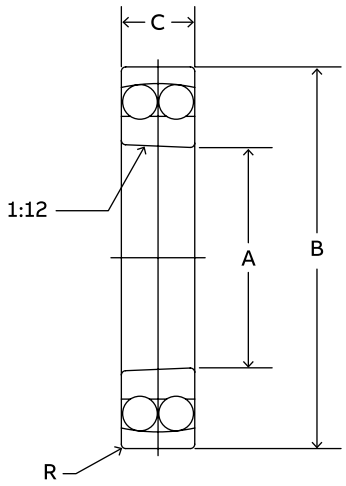

Shaft size	Bearing series	e	$F_A/F_R \le e$	$F_A/F_R > e$	Dynamic capacity (C)	Static capacity (C_0)	Maximum rpm	
			Y	Y			Grease	Oil
107	1209	0.21	3.0	4.7	4900	1660	7500	9000
111	1210	0.20	3.2	4.9	5100	1830	7000	8500
115	1211	0.19	3.3	5.1	6000	2240	6300	7500
203	1213	0.18	3.6	5.5	6950	2800	5300	6300
207	1215	0.17	3.6	5.6	8800	3450	4800	5600
211	1216	0.16	3.9	6.0	9000	3800	4300	5000
215	1217	0.17	3.7	5.8	11000	4550	4000	4800
303	1218	0.17	3.7	5.8	12900	5300	3800	4500
307	1220	0.18	3.6	5.5	15600	6700	3200	3800
315	1222	0.17	3.6	5.6	19600	8650	2800	3400
403	1224	0.20	3.11	4.81	27000	11800	2800	3400

Note: Peq = F_R + YFA when $F_A / F_R \le e$

Peq = 0.65 F_R + YFA when $F_A / F_R > e$

$$L_{10} = \left(\frac{C}{P}\right)^3 \times \left(\frac{16667}{rpm}\right)$$

Shaft	Housing	Bearing number	A	B	C	R
			in (mm)	in (mm)	in (mm)	in (mm)
107	509	1209K.C3	1.7717 (45)	3.3465 (85)	0.7480 (19)	0.043 (1.1)
111	510	1210K.C3	1.9685 (50)	3.5433 (90)	0.7874 (20)	0.043 (1.1)
115	511	1211K.C3	2.1654 (55)	3.9370 (100)	0.8268 (21)	0.059 (1.5)
203	513	1213K.C3	2.5591 (65)	4.7244 (120)	0.9055 (23)	0.059 (1.5)
207	515	1215K.C3	2.9528 (75)	5.1181 (130)	0.9843 (25)	0.059 (1.5)
211	516	1216K.C3	3.1496 (80)	5.5118 (140)	1.0236 (26)	0.079 (2.0)
215	517	1217K.C3	3.3465 (85)	5.9055 (150)	1.1024 (28)	0.079 (2.0)
303	518	1218K.C3	3.5433 (90)	6.2992 (160)	1.1811 (30)	0.079 (2.0)
307	520	1220K.C3	3.9370 (100)	7.0866 (180)	11.3386 (34)	0.083 (2.1)
315	522	1222K.C3	4.3307 (110)	7.8740 (200)	1.4960 (38)	0.083 (2.1)
403	524	1224K.C3	4.7244 (120)	8.4646 (215)	1.6535 (42)	0.083 (2.1)

SAF-XT 500 series pillow block – inch

2-bolt, adapter mount

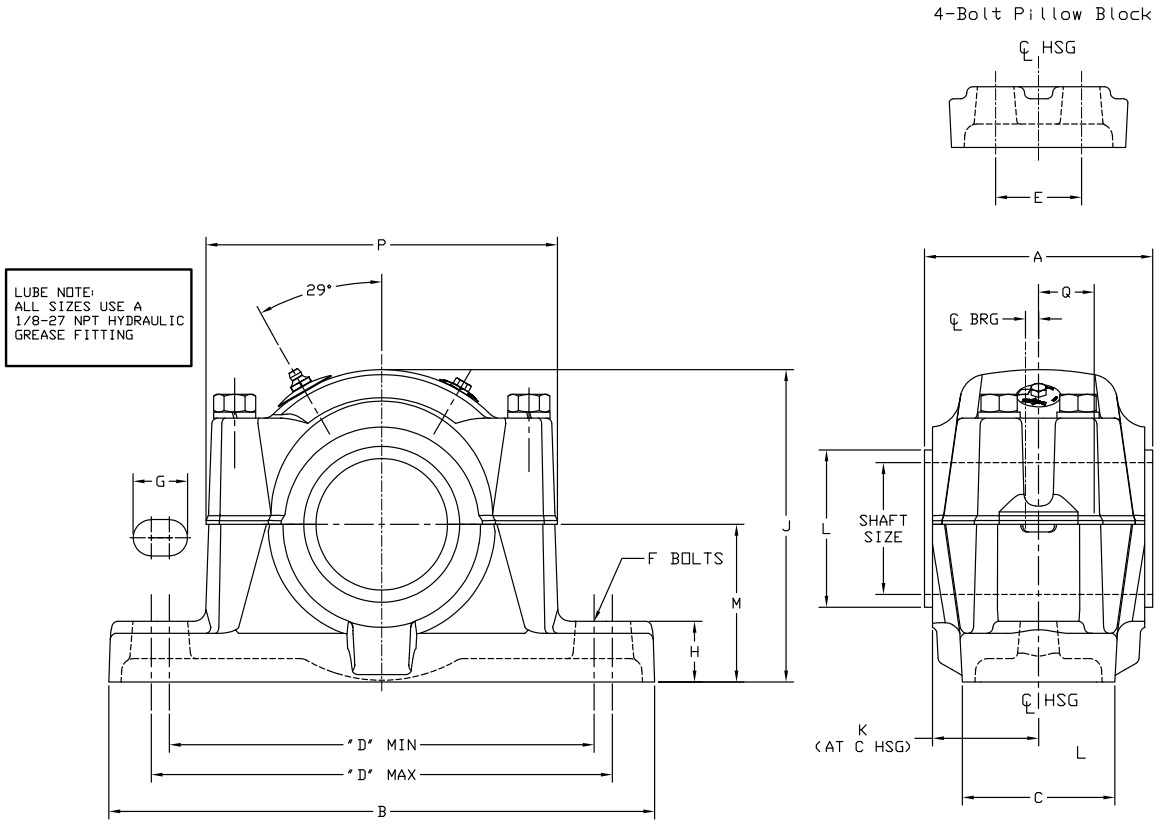

22200K Adapter mount bearing

Shaft size (in) ▲	Complete pillow block desig SAF-XT	Part number ★	Weight	A			B	C	D		F bolt dia.	G	H	J	K	L ♥	M	P	Q ♦	S C_L of housing to C_L of bearing	
				Std. Triple-Tect	Optional LER	Optional AUX.			Min.	Max.										Exp. block	Non-Exp. block
1-15/16	22511	042001	17.3	4.14	3.6.3	5.55	9.63	2.75	7.50	7.75	5/8	0.88	0.94	5.25	1.84	2.30	2.75	5.63	0.97	0.19	0.30
2-3/16	22513	042002	23.8	4.53	4.00	5.81	11.00	3.13	8.25	9.38	5/8	1.31	1.00	5.94	2.03	2.55	3.00	6.41	1.13	0.25	0.39
2-7/16	22515	042003	29.7	4.91	4.42	7.44	11.25	3.13	8.75	9.50	5/8	1.12	1.25	6.44	2.19	2.80	3.25	7.00	1.20	0.16	0.27
2-1/2		042004	29.6																		
2-11/16	22516	042005	36.3	5.23	4.61	7.63	13.00	3.50	10.13	10.63	3/4	1.12	1.50	6.88	2.28	3.69	3.50	7.94	1.28	0.19	0.38
2-3/4		042006	36.1																		
2-15/16	22517	042007	42.3	5.48	4.86	7.88	13.00	3.50	10.25	10.75	3/4	1.12	1.50	7.38	2.41	3.42	3.75	7.94	1.38	0.19	0.38
3		042008	42.1																		
3-3/16	22518	042009	52.5	5.95	5.44	8.00	13.75	3.88	10.75	11.25	3/4	1.12	1.63	7.75	2.66	3.69	4.00	8.44	1.41	0.30	0.48
3-7/16	22520	042010	69.5	6.22	5.63	8.50	15.25	4.38	11.88	12.63	7/8	1.38	1.75	8.75	2.75	3.83	4.50	9.44	1.53	0.38	0.56
3-1/2		042011	69.2																		

▲ Sizes not listed will be quoted on application.

★ Furnished unless otherwise specified. Includes (1) Housing with Spacer, (1) Standard Spherical Bearing, (1) SNW Assembly and (2) Triple-Tect seals.

♦ Distance shaft should extend beyond housing centerline (CL) if pillow block is closed end style.

♥ Dimensions shown with Triple-Tect seals installed.

Note: SAF-XT pillow blocks use Unified adaptors, seals and bearings.

All Unified 500 series accessories are available for use with SAF-XT except Drop-In Triple-Tect and Split-Sphere which are Unified exclusives.

SAF-XT 500 series pillow block – inch

4-bolt, adapter mount

Shaft size (in)▲	Complete pillow block design SAF-XT	Part number ★ P4B-SFXT	Weight	A			B	C	D		E	F bolt dia.	G	H	J	K	L ♥	M	P	Q ♦	S C_L of housing to C_L of bearing	
				Std.	Optional				Min.	Max.											Exp	Non-Exp
				Triple-Tect	LER	AUX.																
2-7/16	22515	042015	29.7	4.91	4.42	7.44	11.25	3.13	8.63	9.63	1.88	1/2	1.13	1.25	6.44	2.19	2.80	3.25	7.00	1.20	0.16	0.27
2-1/2		042016	29.6																			
2-11/16	22516	042017	36.3	5.23	4.61	7.63	13.00	3.50	9.08	10.88	2.13	5/8	1.25	1.50	6.88	2.28	3.17	3.50	7.94	1.28	0.19	0.38
2-3/4		042030	36.1																			
2-15/16	22517	042019	42.3	5.48	4.86	7.88	13.00	3.50	10.00	11.00	2.13	5/8	1.25	1.50	7.38	2.41	3.42	3.75	7.94	1.38	0.19	0.38
3		042020	42.1																			
3-3/16	22518	042021	52.5	5.95	5.44	8.00	13.75	3.88	10.50	11.50	2.13	5/8	1.25	1.63	7.75	2.66	3.69	4.00	8.44	1.41	0.59	0.48
3-7/16	22520	042022	69.5	6.22	5.63	8.50	15.25	4.38	11.75	12.75	2.38	3/4	1.38	1.75	8.75	2.75	3.83	4.50	9.44	1.53	0.38	0.56
3-1/2		042023	69.2																			
3-15/16	22522	042024	92.9	6.80	6.31	8.64	16.50	4.75	12.88	14.13	2.75	3/4	1.50	2.00	9.63	3.03	4.33	4.94	10.56	1.73	0.38	0.55
4		042025	92.6																			
4-3/16	22524	042270	101.8	6.97	6.38	8.89	16.50	4.75	13.25	14.50	2.75	3/4	1.50	1.75	10.25	3.06	4.59	5.25	10.81	1.81	0.42	0.61
4-7/16	22526	042271	148	7.41	6.81	9.45	18.38	5.13	14.50	16.00	3.25	7/8	1.75	2.50	11.69	3.28	4.94	6.00	11.63	1.95	0.45	0.64
4-1/2		042272	147.7																			
4-15/16	22528	042273	173.9	7.66	7.06	10.33	20.13	5.88	15.63	17.38	3.38	1	2.00	23.50	12.13	3.41	5.36	6.00	12.44	2.05	0.50	0.69
5		042274	173.6																			
5-3/16	22530	042282	215	7.97	7.38	10.64	21.25	6.25	16.75	18.50	3.75	1	2.00	2.50	12.31	3.56	5.77	6.31	13.56	2.14	0.56	0.75
5-7/16	22532	042283	245	8.28	7.69	10.45	22.00	6.25	17.38	19.13	3.75	1	2.00	2.75	13.69	3.72	5.88	6.69	14.19	2.33	0.58	0.77
5-1/2		042284	244																			
5-15/16	22534	042303	300	8.66	7.94	10.70	24.75	6.75	19.63	21.38	4.25	1	2.00	2.88	14.56	3.84	6.44	7.06	16.31	2.47	0.58	0.78
6		042304	299																			
6-7/16	22536	042305	372	8.84	8.13	11.39	26.75	7.13	21.38	23.13	4.63	1	2.00	3.00	15.25	3.94	6.80	7.50	17.88	2.53	0.55	0.75
6-1/2		042306	371																			
6-15/16	22538	042307	407	9.34	8.63	11.47	28.00	7.50	22.13	23.88	4.50	1-1/4	2.25	3.13	16.00	4.19	7.38	7.88	18.31	2.61	0.63	0.81
7		042308	406																			
7-1/2	22544	042309	626	10.66	9.94	13.20	32.75	8.75	25.13	27.88	5.25	1-1/2	3.00	3.88	19.25	4.84	7.94	9.50	20.63	2.92	0.72	0.91
7-15/16	22544	042370	625	10.66	9.94	13.20	32.75	8.75			5.25	1-1/2	3.00	3.88	19.25	4.84	8.33	9.50	20.63	2.92	0.72	0.91
8		042371	624																			
8-7/16	23048	042372 †	408	10.50	9.06	12.58	28.75	8.00	22.50	25.00	5.00	1-1/4	2.75	3.25	17.06	4.41	9.33	8.25	18.31	2.94	0.78	0.78
8-1/2		042373	407																			
8-15/16		042374	406																			
9		042375	405																			
9-7/16	23052	042377	624	10.36	9.94	13.45	32.75	8.75	25.13	27.89	5.25	1-1/2	3.00	3.88	19.25	4.84	9.98	9.50	20.63	3.22	0.70	0.70
9-1/2		422556																				
9-15/16	23056	042378 ●	707	13.77	12.50	15.70	32.00	11.25	25.75	27.75	7.25	1-3/4	2.88	4.00	19.88	6.16	10.38	9.50	20.75	3.81	0.88	0.88
10		042376																				
10-7/16		042379 ●																				
10-1/2		422572 ●																				

▲ Sizes not listed will be quoted on application.

★ Includes (1) Housing with Spacer, (1) Standard Spherical Bearing, (1)

SNW – Assembly (SNP above 8,) and (2) Triple-Tect seals unless otherwise noted.

♦ Distance shaft should extend beyond housing centerline (CL) if pillow block is closed end style.

♥ Dimensions shown with Triple-Tect seals installed.

● Made-to-order - Consult Dodge for delivery

† Assembled to order. Consult Dodge for delivery

Note: SAF-XT pillow blocks use USAF 500 adaptors, seals, and bearings.

Part numbers for these individual components can be found on pages B24-38 through B24-41.

All USAF 500 Series accessories are available for use with SAF-XT except Drop-In Triple-Tect seals and Split-Sphere components which are Unified exclusives

SAF-XT 500 series pillow block – inch

2- and 4-bolt, adapter mount

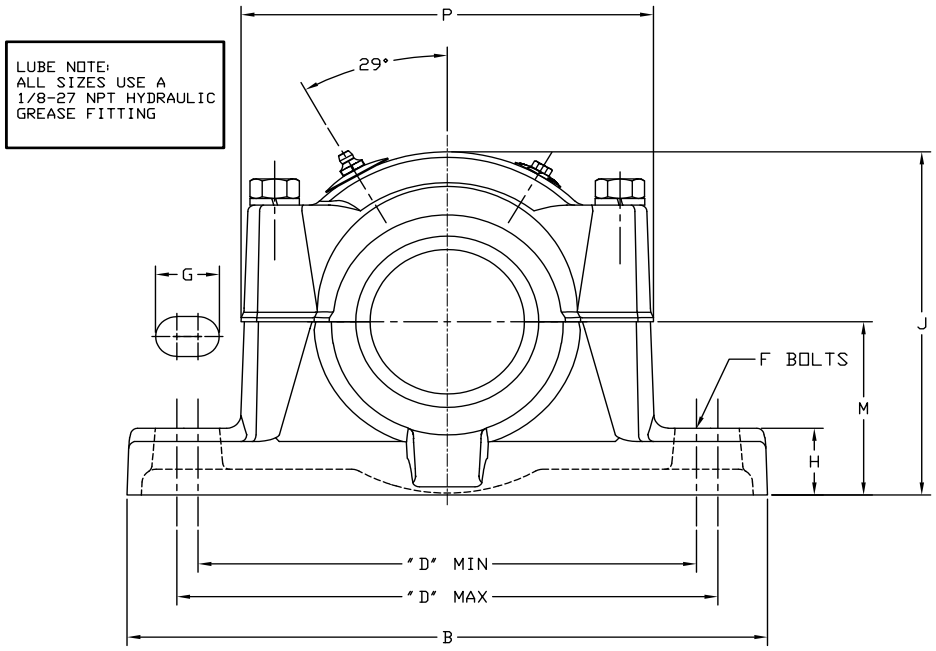

4-Bolt Pillow Block

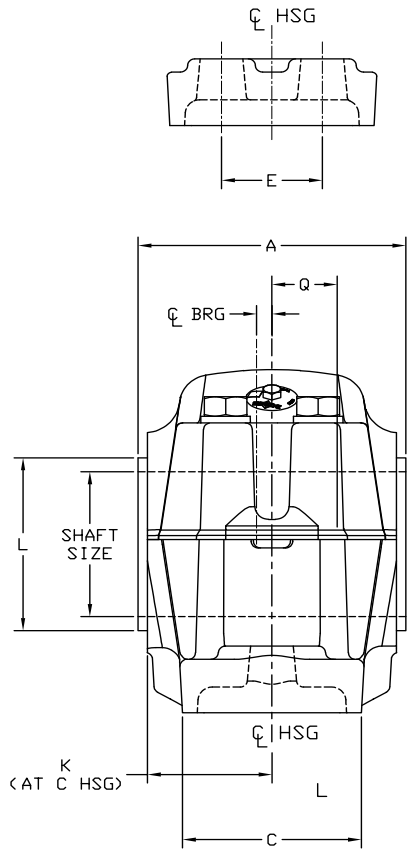

SAF-XT 500 series pillow block – inch

2- and 4-bolt, adapter mount

S-1 Size in (mm)	Shaft housing	2-bolt		4-bolt	
		Part number	Approx. weight (lbs)	Part number	Approx. weight (lbs)
1-15/16	511	042100	13.75	—	—
2-3/16	513	042103	18.00	—	—
(55,60)	513M	046323	18.00		
2-7/16, 2-1/2	515	042106	22.75	042109	22
(65)	515M	046324	22.00	046325	22
2-11/16 2-3/4	516	042111	30.5	042114	30
2-15/16 3	517	042116	31.5	042119	32
3-3/16	518	042121	38	042124	40
3-7/16 3-1/2	520	042126	51.5	042129	52
3-15/16 4	522	—	—	042131	68
4-3/16 (110)	524 524M	—	—	042134 046326	70
4-7/16 4-1/2	526	—	—	042137	108
4-15/16 5	528	—	—	042140	143
5-3/16	530	—	—	042143	120
5-7/16 5-1/2	532	—	—	042146	168
5-15/16 6	534	—	—	042149	220
6-7/16 6-1/2	536	—	—	042152	266
6-15/16 7	538	—	—	042155	295
7-1/2	544S	—	—	042167	443
7-15/16 8	544	—	—	042158	443
8-7/16, 8-1/2 8-15/16, 9	48	—	—	042161	308
9-7/16 9-1/2	52	—	—	422555	440
9-15/16 10	56	—	—	042164	549
10-7/16 10-1/2	056L	—	—	422571	620

SAFS 500 series pillow block – inch

2- and 4-bolt, adapter mount, steel housing

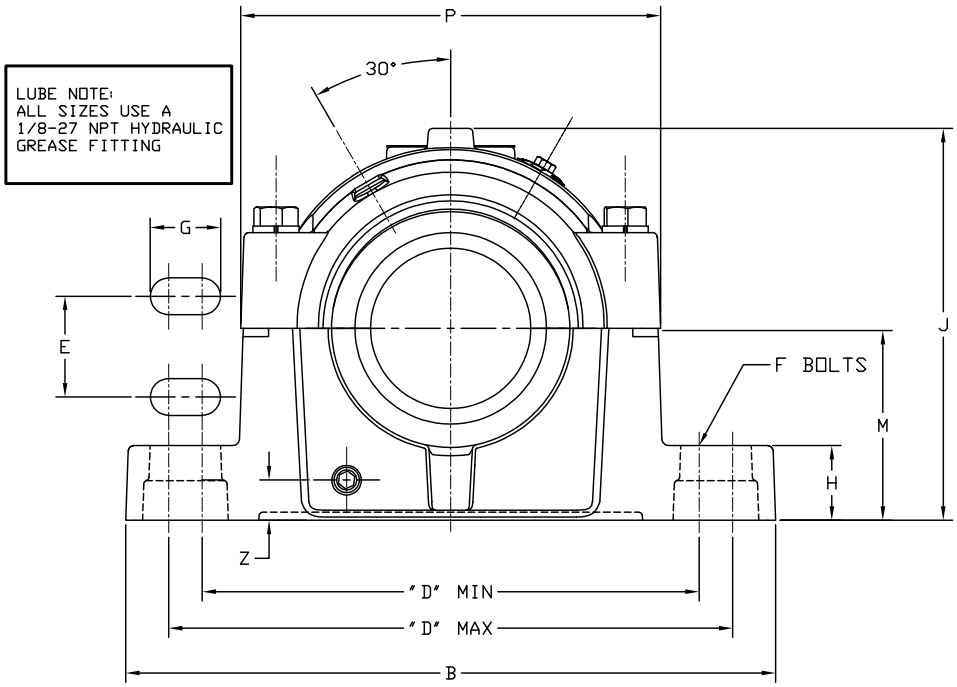

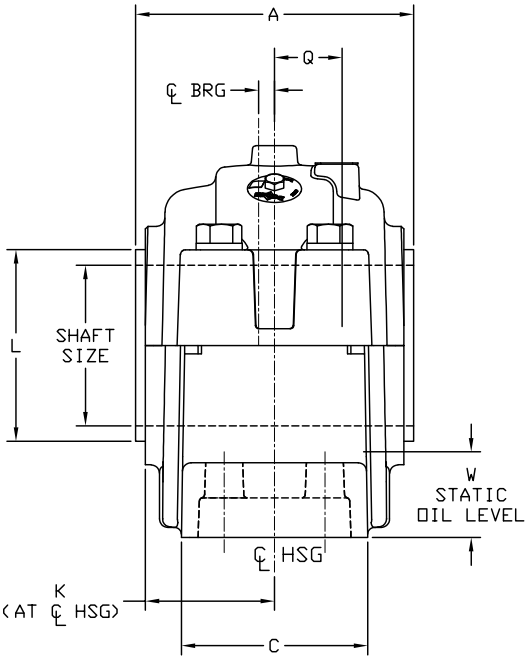

SAFS 500 series pillow block – inch

2- and 4-bolt, adapter mount, steel housing

Shaft size	Housing number	Part numbers				Approx. weight lbs	A with seals			B	C
		SAFS 2-bolt		SAFS 4-bolt			Std.	Optional			
		Complete pillow block ★	Housing only	Complete pillow block ★	Housing only		Triple-Tect	LER/ER	Aux.		
2-7/16	515	042400	042425	042410	042428	24	5.16	4.67	7.44	11.25	3.13
2-1/2	515	042401	042425	042411	042428						
2-11/16	516	042407	044231	042408	044232	32	5.42	4.80	7.63	13.00	3.50
2-3/4	516	042420	044231	042421	044232						
2-15/16	517	042402	042433	042412	042436	35	5.61	4.98	7.80	13.00	3.50
3	517	042403	042433	042413	042436						
3-3/16	518	042424	044233	042430	044234	44	6.14	5.63	8.00	13.75	3.88
3-7/16	520	042404	042440	042414	042443	74	6.41	5.81	8.50	15.25	4.38
3-1/2	520	042405	042440	042415	042443						
3-15/16	522	—	—	042416	042450	97	6.86	6.38	8.64	16.50	4.75
4	522			042417	042450						
4-3/16	524	—	—	042432	044235	120	8.03	7.44	8.89	16.50	4.75
4-7/16	526	—	—	042568	042455	160	8.47	7.88	9.45	18.38	5.13
4-1/2	526			042575	042455						
4-15/16	528	—	—	042569	042460	175	8.09	7.50	10.33	20.13	5.88
5	528			042576	042460						
5-3/16	530	—	—	042439	044236	220	8.75	8.16	10.69	21.25	6.25
5-7/16	532	—	—	042570	042465	245	9.22	8.63	10.45	22.00	6.25
5-1/2	532			042577	042465						
5-15/16	534	—	—	042571	042469	310	9.91	9.13	11.88	24.75	6.75
6	534			042578	042469						
6-7/16	536	—	—	042572	042468	345	10.34	9.63	11.39	26.75	7.13
6-1/2	536			042579	042468						
6-15/16	538	—	—	042573	042472	400	10.84	10.13	11.16	28.00	7.50
7	538			042580	042472						
7-1/2	544	—	—	042446	042477	640	12.09	11.63	13.20	32.75	8.75
7-15/16	544			042581	042477						
8	544			042574	042477						

★ Includes: (1) Housing with spacers, (1) Standard spherical bearing, (1) SNW assembly (SNP above 8") and (2) Triple-Tect seals unless otherwise noted.

SAFS 500 series pillow block – inch

2- and 4-bolt, adapter mount, steel housing

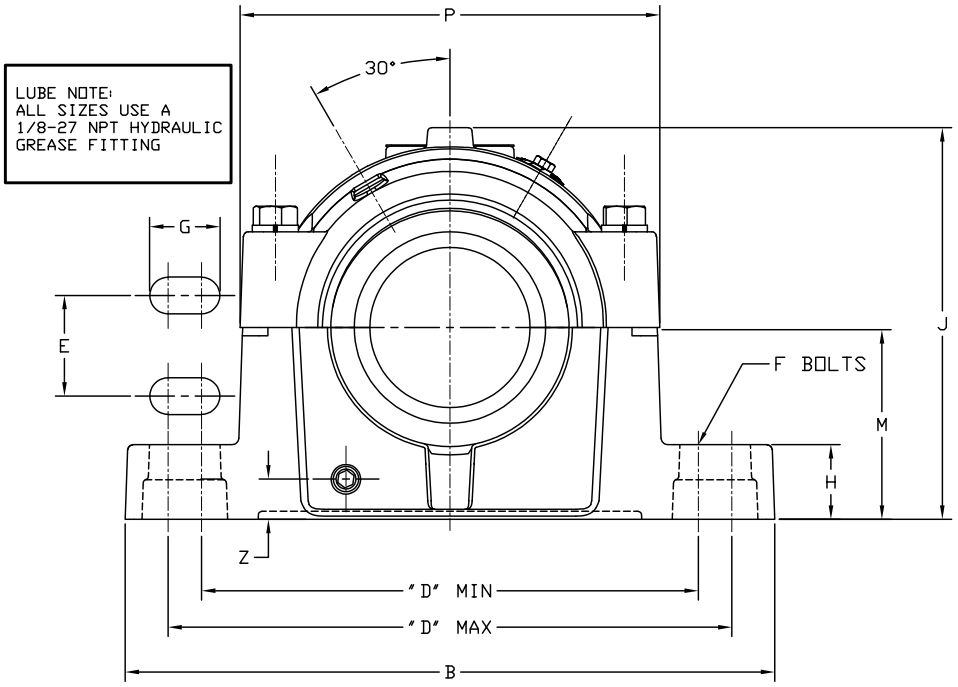

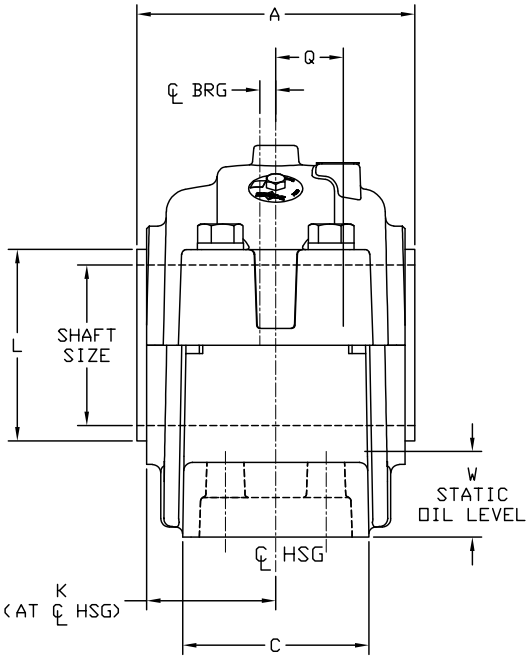

SAFS 500 series pillow block – inch

2- and 4-bolt, adapter mount, steel housing

Shaft size	Dimension D 2-bolt Min.	D 2-bolt Max.	D 4-bolt Min.	D 4-bolt Max.	E	Bolt dia. F 2B	F 4B	G	H	J	K	L ■	M	P	Q ♦	S ★	W	Z
2-7/16	8.75	9.50	8.63	9.63	1.88	5/8	1/2	1.13	1.25	6.44	2.31	2.80	3.25	7.06	1.34	0.13	1.16	0.63
2-1/2																		
2-11/16	10.13	10.63	9.88	10.88	2.13	3/4	5/8	1.25	1.50	6.88	2.38	3.17	3.50	8.00	1.47	0.19	1.25	0.63
2-3/4																		
2-15/16	10.25	10.75	10.00	11.00	2.13	3/4	5/8	1.13, 2B	1.50	7.38	2.47	3.42	3.75	8.25	1.56	0.19	1.38	0.75
3								1.25, 4B										
3-3/16	10.75	11.25	10.50	11.50	2.13	3/4	5/8	1.25	1.63	7.75	2.75	3.69	4.00	8.25	1.70	0.19	1.47	0.69
3-7/16	11.88	12.63	11.75	12.75	2.38	7/8	3/4	1.38	1.75	8.75	2.91	3.83	4.50	9.81	1.89	0.19	1.64	0.94
3-1/2																		
3-15/16	—	—	12.88	14.13	2.75	—	3/4	1.50	2.00	9.63	3.13	4.33	4.94	10.63	2.08	0.19	1.80	1.13
4																		
4-3/16	—	—	13.25	14.50	2.75	—	3/4	1.50	1.75	10.25	3.66	4.59	5.25	11.50	2.22	0.19	1.84	1.00
4-7/16	—	—	14.50	16.00	3.25	—	7/8	1.75	2.50	11.56	3.88	4.94	6.00	12.81	2.41	0.19	2.34	1.28
4-1/2																		
4-15/16	—	—	15.63	17.38	3.78	—	1	2.00	2.50	12.00	3.69	5.36	6.00	13.56	2.53	0.19	2.03	1.19
5																		
5-3/16	—	—	16.75	18.50	3.75	—	1	2.00	2.50	12.81	4.06	5.77	6.31	14.50	2.69	0.19	2.03	1.19
5-7/16	—	—	17.38	19.13	3.75	—	1	2.00	2.75	13.69	4.25	5.88	6.69	15.13	2.89	0.19	2.09	1.22
5-1/2																		
5-15/16	—	—	19.38	21.63	4.25	—	1	2.00	2.88	14.56	4.63	6.44	7.06	16.81	3.13	0.19	2.19	1.56
6																		
6-7/16	—	—	21.38	23.13	4.63	—	1	2.00	3.00	15.25	4.81	6.80	7.50	17.19	3.08	0.19	2.42	1.09
6-1/2																		
6-15/16	—	—	22.13	23.88	4.50	—	1-1/4	2.25	3.13	16.13	5.13	7.38	7.88	17.08	3.23	0.19	2.53	1.31
7																		
7-1/2																		
7-15/16	—	—	25.13	27.88	5.25	—	1-1/2	3.00	3.88	19.25	5.75	7.44 8.33	9.50	20.75	3.64	0.19	3.25	1.88
8																		

♦ Distance shaft should extend beyond housing centerline of pillow block is closed end style.

★ Non-expansion bearing offset from centerline. For Expansion bearing S = 0.

■ Based on Triple-Tect seals.

SAFS and SAF-XT 500 series pillow block – inch

Seals

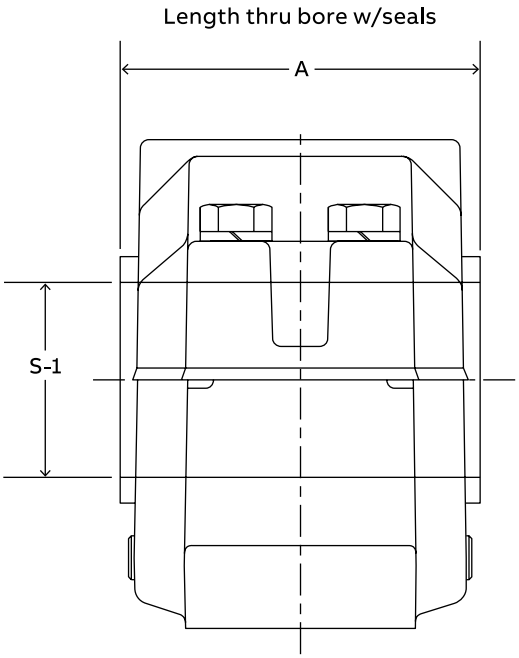

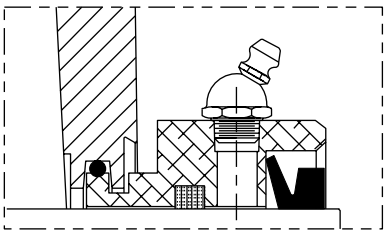

Auxiliary Taconite Seal
For dusty environments and low to moderate speeds

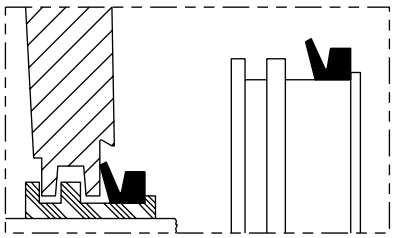

Triple-Tect Seal
General purpose seal for wet or dirty environments

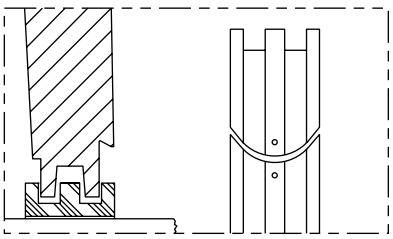

Split Seal
Permits easy installation in hard-to-reach applications without removing shaft. Non-metallic split LER

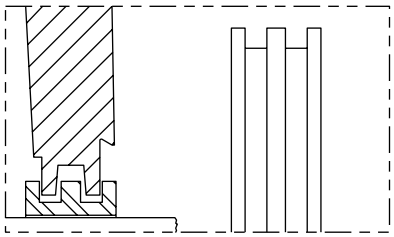

LER Seal
High speed seal for relatively clean environments

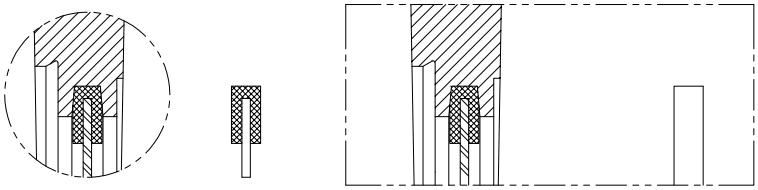

End Cover Seal
Allows use of open shaft housing as closed-end

SAFS and SAF-XT 500 series pillow block – inch

Seals

S-1 Shaft size	Housing	Seal group	Part numbers			
			Triple-Tect (TT)	# Metal Labyrinth (LER)	Auxiliary Taconite (AUX)	End cover
1-15/16	511	12	043540	042512	041687	040702
2-3/16	513	14	043541	042513	041688	040703
2-7/16	515	20	043542	042514	042380	040704
2-1/2			043543	042515	040890	040704
2-11/16	516	24	043544	042516	042381	040705
2-3/4			043545	042517	040891	040705
2-15/16	517	28	043546	042518	042382	040706
3			043547	042519	040918	040706
3-3/16	518	34	043548	042520	040892	040707
3-7/16	520	46	043549	042521	042383	040708
3-1/2			043550	042522	040919	040708
3-15/16	522	50	043551	042523	042384	040709
4			043552	042524	040893	040709
4-3/16	524	52	043553	042525	044360	040710
4-7/16	526	54	043554	042526	042385	040711
4-1/2			043555	042527	042386	040711
4-15/16	528	56	043556	042528	042387	040712
5			043557	042529	040894	040712
5-3/16	530	58	043558	042530	—	040713
5-7/16	532	60	043559	042531	042388	040714
5-1/2			043574	042532	040895	040714
5-15/16	534	64	043560	042533	042389	040681
6			043561	042534	041646	040681
6-7/16	536	68	043562	042535	042390	040682
6-1/2			043563	042536	042391	040682
6-15/16	538	72	043564	042537	042392	040683
7			043565	042538	043109	040683
7-3/16	540	74	046421	043386	040690	040691
7-1/2	544S	76	043567	042539	040896	040684
7-15/16	544	78	043566	042540	042393	040685
8			043568	042541 *	042394	040685
8-7/16	048	90	043569	042542 *	040897	042368
8-1/2			043570	042543 *	040898	042368
8-15/16			043571	042544 *	040899	042368
9			043572	042545 *	040995	042368
9-7/16	052	84	043538	042510 *	040900	422606
9-1/2			422545	042594 *	040901	422606
9-15/16	056	92	043575	042511 *	—	042369
10			043573	041082 *	042395	042369
10-7/16	056L	94	047940	042036 *	—	042397
10-1/2			047941	422573 *	042396	042397

Note: # LER seals are made from aluminum unless otherwise noted by the * symbol.

If an * appears by the part number, the LER seal is manufactured from steel.

SAFS and SAF-XT 500 series pillow block – inch

22200K and 23000K spherical roller bearings

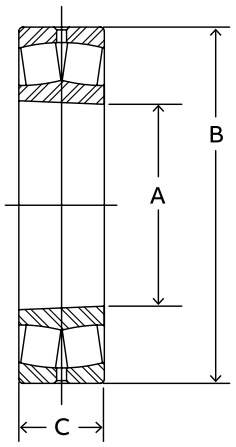

S-1 Shaft size	Housing	Bearing number	Part number	Approx. weight (lbs)	A in (mm)	B in (mm)	C in (mm)
1-15/16	511	22211K	422123	1.8	2.1654 (55)	3.9370 (100)	0.9843 (25)
2-3/16	513	22213K	422124	3.2	2.5591 (65)	4.7244 (120)	1.2205 (31)
2-7/16 2-1/2	515	22215K	422001	3.6	2.9528 (75)	5.1181 (130)	1.2205 (31)
2-11/16 2-3/4	516	22216K	422003	4.4	3.1496 (80)	5.5188 (140)	1.2992 (33)
2-15/16 3	517	22217K	422005	5.5	3.3465 (85)	5.9055 (150)	1.4173 (36)
3-3/16	518	22218K	422007	7.0	3.5433 (90)	6.2992 (160)	1.5748 (40)
3-7/16 3-1/2	520	22220K	422009	10.4	3.9370 (100)	7.0866 (180)	1.8110 (46)
3-15/16 4	522	22222K	422011	14.9	4.3307 (110)	7.8740 (200)	2.0866 (53)
4-3/16	524	22224K	422013	18.7	4.7244 (120)	8.4646 (215)	2.2865 (58)
4-7/16 4-1/2	526	22226K	422015	23.4	5.1181 (130)	9.0551 (230)	2.5197 (64)
4-15/16 5	528	22228K	422017	29.5	5.5118 (140)	9.8425 (250)	2.6772 (68)
5-3/16	530	22230K	422019	37.5	5.9055 (150)	10.6299 (270)	2.8740 (73)
5-7/16 5-1/2	532	22232K	422021	48.1	6.2992 (160)	11.4173 (290)	3.1496 (80)
5-15/16 6	534	22234K	422023	58.0	6.6929 (170)	12.2047 (310)	3.3858 (86)
6-7/16 6-1/2	536	22236K	422025	60.8	7.0866 (180)	12.5984 (320)	3.3858 (86)
6-15/16 7	538	22238K	422027	78.9	7.4803 (190)	13.3858 (340)	3.6220 (92)
7-3/16	540	22240K	422064	94.1	7.8740 (200)	14.1732 (360)	3.8583 (98)
7-1/2	544S	22244K	422029	129.0	8.6614 (220)	14.7480 (400)	4.2520 (108)
7-15/16 8	544						
8-7/16 8-1/2 8-15/16 9	048	23048K	422031	73.4	9.4488 (240)	14.1732 (360)	3.6220 (92)
9-7/16 9-1/2	052	23052K	422543	106.0	10.2362 (260)	15.7480 (400)	4.0945 (104)
9-15/16 10	056	23056K	422030	114.0	11.0236 (280)	16.5354 (430)	4.1732 (106)
10-7/16 10-1/2	056L						

SAFS and SAF-XT 500 series pillow block – inch

Adapter assembly

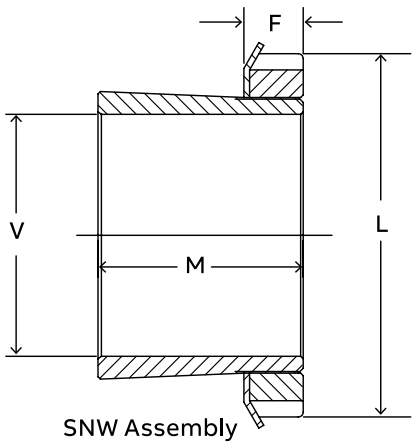

SNW Assembly

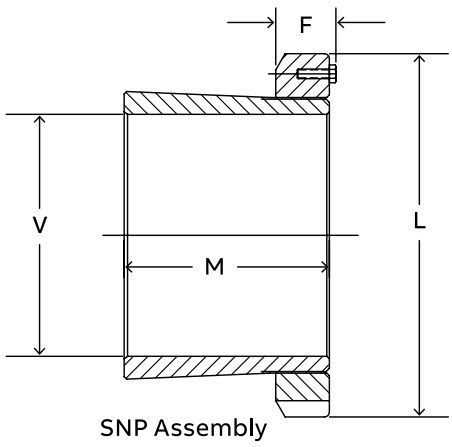

SNP Assembly

V Shaft size	Housing	SNW/SNP number	Part number	Approx. weight (lbs)	L	F max	M
1-15/16	511	H311-SNW-115	046352	0.8	2.97	0.58	1.85
2-3/16	513	H313-SNW-203	046353	1.6	3.38	0.64	2.10
2-7/16	515	H315-SNW-207	046354	2.6	3.88	0.69	2.29
2-1/2		H315-SMW-208	046355	2.3			
2-11/16	516	H316-SNW-211	046356	2.6	4.16	0.69	2.37
2-3/4		H316-SNW-212	046357	2.6			
2-15/16	517	H317-SNW-215	046358	3.0	4.41	0.72	2.47
3		H317-SNW-300	046359	2.5			
3-3/16	518	H318-SNW-303	046360	3.1	4.66	0.80	2.63
3-7/16	520	H320-SNW-307	046361	4.6	5.19	0.83	2.87
3-1/2		H320-SNW-308	046362	4.4			
3-15/16	522	H322-SNW-315	046363	5.6	5.72	0.86	3.19
4		H322-SNW-400	046364	5.0			
4-3/16	524	H3124-SNW-403	046430	6.5	6.12	0.92	3.47
4-7/16	526	H3126-SNW-407	046431	9.2	6.75	0.95	3.76
4-1/2		H3126-SNW-408	046432	8.6			
4-15/16	528	H3128-SNW-415	046433	10.0	7.09	1.02	3.97
5		H3128-SNW-500	046434	9.0			
5-3/16	530	H3130-SNW-503	043618	12.7	7.69	1.08	4.22
5-7/16	532	H3132-SNW-507	043619	15.9	8.06	1.14	4.57
5-1/2		H3132-SNW-508	043634	15.0			
5-15/16	534	H3134-SNW-515	043620	17.6	8.66	1.23	4.83
6		H3134-SNW-600	043621	17.0			
6-7/16	536	H3136-SNW-607	043622	17.0	9.06	1.27	5.02
6-1/2		H3136-SNW-608	043623	18.0			
6-15/16	538	H3138-SNW-615	043624	18.0	9.47	1.30	5.26
7		H3138-SNW-700	043625	17.0			
7-3/16	540	H3140-SNW-703	046545	30.7	9.84	1.36	5.48
7-1/2	544S	H3144-SNW-708	043627	30.2	11.00	1.42	5.90
7-15/16	544	H3144-SNW-715	043626	36.0			
8		H3144-SNW-800	043628	34.7			
8-7/16	048	H3048-SNP-807	043629	38.0	11.44	1.73	5.44
8-1/2		H3048-SNP-808	043630	30.0			
8-15/16		H3048-SNP-815	043631	28.0			
9		H3048-SNP-900	043632	22.0			
9-7/16	052	H3052-SNP-907	043585	41.1	12.19	1.80	6.02
9-1/2		H3052-SNP-908	422538	40.0			
9-15/16	056	H3056-SNP-915	043586	43.7	13.00	1.89	6.19
10		H3056-SNP-1000	043633	42.0			
10-7/16	056L	H3056-SNP-1007	043580	30.0			
10-1/2		H3056-SNP-1008	422567	28.0			

USAF 600 series pillow block – inch

2- and 4-bolt, adapter mount

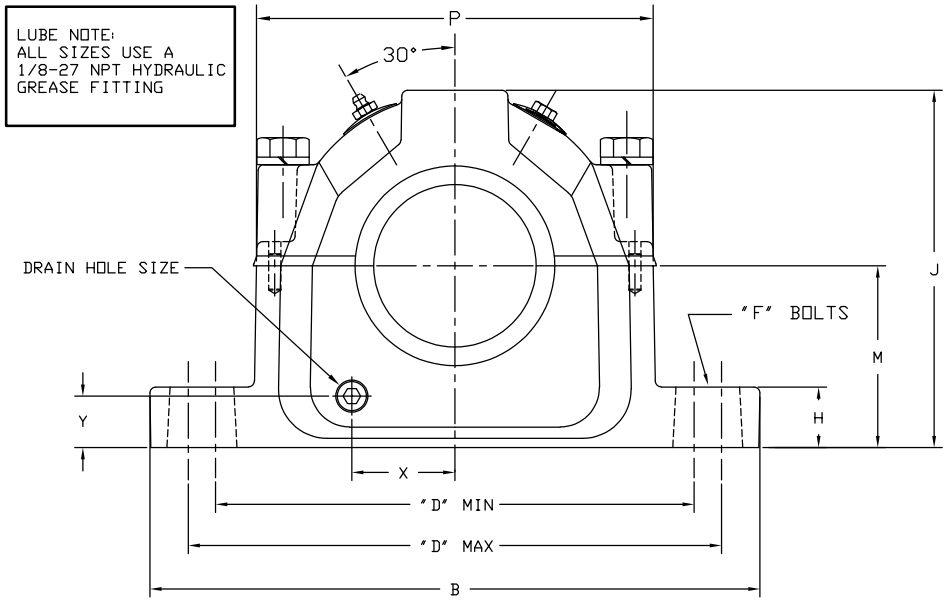

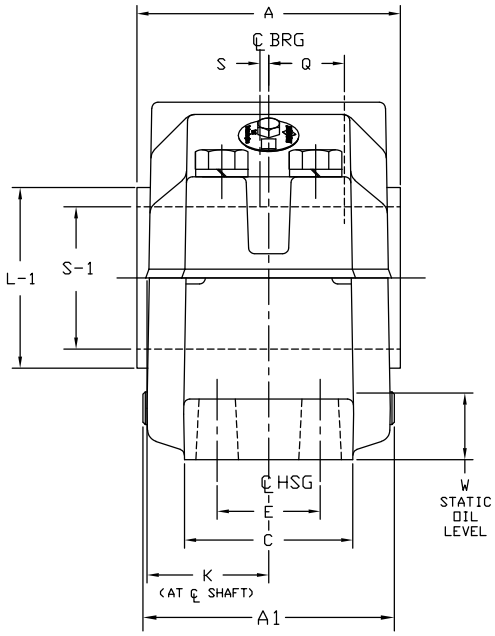

USAF 600 series pillow block – inch

2- and 4-bolt, adapter mount

Shaft size S-1	Complete pillow block part number	Housing with stab ring part number	Bearing part number	Dynamic capacity (C) lbs	Max rpm (grease)	SNW part number	Triple-Tect part number	TTDN part number	# LER part number	End cover
1-11/16	P2B610-USAF-111TT	H2S-610-USAF	BRG22310KC3	42,500	3,400	H2310-SNW-111	10TT111	—	10LER111	EC10
	035929	035431	423372			046680	043579		* 042199	040701
1-15/16	P2B611-USAF-115TT	H2S-611-USAF	BRG22311KC3	50,000	3,200	H2311-SNW-115	12TT115	12TTDN115	12LER115	EC12
	039404	039760	423102			046551	043540	039582	042512	040702
	P4B611-USAF-115TT	H4S-611-USAF	BRG22311KC3	50,000	3,200	H2311-SNW-115	12TT115	12TTDN115	12LER115	EC12
	039413	039762	423102			046551	043540	039582	042512	040702
2-3/16	P2B613-USAF-203TT	H2S-613-USAF	BRG22313KC3	65,500	2,600	H2313-SNW-203	14TT203	14TTDN203	14LER203	EC14
	039405	039764	423104			046552	043541	039583	042513	040703
	P4B613-USAF-203TT	H4S-613-USAF	BRG22313KC3	65,500	2,600	H2313-SNW-203	14TT203	14TTDN203	14LER203	EC14
	039414	039766	423104			046552	043541	039583	042513	040703
2-7/16	P2B615-USAF-207TT	H2S-615-USAF	BRG22315KC3	83,000	2,200	H2315-SNW-207	20TT207	20TTDN207	20LER207	EC20
	039406	039768	423106			046553	043542	039538	042514	040704
	P4B615-USAF-207TT	H4S-615-USAF	BRG22315KC3	83,000	2,200	H2315-SNW-207	20TT207	20TTDN207	20LER207	EC20
	039415	039770	423106			046553	043542	039538	042514	040704
2-11/16	P2B616-USAF-211TT	H2S-616-USAF	BRG22316KC3	93,000	2,200	H2316-SNW-211	24TT211	24TTDN211	24LER211	EC24
	035930	035432	423373			046682	043544	039855	042516	040705
	P4B616-USAF-211TT	H4S-616-USAF	BRG22316KC3	93,000	2,200	H2316-SNW-211	24TT211	24TTDN211	24LER211	EC24
	035931	035433	423373			046682	043544	039855	042516	040705
2-15/16	P2B617-USAF-215TT	H2S-617-USAF	BRG22317KC3	102,000	2,000	H2317-SNW-215	28TT215	28TTDN215	28LER215	EC28
	039407	039772	423108			046554	043546	039530	042518	040706
	P4B617-USAF-215TT	H4S-617-USAF	BRG22317KC3	102,000	2,000	H2317-SNW-215	28TT215	28TTDN215	28LER215	EC28
	039416	039774	423108			046554	043546	039530	042518	040706
3-7/16	P4B620-USAF-307TT	H4S-620-USAF	BRG22320KC3	146,000	1,700	H2320-SNW-307	46TT307	46TTDN307	46LER307	EC46
	039417	039776	423110			046555	043549	039859	042521	040708
4-3/16	P4B624-USAF-403TT	H4S-624-USAF	BRG22324KC3	204,000	1,400	H2324-SNW-403	52TT403	52TTDN403	52LER403	EC52
	039419	039780	422140			046557	043553	039863	042525	040710
4-7/16	P4B626-USAF-407TT	H4S-626-USAF	BRG22326KC3	236,000	1,300	H2326-SNW-407	54TT407	54TTDN407	54LER407	EC54
	039420	039781	423114			046558	043554	039864	042526	040711
4-15/16	P4B628-USAF-415TT	H4S-628-USAF	BRG22328KC3	275,000	1,200	H2328-SNW-415	56TT415	56TTDN415	56LER415	EC56
	039421	039553	422035			046559	043556	039866	042528	040712
5-3/16	P4B630-USAF-503TT	H4S-630-USAF	BRG22330KC3	310,000	1,100	H2330-SNW-503	58TT503	—	58LER503	EC58
	039422	039782	423116			046560	043558		042530	040713
5-7/16	P4B632-USAF-507TT	H4S-632-USAF	BRG22332KC3	325,000	1,000	H2332-SNW-507	60TT507	—	60LER507	EC60
	039423	039783	423118			046561	043559		042531	040714
5-15/16	P4B634-USAF-515TT	H4S-634-USAF	BRG22334KC3	360,000	950	H2332-SNW-515	64TT515	—	64LER515	EC64
	039424	039784	423120			046562	043560		042533	040681
6	P4B634-USAF-600TT	H4S-634-USAF	BRG22334KC3	360,000	950	H2334-SNW-600	64TT600	—	64LER600	EC64
	039425	039784	423120			046563	043561		042534	040681
6-15/16	P4B638-USAF-615TT	H4S-638-USAF	BRG22338KC3	415,000	850	H2338-SNW-615	72TT615	—	72LER615	EC72
	039426	039785	423122			046564	043564		042537	040683
7	P4B638-USAF-700TT	H4S-638-USAF	BRG22338KC3	415,000	850	H2338-SNW-700	72TT700	—	72LER700	EC72
	039427	039785	423122			046565	043565		042538	040683

Note: LER seals are made from aluminum unless otherwise noted by the * symbol.

If an * appears by the part number, the LER seal is manufactured from steel.

USAF 600 series pillow block – inch

2- and 4-bolt, adapter mount

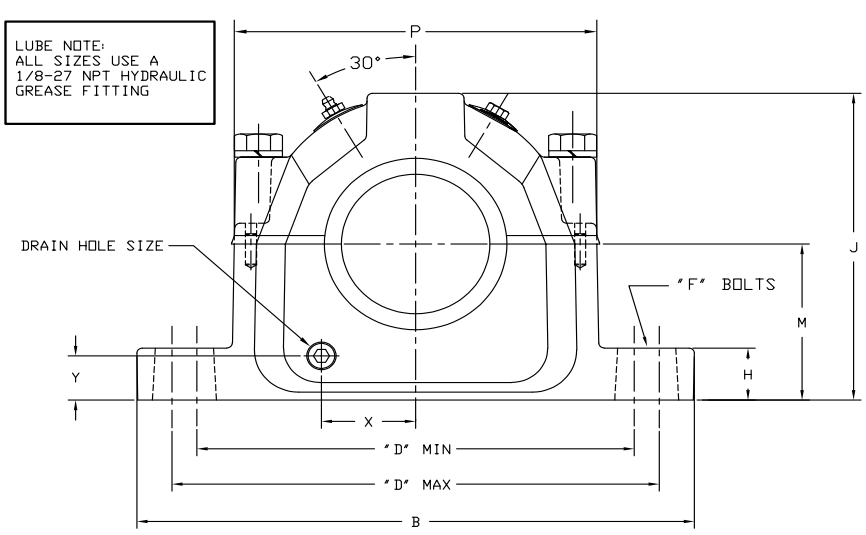

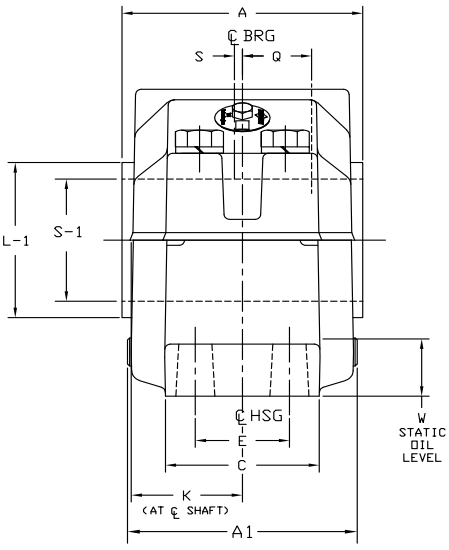

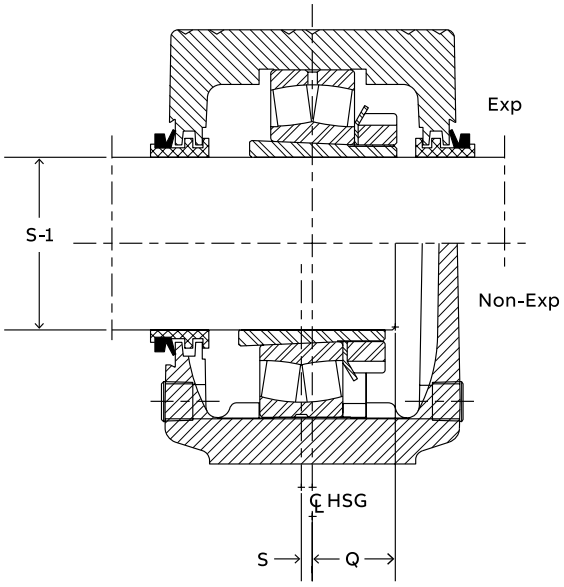

USAF 600 series pillow block – inch

2- and 4-bolt, adapter mount

S1 Shaft size	Housing	A1 ▲	B	C	D				E	F	
					2-bolt		4-bolt			bolt diameter	
					Min.	Max.	Min.	Max.		2-bolt	4-bolt
1-11/16	610	4.70	10.63	2.75	7.75	9.00	—	—	—	5/8	—
1-15/16	611	4.64	11.00	3.38	8.13	9.50	8.13	9.50	1.88	5/8	1/2
2-3/16	613	5.44	12.59	3.50	9.63	11.00	9.63	11.00	2.13	3/4	5/8
2-7/16	615	6.16	13.63	3.88	10.25	11.75	10.38	11.63	2.13	3/4	5/8
2-11/16	616	6.38	14.17	3.88	10.88	12.38	10.63	12.50	2.13	3/4	5/8
2-15/16	617	6.78	15.36	4.34	11.63	13.13	11.63	13.13	2.38	7/8	3/4
3-7/16	620	8.05	16.50	4.72	—	—	13.25	14.50	2.75	—	3/4
4-3/16	624	9.36	20.88	6.25	—	—	16.75	18.25	3.75	—	1
4-7/16	626	9.92	21.66	6.25	—	—	17.38	19.25	3.75	—	1
4-15/16	628	9.91	24.75	6.75	—	—	19.38	21.63	4.25	—	1
5-3/16	630	10.41	26.75	7.13	—	—	20.88	23.63	4.63	—	1
5-7/16	632	10.81	28.00	7.50	—	—	21.63	24.38	4.50	—	1-1/4
5-15/16 6	634	11.53	28.75	8.00	—	—	22.50	25.00	5.00	—	1-1/4
6-15/16 7	638	12.30	32.75	8.88	—	—	24.75	27.88	5.25	—	1-1/2

S-1 Shaft size	Housing	H	J	K	M	P	Q ★	S ●	W Static oil level	X	Y	Drain hole size
1-11/16	610	1.41	5.72	2.20	3.00	6.13	1.38	0.22	1.38	1.53	0.98	1/8-27NPSI
1-15/16	611	1.28	6.19	2.16	3.25	6.50	1.42	0.13	1.44	1.66	1.03	1/8-27NPSI
2-3/16	613	1.06	6.75	2.42	3.50	7.44	1.98	0.19	1.41	1.97	0.95	1/4-18NPSF
2-7/16	615	1.44	7.75	2.84	4.00	8.66	1.77	0.19	1.59	2.25	1.13	3/8-18NPSF
2-11/16	616	1.22	8.25	2.95	4.25	9.03	1.83	0.19	1.69	2.38	1.17	3/8-18NPSF
2-15/16	617	1.66	8.75	3.16	4.50	9.78	1.91	0.19	1.75	2.63	1.25	3/8-18NPSF
3-7/16	620	1.50	10.25	3.64	5.25	11.25	2.30	0.19	2.03	3.19	1.38	1/2-14NPSF
4-3/16	624	2.38	12.50	4.33	6.31	14.94	2.64	0.19	2.38	3.59	1.33	1/2-14NPSF
4-7/16	626	2.34	13.31	4.63	6.69	14.91	2.84	0.19	2.44	4.03	1.33	1/2-14NPSF
4-15/16	628	2.88	14.56	4.63	7.06	16.81	3.09	0.19	2.56	4.16	1.33	1/2-14NPSF
5-3/16	630	3.00	15.13	4.88	7.50	17.19	3.27	0.19	2.63	4.22	1.63	1/2-14NPSF
5-7/16	632	3.13	15.81	5.26	7.88	18.00	3.44	0.19	2.69	4.75	1.61	1/2-14NPSF
5-15/16 6	634	3.38	16.63	5.44	8.25	19.00	3.59	0.19	2.75	4.91	1.53	1/2-14NPSF
6-15/16 7	638	3.75	18.88	5.81	9.50	21.25	3.89	0.19	3.38	5.44	2.03	1/2-14NPSF

▲ Housing width with drain plugs.

★ Distance shaft should extend beyond housing centerline if pillow block is closed end style.

● Non-expansion bearing offset from centerline. For expansion bearing S = 0.

USAF 600 series pillow block – inch

22300K spherical roller bearings

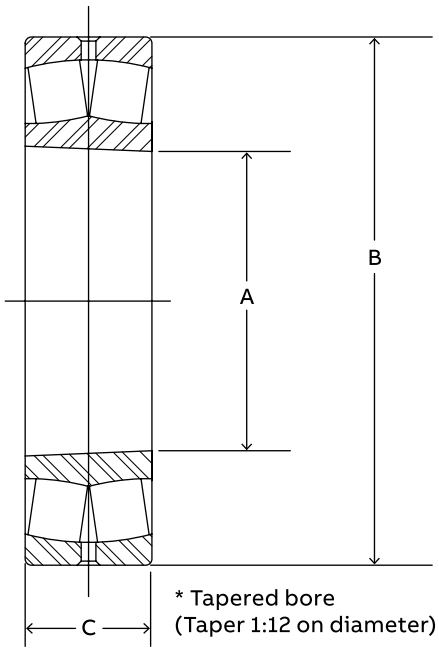

Shaft size	Housing	Bearing number	Part number	Approx. weight (lbs)	A* in (mm)	B in (mm)	C in (mm)
1-7/16	609	22309K	423100	3.0	1.7717 (45)	3.9370 (100)	1.4171 (36)
1-11/16	610	22310K	423372	3.9	1.9685 (50)	4.3307 (110)	1.5748 (40)
1-15/16	611	22311K	423102	5.1	2.1654 (55)	4.7244 (120)	1.6929 (43)
2-3/16	613	22313K	423104	7.8	2.5591 (65)	5.5118 (140)	1.8898 (48)
2-7/16	615	22315K	423106	11.5	2.9528 (75)	6.2992 (160)	2.1654 (55)
2-11/16	616	22316K	423373	13.1	3.1496 (80)	6.6929 (170)	2.2835 (58)
2-15/16	617	22317K	423108	15.7	3.3465 (85)	7.0866 (180)	2.3622 (60)
3-7/16	620	22320K	423110	28.0	3.9370 ((100)	8.4646 (215)	2.8740 (73)
3-15/16	622	22322K	423112	38.8	4.3307 (110)	9.4488 (240)	3.1496 (80)
4-3/16	624	22324K	422140	48.3	4.7244 (120)	10.2362 (260)	3.3858 (86)
4-7/16	626	22326K	423114	59.7	5.1181 (130)	11.0236 (280)	3.6614 (93)
4-15/16	628	22328K	422035	75.4	5.5118 (140)	11.8110 (300)	4.0157 (102)
5-3/16	630	22330K	423116	90.4	5.9055 (150)	12.5984 (320)	4.2520 (108)
5-7/16	632	22332K	423118	113.0	6.2992 (160)	13.3858 (340)	4.4882 (114)
5-15/16 6	634	22334K	423120	132.0	6.6929 (170)	14.1732 (360)	4.7244 (120)
6-15/16 7	638	22338K	423122	179.0	7.4803 (190)	15.7480 (400)	5.1969 (132)

USAF 600 series pillow block – inch

Adapter assembly

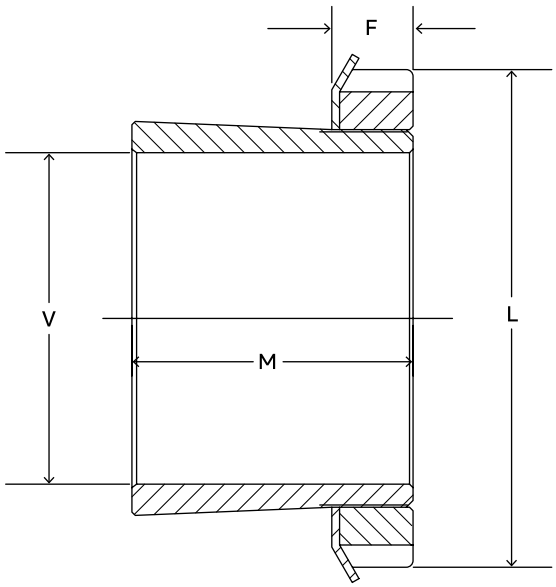

V Shaft size	Housing	Adapter number	Part number	Aprox. weight (lbs)	L	F max	M
1-7/16	609	H2309-107	046550	0.63	2.53	0.52	1.97
1-11/16	610	H2310-111	046680	0.80	2.69	0.58	2.17
1-15/16	611	H2311-115	046551	0.86	2.97	0.58	2.32
2-3/16	613	H2313-203	046552	1.50	3.38	0.64	2.56
2-7/16	615	H2315-207	046553	2.55	3.88	0.69	2.87
2-11/16	616	H2316-211	046682	3.00	4.16	0.69	3.07
2-15/16	617	H2317-215	046554	3.20	4.41	0.72	3.23
3-7/16	620	H2320-307	046555	5.30	5.19	0.83	3.82
3-15/16	622	H2322-315	046556	5.75	5.72	0.86	4.13
4-3/16	624	H2324-403	046557	7.4	6.12	0.92	4.41
4-7/16	626	H2326-407	046558	10.7	6.75	0.95	4.76
4-15/16	628	H2328-415	046559	12.0	7.09	1.02	5.16
5-3/16	630	H2330-503	046560	15.6	7.69	1.08	5.47
5-7/16	632	H2332-507	046561	21.7	8.06	1.14	5.79
5-15/16	634	H2334-515	046562	22.0	8.66	1.23	8.06
6		H2334-600	046563	21.0			
6-15/16	638	H2338-615	046564	22.9	9.47	1.30	6.65
7		H2338-700	046565	21.6			

USDAF large-bore pillow block – inch

Adapter mount

Shaft size	Housing	Open housing part number**	Closed housing part number**	Bearing part number	Dynamic capacity (C) lbs	Max rpm LER (grease)	SNP part number	Triple-Tect part number	# LER part number	Aux part number
10-15/16	060	H4S-USDAF-060 422580	CH4S-USDAF-060 037426	23060K 422582	440,000	630	H3060-SNP-1015 043581	96TT1015 047942	96LER1015 042037	96AUX1015 045781
11	060	H4S-USDAF-060 422580	CH4S-USDAF-060 037426	23060K 422582	440,000	630	H3060-SNP-1100 422576	96TT1100 047943	96LER1100 422588	96AUX1100 044440
11-7/16	064	H4S-USDAF-064 422502	CH4S-USDAF-064 037427	23064K 422531	455,000	600	H3064-SNP-1107 043582	98TT1107 047944	98LER1107 042038	98AUX1107 045784
11-1/2	064	H4S-USDAF-064 422502	CH4S-USDAF-064 037427	23064K 422531	455,000	600	H3064-SNP-1108 043583	98TT1108 047945	98ER1108 042039	98AUX1107 045787
11-15/16	064L	H4S-USDAF-064L 422529	CH4S-USDAF-064L 037428	23064K 422531	455,000	600	H3064L-SNP-1115 043584	100TT1115 047946	1OOER1115 042040	100AUX1115 045790

Note: LER seals are made from aluminum unless otherwise noted by the * symbol.

If an * appears by the part number, the LER seal is manufactured from steel.

USDAF large-bore pillow block – inch

Adapter mount

Shaft size.	Housing	Open housing part number**	Closed housing part number**	Bearing part number	Dynamic capacity (C) lbs	Max rpm LER (grease)	SNP part number	Triple-Tect part number	# LER part number	Aux part number
12	064L	H4S-USDAF-064L 422529	CH4S-USDAF-064L 037428	23064K 422531	455,000	600	H3064L-SNP-1200 422525	100TT1200 047947	100ER1200 422535	100AUX1200 045793
12-7/16	068	H4S-USDAF-068 035183	CH4S-USDAF-068 035185	23068K 421282	530,000	560	H3064-SNP-1207 047632	102TT1207 047948	102ER1207 046498	102AUX1207 046567
12-1/2	068	H4S-USDAF-068 035183	CH4S-USDAF-068 035185	23068K 421282	530,000	560	H3068-SNP-1208 047635	102TT1208 047949	102ER1208 046499	102AUX1208 046568
12-15/16	072	H4S-USDAF-072 044164	CH4S-USDAF-072 037429	23072K 422036	550,000	530	H3072-SNP-1215 043635	104TT1215 047950	104ER1215 042090	102AUX1215 045796
13	072	H4S-USDAF-072 044164	CH4S-USDAF-072 037429	23072K 422036	550,000	530	H3072-SNP-1300 043636	104TT1300 047951	072ER1300 042091	104AUX1300 045799
13-7/16	072L	H4S-USDAF-072L 044165	CH4S-USDAF-072L 037430	23072K 422036	550,000	530	H3072L-SNP-1307 043637	106TT1307 047952	106ER1307 042092	106AUX1307 045802
13-1/2	072L	H4S-USDAF-072L 044165	CH4S-USDAF-072L 037430	23072K 422036	550,000	530	H3072L-SNP-1308 043638	106TT1308 047953	106ER1308 042093	106AUX1308 045805
13-15/16	076	H4S-USDAF-076 044166	CH4S-USDAF-076 037431	23076K 422054	570,000	500	H3076-SNP-1315 043639	108TT1315 047954	108ER1315 042094	108AUX1315 045808
14	076	H4S-USDAF-076 044166	CH4S-USDAF-076 037431	23076K 422054	570,000	500	H3076-SNP-1400 043640	108TT1400 047955	108ER1400 042095	108AUX1400 046569
15	080	H4S-USDAF-080 035417	CH4S-USDAF-080 035418	23080K 421283	680,000	450	H3080-SNP-1500 040830	110TT1500 047956	110ER1500 050474	110AUX1500 046570
15-3/4	84	H4S-USDAF-084 035943	CH4S-USDAF-084 035944	23084K 421284	710,000	450	H3084-SNP-1512 047636	112TT1512 047957	112ER1512 046566	112AUX1512 046572

Note: LER seals are made from aluminum unless otherwise noted by the * symbol.

If an * appears by the part number, the LER seal is manufactured from steel.

USDAF large-bore pillow block – inch

Adapter mount

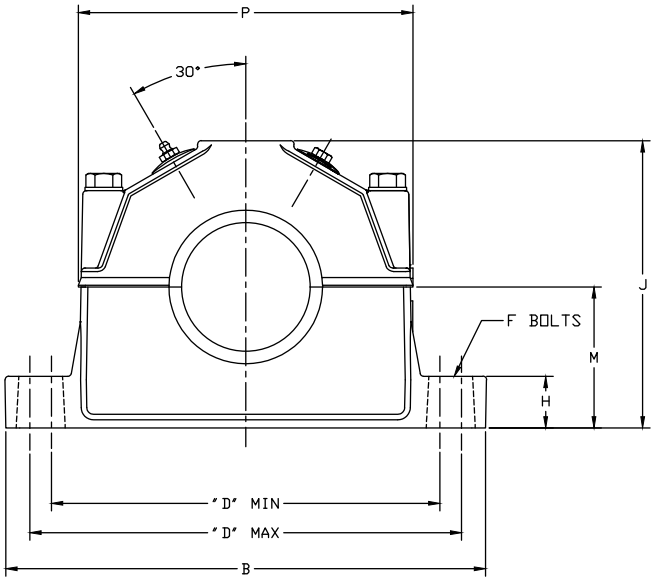

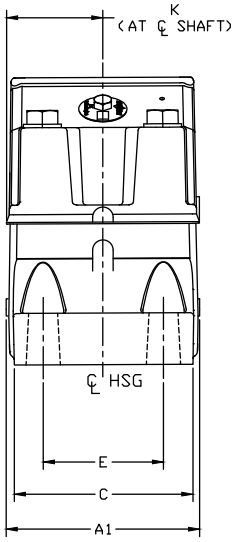

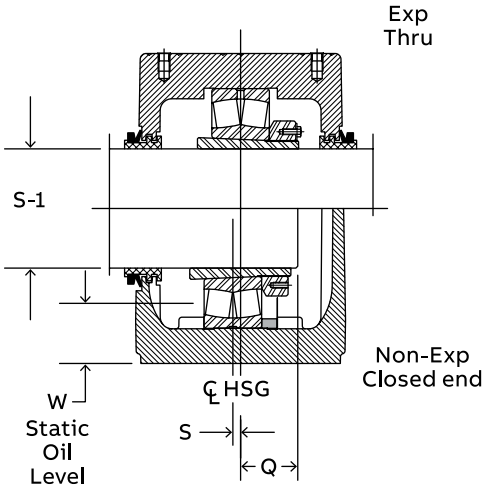

23000 Series
(Requires [1] Stabilizing Ring)

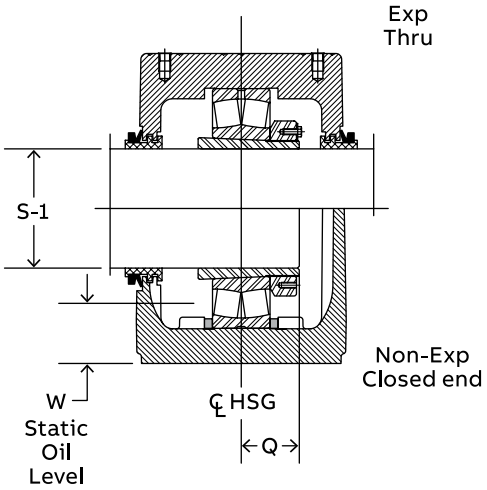

23100, 23200 Series
(Requires [2] Stabilizing Rings)

USDAF large-bore pillow block – inch

Adapter mount

S-1 Shaft size	Housing	Bearing number	A1 ▲	B	C	D		E	F Base bolt size (4 req'd)	H
						Min.	Max.			
10-15/16	60	23060K	16.36	38.25	14.75	31.63	34.63	9.00	1-5/8	3.38
11-7/16	64	23064K								
11-1/2										
11-15/16	064L									
12										
12-7/16	68	23068K	15.85	39.00	15.25	32.00	34.00	10.00	1-7/8	4.19
12-1/2										

S-1 Shaft size	Housing	Bearing number	J	K	M	P	Q ★	S ●	Total exp.
10-15/16	60	23060K	23.44	7.72	12.00	26.50	4.31	0.19	3/8
11-7/16	64	23064K					4.45	0.19	3/8
11-1/2									
11-15/16	064L								3/8
12									
12-7/16	68	23068K	24.00	7.47	12.00	26.38	4.81	0.19	3/8
12-1/2									

▲ Housing width with drain plugs.

★ Distance shaft should extend beyond housing centerline if pillow block ils closed end style.

● Non-expansion bearing offset from centerline. For expansion bearing S = O.

USDAF large-bore pillow block – inch

Adapter mount

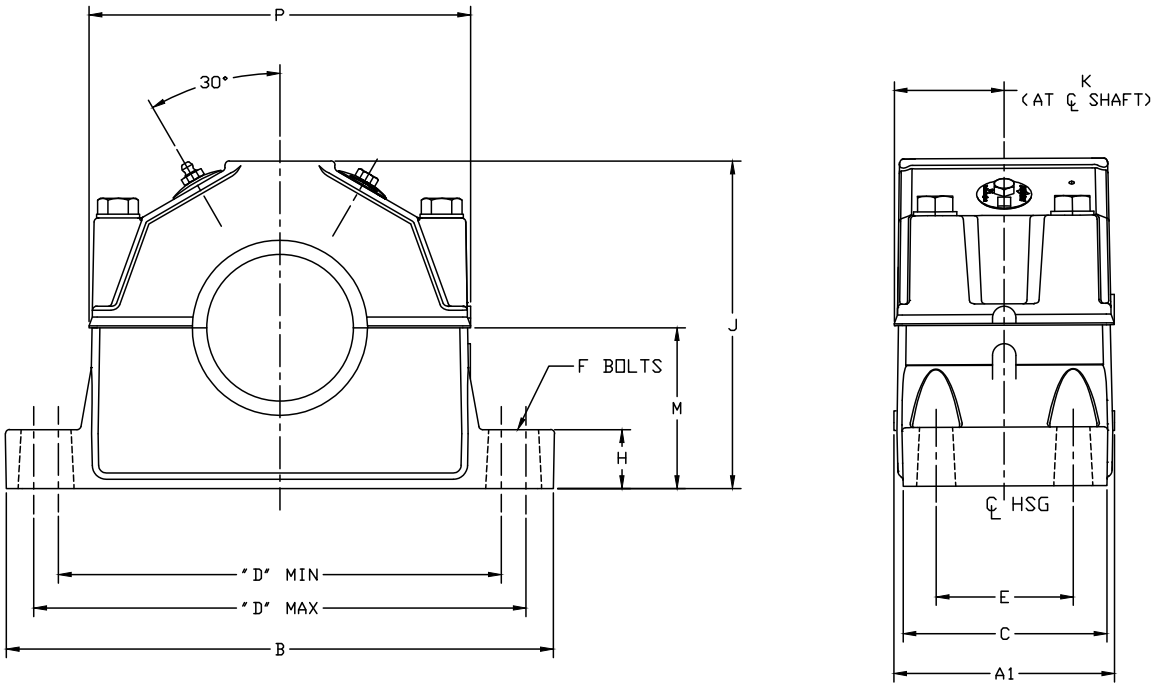

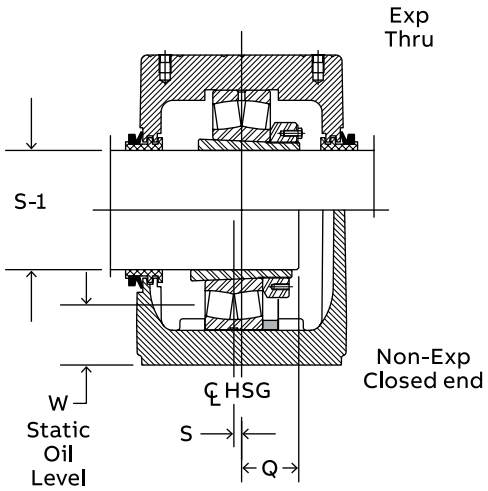

23000 Series
(Requires [1] Stabilizing Ring)

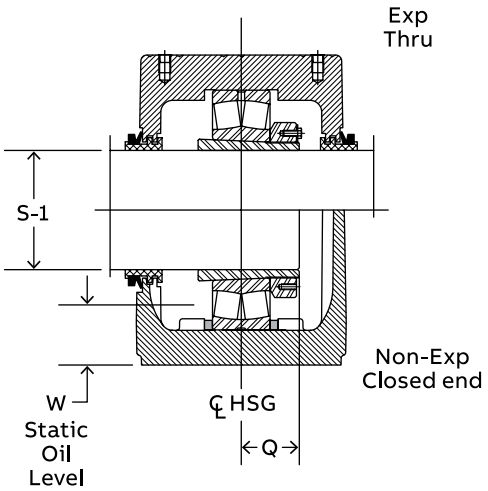

23100, 23200 Series
(Requires [2] Stabilizing Rings)

USDAF large-bore pillow block – inch

Adapter mount

S-1 Shaft size	Housing	Bearing number	A1 ▲	B	C	D		E	F Base bolt size (4 req'd)	H
						Min.	Max.			
12-15/16	072	23072K	16.98	41.75	15.75	35.00	36.50	10.25	1-7/8	4.50
13										
13-7/16	072L									
13-1/2										
13-15/16	076	23076K								
14										
15	080	23080K	18.38	46.00	17.13	39.25	40.75	11.00	2	5.25
15-3/4	084	23084K								

S-1 Shaft size	Housing	Bearing number	J	K	M	P	Q ★	S ●	Total exp.
12-15/16	072	23072K	25.75	8.16	12.81	29.13	4.81	0.19	3/8
13									
13-7/16	072L								3/8
13-1/2									
13-15/16	076	23076K					5.95	0.19	3/8
14									
15	080	23080K	29.00	8.75	14.50	33.17	5.36	0.19	3/8
15-3/4	084	23084K					5.39	0.19	3/8

▲ Housing width with drain plugs.

★ Distance shaft should extend beyond housing centerline if pillow block ils closed end style.

● Non-expansion bearing offset from centerline. For expansion bearing S = O.

USDAF large-bore pillow block – inch

Seals

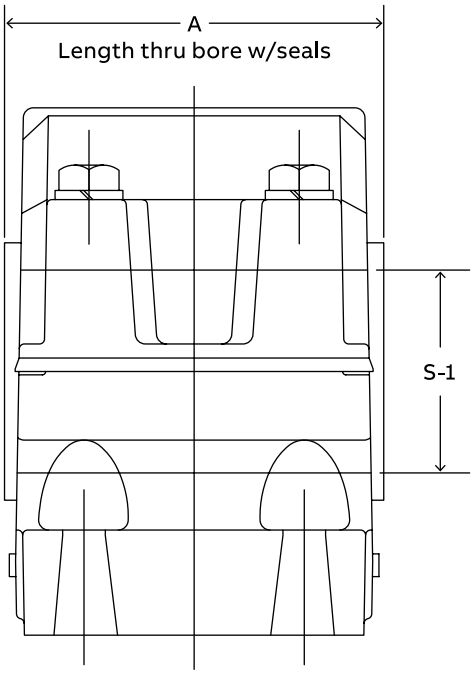

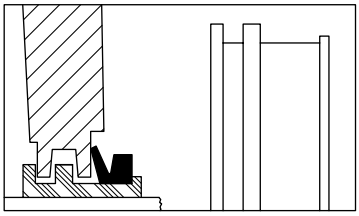

Triple-Tect seal
General purpose seal for wet or dirty environments

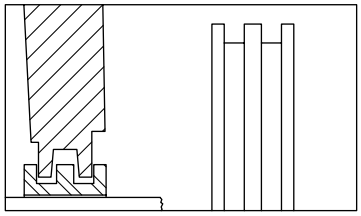

LER seal
High speed seal for relatively clean environments

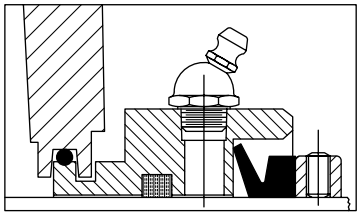

Auxiliary Taconite seal
For dusty environments and low to moderate speeds

USDAF large-bore pillow block – inch

Seals

S-1 Shaft size	Housing	Seal group	Part numbers			A		
			Triple-Tect (TT)	Metal Labyrinth (LER)	Auxiliary (AUX)	TT	ER	AUX*
10-15/16	060	96	047942	042037	045781	16.53	15.25	19.84
11			047943	422588	044440			19.59
11-7/16	064	98	047944	042038	045784			19.84
11-1/2			047945	042039	045787			
11-15/16	064L	100	047946	042040	045790			
2			047947	422535	045793			
12-7/16	068	102	047948	046498	046567	16.09	14.81	19.41
12-1/2			047949	046499	046568			
12-15/16	072	104	047950	042090	045796	17.44	16.23	20.52
13			047951	042091	045799			
13-7/16	072L	106	047952	042092	045802			
13-1/2			047953	042093	045805			
13-15/16	076	108	047954	042094	045808			20.77
14			047955	042095	046569			
15	080	110	047956	050474	046570	18.63	17.42	21.97
15-3/4	084	112	047957	046566	046572			22.23

* Includes collar.

USDAF large-bore pillow block – inch

23000, 23100, 23200 spherical roller bearings

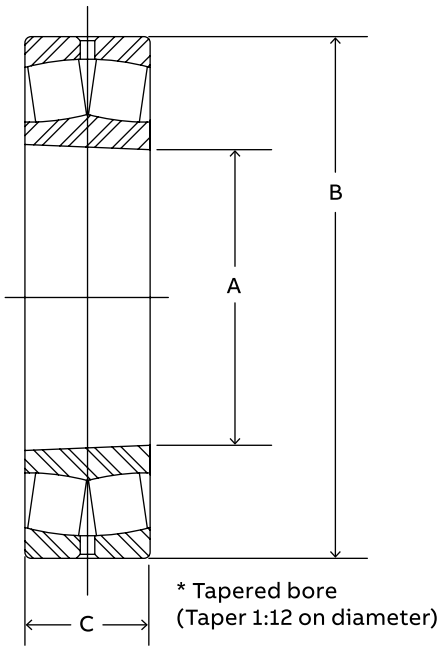

Housing	Bearing number	Part number	Approx. weight (lbs)	A* in (mm)	B in (mm)	C in (mm)
060	23060K	422582	150	11.8110(300)	18.1102(460)	4.6457(118)
064/064L	23064K	422531	161	12.5984(320)	18.8976(480)	4.7638(121)
068	23068K	421282	218	13.3858(340)	20.4724(520)	5.2362(133)
072/072L	23072K	422036	226	14.1732(360)	21.2598(540)	5.2756(134)
076	23076K	422054	240	14.9606(380)	22.0472(560)	5.3150(135)
080	23080K	421283	309	15.7480(400)	23.6220(600)	5.8268(148)
084	20384K	421284	330	16.5354(420)	24.4094(620)	5.9055(150)

USDAF large-bore pillow block – inch

Adapter assembly

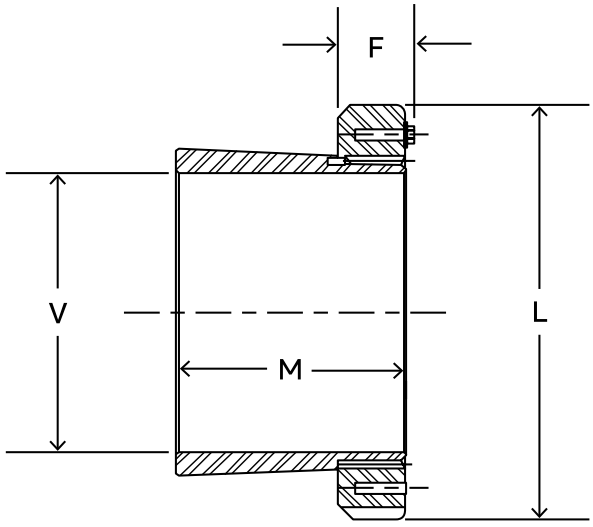

Housing	Bearing number	SNP number	Part number	Approx weight (lbs)	V Shaft size	L	F max	M
60	23060K	SNP3060-1015	043581	59.0	10-15/16	14.19	1.94	6.72
		SNP3060-1100	422576	56.8	11			
64	23064K	SNP3064-1107	043582	82.7	11-7/16	15.01	2.03	6.94
		SNP3064-1108	043583	80.5	11-1/2			
064L		SNP3064-1115	043584	65.0	11-15/16			
		SNP3064-1200	422525	62.5	12			
68	23068K	SNP3068-1207	047632	78.0	12-7/16	15.76	2.16	7.53
		SNP3068-1208	047635	75.4	12-1/2			
72	23072K	SNP3072-1215	043635	107.7	12-15/16			
		SNP3072-1300	043636	105.0	13			
072L		SNP3072-1307	043637	86.0	13-7/16	16.51	2.16	7.57
		SNP3072-1308	043638	83.2	13-1/2			
76	23076K	SNP3076-1315	043639	94.3	13-15/16	17.76	2.36	7.73
		SNP3076-1400	043640	91.5	14			
80	23080K	SNP3080-1500	040830	100.0	15	18.51	2.52	8.4
84	23084K	SNP3084-1512	047636	105.0	15-3/4	19.32	2.52	8.49

USAF 200 series pillow block – inch

2- and 4-bolt, direct mount

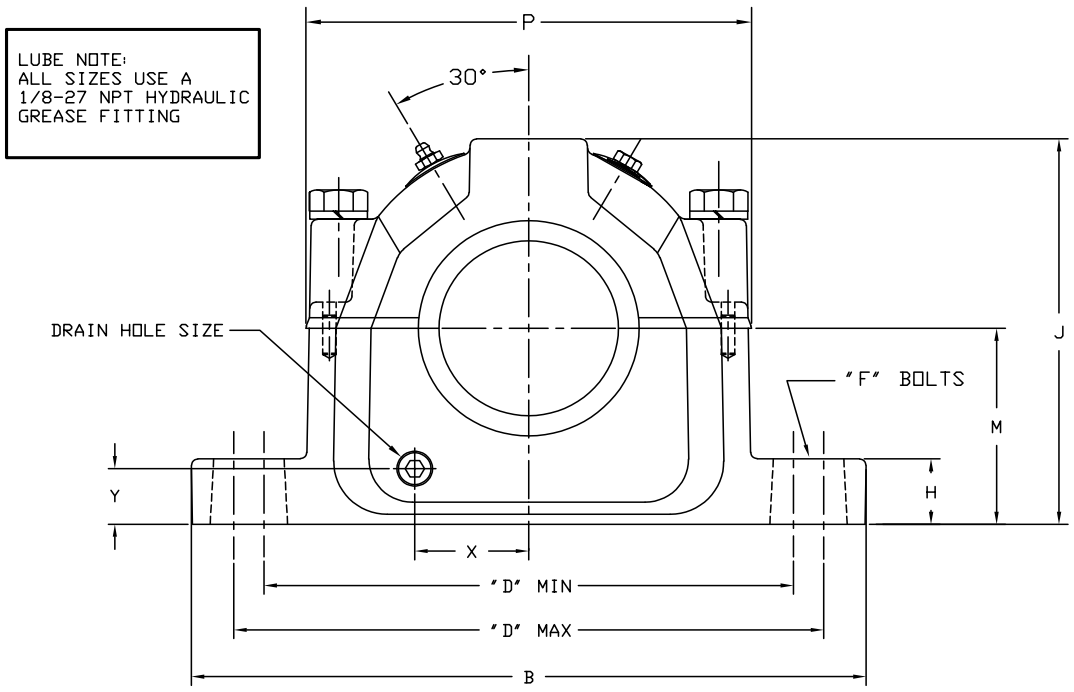

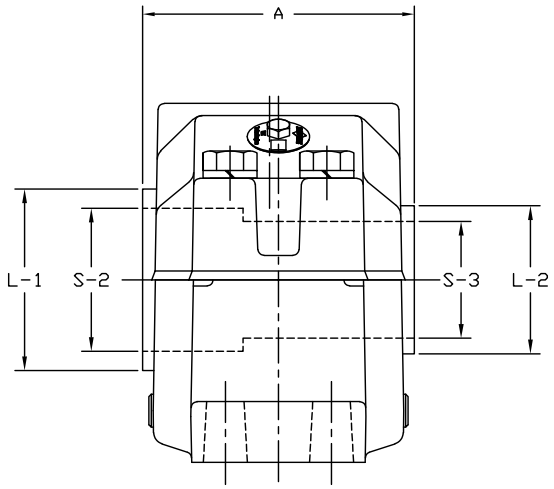

USAF 200 series pillow block – inch

2- and 4-bolt, direct mount

Shaft size		Bearing bore (mm)	Complete pillow block part number	Housing part number**	Bearing part number	Dynamic capacity (C) lbs	Max rpm (grease)	Lock nut part number
S-2	S-3							
3-7/16	2-13/16	75	P2B215-USAF-307TT	H2S-215-USAF	BRG22215C3	48,000	3,400	AN15
			039175	039682	421265			460901
			P4B215-USAF-307TT	H4S-215-USAF	BRG22215C3	48,000	3,400	AN15
			039177	039684	421265			460901
3-5/8	3	80	P2B216-USAF-310TT	H2S-216-USAF	BRG22216C3	56,000	3,200	AN16
			039179	039686	421266			460902
			P4B216-USAF-310TT	H4S-216-USAF	BRG22216C3	56,000	3,200	AN16
			039181	039688	421266			460902
3-15/16	3-3/16	85	P2B217-USAF-315TT	H2S-217-USAF	BRG22217C3	68,000	3,000	AN17
			039183	039690	421267			460903
			P4B217-USAF-315TT	H4S-217-USAF	BRG22217C3	68,000	3,000	AN17
			039185	039692	421267			460903
4-1/8	3-3/8	90	P2B218-USAF-402TT	H2S-218-USAF	BRG22218C3	78,000	2,600	AN18
			039187	039694	421268			460904
			P4B218-USAF-402TT	H4S-218-USAF	BRG22218C3	78,000	2,600	AN18
			039189	039696	421268			460904
4-1/2	3-13/16	100	P2B220-USAF-408TT	H2S-220-USAF	BRG22220C3	96,500	2,200	AN20
			039191	039698	421269			460905
			P4B220-USAF-408TT	H4S-220-USAF	BRG22220C3	96,500	2,200	AN20
			039193	039700	421269			460905
4-7/8	4-3/16	110	P4B222-USAF-414TT	H4S-222-USAF	BRG22222C3	122,000	2,000	AN22
			039195	039702	421270			460906
5-5/16	4-9/16	120	P4B224-USAF-505TT	H4S-224-USAF	BRG22224C3	143,000	1,900	AN24
			039197	039704	421271			041071
5-7/8	4-15/16	130	P4B226-USAF-514TT	H4S-226-USAF	BRG22226C3	170,000	1,800	AN26
			039199	039706	421272			041064
6-1/4	5-5/16	140	P4B228-USAF-604TT	H4S-228-USAF	BRG22228C3	196,000	1,700	AN28
			039201	039708	421273			041065
6-5/8	5-3/4	150	P4B230-USAF-610TT	H4S-230-USAF	BRG22230C3	228,000	1,600	AN30
			039203	039710	421274			041072
7	6-1/16	160	P4B232-USAF-700TT	H4S-232-USAF	BRG22232C3	260,000	1,500	AN32
			039205	039711	421275			041066
7-7/16	6-7/16	170	P4B234-USAF-707TT	H4S-234-USAF	BRG22234C3	308,000	1,300	AN34
			039207	039712	421276			041067
7-13/16	6-7/8	180	P4B236-USAF-713TT	H4S-236-USAF	BRG22236C3	308,000	1,300	AN36
			039209	039713	421277			041070
8-3/8	7-1/4	190	P4B238-USAF-806TT	H4S-238-USAF	BRG22238C3	270,000	1,200	AN38
			039211	039714	421278			041068
8-3/4	7-5/8	200	P4B240-USAF-812TT	H4S-240-USAF	BRG22240C3	300,000	900	AN40
			039213	039715	421279			040838
9-9/16	8-5/16	220	P4B244-USAF-909TT	H4S-244-USAF	BRG22244C3	365,000	950	AN44
			039215	039716	421280			041069

USAF 200 series pillow block – inch

2- and 4-bolt, direct mount

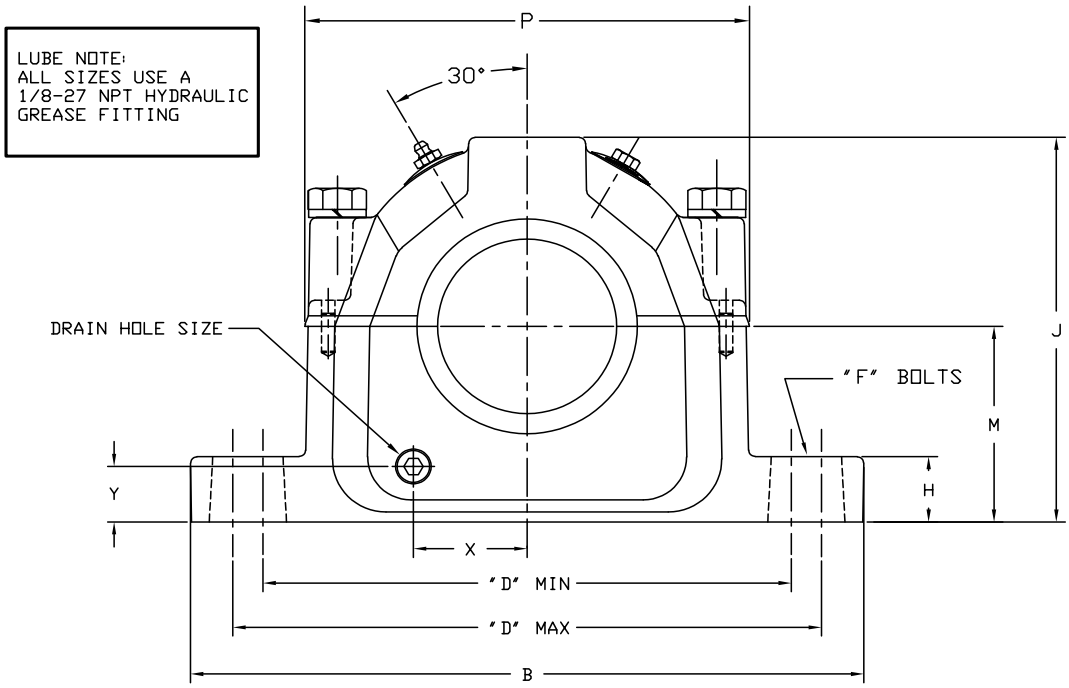

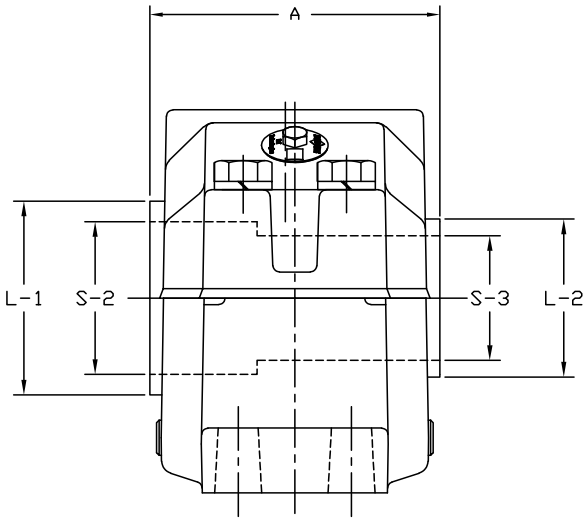

USAF 200 series pillow block – inch

2- and 4-bolt, direct mount

Shaft size		Bearing bore (mm)	Lock washer part number	Triple-Tect part number		TTDN part number		# LER part number		End cover part number
S-2	S-3			S2	S3	S2	S3	S2	S3	
3-7/16	2-13/16	75	W15	38TT307	24TT213	38TTDN307	24TTDN213	38LER307	24LER213	EC24
			419150	046401	046400	039568	039289	*045928	*045927	040705
			W15	38TT307	24TT213	38TTDN307	24TTDN213	38LER307	24LER213	EC24
			419150	046401	046400	039568	039289	045928	045927	040705
3-5/8	3	80	W16	38TT310	28TT300	38TTDN310	28TTDN300	38LER310	28LER300	EC28
			419152	046402	043547	039291	039857	045931	042519	040706
			W16	38TT310	28TT300	38TTDN310	28TTDN300	38LER310	28LER300	EC28
			419152	046402	043547	039291	039857	045931	042519	040706
3-15/16	3-3/16	85	W17	42TT315	32TT303	42TTDN315	32TTDN303	42LER315	32LER303	EC32
			419154	046404	046403	039515	039292	042089	042088	057260
			W17	42TT315	32TT303	42TTDN315	32TTDN303	42LER315	32LER303	EC32
			419154	046404	046403	039515	039292	042089	042088	057260
4-1/8	3-3/8	90	W18	44TT402	36TT306	—	—	44LER402	36LER306	—
			419156	046406	046405			*045936	*045934	
			W18	44TT402	36TT306	—	—	44LER402	36LER306	—
			419156	046406	046405			*045936	*045934	
4-1/2	3-13/16	100	W20	54TT408	50TT313	—	—	54LER408	50LER313	EC50
			419158	043555	046407			042527	045939	040709
			W20	54TT408	50TT313	—	—	54LER408	50LER313	EC50
			419158	043555	046407			042527	045939	040709
4-7/8	4-3/16	110	W22	56TT414	52TT403	56TTDN414	52TTDN403	56LER414	52LER403	EC52
			419160	046408	043553	039297	039863	042098	042525	040710
5-5/16	4-9/16	120	W24	58TT510	54TT409	—	—	58LER505	54LER409	EC54
			419162	046411	046409			042248	045943	040711
5-7/8	4-18/16	130	W26	62TT514	56TT415	—	—	62LER514	56LER415	EC56
			419164	046410	043556			042085	042528	040712
6-1/4	5-5/16	140	W28	66TT604	58TT505	—	—	66LER604	58LER505	EC58
			419166	046412	046411			042249	042248	040713
6-5/8	5-3/4	150	W30	70TT610	62TT512	—	—	70LER610	62LER512	—
			419168	046414	046413			045951	045949	
7	6-1/16	160	W32	72TT700	64TT601	—	—	72LER700	64LER601	EC64
			419170	043565	046415			042538	045953	040681
7-7/16	6-7/16	170	W34	76TT707	68TT607	—	—	76LER707	68LER607	EC68
			419172	046416	043562			042049	042535	040682
7-13/16	6-7/8	180	W36	78TT711	72TT614	—	—	78LER711	72LER614	EC72
			419174	046417	046418			042221	042220	040683
8-3/8	7-1/4	190	W38	80TT806	74TT704	—	—	*80LER806	*74LER704	EC74
			419176	046420	046419			042031	042032	040691
8-3/4	7-5/8	200	W40	82TT812	76TT710	—	—	*82LER812	*76LER710	EC7
			419171	046423	046422			045956	045955	040684
9-9/16	8-5/16	220	W44	84TT909	80TT805	—	—	*84LER909	*80LER805	—
			419178	046425	046424			042029	042028	

Note: LER seals are made from aluminum unless otherwise noted by the * symbol.

If an * appears by the part number, the LER seal is manufactured from steel.

USAF 200 series pillow block – inch

2- and 4-bolt, direct mount

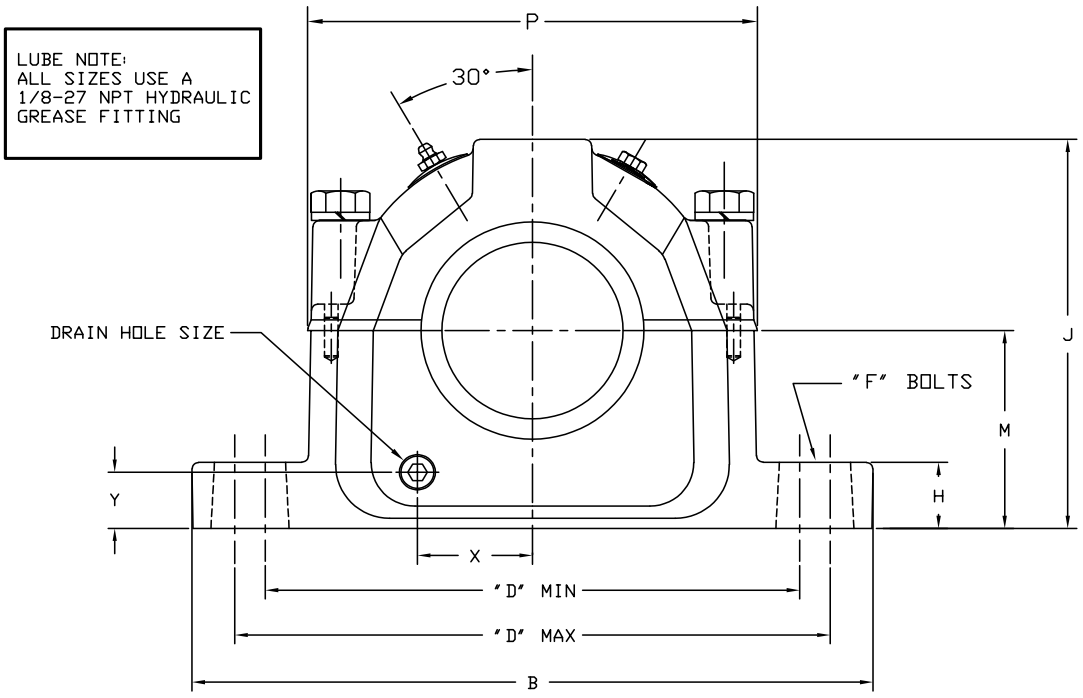

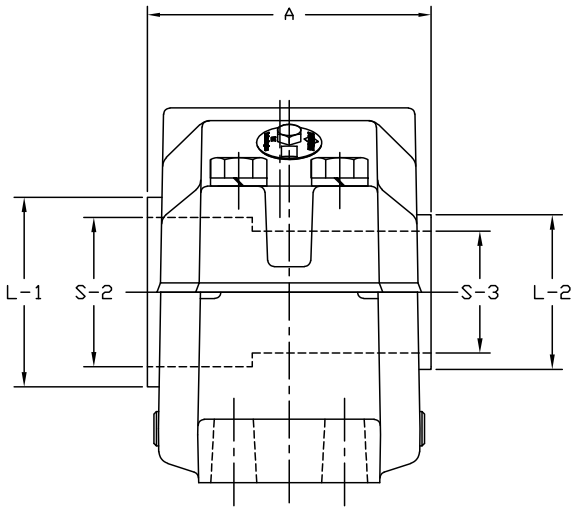

USAF 200 series pillow block – inch

2- and 4-bolt, direct mount

S-2 Shaft size	S-3 Shaft size	Housing	A1 ▲	B	C	D 2-bolt Min.	D 2-bolt Max.	D 4-bolt Min.	D 4-bolt Max.	E	F bolt dia. H	F bolt dia. J
3-7/16	2-13/16	215	5.20	11.13	3.13	8.63	9.68	8.63	9.63	1.88	5/8	1/2
3-5/8	3	216	5.44	12.59	3.50	9.63	11.00	9.68	11.00	2.13	3/4	5/8
3-15/16	3-3/16	217	5.39	12.59	3.50	9.88	11.00	9.88	11.00	2.13	3/4	5/8
4-1/8	3-3/8	218	6.16	13.63	3.88	10.25	11.75	10.38	11.63	2.13	3/4	5/8
4-1/2	3-13/16	220	6.78	15.36	4.34	11.63	13.13	11.63	13.13	2.38	7/8	3/4
4-7/8	4-3/16	222	7.08	16.50	4.75	—	—	12.59	14.50	2.75	—	3/4
5-5/16	4-9/16	224	8.05	16.50	4.72	—	—	13.25	14.50	2.75	—	3/4
5-7/8	4-15/16	226	8.27	18.58	5.13	—	—	14.50	16.00	3.25	—	7/8
6-1/4	5-5/16	228	8.77	19.69	5.88	—	—	15.63	17.38	3.38	—	1
6-5/8	5-3/4	230	9.36	20.88	6.25	—	—	16.75	18.25	3.75	—	1
7	6-1/16	232	9.92	21.66	6.25	—	—	17.38	19.25	3.75	—	1
7-7/16	6-7/16	234	9.91	24.75	6.75	—	—	19.38	21.63	4.25	—	1
7-13/16	6-7/8	236	10.41	26.75	7.13	—	—	20.88	23.63	4.63	—	1
8-3/8	7-1/4	238	10.81	28.00	7.50	—	—	21.63	24.88	4.50	—	1-1/4
8-3/4	7-5/8	240	11.53	28.75	8.00	—	—	22.50	25.00	5.00	—	1-1/4
9-9/16	8-5/16	244	12.30	32.75	8.88	—	—	24.75	27.88	5.25	—	1-1/2

S-2 Shaft size	S-3 Shaft size	Housing	H	J	K	M	P	Q ★	S ●	W Static oil level	X	Y	Drain hole size
3-7/16	2-13/16	215	1.25	6.44	2.31	3.25	7.06	1.39	0.13	1.16	1.78	0.88	1/4-18NPSF
3-5/8	3	216	1.06	6.75	2.42	3.50	7.94	1.44	0.19	1.25	1.97	0.95	1/4-18NPSF
3-15/16	3-3/16	217	1.25	7.38	2.47	3.75	8.19	1.50	0.19	1.38	1.13	1.06	3/8-18NPSF
4-1/8	3-3/8	218	1.44	7.75	2.84	4.00	8.66	1.72	0.19	1.47	1.25	1.13	3/8-18NPSF
4-1/2	3-13/16	220	1.66	8.75	3.16	4.50	9.78	1.92	0.19	1.64	2.63	1.25	3/8-18NPSF
4-7/8	4-3/16	222	1.78	9.41	3.30	4.94	10.59	2.09	0.19	1.80	2.88	1.34	3/8-18NPSF
5-5/16	4-9/16	224	1.50	10.25	3.64	5.25	11.25	2.28	0.19	1.84	3.19	1.38	1/2-14NPSF
5-7/8	4-15/16	226	2.06	11.53	3.75	6.00	12.41	2.47	0.19	1.34	3.31	1.63	1/2-14NPSF
6-1/4	5-5/16	228	2.06	11.81	4.00	6.00	13.25	2.45	0.19	2.03	3.63	1.47	1/2-14NPSF
6-5/8	5-3/4	230	2.38	12.50	4.33	6.31	14.31	2.61	0.19	2.03	3.59	1.33	1/2-14NPSF
7	6-1/16	232	2.34	13.31	4.63	6.69	14.91	2.91	0.19	2.09	4.03	1.33	1/2-14NPSF
7-7/16	6-7/16	234	2.88	14.56	4.63	7.06	16.81	3.13	0.19	2.19	4.16	1.33	1/2-14NPSF
7-13/16	6-7/8	236	3.00	15.13	4.88	7.50	17.19	3.16	0.19	2.42	4.22	1.63	1/2-14NPSF
8-3/8	7-1/4	238	3.13	15.81	5.06	7.88	18.00	3.30	0.19	2.53	4.75	1.61	1/2-14NPSF
8-3/4	7-5/8	240	3.38	16.63	5.44	8.25	19.00	3.50	0.19	2.47	4.91	1.53	1/2-14NPSF
9-9/16	8-5/16	244	3.75	18.88	5.81	9.50	21.25	3.42	0.19	3.25	5.44	2.03	1/2-14NPSF

▲ Housing width with drain plugs.

★ Distance shaft should extend beyond housing centerline if pillow block is closed end style.

● Non-expansion bearing offset from centerline. For expansion bearing S = 0.

USAF 200 series pillow block – inch

Seals

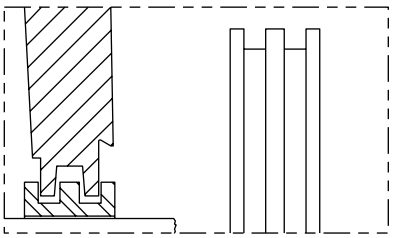

LER Seal
High speed seal for relatively clean environments

Length thru bore w/seals

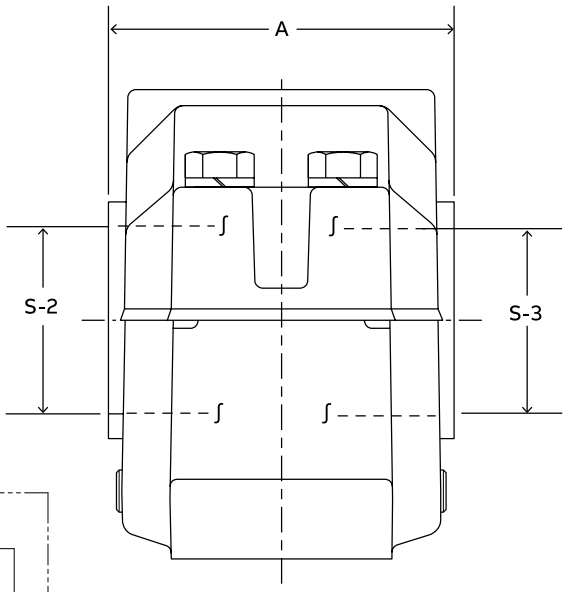

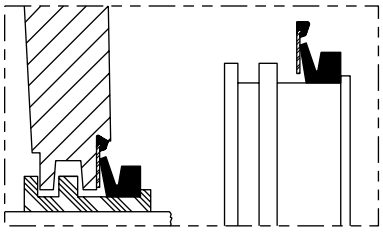

Drop-in Triple-Tect Seal
Dodge exclusive, popular Triple-Tect features with simplified installation.

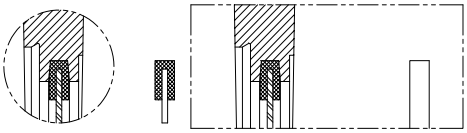

End Cover Seal
Allows use of open shaft housing as closed-end

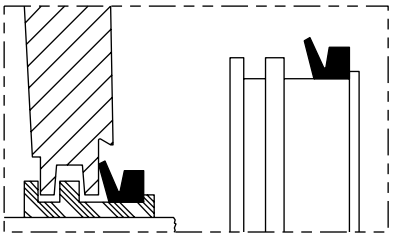

Triple-Tect Seal
General purpose seal for wet or dirty environments

S-2 Shaft size	S-3 Shaft size	Housing	Seal group		Part number							A		
					Triple-Tect (TT)		Triple-Tect Drop-in (TTDN)		# Metal Labyrinth (LER)		End cover part number	TT	TTDN	LER
			S-2	S-3	S-2	S-3	S-2	S-3	S-2	S-3	S-3			
3-7/16	2-13/16	215	33	24	046401	046400	039568	039289	045928	045927	040705	5.09	5.09	4.47
3-5/8	3	216	38	28	046402	043547	039291	039857	045931	042519	040706	5.33	5.33	4.72
3-15/16	3-3/16	217	42	32	046404	046403	039515	039292	042089	042088	—	5.44	5.44	4.83
4-1/8	3-3/8	218	44	36	046406	046405	—	—	045936	045934	—	6.27	6.27	5.70
4-1/2	3-13/16	220	54	50	043555	046407	—	—	042527	045939	040709	6.84	6.84	6.31
4-7/8	4-3/16	222	56	52	046408	043553	039297	039863	042098	042525	040710	7.19	7.19	6.59
5-5/16	4-9/16	224	58	54	046411	046409	—	—	042248	045943	040711	7.91	7.91	7.31
5-7/8	4-15/16	226	62	56	046410	043556	—	—	042085	042528	040712	8.14	8.14	7.50
6-1/4	5-5/16	228	66	58	046412	046411	—	—	042249	042248	040713	8.53	8.53	7.88
6-5/8	5-3/4	230	70	62	046414	046413	—	—	045951	045949	—	9.41	9.41	8.70
7	6-1/16	232	72	64	043565	046415	—	—	042538	045953	040681	9.91	9.91	9.20
7-7/16	6-7/16	234	76	68	046416	043562	—	—	042049	042535	040682	9.83	9.83	9.13
7-13/16	6-7/8	236	78	72	046417	046418	—	—	042221	042220	040683	10.41	10.41	9.69
8-3/8	7-1/4	238	80	74	046420	046419	—	—	042031	042032	—	11.00	11.00	9.98
8-3/4	7-5/8	240	82	76	046423	046422	—	—	045956	045955	040684	11.78	11.78	10.72
9-9/16	8-5/16	244	84	80	046425	046424	—	—	042029	042028	040687	12.30	12.30	11.41

Note: LER seals are made from aluminum unless otherwise noted by the * symbol.

If an * appears by the part number, the LER seal is manufactured from steel.

USAF 200 series pillow block – inch

22200 spherical roller bearings

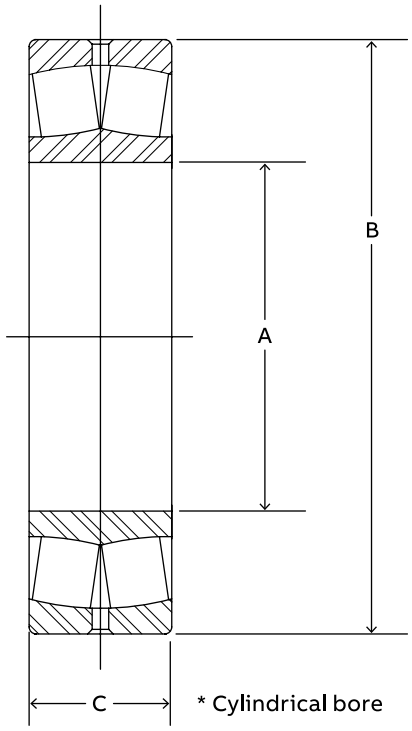

Bearing bore (mm)	Housing	Bearing number	Part number	Approx. weight (lbs)	A in (mm)	B in (mm)	C in (mm)
75	215	22215	421265	3.6	2.9528 (75)	5.1181 (130)	1.2205 (31)
80	216	22216	421266	4.4	3.1496 (80)	5.5118 (140)	1.2992 (33)
85	217	22217	421267	5.5	3.3465 (85)	5.9055 (150)	1.4173 (36)
90	218	22218	421268	7.1	3.5433 (90)	6.2992 (160)	1.5748 (40)
100	220	22220	421269	10.4	3.9370 (100)	7.0866 (180)	1.8110 (46)
110	222	22222	421270	14.8	4.3307 (110)	7.8740 (200)	2.0866 (53)
120	224	22224	421271	18.7	4.7244 (120)	8.4646 (215)	2.2835 (58)
130	226	22226	421272	23.1	5.1181 (130)	9.0551 (230)	2.5197 (64)
140	228	22228	421273	29.8	5.5118 (140)	9.8425 (250)	2.6772 (68)
150	230	22230	421274	35.5	5.9055 (150)	10.6299 (270)	2.8740 (73)
160	232	22232	421275	47.8	6.2992 (160)	11.4173 (290)	3.1496 (80)
170	234	22234	421276	58.0	6.6929 (170)	12.2047 (310)	3.3858 (86)
180	236	22236	421277	60.8	7.0866 (180)	12.5984 (320)	3.3858 (86)
190	238	22238	421278	82.2	7.4803 (190)	13.3858 (340)	3.6220 (92)
200	240	22240	421279	97.9	7.8740 (200)	14.1732 (360)	3.8583 (98)
220	244	22244	421280	135.0	8.6614 (220)	15.7480 (400)	4.2520 (108)

USAF 200 series pillow block – inch

Shaft details

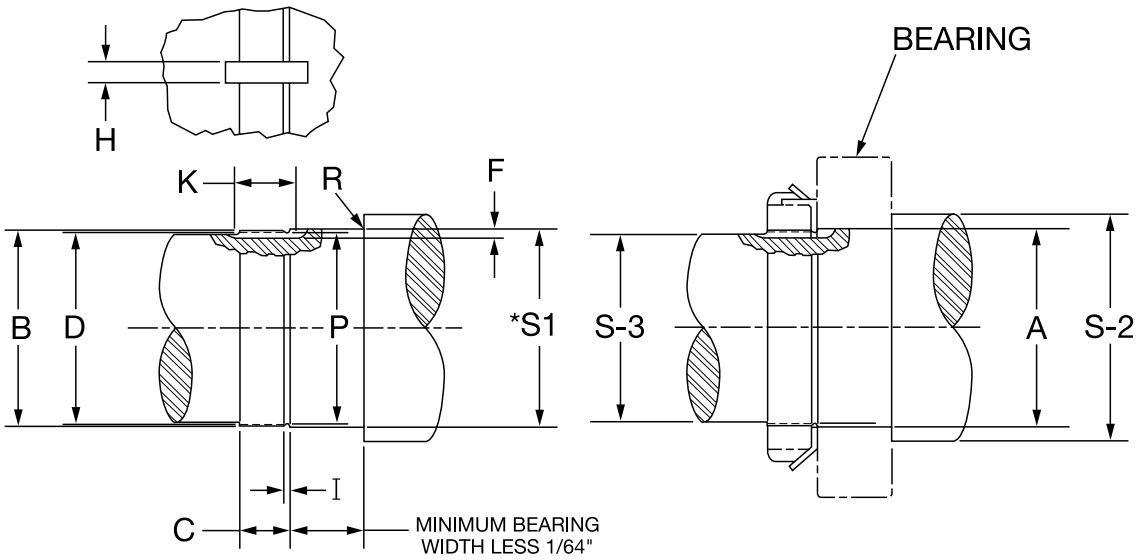

Nominal bearing bore diameter (mm)	Shaft bearing seat diameters (in)					
	Normal load			High load		
	* S-I		Mean fit	* S-I		Mean fit
	Max.	Min.		Max.	Min.	
75	2.9540	2.9532	.0011T	2.9543	2.9536	.0014T
80	3.1508	3.1501	.0012T	3.1511	3.1504	.0015T
85	3.3479	3.3470		3.3484	3.3475	
90	3.5447	3.5438		3.5452	3.5443	
95	3.7416	3.7407		3.7421	3.7412	
100	3.9384	3.9375	.0014T	3.9389	3.9380	.0019T
105	4.1353	4.1344		4.1358	4.1349	
110	4.3321	4.3312		4.33Z6	4.3317	
120	4.7258	4.7249		4.7263	4.7254	
125	4.9229	4.9219		4.9235	4.9225	
130	5.1197	5.1187		5.1203	5.1193	
140	5.5134	5.5124		5.5140	5.5130	
150	5.9071	5.9061	.0016T	5.9077	5.9067	.0022T
160	6.3008	6.2998		6.3014	6.3004	
170	6.6945	6.6935		6.6951	6.6941	
180	7.0882	7.0872		7.0888	7.0878	
190	7.4821	7.4809		7.4829	7.4817	.0026T
200	7.8758	7.8746	.0019T	7.8772	7.8760	.0032T
220	8.6632	8.6620		8.6646	8.6634	

Normal load

P/C = 0.10 to 0.18

High load

P/C > 0.18

Where: P = Equivalent dynamic load on the bearing (lbs)

C = Basic dynamic load rating of bearing (lbs)

USAF 200 series pillow block – inch

Shaft details

Housing	Lock nut and washer kit part number	A Bearing bore	S-2	S-3	Keyway			R Max radius
					F Depth +1/64 -Ø	H Width +1/64 -Ø	K Full depth length	
215	046756	2.9528 (75 mm)	3-7/16	2-13/16	1/8	5/16	15/16	0.059
216	046757	3.1496 (80 mm)	3-5/8	3	1/8	3/8	15/16	0.079
217	046758	3.3465 (85 mm)	3-15/16	3-3/16	1/8	3/8	31/32	0.079
218	046759	3.5433 (90 mm)	4-1/8	3-3/8	5/32	3/8	1-1/16	0.079
220	046760	3.9370 (100 mm)	4-1/2	3-13/16	5/32	3/8	1-3/16	0.079
222	046761	4.3307 (110 mm)	4-7/8	4-3/16	3/16	3/8	1-7/32	0.079
224	046762	4.7244 (120 mm)	5-5/16	4-9/16	3/16	3/8	1-1/4	0.079
226	046763	5.1181 (130 mm)	5-7/8	4-15/16	3/16	1/2	1-5/16	0.098
228	046764	5.5118 (140 mm)	6-1/4	5-5/16	3/16	5/8	1-3/8	0.098
230	046765	5.9055 (150 mm)	6-5/8	5-3/4	7/32	5/8	1-1/2	0.098
232	046766	6.2992 (160 mm)	7	6-1/16	15/64	5/8	1-9/16	0.098
234	046767	6.6929 (170 mm)	7-7/16	6-7/16	15/64	3/4	1-19/32	0.118
236	046768	7.0866 (180 mm)	7-13/16	6-7/8	15/64	3/4	1-5/8	0.118
238	046769	7.4803 (190 mm)	8-3/8	7-1/4	15/64	3/4	1-21/32	0.118
240	046770	7.8740 (200 mm)	8-3/4	7-5/8	15/64	7/8	1-23/32	0.118
244	046771	8.6614 (220 mm)	9-9/16	8-5/16	3/8	1-1/16	1-9/16	0.118

Housing	Threads per (in)	B Thread major diameter		D Thread pitch diameter		C Thread length +1/64 -Ø	I Thread relief +1/64 -Ø	P† Thread relief diameter
		Max.	Min.	Max.	Min.			
215	12	2.9330	2.9218	2.8789	2.8735	11/16	5/32	2.7995
216	12	3.1370	3.1258	3.0829	3.0770	11/16	5/32	3.0035
217	12	3.3400	3.3288	3.2859	3.2800	23/32	5/32	3.2065
218	12	3.5270	3.5158	3.4729	3.4655	13/16	5/32	3.3935
220	12	3.9180	3.9068	3.8639	3.8565	7/8	5/32	3.7845
222	12	4.325	4.3138	4.2709	4.2626	29/32	5/32	4.1915
224	12	4.716	4.7048	4.6619	4.6536	15/16	5/32	4.5825
226	12	5.106	5.0948	5.0519	5.0436	1	5/32	4.9725
228	12	5.497	5.4858	5.4429	5.4346	1-1/16	5/32	5.3635
230	12	5.888	5.8768	5.8339	5.8256	1-1/8	5/32	5.7545
232	8	6.284	6.2688	6.2028	6.1937	1-3/16	1/4	6.0993
234	8	6.659	6.6438	6.5778	6.5687	1-7/32	1/4	6.4743
236	8	7.066	7.0508	6.9848	6.9757	1-1/4	1/4	6.8813
238	8	7.472	7.4568	7.3908	7.3817	1-9/32	1/4	7.2873
240	8	7.847	7.8318	7.7658	7.7544	1-11/32	1/4	7.6623
244	8	8.628	8.6128	8.5468	8.5347	1-3/8	1/4	8.4433

† Tolerance +/-.005 through 2.6672 dia.; +/-.010 for larger sizes.

USAF 200 series pillow block – inch

Lock nut and washer

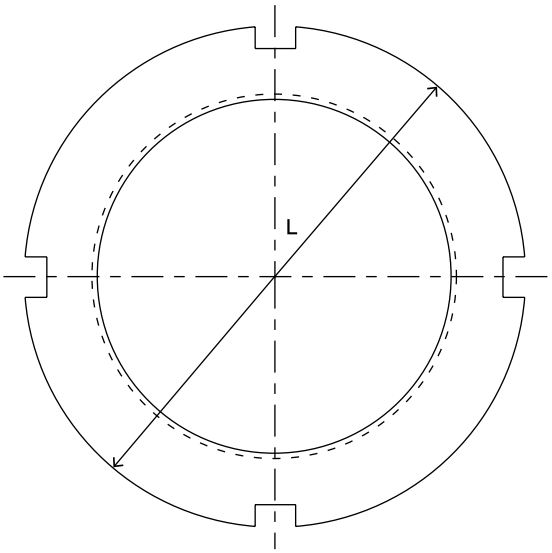

Locknut

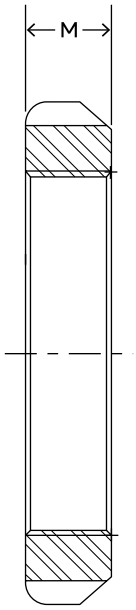

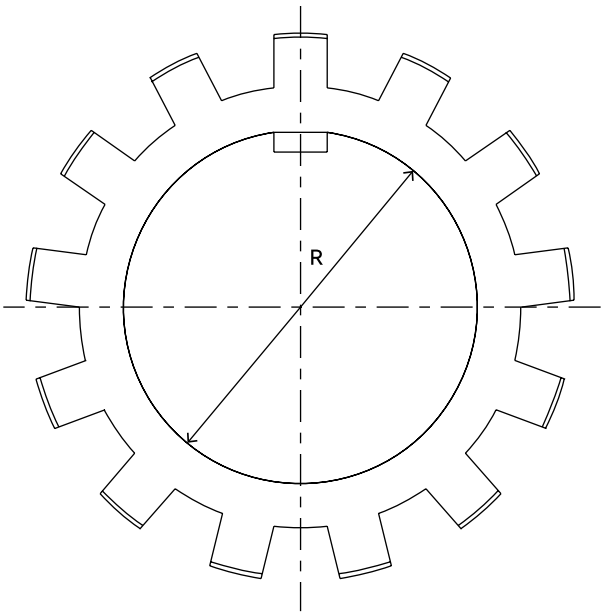

Lockwasher

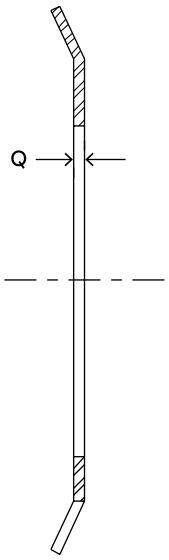

USAF 200 series pillow block – inch

Lock nut and washer

Housing	Lock nut		Lock washer		L	M	R	Q
	Description	Part number	Description	Part number				
215	AN15	460901	W15	419150	3.88	0.59	2.988	0.072
216	AN16	460902	W16	419152	4.16	0.59	3.192	0.072
217	AN17	460903	W17	419154	4.41	0.62	3.410	0.072
218	AN18	460904	W18	419156	4.66	0.69	3.597	0.094
220	AN20	460905	W20	419158	5.19	0.75	4.003	0.094
222	AN22	460906	W22	419160	5.72	0.78	4.410	0.125
224	AN24	041071	W24	419162	6.12	0.81	4.816	0.125
226	AN26	041064	W26	419164	6.75	0.88	5.209	0.125
228	AN28	041065	W28	419166	7.09	0.94	5.600	0.125
230	AN30	041072	W30	419168	7.69	0.97	6.001	0.156
232	AN32	041066	W32	419170	8.06	1.03	6.407	0.156
234	AN34	041067	W34	419172	8.66	1.06	6.782	0.156
236	AN36	041070	W36	419174	9.06	1.09	7.189	0.156
238	AN38	041068	W38	419176	9.47	1.12	7.595	0.156
240	AN40	040838	W40	419171	9.84	1.19	8.000	0.156
244	N44	041069	W44	419178	11.00	1.25	8.719	0.156

USAF 300 series pillow block – inch

2- and 4-bolt, direct mount

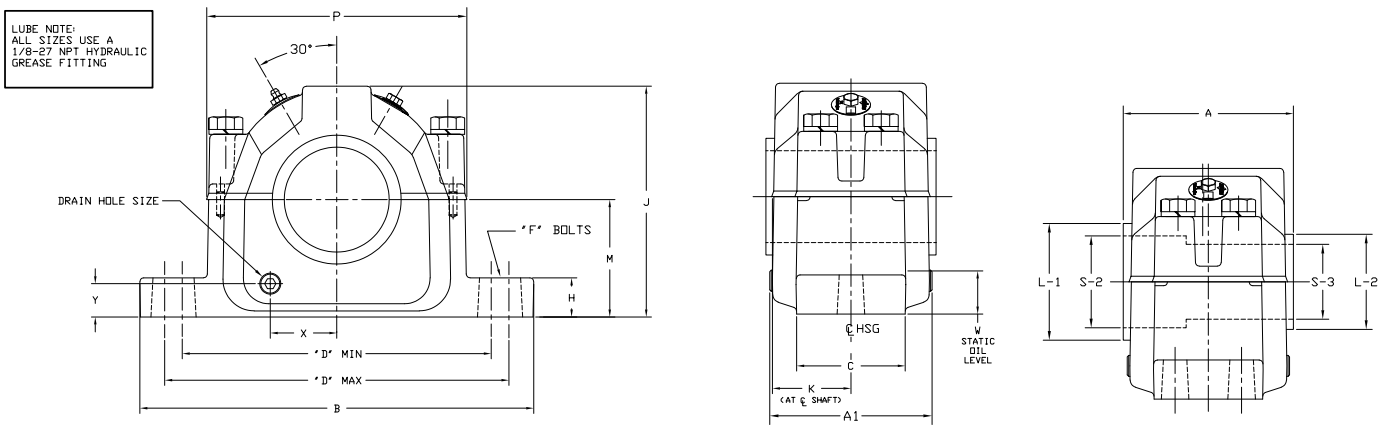

Shaft size		Bearing bore (mm)	Complete pillow block part number	Housing part number	Bearing part number	Dynamic capacity (C) lbs	Max rpm (grease)	Shaft Lock nut part number
S-2	S-3							
1-15/16	1-7/16	40	P2B308-USAF-115TT	H2S-308-USAF	BRG22308C3	35,500	4,300	N08
			039355	039717	423124			407305
2-1/8	1-11/16	45	P2B309-USAF-202TT	H2S-309-USAF	BRG22309C3	42,500	3,800	N09
			039356	039719	423125			419187
2-3/8	1-7/8	50	P2B310-USAF-206TT	H2S-310-USAF	BRG22310C3	51,000	3,400	N10
			035915	035437	423143			419188
2-9/16	2-1/16	55	P2B311-USAF-209TT	H2S-311-USAF	BRG22311C3	60,000	3,200	N11
			039357	039721	423126			419184
			P4B311-USAF-209TT	H4S-311-USAF	BRG22311C3	60,000	3,200	N11
			039371	039723	423126			419184
2-7/8	2-1/4	60	P2B312-USAF-214TT	H2S-312-USAF	BRG22312C3	69,500	2,800	N12
			039358	039725	423127			407302
			P4B312-USAF-214TT	H4S-312-USAF	BRG22312C3	69,500	2,800	N12
			039372	039727	423127			407302
3-1/6	2-7/16	65	P2B313-USAF-301TT	H2S-313-USAF	BRG22313C3	78,000	2,600	N13
			039359	039729	423128			419185
			P4B313-USAF-301TT	H4S-313-USAF	BRG22313C3	78,000	2,600	N13
			039373	039731	423128			419185
3-1/4	2-5/8	70	P2B314-USAF-304TT	H2S-314-USAF	BRG22314C3	86,500	2,400	N14
			039360	039733	423129			407036
			P4B314-USAF-304TT	H4S-314-USAF	BRG22314C3	86,500	2,400	N14
			039374	039735	423129			407036
3-7/16	2-13/16	75	P2B315-USAF-307TT	H2S-315-USAF	BRG22315C3	100,000	2,200	AN15
			039361	039737	423130			460901
			P4B315-USAF-307TT	H4S-315-USAF	BRG22315C3	100,000	2,200	AN15
			039375	039739	423130			460901
3-5/8	3	80	P2B316-USAF-310TT	H2S-316-USAF	BRG22316C3	112,000	2,200	AN16
			035916	035438	423144			460902
			P4B316-USAF-310TT	H4S-316-USAF	BRG22316C3	112,000	2,200	AN16
			035917	035439	423144			460902
3-15/16	3-3/16	85	P2B317-USAF-315TT	H2S-317-USAF	BRG22317C3	122,000	2,000	AN17
			039362	039741	423131			460903
			P4B317-USAF-315TT	H4S-317-USAF	BRG22317C3	122,000	2,000	AN17
			039376	039743	423131			460903

USAF 300 series pillow block – inch

2- and 4-bolt, direct mount

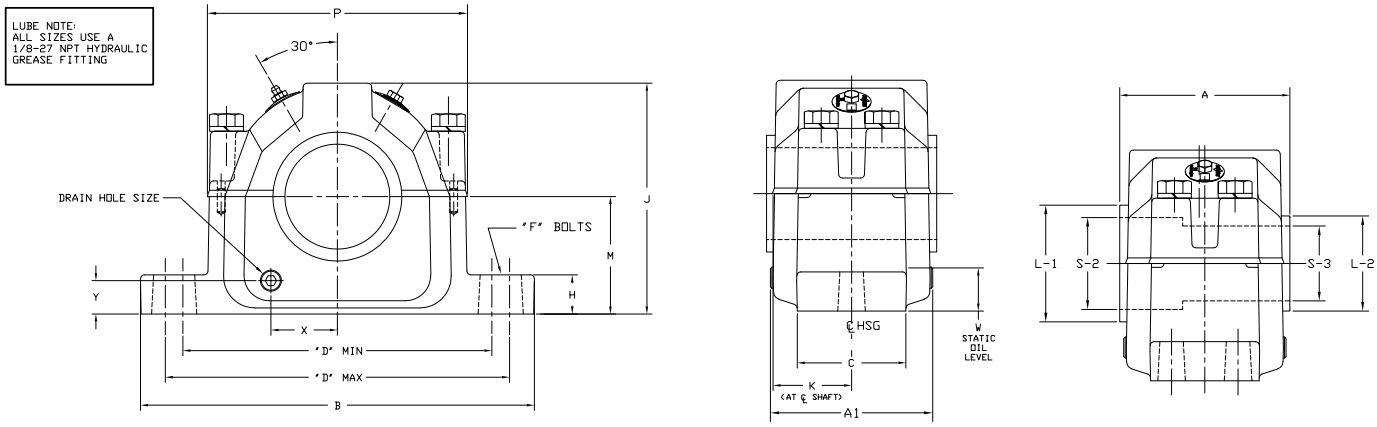

Shaft size		Bearing bore (mm)	Lock washer part number	Triple-Tect part number		TTDN part number		# LER part number		End cover part number
S-2	S-3			S-2	S-3	S2	S3	S-2	S-3	
1-15/16	1-7/16	40	W08	12TT115	08TT107	—	—	12LER115	08LER107	EC-08
			419151	043540	043578			042512	042193	040700
2-1/8	1-11/16	45	W09	14TT202	10TT111	—	—	14LER202	10LER111	EC-10
			419180	046464	043579			046472	042199	040701
2-3/8	1-7/8	50	W10	18TT206	12TT114	—	—	18LER206	12LER114	EC-12
			419181	046166	046167			046175	046176	040702
2-9/16	2-1/16	55	W11	22TT209	14TT201	22TTDN209	14TTDN201	22LER209	14LER201	EC-14
			419182	046466	046463	035748	035745	046474	046471	040703
			W11	22TT209	14TT201	22TTDN209	14TTDN201	22LER209	14LER201	EC-14
			419182	046466	046463	035748	035745	046474	046471	040703
2-7/8	2-1/4	60	W12	26TT214	14TT204	26TTDN214	14TTDN204	26LER214	14LER204	EC-14
			419008	046468	046465	035750	035747	046476	046473	040703
			W12	26TT214	14TT204	26TTDN214	14TTDN204	26LER214	14LER204	EC-14
			419008	046468	046465	035750	035747	046476	046473	040703
3-1/6	2-7/16	65	W13	28TT301	22TT207	28TTDN301	22TTDN207	28LER301	22LER207	—
			419183	046469	046168	035751	035744	046477	046177	
			W13	28TT301	22TT207	28TTDN301	22TTDN207	28LER301	22LER207	—
			419183	046469	046168	035751	035744	046477	046177	
3-1/4	2-5/8	70	W14	32TT304	22TT210	32TTDN304	22TTDN210	32LER304	22LER210	—
			419153	046470	046467	035752	035749	046478	046475	
			W14	32TT304	22TT210	32TTDN304	22TTDN210	32LER304	22LER210	—
			419153	046470	046467	035752	035749	046478	046475	
3-7/16	2-13/16	75	W15	38TT307	24TT213	38TTDN307	24TTDN213	38LER307	24LER213	EC24
			419150	046401	046400	039568	039289	045928	045927	040705
			W15	38TT307	24TT213	38TTDN307	24TTDN213	38LER307	24LER213	EC24
			419150	046401	046400	039568	039289	045928	045927	040705
3-5/8	3	80	W16	38TT310	28TT300	38TTDN310	28TTDN300	38LER310	28LER300	EC28
			419152	046402	042547	039291	039857	045931	042519	040706
			W16	38TT310	28TT300	38TTDN310	28TTDN300	38LER310	28LER300	EC28
			419152	046402	042547	039291	039857	045931	042519	040706
3-15/16	3-3/16	85	W17	42TT315	32TT303	42TTDN315	32TTDN303	42LER315	32LER303	—
			419154	046404	046403	039515	039292	042089	042088	
			W17	42TT315	32TT303	42TTDN315	32TTDN303	42LER315	32LER303	—
			419154	046404	046403	039515	039292	042089	042088	

Note: LER seals are made from aluminum unless otherwise noted by the * symbol.

If an * appears by the part number, the LER seal is manufactured from steel.

USAF 300 series pillow block – inch

2- and 4-bolt, direct mount

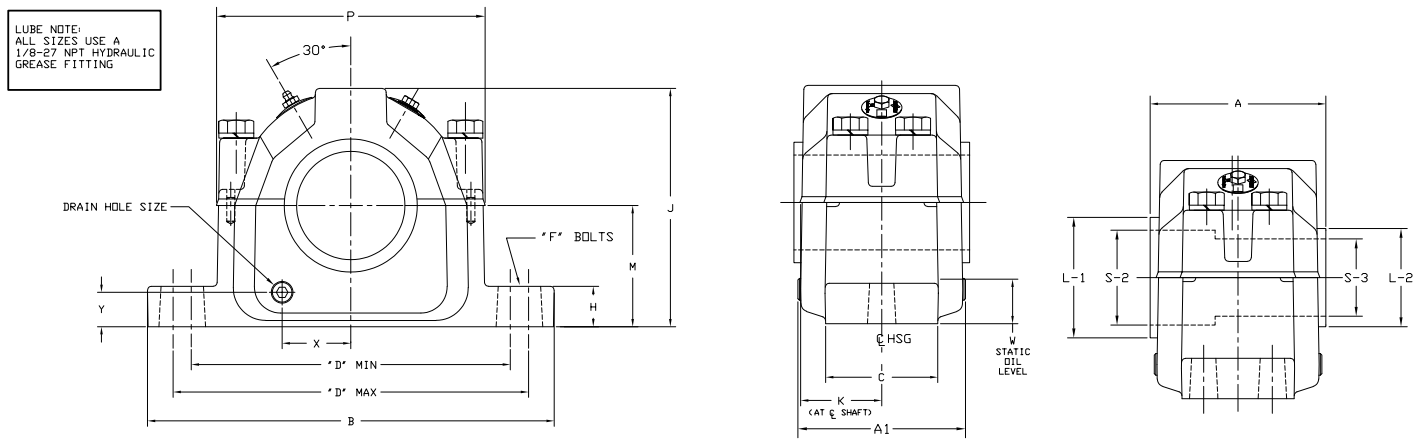

Shaft size		Bearing bore (mm)	Complete pillow block part number	Housing part number**	Bearing part number	Dynamic capacity (C) lbs	Max rpm (grease)	Lock nut part number
S-2	S-3							
4-1/2	3-13/16	100	P4B320-USAF-408TT 039377	H4S-320-USAF 039745	BRG22320C3 423132	146,000	1,700	AN204 060905
4-7/8	4-3/16	110	P4B322-USAF-414TT 039378	H4S-322-USAF 039747	BRG22322C3 423133	180,000	1,500	AN224 060906
5-5/16	4-9/16	120	P4B324-USAF-505TT 039380	H4S-324-USAF 039749	BRG22324C3 423134	204,000	1,400	AN24 041071
5-7/8	4-15/16	130	P4B326-USAF-514TT 039381	H4S-326-USAF 039750	BRG22326C3 423135	236,000	1,300	AN26 041064
6-1/4	5-5/16	140	P4B328-USAF-604TT 039382	H4S-328-USAF 039751	BRG22328C3 423136	275,000	1,200	AN28 041065
6-5/8	5-3/4	150	P4B330-USAF-610TT 039383	H4S-330-USAF 039752	BRG22330C3 423137	310,000	1,100	AN30 041072
7	6-1/16	160	P4B332-USAF-700TT 039384	H4S-332-USAF 039753	BRG22332C3 423138	325,000	1,000	AN32 041066
7-7/16	6-7/16	170	P4B334-USAF-707TT 039385	H4S-334-USAF 039754	BRG22334C3 423139	360,000	950	AN34 041067
8-3/8	7-1/4	190	P4B338-USAF-806TT 039386	H4S-338-USAF 039755	BRG22338C3 423140	415,000	850	AN38 041068

USAF 300 series pillow block – inch

2- and 4-bolt, direct mount

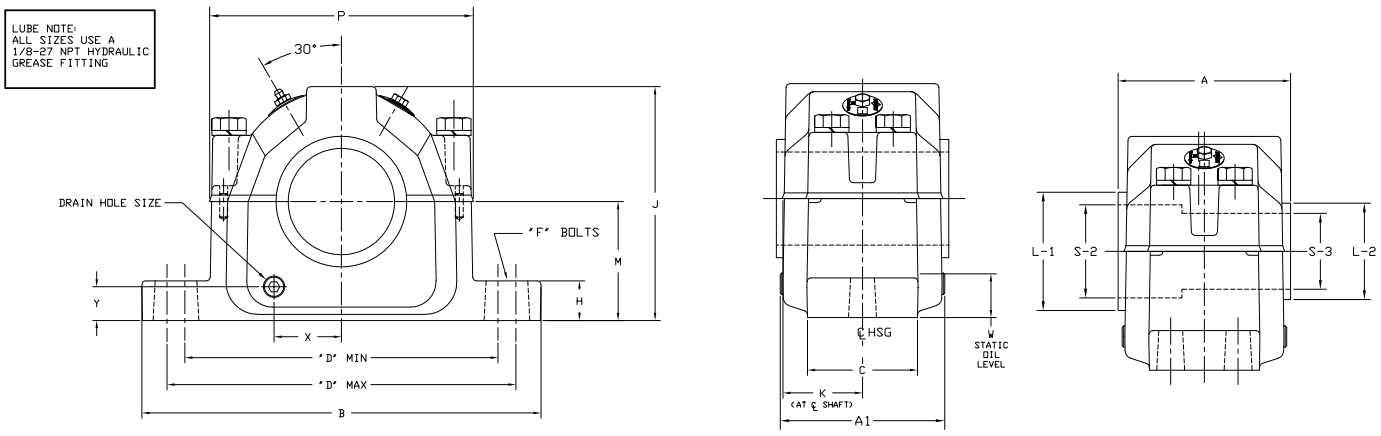

Shaft size		Bearing bore (mm)	Lock washer part number	Triple-Tect part number		TTDN part number		# LER part number		End cover part number
S2	S3			S-2	S-3	S-2	S-3	S2	S3	
4-1/2	3-13/16	100	W20	54TT408	50TT313	—	—	54LER408	50LER313	EC50
			419158	043555	046407			042527	045939	040709
4-7/8	4-3/16	110	W22	56TT414	52TT403	56TTDN414	52TTDN403	56LER414	52LER403	EC52
			419160	046408	043553	039297	039863	042098	042525	040710
5-5/16	4-9/16	120	W24	58TT510	54TT409	—	—	58LER505	54LER409	EC54
			419162	046411	046409			042248	045943	040711
5-7/8	4-15/16	130	W26	62TT514	56TT415	—	—	62LER514	56LER415	EC56
			419164	046410	043556			042085	042528	040712
6-1/4	5-5/16	140	W28	66TT604	58TT505	—	—	66LER604	58LER505	EC58
			419166	046412	046411			042249	042248	040713
6-5/8	5-3/4	150	W30	70TT610	62TT512	—	—	70LER610	62LER512	—
			419168	046414	046413			045951	045949	
7	6-1/16	160	W32	72TT700	64TT601	—	—	72LER700	64LER601	EC64
			419170	043565	046415			042538	045953	040681
7-7/16	6-7/16	170	W34	76TT707	68TT607	—	—	76LER707	68LER607	EC68
			419172	046416	043562			042049	042535	040682
8-3/8	7-1/4	190	W38	80TT806	74TT704	—	—	80LER806	74LER704	EC74
			419176	046420	046419			042031	042032	040691

Note: LER seals are made from aluminum unless otherwise noted by the * symbol.

If an * appears by the part number, the LER seal is manufactured from steel.

USAF 300 series pillow block – inch

2- and 4-bolt, direct mount

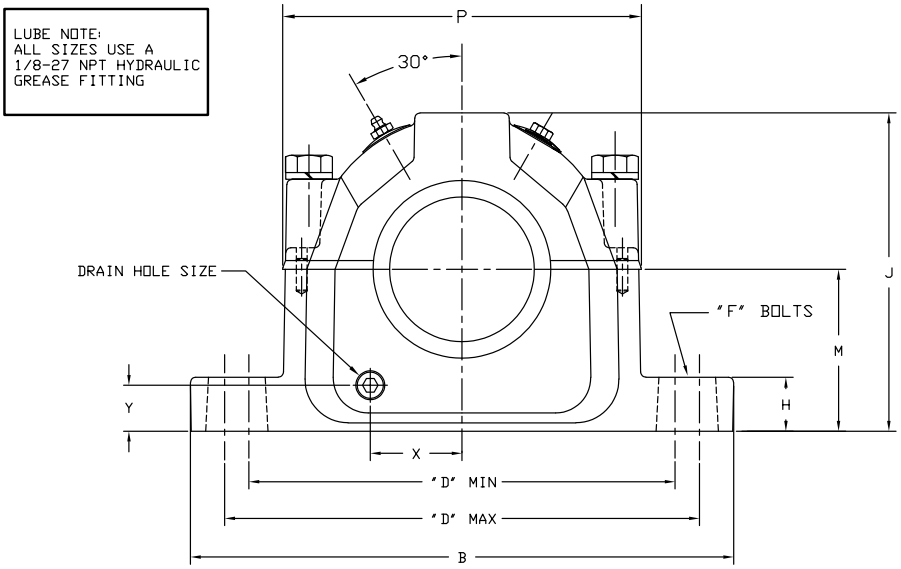

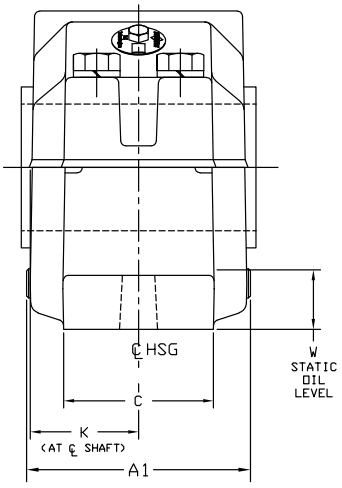

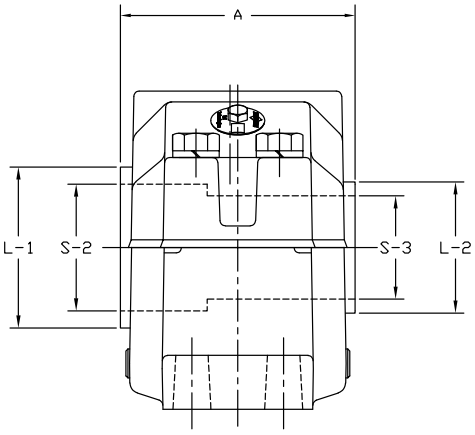

USAF 300 series pillow block – inch

2- and 4-bolt, direct mount

S-2 Shaft size	S-3 Shaft size	Housing	A1 ▲	B	C	D				E	F	
						2-bolt		4-bolt			bolt diameter	
						Min.	Max.	Min.	Max.		2-bolt	4-bolt
1-15/16	1-7/16	308	4.06	8.25	2.34	6.50	7.00	—	—	—	1/2	—
2-1/8	1-11/16	309	4.25	9.63	2.75	7.38	8.25	—	—	—	5/8	—
2-3/8	1-7/8	310	4.70	10.63	2.75	7.75	9.00	—	—	—	5/8	—
2-9/16	2-1/16	311	4.64	11.00	3.13	8.13	9.50	8.13	9.50	1.88	5/8	1/2
2-7/8	2-1/4	312	5.20	11.13	3.13	8.63	9.63	8.63	9.63	1.88	5/8	1/2
3-1/16	2-7/16	313	5.44	12.59	3.50	9.63	11.00	9.63	11.00	2.13	3/4	5/8
3-1/4	2-5/8	314	5.39	12.59	3.50	9.88	11.00	9.88	11.00	2.13	3/4	5/8
3-7/16	2-13/16	315	6.16	13.63	3.88	10.25	11.75	10.38	11.63	2.13	3/4	5/8
3-5/8	3	316	6.38	14.17	3.88	10.88	12.38	10.63	12.50	2.13	3/4	5/8
3-15/16	3-3/16	317	6.78	15.36	4.34	11.63	13.13	11.63	13.13	2.38	7/8	3/4
4-1/2	3-13/16	320	8.05	16.50	4.72	—	—	13.25	14.50	2.75	—	3/4
4-7/8	4-3/16	322	8.27	18.38	5.13	—	—	14.50	16.00	3.25	—	7/8
5-5/16	4-9/16	324	9.36	20.88	6.25	—	—	16.75	18.25	3.75	—	1
5-7/8	4-15/16	326	9.92	21.66	6.25	—	—	17.38	19.25	3.75	—	1
6-1/4	5-5/16	328	9.91	24.75	6.75	—	—	19.38	21.63	4.25	—	1
6-5/8	5-3/4	330	10.41	26.75	7.13	—	—	20.88	23.63	4.63	—	1
7	6-1/16	332	10.81	28.00	7.50	—	—	21.63	24.38	4.50	—	1-1/4
7-7/16	6-7/16	334	11.53	28.75	8.00	—	—	22.50	25.00	5.00	—	1-1/4
8-3/8	7-1/4	338	12.30	32.75	8.88	—	—	24.75	27.88	5.25	—	1-1/2

S-2 Shaft size	S-3 Shaft size	Housing	H	J	K	M	P	Q ★	S ●	W Static oil level	X	Y	Drain hole size
1-15/16	1-7/16	308	1.03	4.58	1.88	2.50	5.13	1.17	0.13	1.19	1.25	0.81	1/8-27NPSI
2-1/8	1-11/16	309	1.03	5.25	1.97	2.75	5.78	1.23	0.13	1.28	1.94	0.83	1/8-27NPSI
2-3/8	1-7/8	310	1.41	5.72	2.20	3.00	6.13	1.38	0.22	1.38	1.53	0.95	1/8-27NPSI
2-9/16	2-1/16	311	1.03	5.94	2.16	3.00	6.50	1.42	0.13	1.44	1.66	0.78	1/8-27NPSI
2-7/8	2-1/4	312	1.25	6.44	2.31	3.25	7.06	1.52	0.13	1.31	1.78	0.88	1/4-18NPSF
3-1/16	2-7/16	313	1.06	6.75	2.42	3.50	7.94	1.58	0.19	1.41	1.97	0.95	1/4-18NPSF
3-1/4	2-5/8	314	1.25	7.38	2.47	3.75	8.19	1.64	0.19	1.47	1.13	1.06	3/8-18NPSF
3-7/16	2-13/16	315	1.44	7.75	2.84	4.00	8.66	1.77	0.19	1.59	1.25	1.13	3/8-18NPSF
3-5/8	3	316	1.22	8.25	2.95	4.25	9.03	1.83	0.19	1.69	2.38	1.17	3/8-18NPSF
3-15/16	3-3/16	317	1.66	8.75	3.16	4.50	9.78	1.91	0.19	1.75	2.63	1.25	3/8-18NPSF
4-1/2	3-13/16	320	1.50	10.25	3.64	5.25	11.25	2.30	0.19	2.03	3.19	1.38	1/2-14NPSF
4-7/8	4-3/16	322	2.06	11.53	3.75	6.00	12.41	2.50	0.19	2.41	3.31	1.63	1/2-14NPSF
5-5/16	4-9/16	324	2.38	12.50	4.33	6.31	14.31	2.64	0.19	2.38	3.59	1.33	1/2-14NPSF
5-7/8	4-15/16	326	2.34	13.31	4.63	6.69	14.91	2.84	0.19	2.44	4.03	1.33	1/2-14NPSF
6-1/4	5-5/16	328	2.88	14.56	4.63	7.06	16.81	3.09	0.19	2.56	4.16	1.33	1/2-14NPSF
6-5/8	5-3/4	330	3.00	15.13	4.88	7.50	17.19	3.27	0.19	2.63	4.22	1.63	1/2-14NPSF
7	6-1/16	332	3.13	15.81	5.06	7.88	18.00	3.44	0.19	2.69	4.75	1.61	1/2-14NPSF
7-7/16	6-7/16	334	3.38	16.63	5.44	8.25	19.00	3.59	0.19	2.75	4.91	1.58	1/2-14NPSF
8-3/8	7-1/4	338	3.75	18.88	5.81	9.50	21.25	3.89	0.19	3.38	5.44	2.03	1/2-14NPSF

▲ Housing width with drain plugs.

★ Distance shaft should extend beyond housing centerline if pillow block is closed end style

● Non-expansion bearing offset from centerline. For expansion bearing S = 0.

USAF 300 series pillow block – inch

Seals

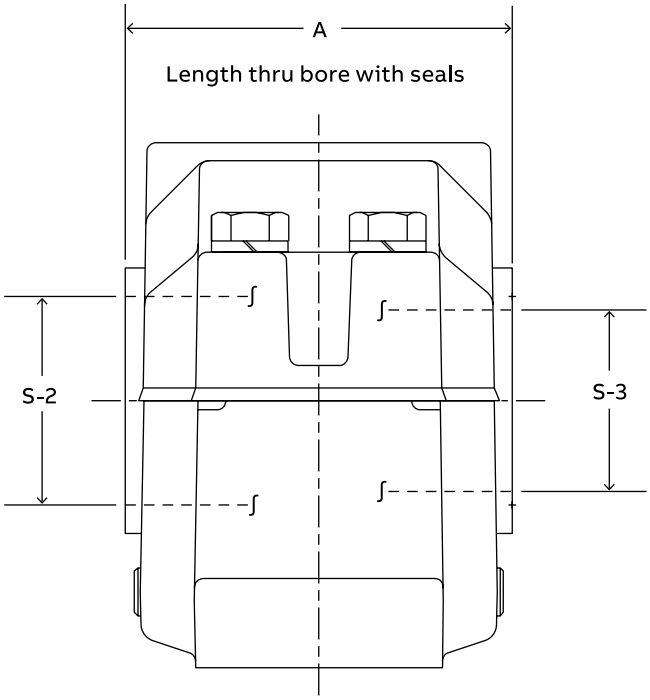

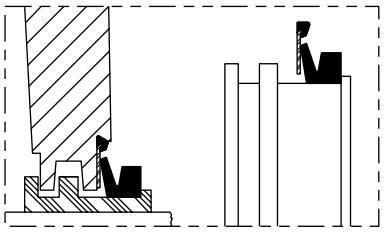

Drop-in Triple-Tect Seal
Dodge exclusive, popular Triple-Tect features with simplified installation.

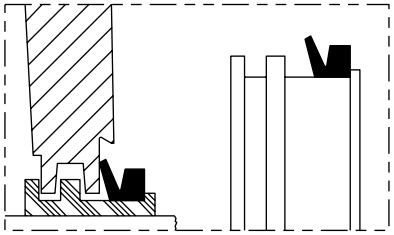

Triple-Tect Seal
General purpose seal for wet or dirty environments

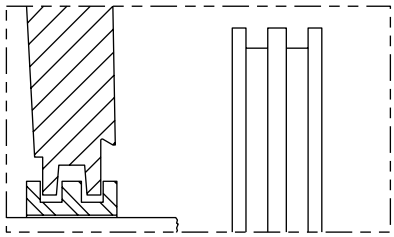

LER Seal
High speed seal for relatively clean environments

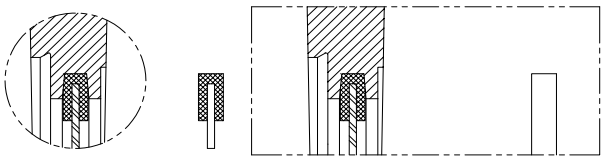

End Cover Seal
Allows use of open shaft housing as closed-end

USAF 300 series pillow block – inch

Seals

S-2 Shaft size	S-3 Shaft size	Housing	Seal group		Part number							A		
					Triple-Tect (TT)		Triple-Tect Drop-In (TTDN)		# Metal Labyrinth (LER)		End cover	TT	TTDN	LER
			S-2	S-3	S-2	S-3	S-2	S-3	S-2	S-3	S-3			
1-15/16	1-7/16	308	12	8	043540	043578	—	—	042512	042193	040700	4.19	4.19	3.64
2-1/8	1-11/16	309	14	10	046464	043579	—	—	046472	042199	040701	4.36	4.36	3.83
2-3/8	1-7/8	310	18	12	046166	046167	—	—	046175	046176	040702	4.81	4.81	4.28
2-9/16	2-1/16	311	22	14	046466	046463	035748	035745	046474	046471	040703	4.80	4.80	4.19
2-7/8	2-1/4	312	26	14	046468	046465	035750	035747	046476	046473	040703	5.02	5.02	4.42
3-1/16	2-7/16	313	28	22	046469	046168	035751	035744	046477	046177	—	5.34	5.34	4.69
3-1/4	2-5/8	314	32	22	046470	046467	035752	035749	046478	046475	—	5.44	5.44	4.80
3-7/16	2-13/16	315	38	24	046401	046400	039290	039289	045928	045927	040705	6.20	6.20	5.59
3-5/8	3	316	38	28	046402	043547	039291	039857	045931	042519	040706	6.42	6.42	5.81
3-15/16	3-3/16	317	42	32	046404	046403	039515	039292	042089	042088	—	6.39	6.39	6.17
4-1/2	3-13/16	320	54	50	043555	046407	—	—	042527	045939	040709	7.86	7.86	7.33
4-7/8	4-3/16	322	56	52	046408	043553	039297	039863	042098	042525	040710	8.09	8.09	7.50
5-5/16	4-9/16	324	58	54	046411	046409	—	—	042248	045943	040711	9.28	9.28	8.69
5-7/8	4-15/16	326	62	56	046410	043556	—	—	042085	042528	040712	9.84	9.84	9.20
6-1/4	5-5/16	328	66	58	046412	046411	—	—	042249	042248	040713	9.78	9.78	9.13
6-5/8	5-3/4	330	70	62	046414	046413	—	—	045951	045949	—	10.39	10.39	9.70
7	6-1/16	332	72	64	043565	046415	—	—	042538	045953	040681	10.69	10.69	9.98
7-7/16	6-7/16	334	76	68	046416	043562	—	—	042049	042535	040682	11.44	11.44	10.73
8-3/8	7-1/4	338	80	74	046420	046419	—	—	042031	042032	—	12.44	12.44	11.70

Note: LER seals are made from aluminum unless otherwise noted by the * symbol.

If an * appears by the part number, the LER seal is manufactured from steel.

USAF 300 series pillow block – inch

22300 spherical roller bearings

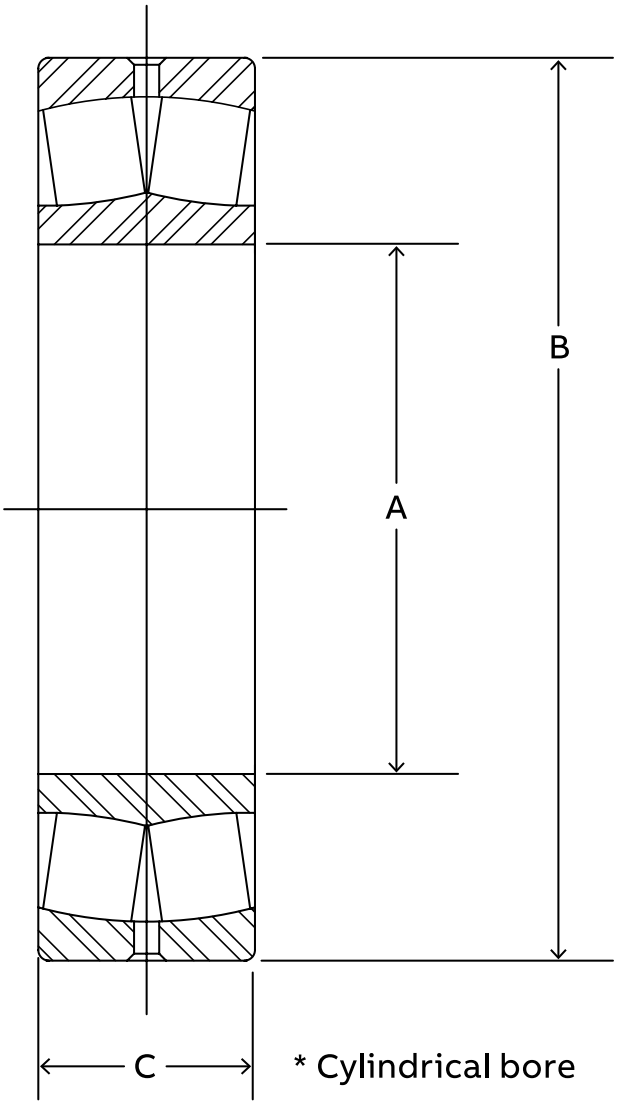

USAF 300 series pillow block – inch

22300 spherical roller bearings

Shaft size under bearing (mm)	Housing	Bearing number	Part number	Approx. weight (lbs)	A in (mm)	B in (mm)	C in (mm)
40	308	22308	423124	2.3	1.5748 (40)	3.5433 (90)	1.2992 (33)
45	309	22309	423125	3.0	1.7717 (45)	3.9370 (100)	1.4173 (36)
50	310	22310	423143	3.9	1.9685 (50)	4.3307 (110)	1.5758 (40)
55	311	22311	423126	5.1	2.1654 (55)	4.7244 (120)	1.6929 (43)
60	312	22312	423127	6.5	2.3622 (60)	5.1181 (130)	1.8110 (46)
65	313	22313	423128	7.8	2.5591 (65)	5.5118 (140)	1.8898 (48)
70	314	22314	423129	9.3	2.7559 (70)	5.9055 (150)	2.0079 (51)
75	315	22315	423130	11.5	2.9528 (75)	6.2992 (160)	2.1654 (55)
80	316	22316	423144	13.1	3.1496 (80)	6.6929 (170)	2.2835 (58)
85	317	22317	423131	15.7	3.3465 (85)	7.0866 (180)	2.3622 (60)
100	320	22320	423132	28.0	3.9370 (100)	8.4646 (215)	2.8740 (73)
110	322	22322	423133	38.8	4.3307 (110)	9.4488 (240)	3.1496 (80)
120	324	22324	423134	48.3	4.7244 (120)	10.2362 (260)	3.3858 (86)
130	326	22326	423135	59.7	5.1181 (130)	11.0236 (280)	3.6614 (93)
140	328	22328	423136	75.4	5.5118 (140)	11.8110 (300)	4.0157 (102)
150	330	22330	423137	90.4	5.9055 (150)	12.5984 (320)	4.2520 (108)
160	332	22332	423138	113.0	6.2992 (160)	13.3858 (350)	4.4882 (114)
170	334	22334	423139	132.0	6.6929 (170)	14.1732 (360)	4.7244 (120)
190	338	22338	423140	179.0	7.4803 (190)	15.7480 (400)	5.1969 (132)

USAF 300 series pillow block – inch

Shaft details

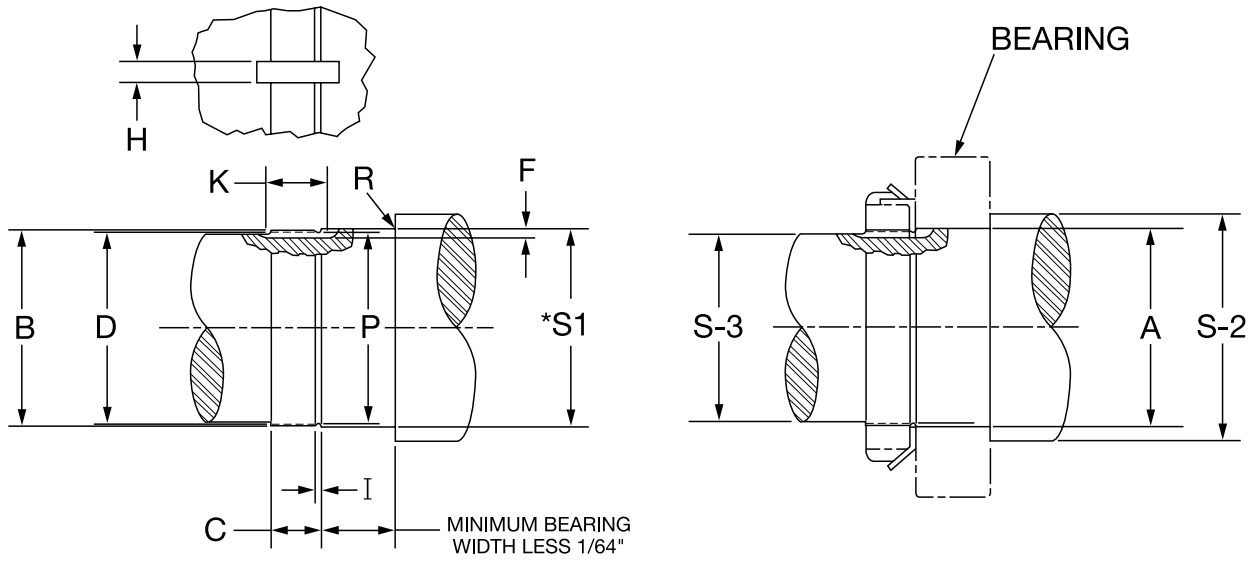

Nominal bearing bore diameter (mm)	Shaft bearing seat diameters (in)					
	Normal load			High load		
	* S-I		Mean fit	* S-I		Mean fit
	Max.	Min.		Max.	Min.	
40	1.5758	1.5752	.0009T	1.5761	1.5655	.0012T
45	1.7727	1.7721		1.7730	1.7724	
50	1.9697	1.9689	.0011T	1.9700	1.9693	.0014T
55	2.1666	2.1658		2.1669	2.1662	
60	2.3634	2.3626		2.3637	2.3630	
65	2.5603	2.5595		2.5606	2.5599	
70	2.7571	2.7563		2.7574	2.7567	
75	2.9540	2.9532		2.9543	2.9536	
80	3.1508	3.1501	.0012T	3.1511	3.1504	.0015T
85	3.3479	3.3470	.0014T	3.3484	3.3475	.0019T
100	3.9384	3.9375		3.9389	3.9380	
110	4.3321	4.3312		4.3326	4.3317	
120	4.7258	4.7249		47263	4.7254	
130	5.1197	5.1187	.0016T	5.1203	5.1193	.0022T
140	5.5134	5.5124		5.5140	5.5130	
150	5.9071	5.9061		5.9077	5.9067	
160	6.3008	6.2998		6.3014	6.3004	
170	6.6945	6.6935		6.6951	6.6941	
190	7.4821	7.4809	.0019T	7.4829	7.4817	.0026T

Normal load

P/C = 0.10 to 0.18

High load

P/C > 0.18

Where: P = Equivalent dynamic load on the bearing (lbs)

C = Basic dynamic load rating of bearing (lbs)

USAF 300 series pillow block – inch

Shaft details

Housing	Lock nut and washer kit part number	A Bearing bore in (mm)	S-2	S-3	Keyway			R Max radius
					F Depth +1/64 -Ø	H Width +1/64 -Ø	K Full depth length	
308	046751	1.5748 (40)	1-15/16	1-7/16	3/32	5/16	21/32	0.059
309	046752	1.7717 (45)	2-1/8	1-11/16	3/32	5/16	11/16	0.059
310	046753	1.9685 (50)	2-3/8	1-7/8	3/32	5/16	3/4	0.079
311	046754	2.1654 (55)	2-9/16	2-1/16	1/8	5/16	3/4	0.079
312	046772	2.3622 (60)	2-7/8	2-1/4	1/8	5/16	25/32	0.079
313	046755	2.5591 (65)	3-1/16	2-7/16	1/8	5/16	13/16	0.079
314	046773	2.7559 (70)	3-1/4	2-5/8	1/8	5/16	29/32	0.079
315	046756	2.9528 (75)	3-7/16	2-13/16	1/8	5/16	15/16	0.079
316	046757	3.1496 (80)	3-5/8	3	1/8	3/8	15/16	0.079
317	046758	3.3465 (85)	3-15/16	3-3/16	1/8	3/8	31/32	0.098
320	046760	3.9370 (100)	4-1/2	3-13/16	5/32	3/8	1-3/16	0.098
322	046761	4.3307 (110)	4-7/8	4-3/16	3/16	3/8	1-7/32	0.098
324	046762	4.7244 (120)	5-5/16	4-9/16	3/16	3/8	1-1/4	0.098
326	046763	5.1181 (130)	5-7/8	4-15/16	3/16	1/2	1-5/16	0.118
328	046764	5.5118 (140)	6-1/4	5-5/16	3/16	5/8	1-3/8	0.118
330	046765	5.9055 (150)	6-5/8	5-3/4	7/32	5/8	1-1/2	0.118
332	046766	6.2992 (160)	7	6-1/16	15/64	5/8	1-9/16	0.118
334	046767	6.6929 (170)	7-7/16	6-7/16	15/64	3/4	1-19/32	0.118
338	046769	7.4803 (190)	8-3/8	7-1/4	15/64	3/4	1-21/32	0.157

Housing	Threads per (in)	B Thread major diameter		D Thread pitch diameter		C Thread length +1/64 -Ø	I Thread relief +1/64 -Ø	P† Thread relief diameter
		Max.	Min.	Max.	Min.			
308	18	1.5630	1.5548	1.5269	1.5224	17/32	3/32	1.4792
309	18	1.7670	1.7588	1.7309	1.7204	17/32	1/8	1.6832
310	18	1.9670	1.9588	1.9309	1.9264	19/32	1/8	1.8832
311	18	2.1570	2.1488	2.1209	2.1159	19/32	1/8	2.0732
312	18	2.3600	2.3518	2.3239	2.3188	5/8	1/8	2.2762
313	18	2.5480	2.5398	2.5119	2.5068	21/32	1/8	2.4642
314	18	2.7510	2.7428	2.7149	2.7098	21/32	1/8	2.6672
315	12	2.9330	2.9218	2.8789	2.8735	11/16	5/32	2.7995
316	12	3.1370	3.1258	3.0829	3.0770	11/16	5/32	3.0035
317	12	3.3400	3.3288	3.2859	3.2800	23/32	5/32	3.2065
320	12	3.9180	3.9068	3.8639	3.8565	7/8	5/32	3.7845
322	12	4.325	4.3138	4.2709	4.2626	29/32	5/32	4.1915
324	12	4.716	4.7048	4.6619	4.6536	15/16	5/32	4.5825
326	12	5.106	5.0948	5.0519	5.0436	1	5/32	4.9725
328	12	5.497	5.4858	5.4429	5.4346	1-1/16	5/32	5.3635
330	12	5.888	5.8768	5.8339	5.8256	1-1/8	5/32	5.7545
332	8	6.284	6.2688	6.2028	6.1937	1-3/16	1/4	6.0993
334	8	6.659	6.6438	6.5778	6.5687	1-7/32	1/4	6.4743
338	8	7.472	7.4568	7.3908	7.3817	1-9/32	1/4	7.2873

† Tolerance +/-.005 through 2.6672 dia.; +/-.010 for larger sizes.

USAF 300 series pillow block – inch

Lock nut and washer

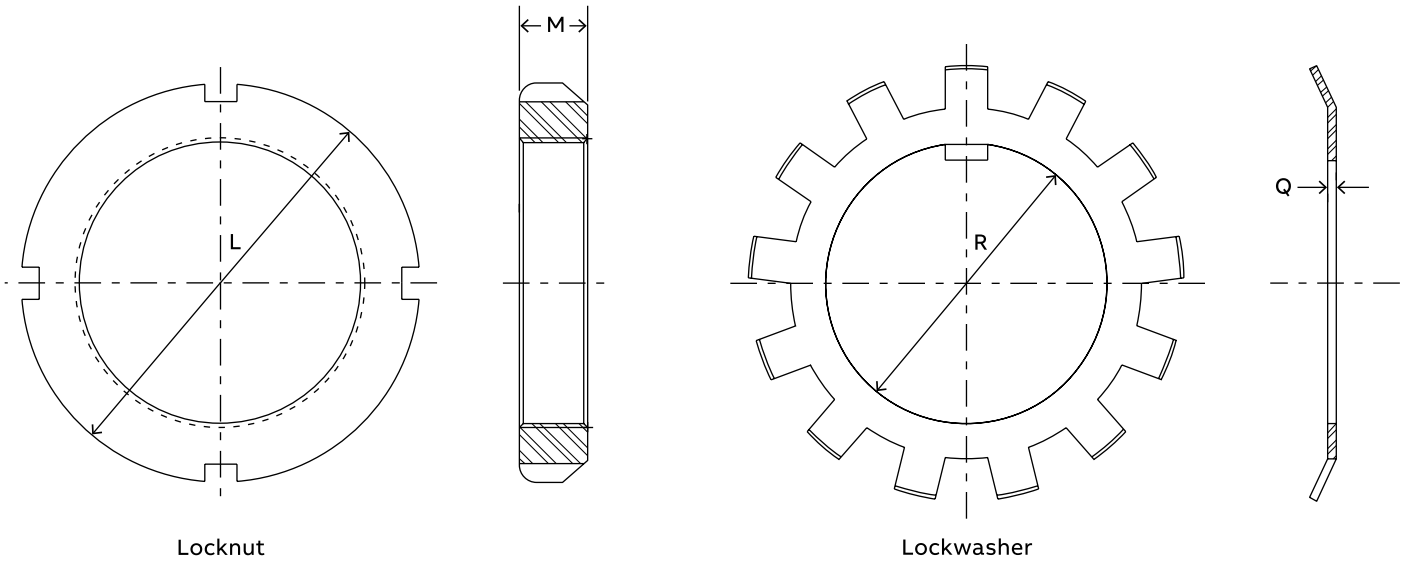

Locknut

Lockwasher

Housing	Lock nut		Lock washer		L	M	R	Q
	Description	Part number	Description	Part number				
308	N08	407305	W08	419151	2.25	0.44	1.583	0.048
309	N09	419187	W09	419180	2.53	0.44	1.792	0.048
310	N10	419188	W10	419181	2.69	0.50	1.992	0.048
311	N11	419184	W11	419182	2.97	0.50	2.182	0.053
312	N12	407302	W12	419008	3.16	0.53	2.400	0.053
313	N13	419185	W13	419183	3.38	0.56	2.588	0.053
314	N14	407306	W14	419153	3.62	0.56	2.791	0.053
315	AN15	460901	W15	419150	3.88	0.59	2.988	0.072
316	AN16	460902	W16	419152	4.16	0.59	3.192	0.072
317	AN17	460903	W17	419154	4.41	0.62	3.410	0.072
320	AN20	460905	W20	419158	5.19	0.75	4.003	0.094
322	AN22	460906	W22	419160	5.72	0.78	4.410	0.125
324	AN24	041071	W24	419162	6.12	0.81	4.816	0.125
326	AN26	041064	W26	419164	6.75	0.88	5.209	0.125
328	AN28	041065	W28	419166	7.09	0.94	5.600	0.125
330	AN30	041072	W30	419168	7.69	0.97	6.001	0.156
332	AN32	041066	W32	419170	8.06	1.03	6.407	0.156
334	AN34	041067	W34	419172	8.66	1.06	6.782	0.156
338	AN38	041068	W38	419176	9.47	1.12	7.595	0.156

USAF 300 series pillow block – inch

Stabilization ring

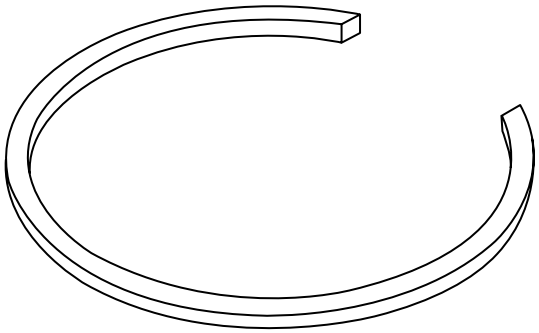

Housing	Stabilizing ring number	Stabilizing ring part number ▲
509	9-9	041987
510	10-8	042335
511	11-9	042315
513	13-0	042316
515/215	15-0	041174
516/216	16-13	041172
517/217	17-14	041175
518/218	18-15	041173
520/220	20-17	041176
522/222	22-19	041177
524/224	24-20	041185
526/226	26-0	041178
528/228	28-0	041179
530/230	30-0	041186
532/232	32-0	041180
534/234	34-0	041181
536/236	36-30	041184
538/238	38-32	041182
540/240	40-34	046639
544S/544/244	44-38	041183
* 048	A8897	041161
* 052	A8898	422554
* 056/056L	A8819	041213

Housing	Stabilizing ring number	Stabilizing ring part number ▲
308	10-8	042335
609/309	11-9	042315
610/310	0-10	046642
611/311	6-11	046632
312	15-0	041174
613/313	16-13	041172
314	17-14	041175
615/315	18-15	041173
616/316	19-16	046643
617/317	20-17	041176
620/320	24-20	041185
622/322	0-22	046635
624/324	0-24	046634
626/326	0-26	046637
628/328	0-28	046638
630/330	36-30	041184
632/332	38-32	041182
634/334	40-34	046639
638/338	44-38	041183

* Two stabilizing rings required per housing.

▲ Part numbers for reference only.
Housings come equipped with stabilizing rings enclosed.

Accessories

USAF 200 and 500 series pillow block – inch

Dowel pin, lubrication, and mounting hole positions

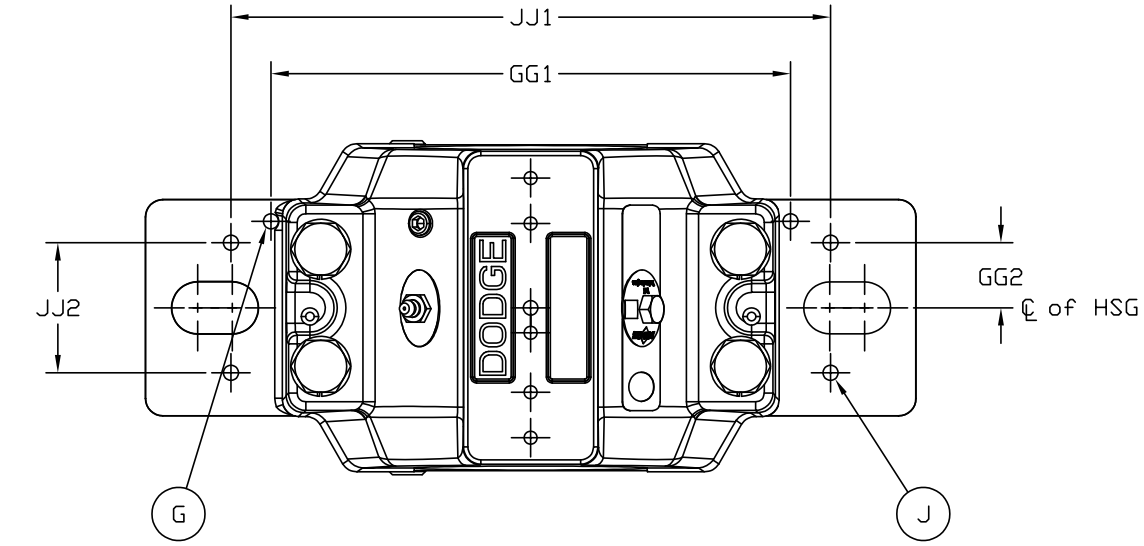

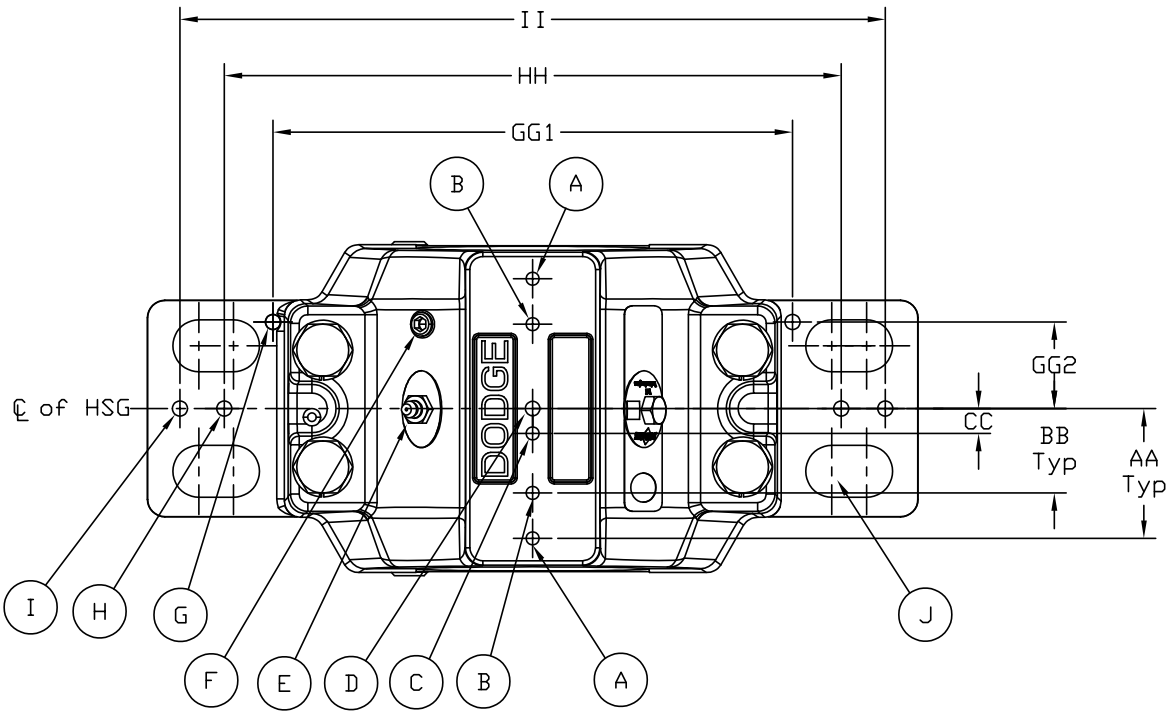

USAF 200 and 500 series pillow block – inch

Dowel pin, lubrication, and mounting hole positions

Item	Description
A	Optional seal grease location
B	Optional location for vent, vibration pickup and/or grease location for non W33 grooved bearing
C	Position for thermocouple location
D	Position for lubrication of bearing with W33 groove
E	Lubrication port for W33 groove
	Groove bearing drilled standard on pillow blocks
F	Pre-drilled and tap location for vent or side lubrication for bearing without W33 groove
G	Dowel pin location for metric plummer blocks
H	Drilling location for two bolt mounting or optional dowel pin location
I	Optional location for dowel pin location
J	Drilling location for four bolt mounting or optional dowel pin location

USAF housing	AA	BB	CC	GG1	GG2	G Max dia.	HH	H		II	JJ1	JJ2	J	
								Hole size	Bolt size				Hole size	Bolt size
509	1.45	0.84	0.25	5.31	0.91	15/64	—	—	—	—	6.31	1.34	7/16	3/8
510	1.53	0.89	0.27	5.31	0.91	15/64	—	—	—	—	6.31	1.34	7/16	3/8
511	1.66	1.00	0.28	6.69	1.06	5/16	—	—	—	—	7.88	1.56	9/16	1/2
513	1.84	1.28	0.34	7.50	1.25	5/16	9.06	11/16	5/8	10.25	8.66	1.88	9/16	1/2
515/215	1.88	1.22	0.36	7.50	1.25	5/16	9.06	11/16	5/8	10.25	8.66	1.88	9/16	1/2
516/216	2.03	1.38	0.31	8.59	1.38	5/16	10.25	13/16	3/4	11.59	9.94	2.06	11/16	5/8
517/217	2.06	1.47	0.41	8.59	1.38	5/16	10.25	13/16	3/4	11.59	9.94	2.06	11/16	5/8
518/218	2.38	1.50	0.44	9.44	1.45	5/16	11.91	13/16	3/4	12.63	11.03	2.28	11/16	5/8
520/220	2.09	1.72	0.53	10.25	1.61	5/16	12.59	15/16	7/8	14.36	11.81	2.59	13/16	3/4
522/222	2.81	1.94	0.59	11.03	1.78	15/32	13.78	15/16	7/8	15.50	12.91	2.91	13/16	3/4
524/224	3.13	1.91	0.69	11.42	1.78	15/32	13.88	15/16	7/8	15.88	13.00	2.91	13/16	3/4
526/226	3.25	2.09	0.75	12.78	2.05	15/32	14.97	1-1/16	1	17.38	14.56	3.09	15/16	7/8
528/228	3.48	2.53	0.75	13.59	2.16	15/32	16.53	1-5/16	1-1/4	18.69	15.75	3.63	1-1/16	1
530/230	3.84	2.53	0.81	14.75	2.38	15/32	17.72	1-5/16	1-1/4	19.50	16.94	3.94	1-1/16	1
532/232	4.09	2.56	0.91	15.56	2.36	15/32	18.50	1-5/16	1-1/4	20.28	17.72	3.94	1-1/16	1
534/234	4.13	3.00	1.00	—	—	—	20.50	1-9/16	1-1/2	23.38	—	—	—	—
536/236	4.31	3.00	1.00	—	—	—	22.25	1-9/16	1-1/2	25.25	—	—	—	—
538/238	4.50	3.13	1.13	—	—	—	23.00	1-9/16	1-1/2	26.63	—	—	—	—
540/240	4.86	3.22	1.13	—	—	—	23.75	1-9/16	1-1/2	27.25	—	—	—	—
544/244	5.20	3.63	1.19	—	—	—	26.83	1-13/16	1-3/4	30.75	—	—	—	—
048	4.86	3.22	1.13	—	—	—	23.75	1-9/16	1-1/2	27.25	—	—	—	—
052	5.20	3.63	1.19	—	—	—	26.83	1-13/16	1-3/4	30.75	—	—	—	—
056	5.67	3.75	1.20	—	—	—	27.88	2-1/16	2	32.25	—	—	—	—

USAF 300 and 600 series pillow block – inch

Dowel pin, lubrication, and mounting hole positions

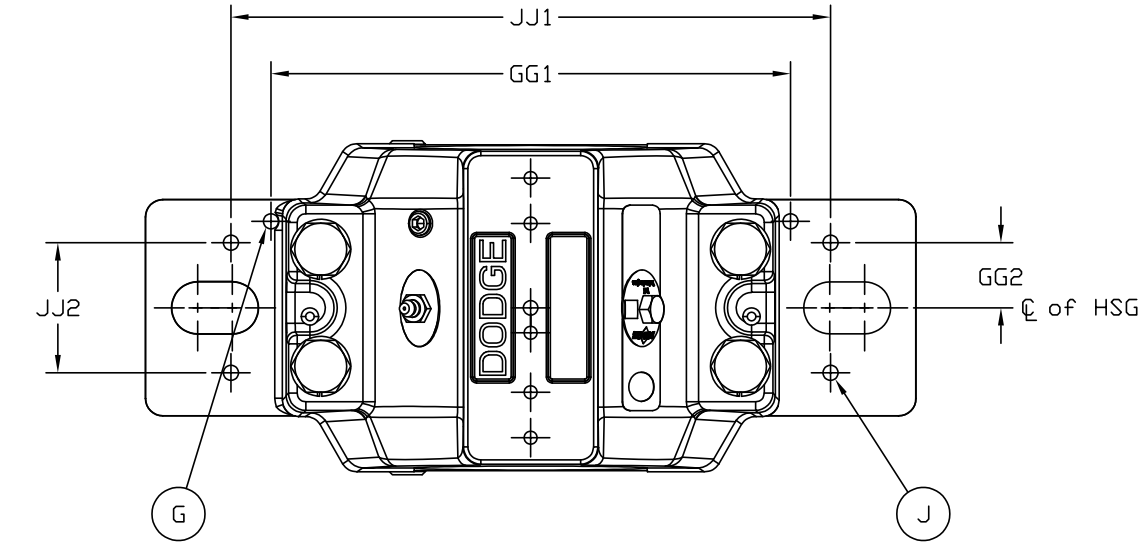

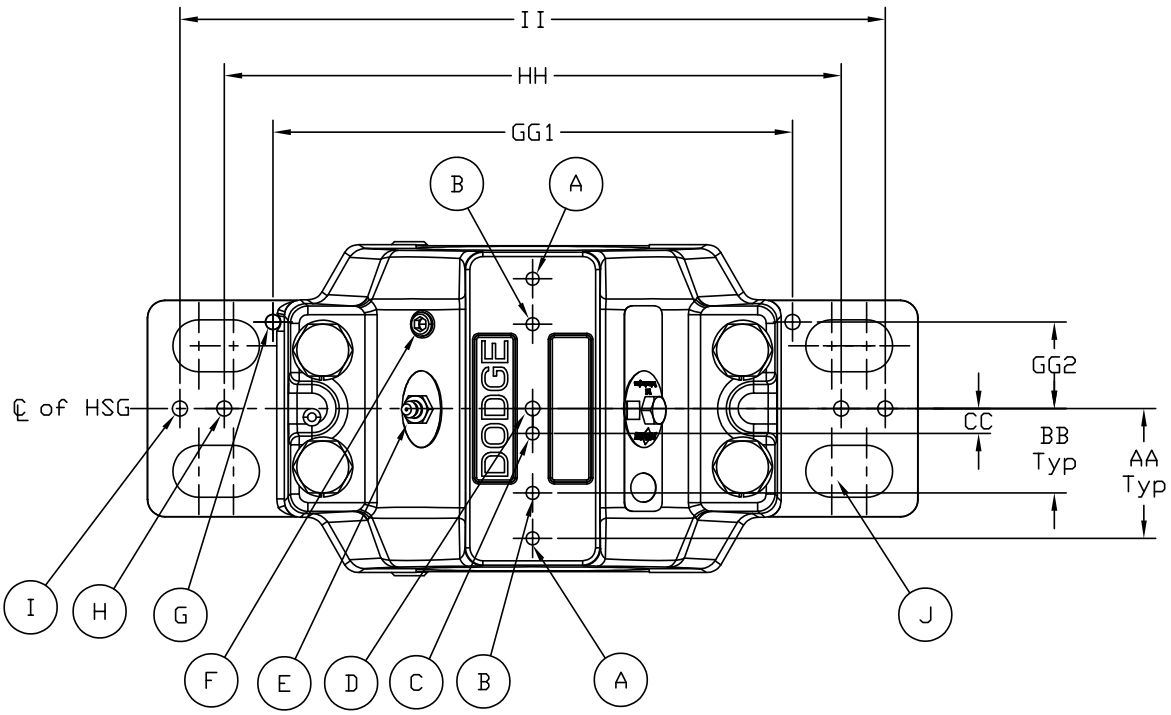

USAF 300 and 600 series pillow block – inch

Dowel pin, lubrication, and mounting hole positions

Item	Description
A	Optional seal grease location
B	Optional location for vent, vibration pickup and/or grease location for non W33 grooved bearing
C	Position for thermocouple location
D	Position for lubrication of bearing with W33 groove
E	Lubrication port for W33 groove
	Groove bearing drilled standard on pillow blocks
F	Pre-drilled and tap location for vent or side lubrication for bearing without W33 groove
G	Dowel pin location for metric plummer blocks
H	Drilling location for two bolt mounting or optional dowel pin location
I	Optional location for dowel pin location
J	Drilling location for four bolt mounting or optional dowel pin location

USAF housing	AA	BB	CC	GG1	GG2	G Max dia.	HH	H		II	JJ1	JJ2	J	
								Hole size	Bolt size				Hole size	Bolt size
308	1.53	0.89	0.27	5.31	0.91	15/64	—	—	—	—	6.31	1.34	7/16	3/8
609/309	1.66	1.00	0.28	6.69	1.06	5/16	—	—	—	—	7.88	1.56	9/16	1/2
610/310	1.84	1.00	0.34	6.77	1.06	5/16	—	—	—	—	7.88	1.56	9/16	1/2
611/311	1.84	1.56	0.34	7.50	1.25	5/16	9.06	11/16	5/8	10.25	8.66	1.88	9/16	1/2
312	1.88	1.22	0.36	7.50	1.25	5/16	9.06	11/16	5/8	10.25	8.66	1.88	9/16	1/2
613/313	2.03	1.38	0.31	8.59	1.38	5/16	10.25	13/16	3/4	11.59	9.94	2.06	11/16	5/8
314	2.06	1.47	0.41	8.59	1.38	5/16	10.25	13/16	3/4	11.59	9.94	2.06	11/16	5/8
615/315	2.38	1.50	0.44	9.44	1.45	5/16	11.41	13/16	3/4	12.63	11.03	2.28	11/16	5/8
616/316	2.53	1.63	0.53	9.44	1.45	5/16	11.41	13/16	3/4	13.00	11.03	2.28	11/16	5/8
617/317	2.69	1.72	0.53	10.25	1.61	5/16	12.59	15/16	7/8	14.36	11.81	2.59	13/16	3/4
620/320	3.13	1.91	0.69	11.42	1.18	15/32	13.88	15/16	7/8	15.88	13.00	2.91	13/16	3/4
622/322	3.25	2.09	0.75	12.78	2.05	15/32	14.99	1-1/16	1	17.38	14.56	3.16	15/16	7/8
624/324	3.84	2.53	0.81	14.75	2.38	15/32	17.72	1-5/16	1-1/4	19.50	16.94	3.94	1-1/16	1
626/326	4.09	2.56	0.91	15.56	2.36	15/32	18.50	1-5/16	1-1/4	20.28	17.72	3.94	1-1/16	1
628/328	4.13	3.00	1.00	—	—	—	20.50	1-9/16	1-1/2	23.38	—	—	—	—
630/330	4.31	3.00	1.00	—	—	—	22.25	1-9/16	1-1/2	25.25	—	—	—	—
632/332	4.50	3.13	1.13	—	—	—	23.00	1-9/16	1-1/2	26.62	—	—	—	—
634/334	4.86	3.22	1.13	—	—	—	23.75	1-9/16	1-1/2	27.25	—	—	—	—
638/338	5.20	3.63	1.19	—	—	—	26.31	1-13/16	1-3/4	30.75	—	—	—	—

USAF housing versus seal group – inch

Interchange chart

All Dodge seals are identified as follows:



Seal group numbers identify common housing seal grooves found on different series housings. The standard shaft sizes for various housings are shown.

Shaft size	Housing	Seal* group
1-7/16	509	08
	308	
	609	
1-11/16	510	10
	309	
	610	
1-7/8	310	12
1-15/16	511	
	308	
	611	
2-1/16	311	14
2-1/8	309	
2-3/16	513	
	613	
2-1/4	312	
2-3/8	310	18
2-7/16	515	20
	615	
	313	22
2-1/2	515	20
	615	
2-5/8	314	22
2-9/16	311	
2-11/16	516	24
	616	
2-3/4	516	
	616	
2-13/16	215	
	315	
2-7/8	312	26
2-15/16	517	28
	617	
3	216	
	316	
	517	
	617	
3-1/16	313	32
3-3/16	217	
	317	
	518	34
3-1/4	314	32
3-3/8	218	36
3-7/16	215	38
	315	
	520	46
	620	
3-1/2	520	
	620	

Shaft size	Housing	Seal* group
3-5/8	216	38
	316	
3-13/16	220	50
	320	
3-15/16	217	42
	317	
	522	50
	622	
4	522	
	622	
4-1/8	218	44
4-3/16	524	52
	222	
	624	
	322	
4-7/16	526	54
	626	
4-1/2	220	
	320	
	526	
	626	
4-9/16	224	
	324	
4-7/8	222	56
	322	
4-15/16	226	
	326	
	528	
	628	
5	528	
	628	
5-3/16	530	
	630	
5-5/16	224	58
	228	
	324	58
	328	
5-7/16	532	60
	632	
5-1/2	532	
	632	
5-3/4	230	62
	330	
5-7/8	226	
	326	
5-15/16	534	64
	634	
6	534	
	634	
6-1/16	232	
	332	

Shaft size	Housing	Seal* group
6-1/4	228	66
	328	
6-7/16	334	68
	234	
	536	
6-1/2	536	
6-5/8	230	70
	330	
6-7/8	236	72
6-15/16	538	
	638	
7	232	
	332	
	538	
	638	
7-3/16	540	74
7-1/4	238	
	338	
7-7/16	334	76
	234	
7-1/2	544S	
7-5/8	240	78
7-13/16	236	
7-15/16	544	
8		
8-5/16	244	80
8-3/8	238	
	338	
8-7/16	048	90
8-1/2		
8-3/4	240	82
8-15/16	048	90
9	3248	
9-7/16	052	84
9-1/2	3152	
	3252	
9-9/16	244	
9-15/16	56	92
10		
10-7/16	056L	94
10-1/2	3156	
	3256	
10-15/16	060	96
11	3160	
	3260	
11-7/16	064	98
11-1/2		

Shaft size	Housing	Seal* group
11-15/16	064L	100
12	3164	
	3264	
12-7/16	068	102
12-1/2	3168	
	3268	
12-15/16	072	104
13		
13-7/16	072L	106
13-1/2	3172	
13-15/16	076	108
14	3176	
15	080	110
15-3/4	084	112

Seal groups in 200/300 housing require two seals of different diameters.

Cool Lube-2 system

Custom engineered for oil lubricated, mounted bearings on fan applications. The Cool Lube system provides an attractive and reliable alternative to conventional grease and static oil bearing lubrication methods for industrial fan applications. It is particularly suited for applications where bearing operating temperatures and speeds approach maximum permissible levels and for harsh and dirty environments.

Enhance your spherical roller bearing operation by continuous oil cooling, filtration, and proper oil level maintenance while your fan is running. 80 percent of all mounted bearing failures are caused by contamination and lubrication issues. The Cool Lube system helps to minimize this risk.

The Cool Lube system provides reduced maintenance costs and increased uptime by providing:

- **Bearing temperature reduction:** Increases bearing reliability through bearing temperature reduction. Reducing bearing operating temperatures is proven to significantly increase roller bearing fatigue life.
- **Oil filtration:** Increases bearing life and extends maintenance periods through continuous oil filtration. Cool Lube System continuously circulates and filters harmful particles from the bearing oil sump.
- **Automatic oil level control:** Cool Lube System will maintain the proper oil level within the oil sump.

One Cool Lube system for two (2) mounted bearings:

Dodge part numbers with flow meter range of 0.05 to 0.50 GPM

- 063485 for three phase motor
- 063486 for single phase motor
- 078327 for XP (Exp. Proof) three phase motor
- 078328 for 575 VAC three phase motor

Dodge part numbers with flow meter range of 0.50 to 4.0 GPM

- 063487 for three phase motor
- 063488 for single phase motor
- 078289 for XP (Exp. Proof) three phase motor
- 078290 for 575 VAC three phase motor



Cool Lube-2 system specifications:

- 5 gallon tank with removable cover
- Pump 2.0 GPM flow
- In-line filter with clog indicator and clog auto-bypass
- 3-way valve to change filter while unit is in operation
- Pump safety relief valve
- Bearing line relief valve
- Filter and bearing supply pressure gauges
- Air to oil heat exchanger
- Two supply line needle valves and flow meters with flow range 0.05 to 0.50 GPM or 0.5 to 4.0 GPM
- Temperature gauge
- Oil sight gauge
- Reservoir breather cap
- Baldor NEMA motor
- All Components mounted to a base plate

Optional features:

- 260 Watt oil heater with thermostat sold separately.
  If required order one of the following:
  - Part number 434725 – 260 watt x 120v heater
  - Part number 434726 – 260 watt x 240v heater
- Oil level switch
- Temperature/Oil level switch assembly
  - Part number 434941 (sold separately)
- Duplex dual filter arrangement

Note: Replacement filter part number 078358

Cool Lube-2 system

Cool Lube system helps to

Prevent bearing mechanical distress



- Lowers internal bearing friction thus decreasing bearing operating temperatures
- Minimizes roller to raceway, metal to metal contact
- Reduces roller skidding damage that can occur in lightly loaded applications
- Supplies lubricant directly to load carrying rolling elements
- Increases lube life due to lower temperatures
- Minimizes cage sliding friction wear
- Minimizes effect of ineffective sealing

Prevent bearing contamination

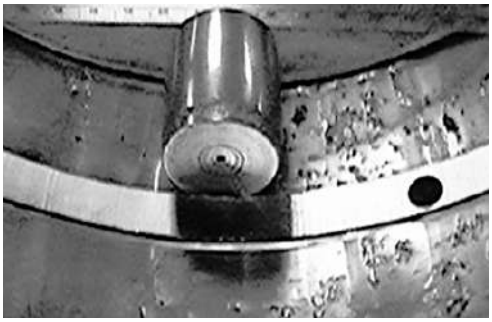

- Filters out contamination which has passed through seals
- Helps to remove water contamination due to condensation from bearings if a water absorbing filter is used
- Flushes worn raceway, rollers and cage particles from bearings
- Removes contamination caused during installation

Lower maintenance costs

- Oil change outs are simple
- No need to break housing cap bolts to clean out old grease
- Oil can be inspected for distress on a regular basis to determine oil PM schedule
- Lower bearing temperatures increase service life
- Lower contamination levels increase service life

Once bearing raceway fatigue begins progression of damage is rapid.



At first sign of damage **After 1,000 hours** **After 1,200 hours**

Notes

Specialty (spherical)

B25-1	**Specialty (spherical)**
B25-2	**Features and benefits**
B25-2	**Specification**
B25-3	**How to order**
B25-3	**Nomenclature**
B25-4	**Selection**
B25-10	**Dimensions**
B25-10	Unisphere® II pillow block
B25-12	Unisphere II flange
B25-14	Unisphere II bearing inserts

Features and benefits

Unisphere II

Unisphere II mounted spherical roller bearings are general purpose, high-capacity double-row spherical roller bearings. Unisphere II bearings are mounted in single-piece, precision-machined housings. The bearings are mounted to shafts by means of set screw collars featuring 65-degree set screw spacing for maximum clamping force. With the capability to withstand combined radial and thrust loads, Unisphere II bearings are built for survival in a variety of rugged conditions to maximize uptime and cost savings.





Key features

- High-capacity, double-row spherical rollers offer approximately five times the capacity rating of ball bearings
- Dimensionally-interchangeable with mounted ball bearings in length-through-bore, base-to-center height, and footprint
- 65-degree Springlok collar maximizes holding power
- Proven "R" seal features contact lip crimped to the outer raceway, preventing contamination for extended life
- Tapered seal landing maintains full contact during maximum misalignment
- Ductile-iron pillow block housing with 65,000 PSI tensile strength is 92 percent the strength of steel
- 2-bolt pillow blocks and 4-bolt flanges in bore sizes from 1-7/16 inch to 4 inch
- Sensor-ready for condition monitoring
- Intelli-Lube compatible to effortlessly extend the life of your bearings

Specification

Unisphere II pillow block housings are made of high-performance ductile iron with a 65,000 PSI tensile strength. Unisphere II flange housings are made of high-performance cast iron. Housings are engineered for performance in extremely harsh environments, with special finishes and stainless hardware available if required.

Housings are available in a variety of standard configurations from pillow blocks to flanges. Rubbing lip seals are standard on all units.

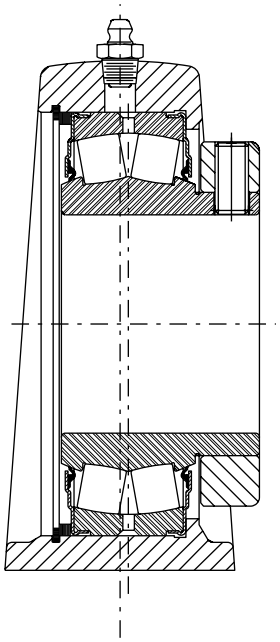

Compact, power-dense design

How to order

Unisphere II

There are two ways to specify Dodge bearings—by six-digit part number or by description. Most of the products offered have part numbers with listings shown throughout this catalog. Use of part numbers ensures accurate order processing.

When part numbers are not shown, the product may be specified by description. This method is used when ordering units that include modifications or options. To order by description, use the nomenclature key shown for each product, adding any special instructions to the end of the description for options not covered by the nomenclature.

Special bearing requirements

Depending on the bearing, a wide variety of lubricants, seals, locking devices, finishes, and adjustments are available for a wide range of applications from general purpose to extreme ambient temperatures, high speeds, or high loads.

Special lubricant options usually involve set-up charges, minimum quantities, and price premiums. To order, specify the type of lubricant required at the end of the product name or after the standard part number.

Example:

F4B-XX-207 except with Mobil HTS #2 grease

or

P/N-XXXXXX except with Mobil HTS #2 grease

Other special requirements not listed

For applications requiring modifications not listed, contact Application Engineering for bearings at +1 864 284 5700.

Nomenclature

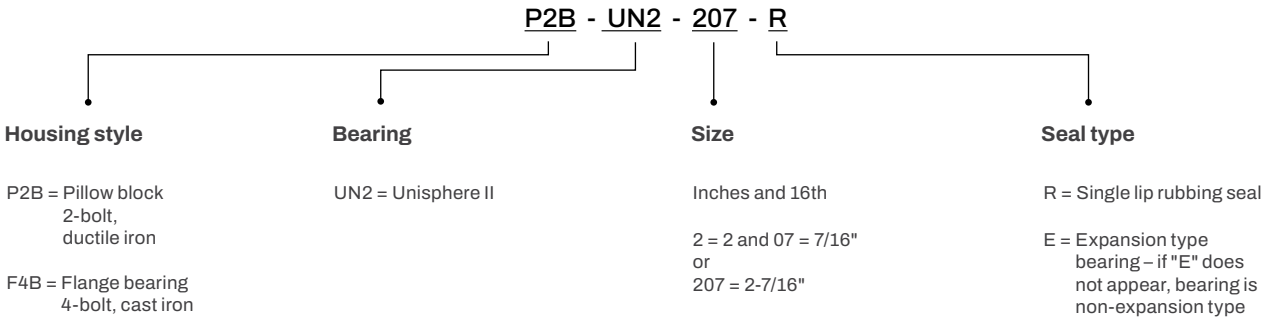

Selection

Unisphere II

Unisphere II mounted spherical roller bearings have the capacity to carry both heavy radial loads and combined radial and thrust loads. The maximum recommended load which can be applied is limited by various components in the system such as bearing, housing, shaft, shaft attachment, speed and life requirements as listed in this catalog. Unisphere II spherical roller bearings have been applied successfully even when these limits have been exceeded under controlled operating conditions. Contact Application Engineering at +1 864 284 5700 for applications which exceed the recommendations of this catalog.

L_{10} hours life – The life which may be expected from at least 90 percent of a given group of bearings operating under identical conditions.

$$L_{10} = \left(\frac{C}{P}\right)^{10/3} \times \left(\frac{16{,}667}{rpm}\right)$$

Where: C_{90} = Dynamic capacity, lbs (Table 1 and Table 2)

P = Equivalent radial load, lbs

General

Heavy service - For heavy shock loads, frequent shock loads, or severe vibrations, add up to 50 percent (according to severity of conditions) to the equivalent radial load to obtain a modified equivalent radial load. Consult Application Engineering for additional selection assistance.

Thrust load values shown in the table below are recommended as a guide for general applications that will give adequate L_{10} life. Spherical bearings require a radial load at least equal to the thrust load for proper operation. If the thrust load exceeds this limit, consult Application Engineering. Where substantial radial load is also present, it is advisable to calculate actual L_{10} life to assure that it meets the requirements. The effectiveness of the shaft attachment to carry thrust load depends on proper tightening of the set screws, shaft tolerance and shaft deflections. Therefore, it is advisable to use auxiliary thrust carrying devices such as shaft shoulder, snap ring or a thrust collar to locate the bearing under thrust loads heavier than shown below, or where extreme reliability is desired.

Rpm range	20—200	201—2000	Over 2000
Recommended thrust load	C/20	C/40	C/60

The shaft tolerances recommended below are adequate for normal radial and radial/thrust load applications. The radial load is limited by the attachment to the shaft (see Table 1). Where the applied radial load (F_R) exceeds this limit (maximum allowable slip fit radial load), a snug-to-light press fit of the shaft is required. Since the allowable load, especially at a low speed, is very large, the shaft should be checked to assure adequate shaft strength.

The magnitude and direction of both the thrust and radial load must be taken into account when selecting a housing. When pillow blocks are utilized, heavy loads should be directed through the base. Where uplift loads are involved, see Table 5 for maximum values. Where a load pulls the housing away from the mounting base, both the hold-down bolts and housing must be of adequate strength. Auxiliary load carrying devices such as shear bars are advisable for side or end loading of pillow blocks and radial loads for flange units.

Shaft tolerances

Shaft size (in)	Unisphere II (in)
Up to 1-1/2	+.0000 to -.0005
1-9/16 to 4	+.000 to -.001
4-7/16 to 5	+.000 to -.0015

Bearing supporting radial loads only

1. Define L_{10} life hours desired.
2. Establish bearing radial load, F_R
   (F_R = P for pure radial load conditions).
3. Establish rpm.

Using the easy selection Table 2, find, under the rpm column, the equivalent radial load that equals or is slightly higher than the application radial load for the desired life. The shaft size on the far left will be the minimum shaft size that you can use for your application.

If the desired life is different than the values shown on the chart, use alternate method A shown below.

Example:

L_{10} life = 30,000 hours

Radial load = 4,000 lbs

Rpm = 1,020

At the intersection of the 1,000 rpm column and the 30,000 hours L_{10} life row, the equivalent radial load of 4,362 lbs exceeds the 3,800 lbs radial load for shaft sizes 2-1/8 to 2-1/4 inches. A bearing with bore ranging from 2-1/8 to 2-1/4 inches may be used for this application.

Unisphere II

Alternate method A – Selecting a bearing for an L_{10} life value not shown in the Easy Selection chart.

The L_{10} life equation can be rearranged so that the bearing dynamic capacity C is identified in terms of L_{10}, rpm and P.

$$C = \left(\frac{L_{10} \times rpm}{16{,}667} \right)^{0.3} X \; P$$

($P = F_R$ for pure radial load conditions)

Since the L_{10}, rpm and P are known, solve for C. Select from the dynamic capacity column on Table 1 the C value equal to or greater than the C value just calculated. The bore size on the far left represents the proper bore size selection. Check that the application rpm does not exceed the maximum rpm on Table 1. Also check that the radial load does not exceed the maximum allowable slip fit radial load shown on Table 1. If it does, a line-to-line to light press fit of shaft is required. When selecting an L_{10} life of less than 30,000 hours, particular attention must be paid to shaft deflection and proper lubricant selection.

Selecting bearings supporting combination radial and thrust loads

When a bearing supports both a radial load and a thrust load, the loading on the two rows is shared unequally depending on the ratio of thrust to radial load. The use of the X (radial factor) and Y (thrust factor) from Table 1 converts the applied thrust load and radial loads to an equivalent radial load having the same effect on the life of the bearing as a radial load of this magnitude.

The equivalent radial load:

$$P = XF_R + YF_A$$

Where:

P = Equivalent radial load, lbs

F_R = Radial load, lbs (see Table 1 for allowable slip fit maximum load)

F_A = Thrust (axial) load, lbs

e = Thrust load to radial load factor (Table 1)

X = Radial load factor (Table 1)

Y = Thrust load factor (Table 1)

To find X and Y, calculate F_A/F_R and compare to e for the selected bore size. Determine X and Y from Table 1 depending on whether F_A/F_R is equal to or less than e, or F_A/F_R is greater than e. Substitute all known values into the equivalent radial load equation. P (equivalent radial load) can be used in the life formula to determine L_{10}, or it can be compared to the allowable equivalent radial load ratings for the speed and hours life desired in the easy selection Table 2.

Selecting bearings supporting only thrust loads

Spherical roller bearings generally are not recommended for pure thrust load applications. However, they will perform satisfactorily under very light pure thrust loads. Consult Application Engineering at +1 864 284 5700.

Selecting lubrication

Unisphere II spherical roller bearings are lubricated at the factory with Mobilgrease XHP222 grease. Mobilgrease XHP222 is a superior industrial grease using a lithium complex thickener and highly refined base oil. This grease will adequately handle low and medium speeds with low and medium loads at normal temperatures as defined on Table 4. For very low and high speeds, for heavy loads and for low and high temperatures, special greases must be used. Contact Application Engineering at +1 864 284 5700. Dodge engineers will recommend bearings and lubricants for the above unusual conditions. Dodge also has the expertise to custom design and build special bearings for your needs. The only maintenance requirement for Unisphere II bearings is periodic relubrication at regular intervals as outlined in the appropriate instruction manuals.

Misalignment considerations

In nearly all applications, good design practice requires two bearings supporting the shaft. In cases where three or more bearings are installed, unless precautions are taken to line the bearings up both vertically and horizontally, it is possible to induce heavy loads. In the case of two bearings, alignment is not as critical, especially with Unisphere II bearings. These bearings are designed to allow a maximum of +/-1 degree of static and dynamic misalignment. However, for optimum seal performance, misalignment should be kept under +/-0.5 degree. To ensure good alignment, mounting surfaces must be checked for flatness and must lie in the same plane. When tightening base bolts, each bolt should be alternately tightened in incremental torque values until full torque is achieved to prevent the angular shifting of the pillow block that occurs when one bolt is tightened to its full torque. Shimming may be required to minimize misalignment.

Unisphere II

Table 1: Unisphere II spherical roller bearings and thrust factors

Shaft size (in)	Bearing series	e	$F_A/F_R \leq e$		$F_A/F_R > e$		Max. allowable slip fit radial load F_R* lbs	Dynamic capacity (C) lbs	Static capacity (C_0) lbs	Maximum rpm
			X	Y	X	Y				
1-1/8	22208	0.28	1	2.4	0.67	3.6	3,750	20,800	21,000	3,000
1-3/16										
1-1/4										
1-3/8										
1-7/16										
1-1/2										
1-5/8	22209	0.26	1	2.6	0.67	3.9	3,750	20,800	22,000	2,800
1-11/16										
1-3/4										
1-7/8	22210	0.24	1	2.8	0.67	4.2	4,000	22,000	24,000	2,625
1-15/16										
2										
2-3/16	22211	0.23	1	2.9	0.67	4.3	4,860	27,000	29,000	2,325
2-1/4										
2-3/8	22213	0.24	1	2.8	0.67	4.2	6,840	39,000	47,500	1,900
2-7/16										
2-1/2										
2-11/16	22215	0.22	1	3.1	0.67	4.6	7,500	41,500	53,000	1,700
2-3/4										
2-15/16										
3										
3-3/16	22218	0.23	1	2.9	0.67	4.3	11,500	65,500	81,500	1,400
3-1/4										
3-7/16										
3-1/2										
3-11/16	22220	0.24	1	2.8	0.67	4.2	14,400	83,000	104,000	1,250
3-15/16										
4										

* If load exceeds the maximum allowable slip fit load, line-to-line to light press fit of shaft required. Maximum slip fit radial loads apply if recommended shaft sizes are used.

Unisphere II

Table 2: Easy selection table for Unisphere II spherical roller bearings

Shaft size (in)	L_{10} life hours	Allowable equivalent radial load rating (lbs) at various revolutions per minute														
		50	100	150	250	500	870	1020	1250	1400	1700	1900	2325	2625	2800	3000
1-3/8—1-1/2	10,000	7498	6090	5393	4626	3758	3182	3034	2855	2759	2603	2518	2370	2285	2241	2195
	30,000	5393	4380	3878	3327	2703	2289	2182	2053	1984	1872	1811	1704	1643	1612	1579
	40,000	4947	4018	3558	3052	2479	2100	2002	1883	1820	1717	1661	1563	1508	1479	1448
	60,000	4380	3558	3150	2703	2195	1859	1773	1668	1612	1521	1471	1384	1335	1309	1282
	100,000	3758	3052	2703	2319	1883	1595	1521	1431	1383	1305	1262	1188	1145	1123	1100
1-11/16—1-3/4	10,000	7498	6090	5393	4626	3758	3182	3034	2855	2759	2603	2518	2370	2285	2241	2195
	30,000	5393	4380	3878	3327	2703	2289	2182	2053	1984	1872	1811	1704	1643	1612	1579
	40,000	4947	4018	3558	3052	2479	2100	2002	1883	1820	1717	1661	1563	1508	1479	1448
	60,000	4380	3558	3150	2703	2195	1859	1773	1668	1612	1521	1471	1384	1335	1309	1282
	100,000	3758	3052	2703	2319	1883	1595	1521	1431	1383	1305	1262	1188	1145	1123	1100
1-15/16—2	10,000	7930	6441	5704	4893	3975	3366	3209	3019	2918	2753	2663	2506	2417	—	—
	30,000	5704	4633	4102	3519	2859	2421	2308	2172	2099	1980	1915	1803	1738	—	—
	40,000	5232	4250	3763	3228	2622	2221	2117	1992	1925	1817	1757	1654	1595	—	—
	60,000	4633	3763	3332	2859	2322	1966	1875	1764	1705	1608	1556	1464	1412	—	—
	100,000	3975	3228	2859	2452	1992	1687	1608	1513	1463	1380	1335	1256	1211	—	—
2-3/16	10,000	9733	7905	7000	6005	4878	4131	3939	3706	3582	3379	3268	3076	—	—	—
	30,000	7000	5686	5035	4319	3508	2971	2833	2665	2576	2430	2350	2212	—	—	—
	40,000	6421	5216	4618	3962	3218	2726	2599	2445	2363	2229	2156	2029	—	—	—
	60,000	5686	4618	4089	3508	2850	2413	2301	2165	2092	1974	1909	1797	—	—	—
	100,000	4878	3962	3508	3010	2445	2070	1974	1857	1795	1694	1638	1542	—	—	—
2-7/16 2-1/2	10,000	14058	11419	10111	8674	7046	5967	5689	5352	5173	4881	4721	—	—	—	—
	30,000	10111	8213	7272	6239	5068	4292	4092	3850	3721	3510	3395	—	—	—	—
	40,000	9275	7534	6671	5723	4649	3937	3753	3531	3413	3220	3114	—	—	—	—
	60,000	8213	6671	5907	5068	4116	3486	3324	3127	3022	2851	2758	—	—	—	—
	100,000	7046	5723	5068	4348	3531	2991	2851	2683	2593	2446	2366	—	—	—	—
2-11/16—3	10,000	14959	12151	10759	9230	7497	6350	6054	5696	5505	5194	—	—	—	—	—
	30,000	10759	8739	7738	6639	5392	4567	4354	4096	3959	3735	—	—	—	—	—
	40,000	9870	8017	7098	6090	4946	4189	3994	3758	3632	3427	—	—	—	—	—
	60,000	8739	7098	6285	5392	4380	3709	3537	3327	3216	3034	—	—	—	—	—
	100,000	7497	6090	5392	4626	3758	3182	3034	2855	2759	2603	—	—	—	—	—
3-7/16—3-1/2	10,000	23611	19178	16981	14569	11833	10022	9555	8989	8689	—	—	—	—	—	—
	30,000	16981	13793	12213	10478	8511	7208	6872	6465	6249	—	—	—	—	—	—
	40,000	15577	12653	11203	9612	7807	6612	6304	5931	5732	—	—	—	—	—	—
	60,000	13793	11203	9920	8511	6913	5855	5582	5251	5076	—	—	—	—	—	—
	100,000	11833	9612	8511	7302	5931	5023	4789	4505	4355	—	—	—	—	—	—
3-15/16—4	10,000	29919	24302	21518	18461	14995	12699	12108	11391	—	—	—	—	—	—	—
	30,000	21518	17478	15476	13278	10785	9134	8708	8193	—	—	—	—	—	—	—
	40,000	19739	16033	14197	12180	9893	8378	7988	7515	—	—	—	—	—	—	—
	60,000	17478	14197	12571	10785	8760	7419	7073	6,655	—	—	—	—	—	—	—
	100,000	14995	12180	10785	9252	7515	6365	6068	5709	—	—	—	—	—	—	—

In the light shaded area, a line-to-line to light press fit on the shaft is required.

Unisphere II

Table 3: Unisphere II maximum axial expansion

Bore size (in)	Maximum expansion (in)
1-7/16—1-1/2	5/32
1-11/16—1-3/4	5/32
1-15/16—2	5/32
2-3/16	5/32
2-7/16—2-1/2	3/16
2-11/16—3	3/16
3-7/16—3-1/2	3/16
3-15/16—4	7/32

Table 4: Definition of operating conditions for unitized spherical roller bearings

Low speed	Up to 20% of maximum rpm (Table 1)
Medium speed	Over 20% to 80% of maximum rpm
High speed	Over 80% of maximum rpm
Light load	Up to 8% of C (Table 1)
Normal load	Over 8% to 18% of C
Heavy load	Over 18% of C C = Dynamic capacity
Low temperature	-20 °F to -100 °F
Medium temperature	Over 20 °F to 200 °F
High temperature	Over 200 °F to 400 °F

Unisphere II

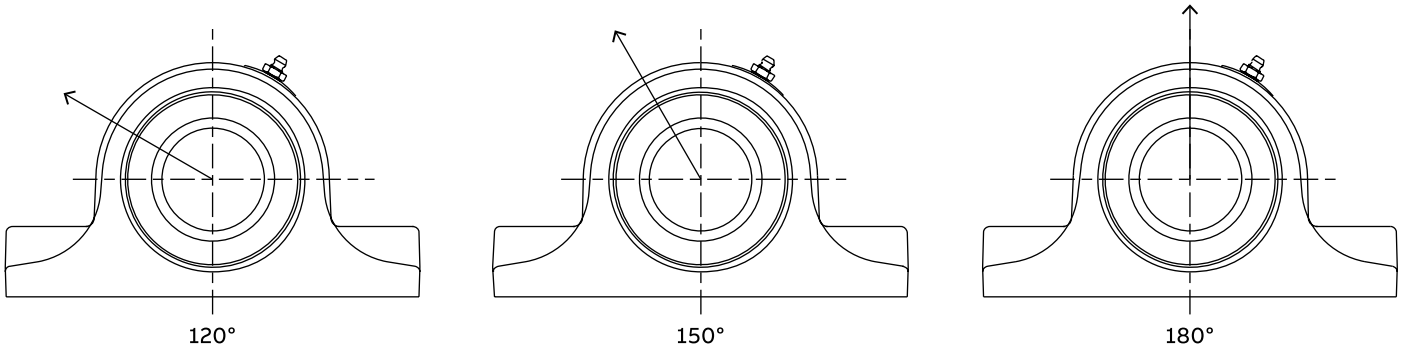

Table 5: Unisphere II housing ratings, ductile *

Bore sizes (in)	Pillow block designation	Maximum recommended housing cap loads		
		P120 lb	P150 lb	P180 lb
1-1/8—1-1/2	UN2107	5500	6750	8000
1-5/8—1-3/4	UN2111	6800	8600	10000
1-7/8—2	UN2115	8000	9900	11700
2-3/16—2-1/4	UN2203	10200	12500	14800
2-3/8—2-1/2	UN2207	10200	12400	14900
2-11/16—3	UN2215	12900	15900	18900
3-3/16—3-1/2	UN2307	11900	14600	17400
3-11/16—4	UN2315	16900	20800	24600

* When utilizing heavy cap loads on pillow block housings, the installation must adhere to the following procedures:

(1) The pillow block base bolts must be of high strength (Grade 8) bolts and properly tightened to mounting structure.

(2) Stop bars (shear strips) should be used against the plummer block where side loads are encountered.

(3) In all cases where loads are heavy, the L_{10} life of the bearing should be checked for proper selection and life requirements.

Dimensions

Unisphere II pillow block – inch

2-bolt

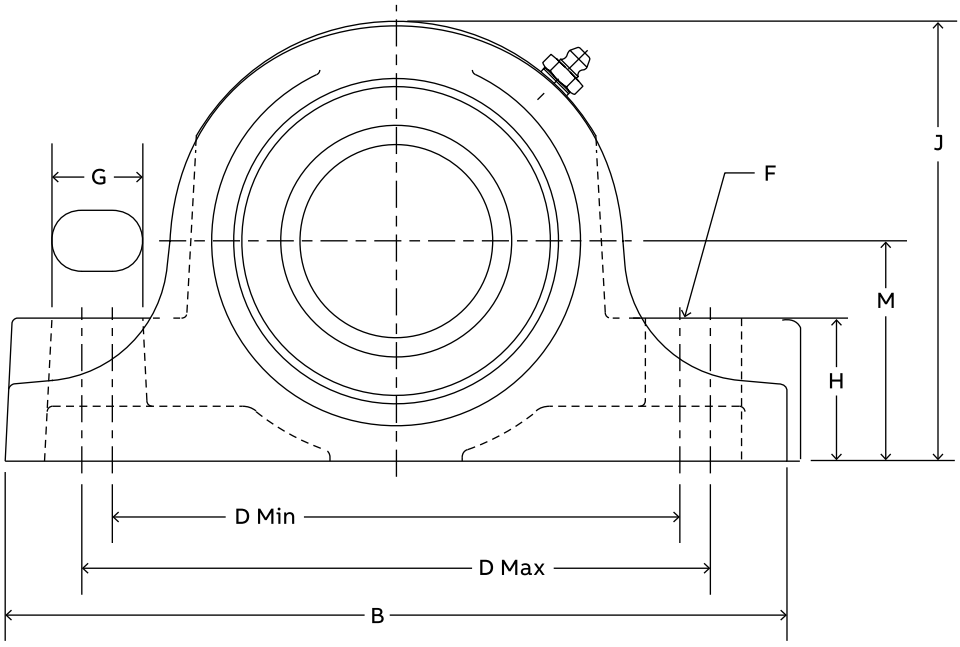

Note: All sizes use a 1/8-27 NPT hydraulic grease fitting

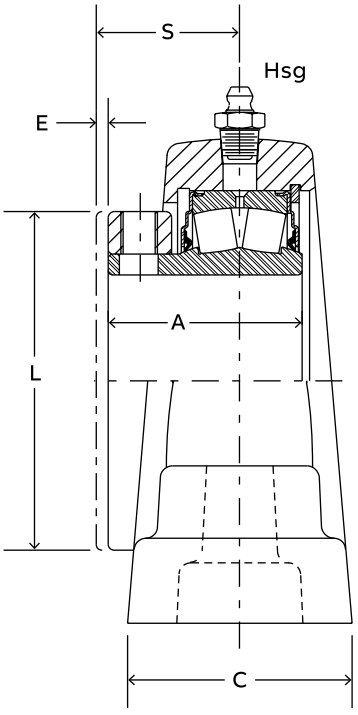

Expansion

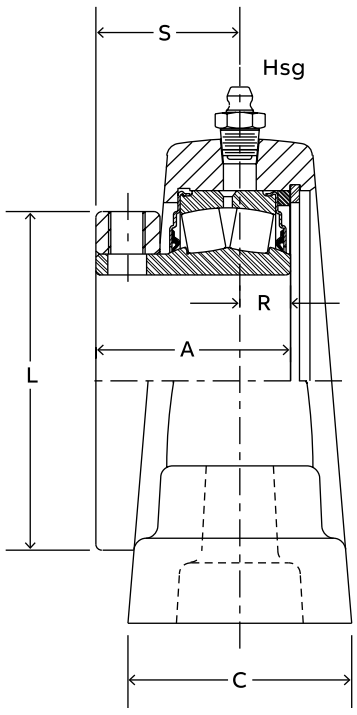

Non-Expansion

Unisphere II pillow block – inch

2-bolt

Bearing series	Shaft size	Non-expansion		Expansion		Approx. weight (lbs)
		Part number	Description	Part number	Description	
22208	1-7/16	048000	P2B-UN2-107	048017	P2B-UN2-107E	5.5
	1-1/2	048001	P2B-UN2-108	048018	P2B-UN2-108E	5.4
22209	1-11/16	048002	P2B-UN2-111	048019	P2B-UN2-111E	6.9
	1-3/4	048003	P2B-UN2-112	048020	P2B-UN2-112E	6.8
22210	1-15/16	048004	P2B-UN2-115	048021	P2B-UN2-115E	8.0
	2	048005	P2B-UN2-200	048022	P2B-UN2-200E	7.6
22211	2-3/16	048006	P2B-UN2-203	048023	P2B-UN2-203E	9.8
22213	2-7/16	048007	P2B-UN2-207	048024	P2B-UN2-207E	13.6
	2-1/2	048008	P2B-UN2-208	048025	P2B-UN2-208E	13.4
22215	2-11/16	048009	P2B-UN2-211	048026	P2B-UN2-211E	19.3
	2-3/4	048010 †	P2B-UN2-212	048027 †	P2B-UN2-212E	19.0
	2-15/16	048011	P2B-UN2-215	048028	P2B-UN2-215E	18.2
	3	048012	P2B-UN2-300	048029	P2B-UN2-300E	18.1
22218	3-7/16	048013	P2B-UN2-307	048030	P2B-UN2-307E	28.4
	3-1/2	048014 †	P2B-UN2-308	048031 †	P2B-UN2-308E	27.0
22220	3-15/16	048015	P2B-UN2-315	048032	P2B-UN2-315E	37.4
	4	048016 †	P2B-UN2-400	048033 †	P2B-UN2-400E	37.0

† Assembled to order. Consult customer support for delivery.

Shaft size	A	B	C	D		E total exp.	F bolt dia.	G	H	J	L	M	R	S
				Min.	Max.									
1-7/16 1-1/2	1.69	6.88	1.95	4.69	5.50	5/32	1/2	0.97	0.97	3.88	2.75	1.88	0.50	1.19
1-11/16 1-3/4	1.91	7.38	2.06	5.19	5.88	5/32	1/2	0.91	1.31	4.25	3.00	2.13	0.47	1.44
1-15/16 2	1.91	8.38	2.06	5.94	6.69	5/32	5/8	1.06	1.38	4.56	3.25	2.25	0.47	1.44
2-3/16	2.00	8.88	2.31	6.44	7.13	5/32	5/8	1.03	1.63	5.00	3.50	2.50	0.52	1.48
2-7/16 2-1/2	2.20	9.25	2.56	6.81	7.44	3/16	5/8	1.00	1.75	5.69	4.06	2.75	0.66	1.55
2-11/16 2-3/4 2-15/16 3	2.45	10.44	2.56	7.81	8.44	3/16	3/4	1.13	2.25	6.44	4.72	3.25	0.77	1.69
3-7/16 3-1/2	2.86	13.00	2.81	9.25	10.75	3/16	7/8	1.69	2.25	7.50	5.50	3.75	0.94	1.91
3-15/16 4	3.33	14.25	3.31	10.00	11.88	7/32	1	2.00	2.50	8.44	6.47	4.13	1.13	2.19

Note: Dimensions shown are for non-expansion units. The expansion bearing center and housing center are on the same centerline.

Unisphere II flange – inch

4-bolt

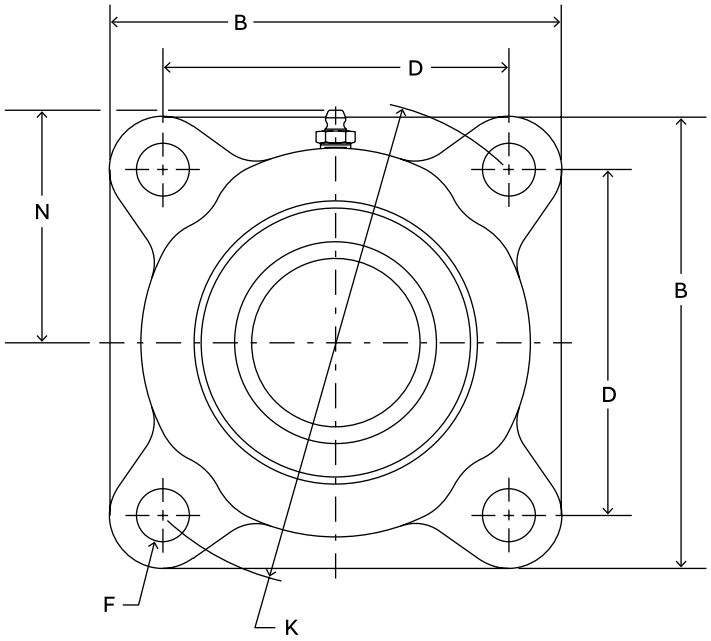

Note: All sizes use a 1/8-27 NPT hydraulic grease fitting

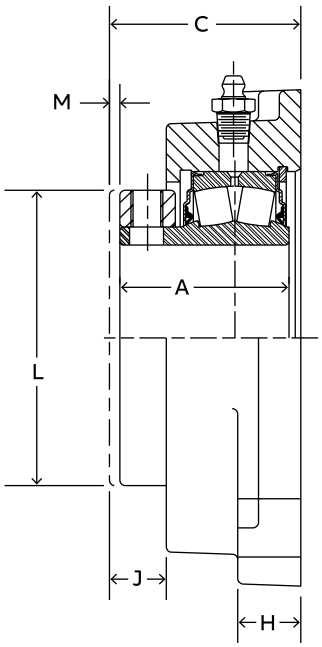

Expansion

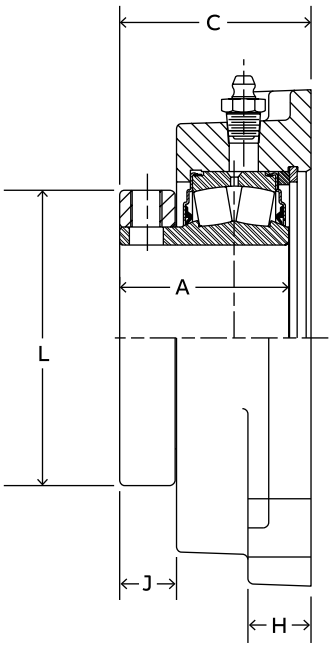

Non-Expansion

Unisphere II flange – inch

4-bolt

Bearing series	Shaft size	Non-expansion		Expansion		Approx. weight (lbs)
		Part number	Description	Part number	Description	
22208	1-7/16	048034	F4B-UN2-107	048051	F4B-UN2-107E	5.20
	1-1/2	048035	F4B-UN2-108	048052	F4B-UN2-108E	5.10
22209	1-11/16	048036	F4B-UN2-111	048053	F4B-UN2-111E	6.70
	1-3/4	048037	F4B-UN2-112	048054	F4B-UN2-112E	6.70
22210	1-15/16	048038	F4B-UN2-115	048055	F4B-UN2-115E	6.90
	2	048039	F4B-UN2-200	048056	F4B-UN2-200E	6.70
22211	2-3/16	048040	F4B-UN2-203	048057	F4B-UN2-203E	8.40
22213	2-7/16	048041	F4B-UN2-207	048058	F4B-UN2-207E	10.50
	2-1/2	048042	F4B-UN2-208	048059	F4B-UN2-208E	10.40
22215	2-11/16	048043	F4B-UN2-211	048060 †	F4B-UN2-211E	17.30
	2-3/4	048044	F4B-UN2-212	048061 †	F4B-UN2-212E	17.00
	2-15/16	048045	F4B-UN2-215	048062	F4B-UN2-215E	16.20
	3	048046	F4B-UN2-300	048063	F4B-UN2-300E	15.90
22218	3-7/16	048047	F4B-UN2-307	048064	F4B-UN2-307E	24.70
	3-1/2	048048 †	F4B-UN2-308	048065 †	F4B-UN2-308E	30.00
22220	3-15/16	048049	F4B-UN2-315	048066	F4B-UN2-315E	41.40
	4	048050	F4B-UN2-400	048067 †	F4B-UN2-400E	41.00

† Assembled to order. Consult customer support for delivery.

Shaft size	A	B	C	D	F bolt dia.	H	J	K	L	M total exp.	N
1-7/16 1-1/2	1.69	4.75	1.91	3.53	1/2	0.75	0.56	5.00	2.75	5/32	2.44
1-11/16 1-3/4	1.91	5.13	2.16	3.91	1/2	0.75	0.72	5.50	3.00	5/32	2.75
1-15/16 2	1.91	5.31	2.17	4.06	1/2	0.69	0.70	5.75	3.25	5/32	2.88
2-3/16	2.00	5.88	2.27	4.50	5/8	0.75	0.67	6.38	3.50	5/32	3.06
2-7/16 2-1/2	2.20	6.13	2.44	4.78	5/8	1.00	0.63	6.75	4.06	3/16	3.38
2-11/16 2-3/4 2-15/16 3	2.45	7.19	2.59	5.56	3/4	0.94	0.78	7.88	4.72	3/16	3.81
3-7/16 3-1/2	2.86	8.34	3.08	6.72	3/4	1.19	0.86	9.50	5.50	3/16	4.31
3-15/16 4	3.33	9.47	3.69	7.63	7/8	1.06	1.05	10.75	6.47	7/32	4.69

Note: Dimensions shown are for non-expansion units. The expansion bearing center and housing center are on the same centerline.

Unisphere II bearing insert with seal – inch

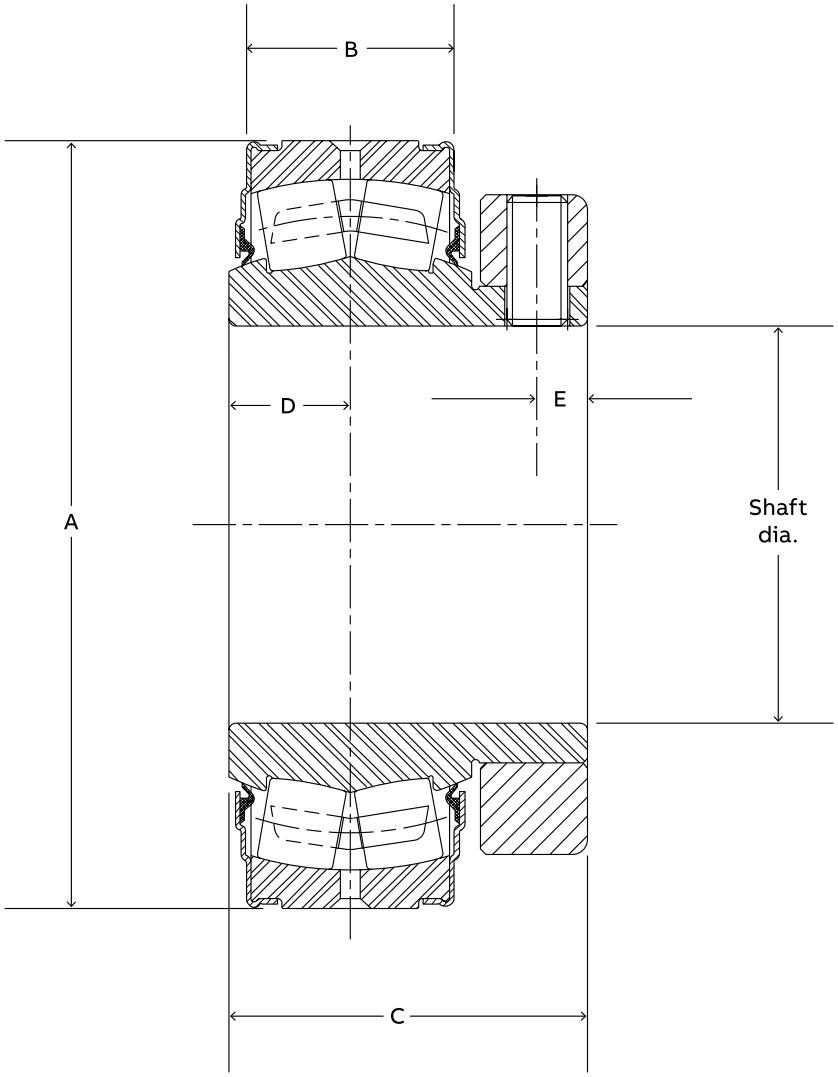

Unisphere II bearing insert with seal – inch

Bearing series	Shaft size	Part number †	Description	Approx. weight (lbs)
22208	1-7/16	421243	BRG-UN2-107	1.5
	1-1/2	421244	BRG-UN2-108	1.4
22209	1-11/16	421245	BRG-UN2-111	1.6
	1-3/4	421246	BRG-UN2-112	1.5
22210	1-15/16	421247	BRG-UN2-115	1.8
	2	421248	BRG-UN2-200	1.7
22211	2-3/16	421249	BRG-UN2-203	2.3
22213	2-7/16	421250	BRG-UN2-207	4.1
	2-1/2	421251	BRG-UN2-208	3.9
22215	2-11/16	421252	BRG-UN2-211	5.6
	2-3/4	421253	BRG-UN2-212	5.4
	2-15/16	421254	BRG-UN2-215	4.8
	3	421255	BRG-UN2-300	4.6
22218	3-7/16	421256	BRG-UN2-307	9.2
	3-1/2	421257	BRG-UN2-308	8.6
22220	3-15/16	421258	BRG-UN2-315	12.4
	4	421259	BRG-UN2-400	12.1

† Assembled-to-order size. Consult customer support for delivery.

Shaft size	A	B	C	D	E
1-7/16	3.1496	0.95	1.69	0.56	0.29
1-1/2					
1-11/16	3.3465	0.95	1.91	0.58	0.32
1-3/4					
1-15/16	3.5433	0.95	1.91	0.59	0.32
2					
2-3/16	3.9370	1.03	2.00	0.64	0.32
2-7/16	4.7244	1.27	2.20	0.75	0.32
2-1/2					
2-11/16	5.1181	1.27	2.45	0.80	0.44
2-3/4					
2-15/16					
3					
3-7/16	6.2992	1.62	2.86	0.95	0.44
3-1/2					
3-15/16	7.0866	1.86	3.33	1.09	0.51
4					

Notes

Sleevoil (hydrodynamic)

B26-1	**Sleevoil (hydrodynamic)**
B26-2	**Features and benefits**
B26-5	**Specification**
B26-7	**How to order**
B26-7	**Nomenclature**
B26-8	**Selection**
B26-10	**Dimensions**
B26-10	Sleevoil RTL
B26-12	Sleevoil R
B26-20	**Accessories**

Features and benefits

Sleevoil

R series pillow block

Though originally designed for the exacting requirements of the air handling industry, Sleevoil pillow blocks are suitable for a wide range of industrial applications requiring a precision-built, split-housed, babbitted, ring-oiled, self-aligning, and operationally quiet bearing.

Sleevoil pillow blocks have good cooling capabilities. Water-cooled (WC) and externally-cooled (XC) types operate at higher speeds and load ranges than plain units and function well near high temperature sources.

For standard Sleevoil bearings, the shaft tolerance is +0.000" / -0.002" with a surface finish of 32 micro-inches or better.



R series pillow block

Common applications

- Fans and blowers
- Generators
- Test stands
- Pumps
- Motors
- Dynamometers
- Compressors
- Turbines

Key features

- Fully-split housing for trouble-free assembly and disassembly
- Rugged construction using gray iron housing and liner for durability
- Babbitt lining offers conformability and shaft protection
- Completely self-aligning as a result of ball and socket mounting between liner and base
- Dependable oil ring lubrication with self-contained oil supply
- Convenient oil gage can be positioned on either side of housing
- Proven reliability and dependable performance guard against catastrophic failures
- Extended life with no metal-to-metal contact during operation—more than ten times the theoretical life of anti-friction bearings
- High-speed capabilities due to self-pressurized full oil film
- Adequate vibration dampening is handled by the hydrodynamic oil film which absorbs shock
- Effective heat transfer accomplished by journal surrounded by improved coolant chambers
- Quiet operation due to full separation of mating parts

Sleevoil

RTL series pillow block

RTL pillow block blocks offer excellent radial and thrust load capacities. Large coolant chambers provide especially effective heat dissipation when used with circulating coolant systems. This provides exceptionally strong bearing performance near high-heat sources or gases.

The inner liner of Sleevoil RTL has a center cavity which provides flooding lubrication to the thrust plates. This cavity acts as a reservoir to provide lubrication even during start-up and divides the radial area into two individual load sections. A single thrust collar is required. If a split collar is used, a shaft recess is necessary.

Coolant chambers, which cool both the thrust plates and radial load sections, are of sufficient size to allow the use of water, air, or oil as the internal coolant.

Expansion pillow blocks are furnished as standard. When non-expansion blocks are specified, a thrust collar and thrust plate kit are required.



RTL series pillow block

Key features

- Reliable, high-speed operation
- Three times the thrust load capability of the R series
- Suitable for operation near high-heat sources
- Pre-machined for thermocouples, circulating oil kit, vibration detector adapter kit, auxiliary seal kits, end cap kit, proximity probes, heater and thermostat

Sleevoil

Bearing isolator, R and RTL series

The Sleevoil bearing isolator is a fully split, multi-labyrinth contact sealing system. The stator forms a complex labyrinth with the rotor to isolate the bearing from contamination keeping the lubricating oil clean. The tortuous labyrinth path between the stator and rotor also contains internal non-metallic seals to limit direct penetration of liquid or particulate.

The Sleevoil isolator is IP56 rated and all seal components including rotor stator and O-rings are fully split for ease of assembly and disassembly.

O-rings in the bore of the rotor provide sealing along the shaft and allow for axial shaft expansion as needed.

The isolator seal is designed to retrofit an existing Sleevoil housing with dovetail grooves on either end.



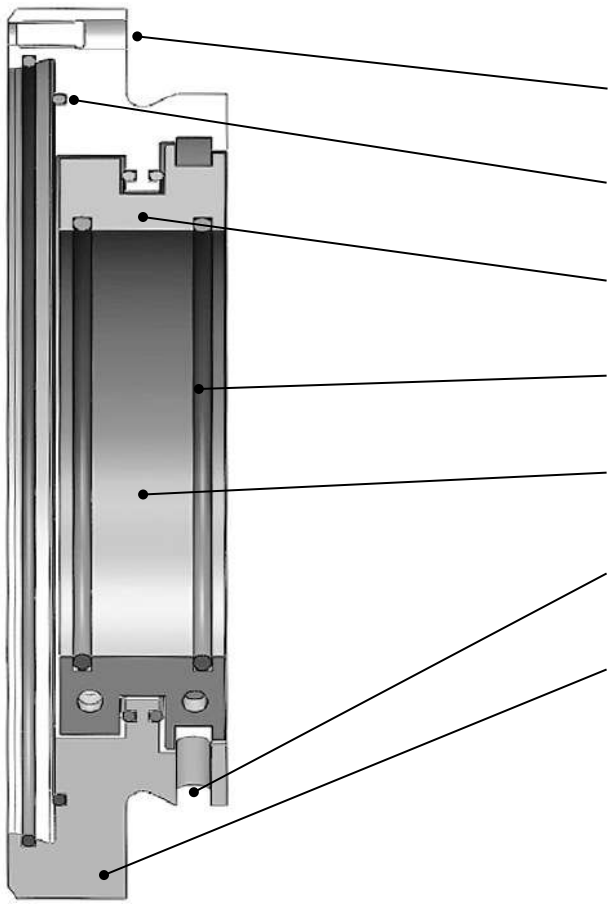

01 Set screw provices additional clamping to the housing

02 Housing O-ring seals

03 Rotor locating seals

04 Shaft O-ring seals

05 Seal rotor

06 Expulsion port expels contaminants from seals

07 Seal stator

Specification

Sleevoil

R series pillow block

- 1-7/16 inch bore stocked as plain pillow block
- 1-11/16 inch to 3-7/16 inch bore sizes stocked as plain/water-cooled (PLWC) pillow blocks
- 3-15/16 inch to 8 inch bore size stocked as plain/externally-cooled (PLXC) pillow blocks, standard and short series
- PLXC liner only



PLXC liner assembly
Plain – externally cooled



PLWC pillow block
Plain – water cooled



STL
Standard



SSL
Short series

Note: Water-cooled replacement liners (WC Repl) are also available for housings made prior to 1973 with smaller coolant pipes.

Sleevoil

R series pillow block

- R series jacketed liners designated as XC can be air-, oil-, or water-cooled
- Thrust collars convert the expansion bearing into a non-expansion bearing
- Short series housings require less shaft space and are for expansion bearings only
- Housings for bore sizes 3-7/16 inch and greater are pre-machined for thermocouples, heaters, thermostats, vibration detector adapter kits, auxiliary seal kits, end cap kits, and circulating oil kits
- 3-15/16 inch to 8 inch water-cooled replacement (WC repl) liners have small pipes and fit in the R series housings
- PLXC liners require R series housings and will not fit in WC housings from before 1973



Plain pillow block

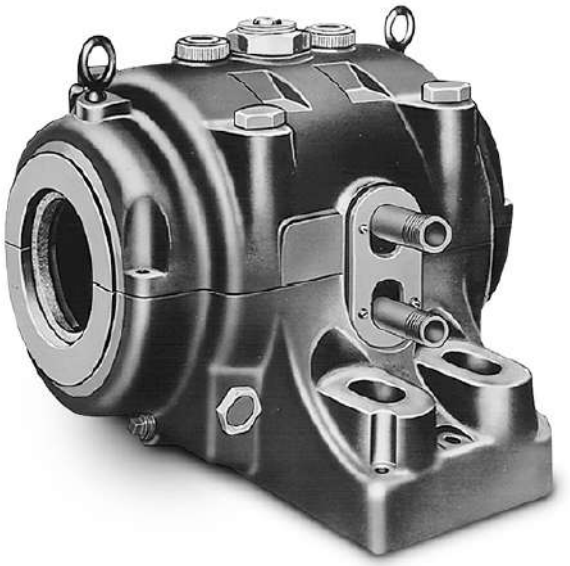

XC pillow block

How to order

Sleevoil

R and RTL series

There are two ways to specify Dodge bearings—by six-digit part number or by description. Most of the products offered have part numbers with listings shown throughout this catalog. Use of part numbers ensures accurate order processing.

When part numbers are not shown, the product may be specified by description. This method is used when ordering units that include modifications or options. To order by description, use the nomenclature key shown for each product, adding any special instructions to the end of the description for options not covered by the nomenclature.

Other special requirements not listed

For applications requiring modifications not listed, contact Application Engineering for bearings at +1 864 284 5700.

Nomenclature

Common

PB = Pillow block
HSG = Housing
LNR = Liner assembly
TC = Thrust collar
TPK = Thrust plate kit
BTP = Bronze thrust plates
(BTP1-Type 1 lower liner only;
BTP2-Type 2 upper and lower liner)

R

STD = Standard series
PLWC = Plain – water cooled
SSL = Short series loaded
STL = Standard series loaded
SSH = Short series
XC = Externally cooled
WC = Water cooled

RTL

RTL = Radial thrust loaded
RTL spherical = Radial thrust loaded spherical

The product offering has 6-digit part numbers with listing shown throughout this catalog.
Use of part numbers ensures accurate order processing.

Selection

Sleevoil application inquiry form

Application engineering:
engineering@support.dodgeindustrial.com
+1 864 284 5700, option 4

Company name _____ Date _____

Address _____ Response is required by _____

Contact name _____ Phone ( ) _____

Customer reference _____ Email: _____

Installation and arrangement _____

Shaft speed:
- ☐ Constant _____ Rpm
- ☐ Variable speed – Max rpm _____ Min rpm
- ☐ Turning gear _____

	Fixed bearing (non-expansion)	**Free bearing (expansion)**
Shaft size (in.):		
Radial load (lbs., N):		
Thrust load: (lbs., N):		N/A
Cooling wheel:	☐ Yes ☐ No	☐ Yes ☐ No
Bearing type:	☐ RTL ☐ STL	☐ RTL ☐ STL ☐ SSL
Loading:	☐ Base ☐ Cap	☐ Base ☐ Cap

Type of coolant: ☐ Plain (none) ☐ Water ☐ Air ☐ Circulating oil ☐ Water cooled with circ. oil

Preferred lubricant: ☐ ISO 32 ☐ ISO 46 ☐ ISO 68 ☐ ISO 100 ☐ Other: _____

Sleevoil application inquiry form

Expected temperatures:

Ambient:	Max:	_____	°F / °C	Min:	_____ °F / °C
Air inlet:	Max:	_____	°F / °C	Min:	_____ °F / °C
Water inlet:	Max:	_____	°F / °C	Min:	_____ °F / °C
Oil Inet:	Max:	_____	°F / °C	Min:	_____ °F / °C

Air velocity over bearing housing (FPM): _____

Closest part of bearing to heat source: Non-expansion bearing: _____in., mm Expansion bearing: _____ in., mm

External heat source (fan gas temperature): _____ °F / °C

Please state any unusual conditions, such as: shock loads, changes in thrust loads, low speed requirements, hot shaft start-ups, environmental conditions (dust, chemicals, gasses, etc.):

_____

_____

_____

_____

Dimensions

Sleevoil RTL pillow block – inch

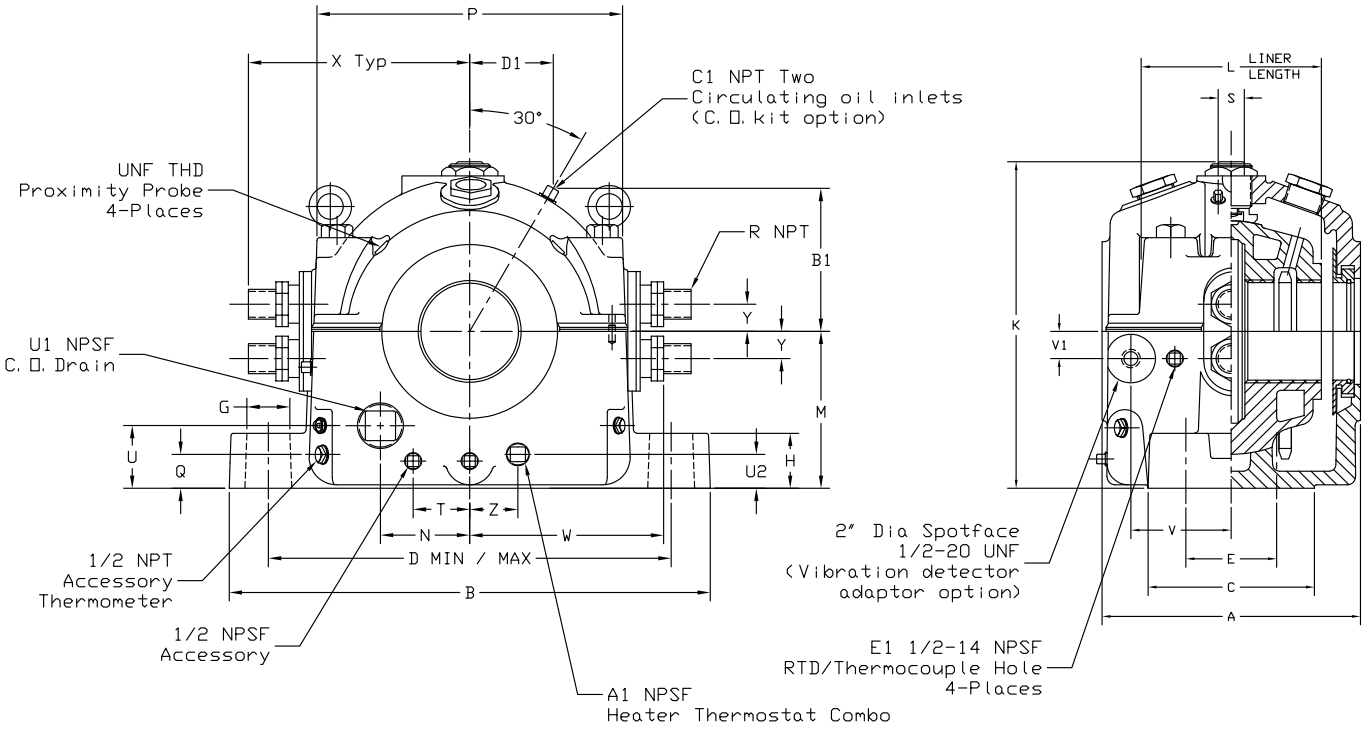

Shaft size	Expansion pillow blocks		One of each required to make a non-expansion pillow block				Auxiliary seal kits # #		Housing end cap kits		Heater/thermostat *	
			Thrust plate kits		Split thrust collar ⊗⊗							
	Part number	Weight	Part number	Weight	Part number	Weight	Part number	Weight	Part number	Weight	Part number	Weight
2-15/16	132447	190	137101	2.5	132151	2.6	132811	4.9	132542	5.3	434721	1.0
3-7/16	132474	190	137101	2.5	132151	2.6	132811	4.9	132542	5.3	434721	1.0
3-15/16	132475	230	137102	4.3	132152	4.2	432181	6.4	432190	6.1	434725	2.5
4-7/16	132476	300	137103	5.4	132153	5.6	432184	7.0	432193	6.8	434725	2.5
4-15/16	132477	425	137104	6.9	132154	8.7	432187	7.5	432196	7.3	434727	3.0
5-7/16	132383	500	137105	10.2	132155	10.8	133932	12.4	132546	11.6	434727	3.0
6	132384	825	137106	12.7	132156	15.9	133933	14.8	132547	10.6	434727	3.0
7	132385	978	137107	17.6	132157	22.4	133937	19.0	132548	13.5	434729	4.0
8	132386	1310	137108	23.1	132158	34.5	133938	24.9	132549	15.5	434729	4.0
9	132387	1650	137109	42.6	132159	45.9	132814	23.1	132564	15.9	434729	4.0
10	132388	2150	137110	52.7	132160	59.8	132816	24.2	132565	16.4	434729	4.0
12	132389	3500	137111	74.1	132161	96.4	132819	40.0	132566	25.0	434735	7.5

* 220 volt heaters available. See page B26-24.

⊗⊗ For recessed shaft.

Sleevoil RTL pillow block – inch

Shaft size	Circulating oil inlet kits >		Replacement liner assemblies		A	B	C	D (max.-min.)	E	F bolt dia.	F1	G	G1	H	H1	K
	Part number	Weight	Part number	Weight												
2-15/16	132203	2	132439	47	10	18-3/4	6	16-1/8 - 14-7/8	3	3/4	3/8 - 24 UNF	1-1/2	45°	2	5 - 1/16	12-9/16
3-7/16			132420	47	10	18-3/4	6	16-1/8 - 14-7/8	3	3/4	3/8 - 24 UNF	1-1/2	45°	2	5 - 1/16	12-9/16
3-15/16			132421	65	10-3/4	20-3/4	7	18 - 16-1/2	3-1/2	7/8	3/8 - 24 UNF	1-3/4	45°	2-1/4	5 - 9/16	13-5/8
4-7/16			132422	82	11-3/4	21-3/4	7-1/2	18-7/8 - 17-1/8	4	1	7/8 - 14 UNF	2	45°	2-1/2	5 - 5/8	15-1/4
4-15/16			132423	113	12-3/4	24-1/4	8-1/2	21-3/8 - 19-5/8	4-1/2	1	7/8 - 14 UNF	2	45°	2-3/4	6 - 11/16	17-3/8
5-7/16			132424	144	14	26-3/4	9-1/2	23-1/4 - 21-1/4	5	1-1/8	7/8 - 14 UNF	2-1/4	45°	3-1/4	7 - 1/8	18-7/8
6	132205	2	132425	182	16	29	10-1/2	25-1/8 - 22-7/8	5-1/2	1-1/4	7/8 - 14 UNF	2-1/2	45°	3-1/2	7 - 11/16	20-1/8
7			132426	257	18	33	12-1/2	28-7/8 - 26-1/8	6-1/2	1-1/2	7/8 - 14 UNF	3	45°	4	8 - 9/16	22-3/8
8			132427	412	19-3/4	38	14	33-1/8 - 29-7/8	7-1/2	1-3/4	7/8 - 14 UNF	3-1/2	15°	4-1/2	9 - 15/16	25-13/16
9			132428	623	22-3/4	41-1/2	15-1/2	36-5/8 - 33-3/8	8	1-3/4	7/8 - 14 UNF	3-1/2	15°	5	11 - 3/16	28-1/4
10			132429	955	24-1/2	47-1/2	17	41-7/8 - 38-1/8	9	2	7/8 - 14 UNF	4	15°	6	12 - 3/4	33-7/8
12			132430	1405	29	49	18	43-5/8 - 41-7/8	10	2	7/8 - 14 UNF	3	15°	6-1/2	14 - 1/4	37

Shaft size	L	M	N	P	Q	R	S	T	U	U1	U2
2-15/16	6-3/4	5-7/8	3-5/8	11-5/8	1-1/8	3/4	1-3/8	—	2-3/4	1-1/2	1-1/8
3-7/16	6-3/4	5-7/8	3-5/8	11-5/8	1-1/8	3/4	1-3/8	—	2-3/4	1-1/2	1-1/8
3-15/16	7-1/4	6-1/2	4-3/8	12-7/8	1-1/8	1	1-1/2	—	2-15/16	1-1/2	1-1/4
4-7/16	8	7	4-1/2	13-3/4	1-1/4	1	1-1/2	—	2-15/16	1-1/2	1-3/8
4-15/16	8-7/8	7-3/4	5-1/8	16	1-1/4	1-1/4	1-5/8	—	3-1/4	2	1-1/2
5-7/16	10	8-3/4	5-3/4	17-1/4	1-5/8	1-1/4	2	2-15/16	3-3/4	2	1-7/8
6	10-7/8	9-1/2	6-1/4	18-3/4	1-5/8	1-1/4	2-1/8	3-1/2	4	2	1-7/8
7	12-1/2	10-3/4	6-7/8	21-1/4	2	1-1/4	2-1/4	4	4-1/4	2	2
8	14-1/8	12-1/4	8-1/2	24-1/4	2-1/4	2	2-3/8	5-1/2	4-3/4	2	2-1/4
9	16-1/4	13-1/2	9-3/16	27-1/4	2-1/4	2	3	5-1/2	5-1/16	2	2-1/4
10	17-3/4	16	11	31	2-7/8	2-1/2	3-1/8	8-1/2	5-9/16	2-1/2	2-7/8
12	20-3/4	17-3/4	12-7/16	35-1/2	3-1/8	3	3-1/4	9	6-1/8	2-1/2	3-1/8

Shaft size	V	V1	W +/-3/16	X	Y	Z	A1	B1	C1	D1
2-15/16	3-1/4	3/4	7-5/8	8-3/4	1-1/4	3-9/16	3/4	7-1/4	1/4	4-3/16
3-7/16	3-1/4	3/4	7-5/8	8-3/4	1-1/4	3-9/16	3/4	7-1/4	1/4	4-3/16
3-15/16	3	1-1/2	8-11/16	9-13/16	1-1/4	4-1/16	1	7-11/16	1/4	4-9/16
4-7/16	3-1/4	1-5/8	9-1/8	10-1/4	1-1/4	4-7/16	1	8-1/8	1/4	4-5/8
4-15/16	3-3/4	1-3/4	10-3/4	12-7/16	1-7/8	5-3/8	1-1/4	8-1/2	1/4	4-15/16
5-7/16	4	1-3/4	11-7/16	12-7/8	1-7/8	5-5/8	1-1/4	9-1/16	1/4	5-1/4
6	3-3/4	2	12-3/16	13-1/2	1-7/8	6-1/8	1-1/4	10-7/8	3/8	6- 5/16
7	4-1/2	2	13-3/16	14-5/8	1-7/8	6-7/8	1-1/4	12-1/16	3/8	6-15/16
8	5	2	15-11/16	17-7/8	2-1/4	8-3/8	1-1/4	13-1/8	3/8	7-3/16
9	5-1/2	2	17-1/8	19-1/4	2-1/4	9-1/16	1-1/4	14-3/16	3/8	8-3/16
10	6	2	19-13/16	22-1/2	2-3/4	10-5/8	1-1/4	15-1/8	3/8	8-3/4
12	6-1/2	2	22	24-1/4	3-1/2	12-1/8	1-1/4	19-1/2	3/8	9-9/16

One required per pillow block end.

> One required per pillow block.

* 220 volt heaters available. See Page B26-24.

⊗⊗ Two required per shaft.

All sizes are pre-machined for accessories: thermocouples, circulating oil, vibration detector, heater and thermostat.

Sleevoil R pillow block – inch

Plain, water-cooled (PL-WC) - standard and short series

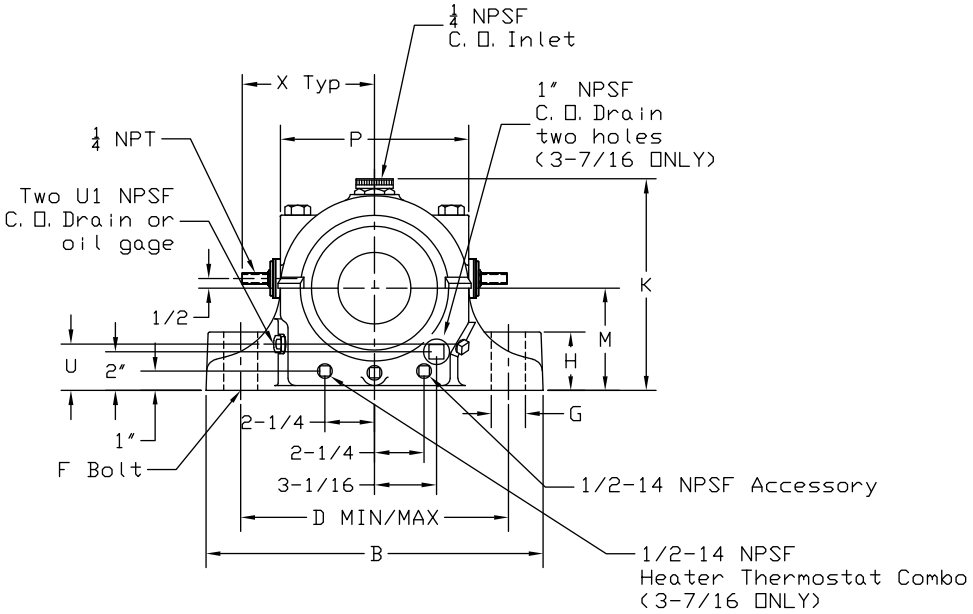

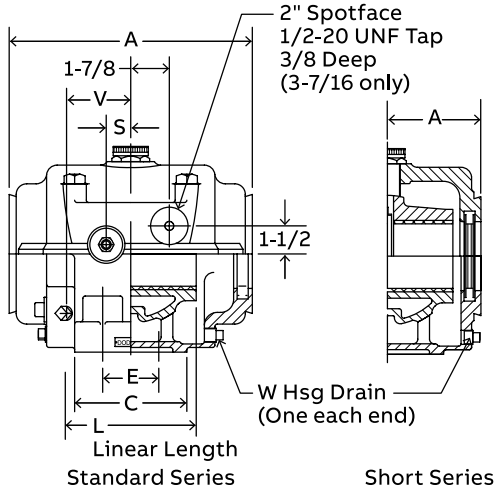

Shaft size	Expansion pillow blocks STD		Expansion pillow blocks SSH (Short series expansion only)		Split thrust collars 2 Collars required to make a non-expansion pillow blocks		Neoprene end closure **		Hose kits		Replacement PL-WC liner assemblies	
	Part number	Weight	Part number	Weight	Part number	Weight	Part number	Weight	Part number	Weight	Part number	Weight
1-7/16	132983	20.5	—	—	133245	0.7	133980	0.12			133203	3.6
1-11/16	132984	30.7	—	—	133250	1.2	133981	0.12			133583	6.3
1-15/16	132985	31.6	—	—	133255	1.0	133982	0.12			133584	7.0
2-3/16	132986	47.8	—	—	133260	1.8	133983	0.12			133585	12.0
2-7/16	132987	65.5	—	—	133265	2.7	133984	0.12	133344	0.5	133586	11.6
2-11/16	132988⊗	97.0	—	—	133270	4.1	133985	0.12			132959⊗	27.0
2-15/16	132989⊗	92.4	132991⊗	90.0	133275	3.8	133986	0.18			132950⊗	22.0
	STL		SSL									
3-7/16	132990 ⊗	144.0	132992 ⊗	138.0	133280	6.2	133987	0.31			132951⊗	50

⊗ Pillow block and liner are pre-drilled for thermocouple (2 places).

STL and SSL are pre-drilled for accessories: thermocouple, circulating oil, vibration detector, heater and thermostat.

Sleevoil R pillow block – inch

Plain, water-cooled (PL-WC) - standard and short series

Shaft size	A		B		C		D (Min.-Max.)						E		F bolt dia.		G	
	STD	SSH	STD	SSH	STD	SSH	STD			SSH			STD	SSH	STD	SSH	STD	SSH
1-7/16	6-1/2	—	9-1/2	—	2-3/4	—	7	—	7-1/2	—	—	—	##	—	5/8	—	1	—
1-11/16	7-3/4	—	10-1/2	—	3	—	7-3/4	—	8-1/4	—	—	—	##	—	5/8	—	1	—
1-15/16	7-3/4	—	10-1/2	—	3	—	7-3/4	—	8-1/4	—	—	—	##	—	5/8	—	1	—
2-3/16	9-1/4	—	12-1/2	—	3-1/2	—	9-1/8	—	9-7/8	—	—	—	##	—	3/4	—	1-1/4	—
2-7/16	10-1/2	—	13-1/2	—	4	—	10-1/8	—	10-7/8	—	—	—	##	—	3/4	—	1-1/4	—
2-11/16	11-1/2	—	15	—	4-1/2	—	11	—	12	—	—	—	##	—	7/8	—	1-1/2	—
2-15/16	11-1/2	8-3/4	15	15	4-1/2	5-3/4	11	—	12	10-7/8	—	12-1/8	##	2-3/4	7/8	3/4	1-1/2	1-1/2
	STL	SSL	STL	SSL	STL	SSL	STL			SSL			STL	SSL	STL	SSL	STL	SSL
3-7/16	13	10	17	17	6	6	12-15/16 - 14-1/16			12-15/16 - 14-1/16			3	3	3/4	3/4	1-1/2	1-1/2

Shaft size	H		K		L		M		P		S		U	
	STD	SSH	STD	SSH	STD	SSH	STD	SSH	STD	SSH	STD	SSH	STD	SSH
1-7/16	1-1/2	—	6	—	3	—	2-3/4	—	4-5/8	—	—	—	1-1/8	—
1-11/16	1-3/4	—	6-3/4	—	3-1/2	—	3-1/8	—	5-3/8	—	7/8	—	1-3/8	—
1-15/16	1-3/4	—	6-3/4	—	4	—	3-1/8	—	5-3/8	—	7/8	—	1-3/8	—
2-3/16	2	—	8	—	4-1/2	—	3-3/4	—	6-3/8	—	7/8	—	1-1/2	—
2-7/16	2-3/8	—	8-3/4	—	5	—	4-1/8	—	7-1/8	—	1-1/16	—	1-5/8	—
2-11/16	2-15/32	—	9-5/8	—	5-1/2	—	4-9/16	—	7-7/8	—	1-1/8	—	1-7/8	—
2-15/16	2-15/32	1-1/2	9-5/8	9-5/8	6	6	4-9/16	4-9/16	7-7/8	7-7/8	1-1/8	1-1/8	1-7/8	1-3/4
	STL	SSL	STL	SSL	STL	SSL	STL	SSL	STL	SSL	STL	SSL	STL	SSL
3-7/16	3	3	11	11	7	7	5-1/4	5-1/4	9-3/8	9-3/8	1-5/16	1-5/16	2	2

Shaft size	U1		V		W		X
	STD	SSH	STD	SSH	STD	SSH	
1-7/16	1/2	—	2-1/16	—	1/4	—	—
1-11/16	1/2	—	2-1/4	—	1/4	—	3-3/4
1-15/16	1/2	—	2-1/4	—	1/4	—	3-3/4
2-3/16	1/2	—	2-1/2	—	1/4	—	4-3/4
2-7/16	1/2	—	2-15/16	—	1/4	—	4-3/4
2-11/16	1/2	—	3-1/8	—	1/4	—	5-1/8
2-15/16	1/2	1/2	3-1/8	3-9/16	1/4	1/4	5-1/8
	STL	SSL	STL	SSL	STL	SSL	
3-7/16	3/4	1/2	3-7/8	3-7/8	1/2	1/2	5-1/2

2-bolt.

3-7/16 Heater (434719).

** Used to close one end of pillow block. One required for sizes 1-7/16 through 2-15/16.Two required for 3-7/16.

⊗ Pillow block and liner are pre-drilled for thermocouple (2 places).

STL and SSL are pre-drilled for accessories: thermocouple, circulating oil, vibration detector, heater and thermostat.

Sleevoil R pillow block – inch

Plain, externally cooled (PLXC) - standard and short series

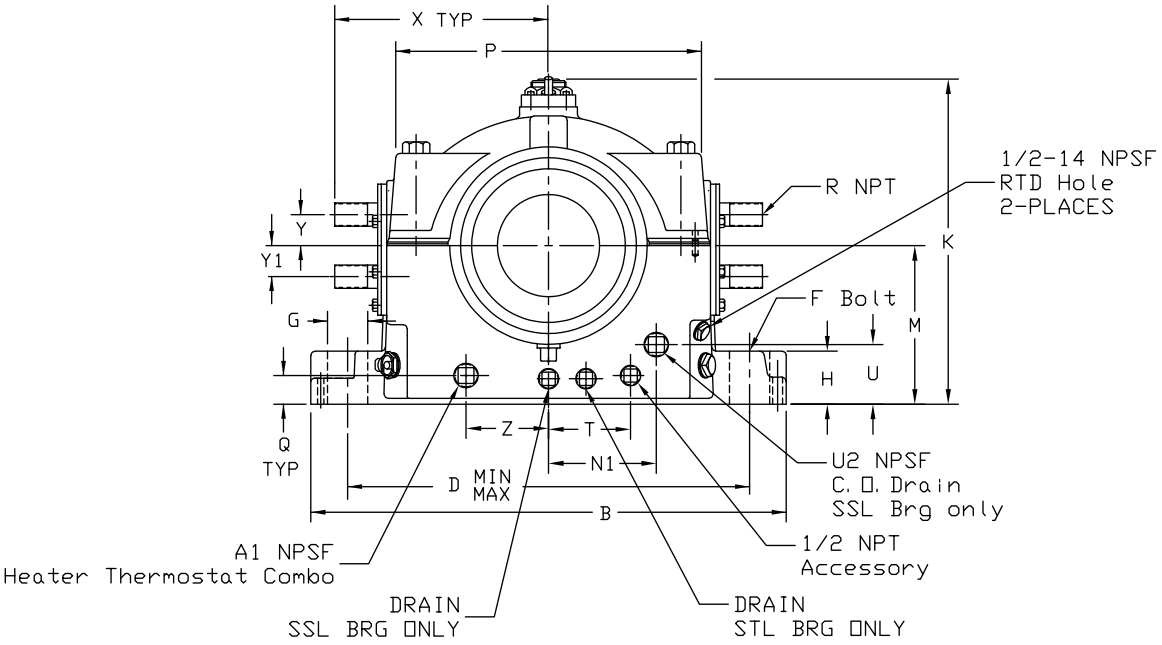

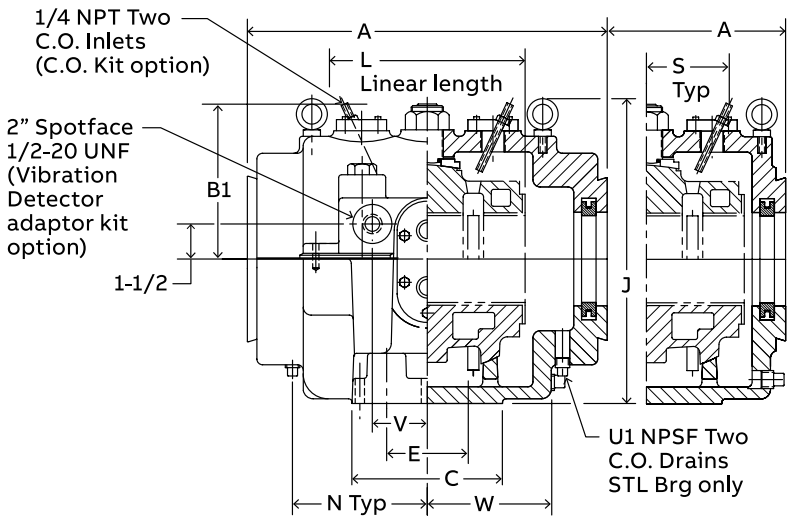

Standard Series Short Series

Shaft size	Expansion pillow blocks STL		Expansion pillow blocks SSL (Short series expansion only)		Split thrust collars 2 Collars required to make a non-expansion STL pillow blocks		Replacement liner assembllies PL-XC Externally cooled		WC ★ (Discontinued in 2022)	
	Part number	Weight	Part number	Weight	Part number	Weight	Part number	Weight	Part number	Weight
3-15/16	134200	201	134207	193	133285	7.2	132952	51	132952	51
4-7/16	134201	271	134208	255	133292	7.9	132953	71	132953	71
4-15/16	134202	362	134209	324	133293	11.3	132954	92	132954	92
5-7/16	134203	470	134210	462	133294	12.3	132955	130	132955	130
6	134204	598	134211	570	133295	15.3	132956	158	132956	158
7	134205	882	134212	845	133296	31.3	132957	230	132957	230
8	134206	1298	134213	1256	133297	48.7	132958	372	132958	372

★ If a WC liner is in place, the entire pillow block must be replaced with a PLXC pillow block.

Sleevoil R pillow block – inch

Plain, externally cooled (PLXC) - standard and short series

Shaft Size	Optional accessories											
	Auxiliary seal kits ##		Housing end cap kits		Heater / Thermostat * 120 Volt		Circulating oil inlet kits >		Neoprene end closures ⊗⊗		Pipe grommet kits >	
	Part number	Weight	Part number	Weight	Part number	Weight	Part number	Weight	Part number	Weight	Part number	Weight
3-15/16	432181	6.4	432190	6.1	434721	1.0	432153	2	133988	0.3	132192	1.6
4-7/16	432184	7.0	432193	6.8	434721	1.0	430198	2	133989	0.4	132192	1.6
4-15/16	432187	7.5	432196	7.3	434721	1.0	430198	2	133990	0.5	132193	2.4
5-7/16	133932	12.4	132546	11.6	434721	2.0	430155	2	133991	0.6	132193	2.4
6	133933	14.8	132547	10.6	434725	2.5	430155	2	133992	0.8	132198	3.6
7	133937	19.0	132548	13.5	434725	2.5	430155	2	133993	1.2	132198	3.6
8	133938	24.9	132549	15.5	434727	3.0	430155	2	133994	1.3	132198	3.6

Shaft size	A		B	C	D (Min.-Max.)	E	F bolt dia.	G	H		J	
	STL	SSL							STL	SSL	STL	SSL
3-15/16	15	11	19	7	14-1/4 - 15-3/4	3-1/2	7/8	1-3/4	3	2	12-1/16	12-5/8
4-7/16	16-1/2	12-1/2	20-1/2	7-1/2	15-1/4 - 16-3/4	4	1	2	3-1/2	3-1/2	14-5/8	14-5/8
4-15/16	18-1/4	13-3/4	22-1/2	8-1/2	16-5/8 - 18-7/8	4-1/2	1	**	3-1/8	2-1/2	15-7/8	15-7/8
5-7/16	19-3/4	15-1/4	24-1/2	9-1/2	18-1/4 - 20-1/4	5	1-1/8	2-1/4	3-3/4	2-3/4	17-1/8	17-1/8
6	21-1/4	16-1/4	26	10-1/2	19-5/8 - 21-7/8	5-1/2	1-1/4	2-1/2	4	3	17-5/8	18-1/2
7	24-1/2	18-3/4	29-3/4	12-1/2	22-5/8 - 25-3/8	6-1/2	1-1/2	3	5-1/8	3-1/2	19-7/16	21
8	27-3/4	21	34	14-1/2	25-5/8 - 28-7/8	7-1/2	1-3/4	3-1/2	5-7/8	4	21-5/16	23-1/2

Shaft size	K	L	M	N	N1	P	Q	R Pipe		T		U	U1	U2
				STL	SSL			PLXC	WC Rep't	STL	SSL		STL	SSL
3-15/16	11-15/16	8	5-3/4	5-15/16	2-5/8	10-1/8	1-1/4	1	1/2	2-1/8	2-1/8	2-11/16	3/4	3/4
4-7/16	13-7/8	9	6-1/4	6-3/8	3-3/8	11-1/2	1-3/8	1	1/2	3	2	2-13/16	3/4	1
4-15/16	15-1/16	10	7	7-1/16	3-3/4	12-1/2	1-5/16	1-1/4	1/2	2-7/8	2	3-5/16	1	1-1/4
5-7/16	15-15/16	11	7-1/2	7-5/8	4-3/8	13-3/4	1-9/16	1-1/4	1/2	3-3/8	2-1/2	3	1	1-1/4
6	18	12	8-1/4	8-1/4	4-1/2	14-3/4	1-3/4	1-1/4	3/4	3-7/8	2-3/4	3-1/8	1	1-1/4
7	20-1/4	14	9-1/2	9-9/16	5	17	2	1-1/4	3/4	5	3	3-3/4	1-1/4	1-1/4
8	22-1/2	16	10-3/4	11	5-3/4	19	2	1-1/4	3/4	5-1/4	4	4-9/16	1-1/4	1-1/4

Shaft size	V	W	X	Y		Y1		Z	A1	B1
				PLXC	WC Rep't	PLXC	WC Rep't			
3-15/16	3	5	8-9/16	1-1/4	1	1-1/4	1	2-1/8	3/4	7-1/16
4-7/16	3-1/2	5-5/8	9-3/16	1-1/4	1	1-1/4	1	3	3/4	7-5/8
4-15/16	3-1/2	6-1/8	10	1-1/2	1	1-3/4	1	2-7/8	3/4	8
5-7/16	3-1/2	6-3/4	10-3/8	1-1/2	1	1-3/4	1	3-3/8	3/4	8-3/4
6	4	7-1/4	11-3/16	1-3/4	1-1/4	2	1-1/4	3-7/8	1	9-7/8
7	4-1/2	8-3/8	12-15/16	1-3/4	1-1/4	2	1-1/4	5	1	10-7/8
8	5	9-5/8	14-13/16	1-3/4	1-1/4	2	1-1/4	5-1/4	1-1/4	12

One required per pillow block end.

> One required per pillow block.

* 220 volt heaters available. See Page B25-26.

** 2-1/4" on STL; 2" on SSL.

★ If a WC liner is in place, the entire pillow block must be replaced with a PLXC pillow block.

⊗ ⊗ Two required per 3-15/16 through 4-15/16 sizes; three for 5-7/16 and larger.

All sizes are pre-machined for accessories: thermocouples, circulating oil, vibration detector, heater and thermostat.

Sleevoil R pillow block – inch

Plain - standard and short series

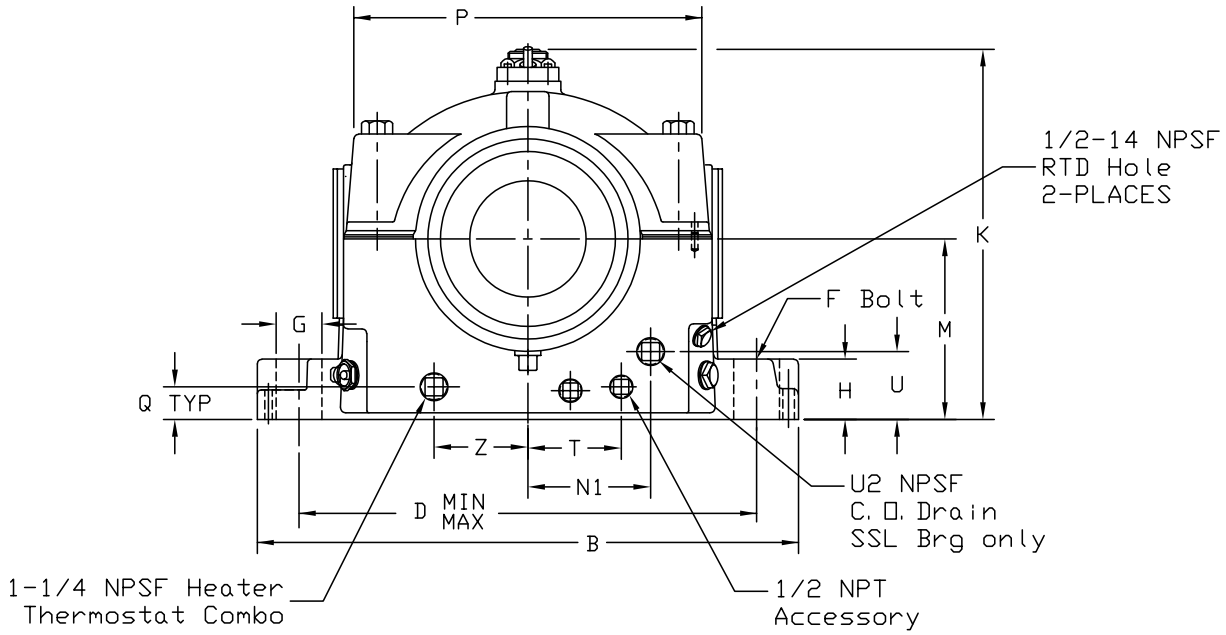

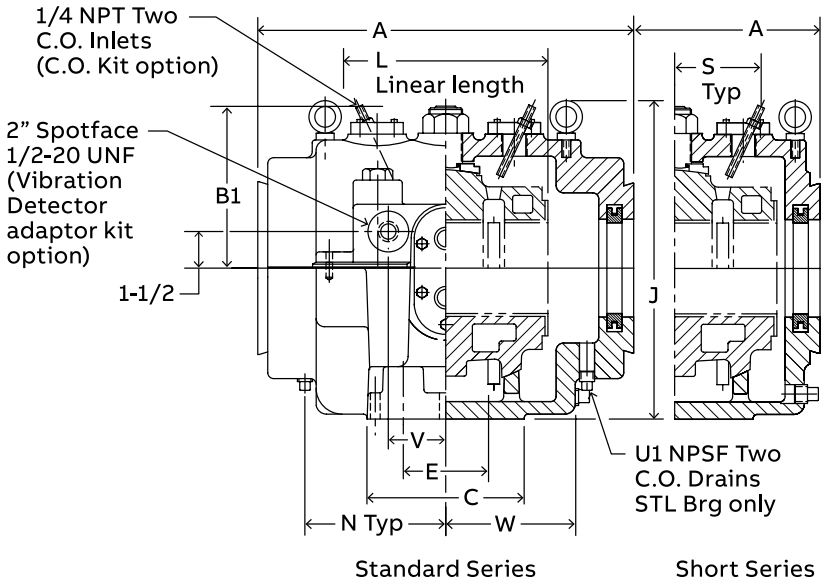

Sleevoil R pillow block – inch

Plain - standard and short series

Shaft size	Plain expansion pillow blocks				Split thrust collars	
	STL		SSL (Short Series Expansion only)		2 collars required to make a non-expansion STL pillow blocks	
	Part number	Weight	Part number	Weight	Part number	Weight
9	132766	1235	132924	1168	133959	54
10	132767	1240	132925	1105	133960	52
12	132768	2000	132926	1785	133961	68
14	431399	3400	430561	3000	431389	75

Shaft size	Auxiliary seal kits ##		Housing end cap kits		Heater / Thermostat * 120 Volt		Circulating oil inlet kits >		Neoprene end closure##		Replacement plain liner assemblies	
	Part number	Weight	Part number	Weight	Part number	Weight	Part number	Weight	Part number	Weight	Part number	Weight
9	132814	23.1	132564	15.9	434727	3.0	430155	2.0	133996	1.5	133550	327
10	132816	24.2	132565	16.4	434727	3.0	430155	2.0	133995	1.6	133669	450
12	132819	40.0	132566	25.0	434729	4.0	430155	2.0	133997	1.9	133392	650
14	132822	36.0	132567	25.0	434729	4.0	430155	2.0	—	—	430831	1200

Shaft size	A		B	C	D (Min-Max)	E	F-bolt	G	H		J	
	STL	SSL	STL and SSL	STL and SSL	STL and SSL	STL and SSL	STL and SSL	STL and SSL	STL	SSL	STL	SSL
9	27-3/4	21	34	14-1/2	25-5/8 - 28-7/8	7-1/2	1-3/4	3-1/2	5-7/8	4	22-3/8	23-1/2
10	27-3/4	21	34	14-1/2	25-5/8 - 28-7/8	7-1/2	1-3/4	3-1/2	5-7/8	4	22-3/8	23-1/2
12	30	23-1/4	40	17	31-1/4 - 34-3/4	9	2	4	6-3/4	6-3/4	29-5/16	29-5/16
14	34	26-1/4	46-1/8	18	36-1/2 - 40-1/2	10	2	4	7	—	35-1/8	35-1/8

Shaft size	K	L	M	N	N1	P	S	T		U	U1	U2	V	Weight (lbs)	
	STL and SSL	STL and SSL	STL and SSL	STL	SSL	STL and SSL	STL and SSL	STL	SSL	SSL	STL		STL and SSL	STL	SSL
9	22-1/2	16	10-3/4	11	5-1/2	19	3	5-1/4	4	3-3/8	1-1/4	1-1/4	5	1235	1168
10	22-1/2	16	10-3/4	11	5-1/2	19	3	5-1/4	4	3-7/8	1-1/4	1-1/4	5	1240	1105
12	28-1/4	18	13-1/2	12-3/8	7-3/4	23-3/4	3-1/2	7	7	5-3/16	1-1/2	1-1/2	7	2000	1785
14	32-5/8	20	16	—	—	28-3/4	—	—	—	—	—	1-1/2	—	—	—

Shaft size	V1		W	Z	B1
	STL	SSL	STL and SSL	STL and SSL	STL
9	1-1/2	1-1/2	9-5/8	5-1/4	12
10	1-1/2	1-1/2	9-5/8	5-1/4	12
12	2	2	11	7	14-1/2.
14	—	—	12-1/16	—	—

One required per pillow block end.

> One required per pillow block.

* 220 volt heaters available. See page B26-24.

All housings are pre-machined for accessories; thermocouples, circulating oil vibration detector, heater and thermostat.

Sleevoil R pillow block – inch

Externally cooled (XC) - standard and short series

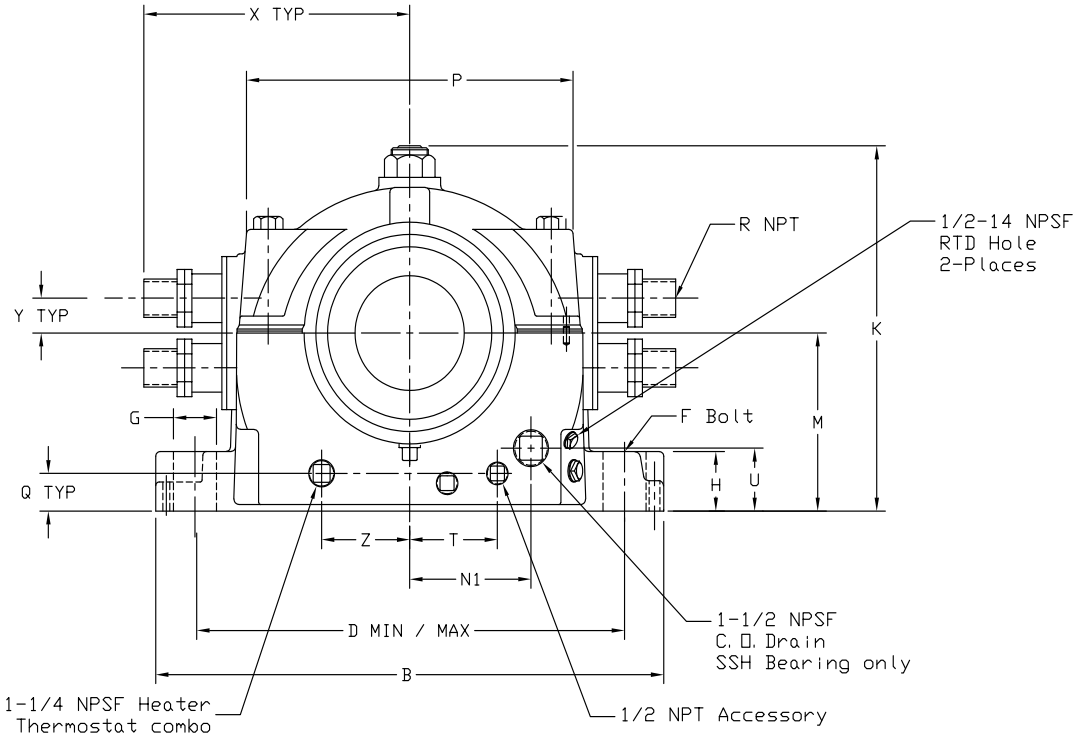

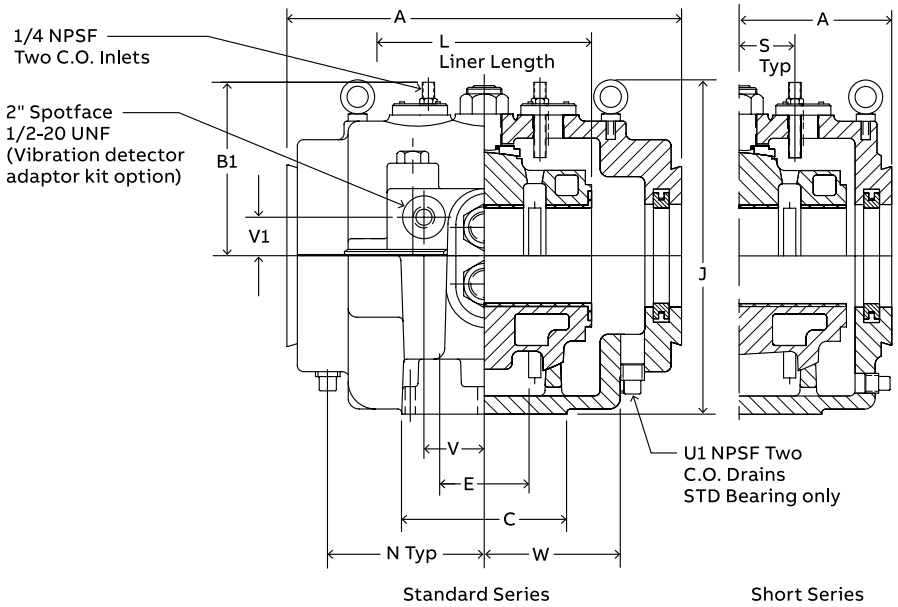

Sleevoil R pillow block – inch

Externally cooled (XC) - standard and short series

Shaft size	Expansion pillow blocks XC (Externally cooled) (Short series expansion only)				2 collars required to make a non-expansion STL pillow block	
	STL-XC		SSL-XC		XC split thrust collars	
	Part number	Weight	Part number	Weight	Part number	Weight
9	132538⊗	1600	133565⊗	1500	133303	57
10	132539⊗	2000	133566⊗	1750	133304	74
12	132559 x	3300	—	—	133305	—

Shaft size	Auxiliary seal kits ##		Housing end cap kits		Heater / thermostat * XC 120 volt		Circulating oil inlet kits >		Neoprene end closure ##		Liner assemblies XC	
	Part number	Weight	Part number	Weight	Part number	Weight	Part number	Weight	Part number	Weight	Part number	Weight
9	132814	23.1	132564	15.9	434729	4.0	430155	2	133996	1.5	132591	300
10	132816	24.2	132565	16.4	434729	4.0	430155	2	133995	1.6	132594	400
12	132819	40.0	132566	25.0	434729	—	—	—	133997	1.9	132597	600

Shaft size	A		B		C		D (Min-Max)		E	
	STL	SSL	STL	SSL	STL	SSL	STL	SSL	STL	SSL
9	29	22-1/4	37	37	15-1/2	15-1/2	28-3/8 - 31-5/8	28-3/8 - 31-5/8	8	8
10	30	23-1/4	40	40	17	17	31-1/4 - 34-3/4	31-1/4 - 34-3/4	9	9
12	34	—	46	—	18	—	36-5/8 - 40-3/8	—	10	—

Shaft size	F-bolt		G		H		J		K		L	M
	STL	SSL	STL	SSL	STL	SSL	STL	SSL	STL	SSL	XC	STL and SSL
9	1-3/4	1-3/4	3-1/2	3-1/2	6	6	26-13/16	26-3/4	25-1/2	25-1/2	17	12
10	2	2	4	4	6-3/4	6-3/4	29-5/16	29-1/4	28-1/4	28-1/4	18	13-1/2
12	2	—	4-1/8	—	7	7	34-3/4	29-5/16	33-1/16	—	20	16

Shaft size	N	N1	P		Q	R Pipe	S	T	U	U1	V	V1
	STL	SSL	STL	SSL	STL and SSL	XC	STL and SSL	STL and SSL	SSL	STL	STL and SSL	STL and SSL
9	11-7/8	5-3/4	21-3/4	21-3/4	2-1/2	1-1/4	3-3/8	6-3/8	5-1/8	1-1/2	5	1-1/2
10	12-3/8	5-1/2	23-3/4	23-3/4	3	1-1/2	3-1/2	7	6-1/8	1-1/2	7	2
12	—	—	28-3/4	—	—	2	—	—	—	—	—	—

Shaft size	W		X	Y	Z	B1	
	STL	SSL	XC	XC	STL and SSL	STL	SSL
9	10-5/8	10-5/8	16-1/4	2-1/4	6-3/8	13-5/8	13-5/8
10	11	11	17-1/2	2-5/8	7	14-1/2	14-1/2
12	12-1/16	—	20-1/4	—	—	—	—

One required per pillow block end.

> One required per pillow block.

⊗ All housings are pre-machined for accessories; thermocouples, circulating oil vibration detector, heater and thermostat.

x Assembled-to-order, not "L" version.

* 220 volt heaters available. See page B26-24.

Accessories

Sleevoil end cap kits – inch



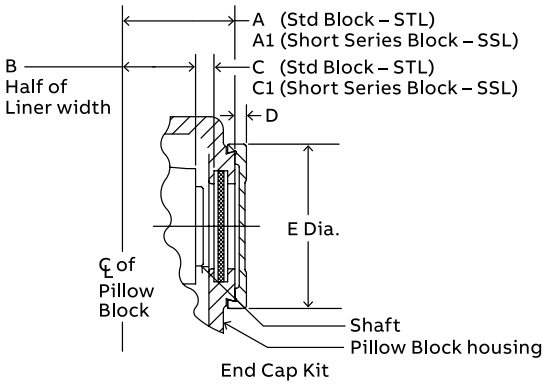

Bore size	Pillow block style	End cap kits				A STL	A1 SSL	B #	C # STL	C1 # SSL
		Part number	Weight	D	E					
3-7/16	Plain/water cooled STL and SSL	132542	5.3	1/2	7-1/8	6-1/2	4-7/8	3-1/2	2-3/32	15/32
3-15/16	PLXC, STL and SSL	432190	6.1	1/2	8	7-1/2	5-1/2	4	2-5/8	5/8
4-7/16		432193	6.8	1/2	8-3/4	8-1/4	6-1/4	4-1/2	2-23/32	23/32
4-15/16		432196	7.3	1/2	9-1/8	9-1/8	6-7/8	5	3- 3/32	27/32
5-7/16		132546	11.6	1/2	10-1/2	9-7/8	7-5/8	5-1/2	3-3/32	27/32
6		132547	10.6	1/2	11-1/2	10-5/8	8-1/8	6	3-11/32	27/32
7		132548	13.5	1/2	12-9/16	12-1/4	9-3/8	7	3-29/32	1-1/32
8		132549	15.5	1/2	14-1/2	13-7/8	10-1/2	8	4-17/32	1- 5/32
9	STL Plain	132564	15.9	1/2	14-1/2	13-7/8	—	8	4-17/32	—
	XC					14-1/2	—	8-1/2	4-21/32	—
	SSL Plain					—	10-1/2	8	—	1-5/32
	SSL					—	11-1/8	8-1/2	—	1-9/32
	XC									
10	STL Plain	132565	16.4	1/2	14-1/2	13-7/8	—	8	4-17/32	—
	XC					15	—	9	4-21/32	—
	SSL					—	10-1/2	8	—	1-5/32
	Plain									
	SSL					—	11-5/8	9	—	1-9/32
	XC									
12	STL Plain	132566	26	1/2	18-3/4	15	—	9	4-21/32	—
14	STD Plain	132567	26.5	1/2	18-3/4	17	—	10	5-21/32	—

Bore size	Pillow block style	End cap kits				A	B #	C #
		Part number	Weight	D	E			
2-15/16	RTL Spherical	435217	5.3lbs	1/2	7-1/8	5	3-3/8	27/32
3-7/16		435217	5.3lbs	1/2	7-1/8	5	3-3/8	27/32
3-15/16		435218	6.1lbs	1/2	8	5-3/8	3-5/8	29/32
3-7/16	RTL	132542	5.3	1/2	7-1/8	5	3-3/8	27/32
3-15/16		432190	6.1	1/2	8	5-3/8	3-5/8	29/32
4-7/16		432193	6.8	1/2	8-3/4	5-7/8	4	1-1/32
4-15/16		432196	7.3	1/2	9-1/8	6-3/8	4-7/16	1-3/32
5-7/16		132546	11.6	1/2	10-1/2	7	5	1-5/32
6		132547	10.6	1/2	11-1/2	8	5-7/16	1-11/32
7		132548	13.5	1/2	12-9/16	9	6-1/4	1-17/32
8		132549	15.5	1/2	14-1/2	9-7/8	7-1/16	1-19/32
9		132564	15.9	1/2	14-1/2	11-3/8	8-1/8	2-1/32
10		132565	16.4	1/2	14-1/2	12-1/4	8-7/8	2-1/32
12		132566	26	1/2	18-3/4	—	—	—

B+C (OR B+C1) = max. shaft penetration from center line of pillow block

Sleevoil auxiliary seal kits – inch

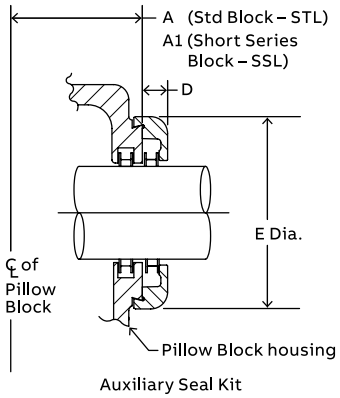



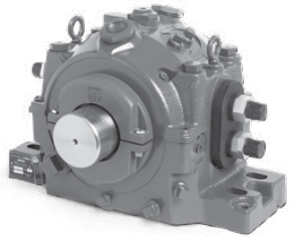

Bore size	Pillow block Style	Auxiliary seal kits Part number	Weight	D	E	A STL	A1 SSL
3-7/16	Plain/water cooled STL and SSL	132811	4.9	15/16	7-1/8	6-1/2	4-7/8
3-15/16	PLXC, STL and SSL	432181	6.4	15/16	8	7-1/2	5-1/2
4-7/16		432184	7.0	1	8-3/4	8-1/4	6-1/4
4-15/16		432187	7.5	1	9-1/8	9-1/8	6-7/8
5-7/16		133932	12.4	1-5/16	10-1/2	9-7/8	7-5/8
6		133933	14.8	1-5/16	11-1/2	10-5/8	8-1/8
7		133937	19.0	1-7/16	12-9/16	12-1/4	9-3/8
8		133938	24.9	1-7/16	14-1/2	13-7/8	10-1/2
9	STL Plain	132814	23.1	1-5/16		13-7/8	—
	XC				14-1/2	14-1/2	—
	SSL Plain					—	10-1/2
	SSL XC				—	11-1/8	8-1/2
10	STL Plain	132816	22	1-5/16	14-1/2	13-7/8	—
	XC					15	—
	SSL Plain					—	10-1/2
	SSL XC					—	11-5/8
12	STL Plain	132819	32	1-5/16	18-3/4	15	—
14	STD Plain	132822	30	1-5/16	18-3/4	17	—

Bore size	Pillow block Style	Auxiliary seal kits Part number	Weight	D	E	A
3-7/16	RTL	132811	4.9	15/16	7-1/8	5
3-15/16		432181	6.4	15/16	8	5-3/8
4-7/16		432184	7.0	1	3-3/4	5-7/8
4-15/16		432187	7.5	1	9-1/8	6-3/8
5-7/16		133932	12.4	1-5/16	10-1/2	7
6		133933	14.8	1-5/16	11-1/2	8
7		133937	19.0	1-7/16	12-9/16	9
8		133938	24.9	1-7/16	14-1/2	9-7/8
9		132814	23.1	1-5/16	14-1/2	13-7/8
10		132816	—	—	—	12-1/4
12		132819	—	—	—	14-1/2

Sleevoil RTL replacement part kits – inch

Shaft size	Part number	RTL seal kit
2-15/16	435000	2-15/16 SLV RTL seal kit
3-7/16	435081	3-7/16 SLV RTL seal kit for post-2014 housing ♦
3-15/16	435082	3-15/16 SLV RTL seal kit for post-2014 housing ♦
4-7/16	435003	4-7/16 SLV RTL seal kit
4-15/16	435004	4-15/16 SLV RTL seal kit
5-7/16	435005	5-7/16 SLV RTL seal kit
6	435006	6 SLV RTL seal kit
7	435007	7 SLV RTL seal kit
8	435008	8 SLV RTL seal kit
9	435009	9 SLV RTL seal kit
10	435010	10 SLV RTL seal kit
12	435011	12 SLV RTL seal kit

Each kit contains:
(2) Split alumimun clamp seals, (2) O-rings and gasket eiminator.
♦ For pre-2014 housings, use part number 435001 for shaft size 3-7/16 inch and part number 435002 for 3-15/16 inch.

Shaft size	Part number	RTL plunger screw kit
3-7/16	435012	3-7/16" SLV RTL plunger screw kit
3-15/16	435012	3-15/16" SLV RTL plunger screw kit
4-7/16	435013	4-7/16" SLV RTL plunger screw kit
4-15/16	435014	4-15/16" SLV RTL plunger screw kit
5-7/16	435015	5-7/16" SLV RTL plunger screw kit
6	435015	6" SLV RTL plunger screw kit
7	435016	7" SLV RTL plunger Screw kit
8	435017	8" SLV RTL plunger screw kit
9	435018	9" SLV RTL plunger screw kit
10	435019	10" SLV RTL plunger screw kit
12	435019	12" SLV RTL plunger screw kit

Each kit contains plunger screw and plunger screw lock nut.

Shaft size	Part number	RTL grommet kit
3-7/16	435027	3-7/16 SLV RTL grommet kit
3-15/16	435028	3-15/16 SLV RTL grommet kit
4-7/16	435028	4-7/16 SLV RTL grommet kit
4-15/16	435029	4-15/16 SLV RTL grommet kit
5-7/16	435029	5-7/16 SLV RTL grommet kit
6	435029	6 SLV RTL grommet kit
7	435029	7 SLV RTL grommet kit
8	435030	8 SLV RTL grommet kit
9	435030	9 SLV RTL grommet kit
10	435031	10 SLV RTL grommet kit
12	435032	12 SLV RTL grommet kit

Each kit contains:
(2) grommets and grommet plates, (4) lock tubes,
(8) lock nuts, (4) coolant pipes and gasket eliminator.

Shaft size	Part number	RTL coolant hose kit
3-7/16	434770	3/4" Sleevoil coolant hose kit
3-15/16	434771	1" Sleevoil coolant hose kit
4-7/16	434771	1" Sleevoil coolant hose kit
4-15/16	434772	1-1/4"Sleevoil coolant hose kit
5-7/16	434772	1-1/4"Sleevoil coolant hose kit
6	434772	1-1/4"Sleevoil coolant hose kit
7	434772	1-1/4"Sleevoil coolant hose kit
8	434773	2" Sleevoil coolant hose kit
9	434773	2" Sleevoil coolant hose kit
10	434774	2-1/2" Sleevoil coolant hose kit
12	434775	3" Sleevoil coolant hose kit

Each coolant hose kit contains:
(2) straight (inlet/outlet) hoses, (1) return hose and the required couplers, adapters and fittings.

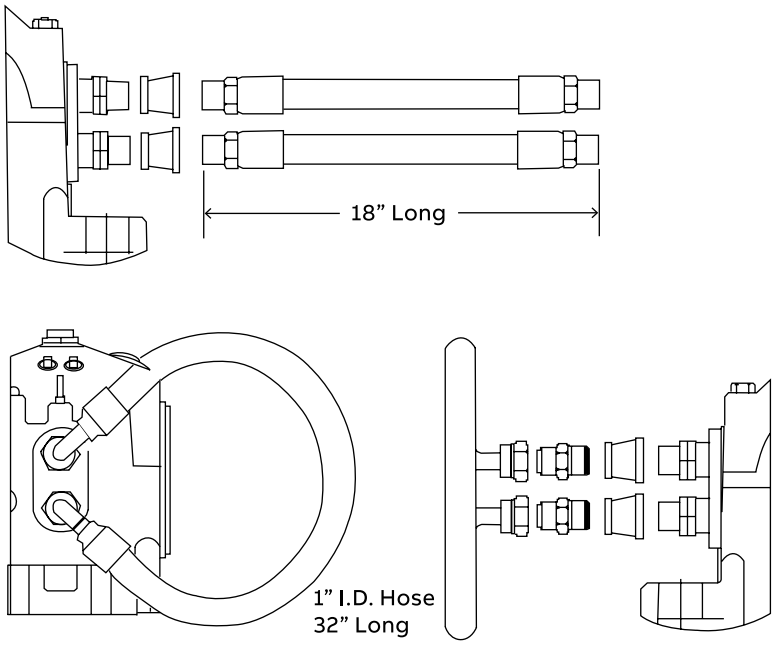

Coolant Hose Kit illustrated here

Sleevoil R replacement part kits – inch

Shaft size	Part number	R dust seal kits
1-7/16	389820	1-7/16 Dust seal kit
1-11/16	389821	1-11/16 Dust seal kit
1-15/16	389822	1-15/16 Dust seal kit
2-3/16	389823	2-3/16 Dust seal kit
2-7/16	389824	2-7/16 Dust seal kit
2-11/16	389825	2-11/16 Dust seal kit
2-15/16	389826	2-15/16 R Series dust seal kit
3-7/16	389827	3-7/16 Dust seal kit
3-15/16	389828	3-15/16 Dust seal kit
4-7/16	389829	4-7/16 Dust seal kit
4-15/16	389830	4-15/16 Dust seal kit
5-7/16	389831	5-7/16 Dust seal kit
6	389832	6 Dust seal kit
7	389833	7 Dust seal kit
8	389834	8 Dust seal kit
9	389835	9 Dust seal kit
10 *	389836	10 Dust seal kit
12 *	389837	12 Dust seal kit

Each kit contains:
(2) dust seals, (2) seal retainers and gasket eliminator
* kit contains (4) seal retainers.

Shaft size	Part number	R coolant hose kit
1-11/16	133344	1/4" Sleevoil flexible water hose kit
1-15/16	133344	1/4" Sleevoil flexible water hose kit
2-3/16	133344	1/4" Sleevoil flexible water hose kit
2-7/16	133344	1/4" Sleevoil flexible water hose kit
2-11/16	133344	1/4" Sleevoil flexible water hose kit
2-15/16	133344	1/4" Sleevoil flexible water hose kit
3-7/16	133344	1/4" Sleevoil flexible water hose kit
3-15/16 XC	434771	1" Sleevoil coolant hose kit
4-7/16 XC	434771	1" Sleevoil coolant hose kit
4-15/16 XC	434772	1-1/4" Sleevoil coolant hose kit
5-7/16 XC	434772	1-1/4" Sleevoil coolant hose kit
6 XC	434772	1-1/4" Sleevoil coolant hose kit
7 XC	434772	1-1/4" Sleevoil coolant hose kit
8 XC	434772	1-1/4" Sleevoil coolant hose kit
9 XC	434772	1-1/4" Sleevoil coolant hose kit
10 XC	434797	1-1/2" Sleevoil coolant hose kit
12 XC	434773	2" Sleevoil coolant hose kit

Each coolant hose kit contains (2) straight (inlet/outlet) hoses, (1) return hose and the required couplers, adapters and fittings.

Shaft size	Part number	R plunger screw kit
3-15/16	435012	3-15/16 PL-XC plunger screw kit
4-7/16	435021	4-7/16 PL-XC plunger screw kit
4-15/16	435021	4-15/16 PL-XC plunger screw kit
5-7/16	435013	5-7/16 PL-XC plunger screw kit
6	435015	6 PL-XC plunger screw kit
7	435016	7 PL-XC plunger screw kit
8	435016	8 PL-XC plunger screw kit
9 XC	435018	9 PL-XC plunger screw kit
10 XC	435018	10 PL-XC plunger screw kit
12 XC	435019	12 PL-XC plunger screw kit
9 PL	435016	9 PL-XC plunger screw kit
10 PL	435016	10 PL-XC plunger screw kit
12 PL	435018	12 PL-XC plunger screw kit

Each kit contains plunger screw and plunger screw lock nut.

Shaft size	Part number	R grommet kit
3-15/16	435033	3-15/16 PL-XC grommet kit
4-7/16	435033	4-7/16 PL-XC grommet kit
4-15/16	435034	4-15/16 PL-XC grommet kit
5-7/16	435034	5-7/16 PL-XC grommet kit
6	435035	6 PL-XC grommet kit
7	435035	7 PL-XC grommet kit
8	435036	8 PL-XC grommet kit
9 PL	435037	9 PLAIN grommet kit
9 XC	435038	9 XC Pipe grommet kit
10 PL	435037	10 PLAIN grommet kit
10 XC	435039	10 XC Pipe grommet kit
12 XC	435040	12 XC Pipe grommet kit

Each kit contains: (2) Rubber grommets, (2) Grommet plates,
(8) Screws, (4) Coolant pipes – in PL-XC and XC grommett kits only and gasket eliminator.



PL XC grommets and grommet plates pictured here

Sleevoil R and RTL heater and thermostat – inch

Shaft size	Part number	RTL combination heater/thermostat - 110V
3-7/16	434721	175 W 110V Immersion heater/T-stat combo
3-15/16	434725	260 W 110 V Immersion heater/T-stat combo
4-7/16	434725	260 W 110 V Immersion heater/T-stat combo
4-15/16	434727	480 W 110 V Immersion heater/T-stat combo
5-7/16	434727	480 W 110 V Immersion heater/T-stat combo
6	434727	480 W 110 V Immersion heater/T-stat combo
7	434729	740 W 110 V Immersion heater/T-stat combo
8	434729	740 W 110 V Immersion heater/ T-stat combo
9	434729	740 W 110 V Immersion heater/T-stat combo
10	434729	740 W 110 V Immersion heater/T-stat combo
12	434735	1600 W 110 V Immersion heater/ T-stat combo

Single unit - 110V combination heater and thermostat.

Shaft size	Part number	RTL combination heater/thermostat - 220V
3-7/16	434722	175 W 220V Immersion heater/T-stat combo
3-15/16	434726	260 W 220 V Immersion heater/T-stat combo
4-7/16	434726	260 W 220 V Immersion heater/T-stat combo
4-15/16	434728	480 W 220 V Immersion heater/T-stat combo
5-7/16	434728	480 W 220 V Immersion heater/T-stat combo
6	434728	480 W 220 V Immersion heater/T-stat combo
7	434730	740 W 220 V Immersion heater/T-stat combo
8	434730	740 W 220 V Immersion heater/T-stat combo
9	434730	740 W 220 V Immersion heater/T-stat combo
10	434730	740 W 220 V Immersion heater/T-stat combo
12	434736	1600 W 220 V Immersion heater/T-stat combo

Single unit - 220V combination heater and thermostat.

Shaft size	Part number	R-Series combination heater/thermostat - 110V
2-7/16 *	132834	50 W 110V Immersion heater
2-11/16 *	132384	50 W 110V Immersion heater
2-15/16 *	132384	50 W 110V Immersion heater
3-7/16	434719	100 W 110V Immersion heater/T-stat combo
3-15/16	434721	175 W 110 V Immersion heater/T-stat combo
4-7/16	434721	175 W 110 V Immersion heater/T-stat combo
4-15/16	434721	175 W 110 V Immersion heater/T-stat combo
5-7/16	434721	175 W 110 V Immersion heater/T-stat combo
6	434725	260 W 110 V Immersion heater/T-stat combo
7	434725	260 W 110 V Immersion heater/T-stat combo
8	434727	480 W 110 V Immersion heater/T-stat combo
9 XC	434729	740 W 110 V Immersion heater/T-stat combo
9 PL	434727	480 W 110 V Immersion heater/T-stat combo
10 XC	434729	740 W 110 V Immersion heater/T-stat combo
10 PL	434727	480 W 110 V Immersion heater/T-stat combo
12 XC	434729	740 W 110 V Immersion heater/T-stat combo
12 PL	434729	740 W 110 V Immersion heater/T-stat combo
14 PL	434729	740 W 110 V Immersion heater/T-stat combo

Single unit - 110V combination heater and thermostat.
* Requires listed heater part number and thermostat part number 133116.
Heater/thermostat combo includes LED current indicating light and NEMA 4 LB enclosure 2-7/16", 2-11/16" and 2-15/16" heater (132834 or 434835) to be used with thermostat part number 133116. Combination heater/thermostat is not available for small bore Sleevoil bearings.

Shaft size	Part number	R-Series combination heater/thermostat - 220V
2-7/16	434835 *	50 W 220V Immersion heater
2-11/16	434835 *	50 W 220V Immersion heater
2-15/16	434835 *	50 W 220V Immersion heater
3-7/16	434720	100 W 220V Immersion heater/T-stat combo
3-15/16	434722	175 W 220 V Immersion heater/T-stat combo
4-7/16	434722	175 W 220 V Immersion heater/T-stat combo
4-15/16	434722	175 W 220 V Immersion heater/T-stat combo
5-7/16	434722	175 W 220 V Immersion heater/T-stat combo
6	434726	260 W 220 V Immersion heater/T-stat combo
7	434726	260 W 220 V Immersion heater/T-stat combo
8	434728	480 W 220 V Immersion heater/T-stat combo
9 XC	434730	740 W 220 V Immersion heater/T-stat combo
9 PL	434728	480 W 220 V Immersion heater/T-stat combo
10 XC	434730	740 W 220 V Immersion heater/T-stat combo
10 PL	434728	480 W 220 V Immersion heater/T-stat combo
12 XC	434730	740 W 220 V Immersion heater/T-stat combo
12 PL	434730	740 W 220 V Immersion heater/T-stat combo
14 PL	434730	740 W 220 V Immersion heater/T-stat combo

Single unit - 220V combination heater and thermostat.
* Requires listed heater part number and thermostat part number 133116



Sleevoil R and RTL trapezoidal oil ring – inch

- Lower operating temperatures
- Designed for existing and new Sleevoil bearings
- Interchangeable with T-section oil ring
- Increases oil delivered to the shaft
- Increases bearing maximum operating speed range
- Increases oil ring life



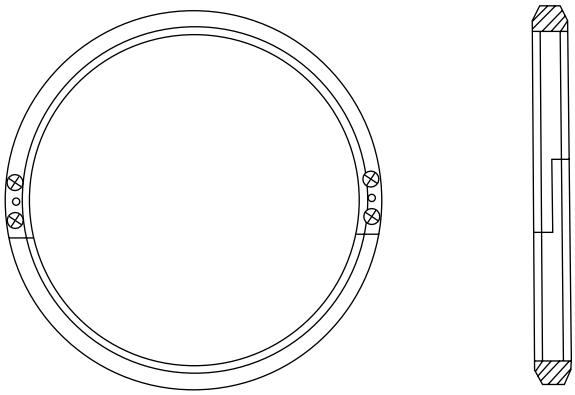

Plain	PLXC or WC Repl.	RTL	T-section number	Trapezoidal oil ring number
1-7/16	—	—	130063	135700
1-11/16	1-11/16	—	130044	135704
1-15/16	1-15/16	—	130045	135708
2-3/16	2-3/16	—	130047	135712
2-7/16	2-7/16	—	130049	135716
2-11/16	2-11/16	—	130050	135720
2-15/16	2-15/16	—	130051	135724
3-7/16	3-7/16	—	130054	135728
3-15/16	3-15/16	3-7/16	130056	135290
4-7/16	4-7/16	3-15/16	130057	135291
4-15/16	4-15/16	4-7/16	130058	135292
5-7/16	5-7/16	4-15/16	130059	135293
6	6	5-7/16	130060	135294
	—	6	130078	135295
7	7	—	130062	135136
8	8	7	130065	135296
9, 10	—	8	130066	135297
	9	—	130067	135137
	—	9	130068	135298
	10	—	130064	135138
12	—	—	130070	135732
	12	10	130073	135299
14	—	—	130069	135736
	—	12	130071	135135

Note: T-section oil rings will be discontinued and superseded to the trapezoidal oil rings as inventory is depleted.

Sleevoil vibration detector adapter kit – inch

Vibration detector adapter kit part number 430153

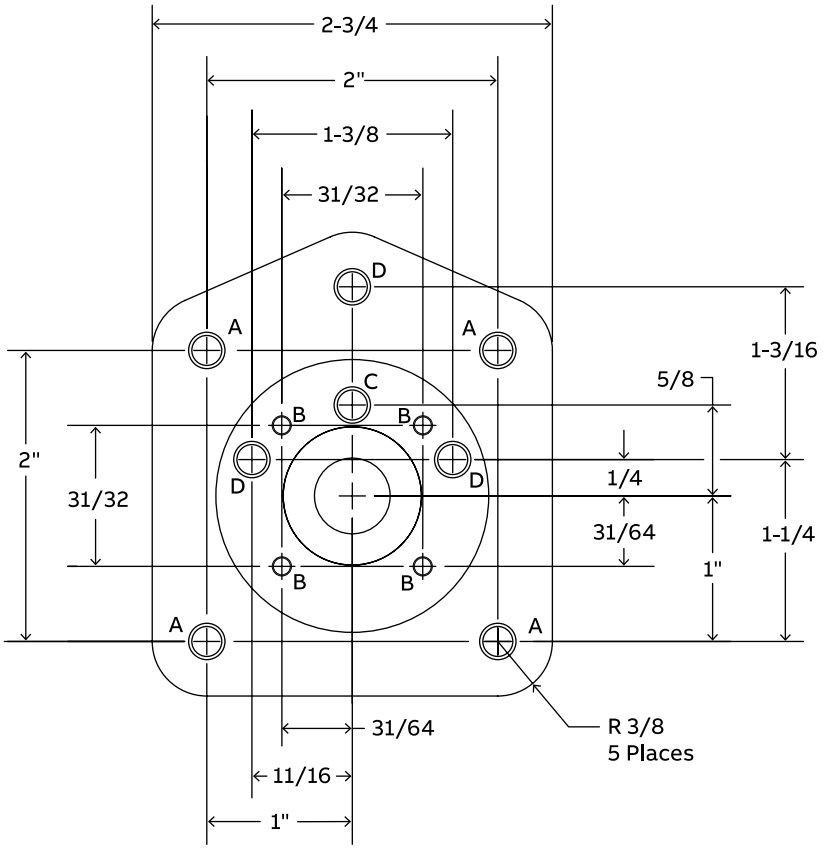

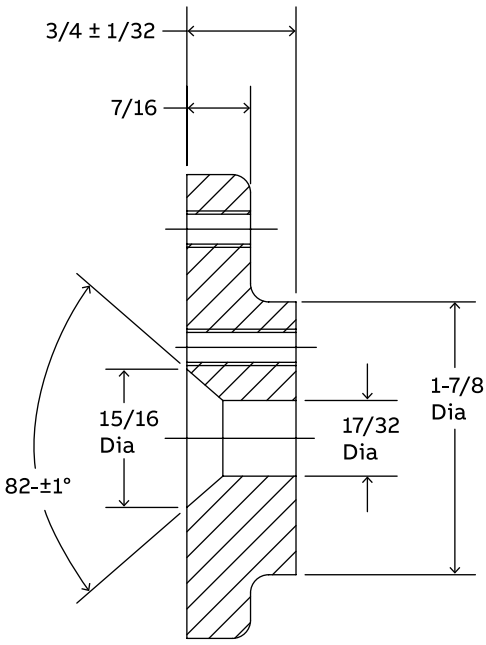

Vibration detector adapter kit part number 430153

Sleevoil accessories

(A) Hole 5 (.2055) dia. drill through 1/4-20 tap through – A30935

(B) Hole #32 (.116) dia. drill through 6-32 tap through – A30936

(C) Hole 7/32 dia. drill through 1/4-28 tap through – A30937

(D) Hole 5 (.2055) dia. drill through 1/4-20 tap through – A30938

Blank vibration detector adapter kit part number 433326



Sleevoil Oil Level and Filtration System-2 (OLF2)

Oil level and filtration system fits all Sleevoil bearings

- Standard NEMA motor
- Oil pump supply line
- Pressure gauge
- Spin on filter
- Return line connection – 1" NPT coupling with two inlets
- Removable tank cover
- Five gallon tank
- Oil Level/temperature tauge
- Immersion heater and thermostat option – 1" NPT port
- Mounting bracket
- Filtered breather (not shown)
- Nameplate (not shown)



Oil level and filtration systems

Description	Part number
Single Phase Motor*, 2.0 GPM Pump	077587
Three Phase Motor**, 2.0 GPM Pump	077588
Three Phase XP-Motor**, 2.0 GPM Pump	077589
Three Phase Motor (575V) 2.0 GPM Pump	077484

*Single Phase Motor 60 Hz, 120 Volt.
**Three Phase Motor 50/60 Hz, 230/460 Volt.

Optional parts[1]

Description	Part number
Combination heater/thermostat 260 watt, 120 volt heater	434725
Combination heater/thermostat 260 watt, 240 volt heater	434726
Flow meter kit	079498
Desiccant filter kit (to be installed in series with standard filter)	079754
Replacement oil filter	078202

[1] Not included with OLF2. Order desired part if required.

Oil inlet connections:

Sleevoil series	Bore sizes	Need circulating oil grommet kit part number
R Series	1-7/16" – 3-7/16"	Not required
	3-15/16"	432153
	4-7/16" – 4-15/16"	430198
	5-7/16" – 12"	430155
RTL Series	3-7/16" – 5-7/16"	132203
	6" – 12"	132205

Flow meter kit (optional[1])
Connects to OLF-2 output in order to control the oil flow rates between two bearings.

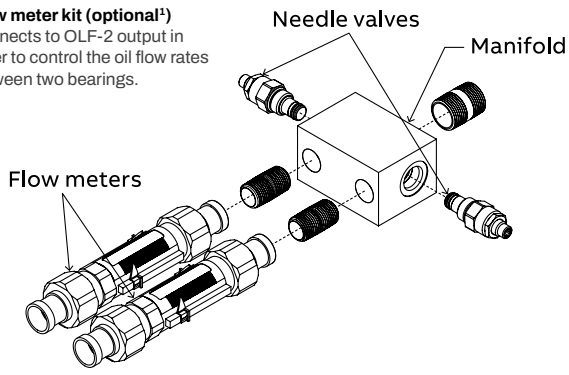

Sleevoil R and RTL bearing isolator – inch

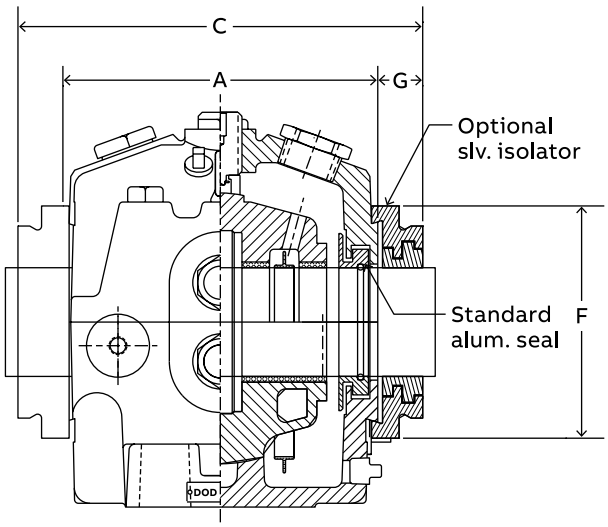

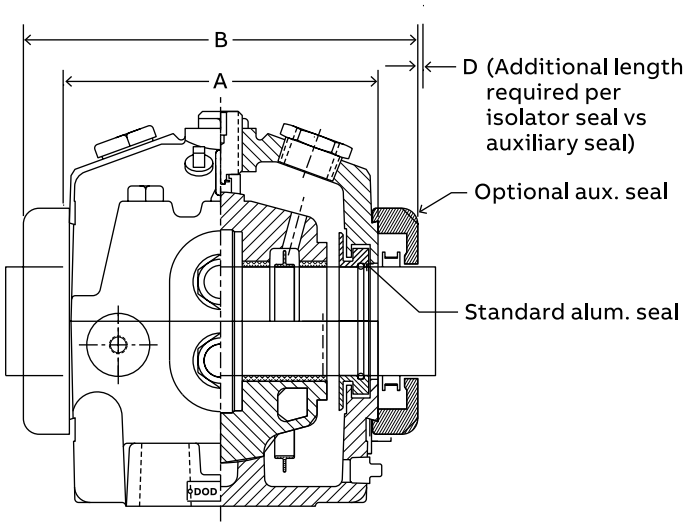

RTL Housing length through bore with seal offerings

Size	Part number	A	B	C	D	E	F	G
2-15/16*	435230	10	11-7/8	12-5/8	3/8	3/4	7-3/8	1-5/16
3-7/16	434706	10	11-7/8	12-5/8	3/8	3/4	7-3/8	1-5/16
3-15/16	434707	10-3/4	12-5/8	13-3/8	3/8	3/4	8-1/4	1-5/16
4-7/16	434708	11-3/4	13-3/4	14-3/8	5/16	5/8	9	1-5/16
4-15/16	434709	12-3/4	14-3/4	15-3/8	5/16	5/8	9-1/2	1-5/16
5-7/16	434710	14	16-5/8	16-5/8	0	0	10-3/4	1-5/16
6	434711	16	18-5/8	18-7/8	1/8	1/4	11-5/8	1-7/16
7	434712	18	20-7/8	20-7/8	0	0	12-3/4	1-7/16
8	434713	19-3/4	22-5/8	22-5/8	0	0	14-3/4	1-7/16
9	434714	22-3/4	25-3/8	25-5/8	1/8	1/4	14-3/4	1-7/16
10	434715	24-1/2	27-1/8	27-3/8	1/8	1/4	14-3/4	1-7/16
12	434716	29	31-5/8	31-7/8	1/8	1/4	18-1/2	1-7/16

Notes:
A – Length through housing bore with standard aluminum seal.
B – Length through housing bore with optional auxiliary seals.
C – Length through housing bore with optional isolator seals.
D – Additional length required per isolator seal vs auxiliary seal.
E – Additional shaft length required.
F – Isolator outside diameter.
G – Isolator width from housing end face.
* – Isolator can also be used with R-Series except 2-15/16.

For further information regarding Sleevoil Bearing Isolator, see page B26-4.

Notes

Solidlube (plain)

B27-1	**Solidlube (plain)**
B27-2	**Features and benefits**
B27-2	**Specification**
B27-3	**How to order**
B27-3	**Nomenclature**
B27-4	**Selection**
B27-10	**Dimensions**
B27-10	LT pillow block
B27-12	LTB pillow block
B27-14	MM pillow block
B27-15	MM flange
B27-16	LT flange
B27-20	LT narrow-slot take-up
B27-22	LT wide-slot take-up
B27-24	LT top-angle take-up
B27-26	LT insert
B27-28	MM insert
B27-29	LT cylindrical unit
B27-30	LT screw conveyor hanger bearing
B27-31	LT hanger bearing
B27-32	LM800 pillow block
B27-33	LM800 flange
B27-34	Shaft collars

Features and benefits

Solidlube

Designed for the most challenging applications, Solidlube bearings can handle full submersion in water, exposure to corrosive liquids, and high heat. Engineered to work in ovens, heat-treating processes, dampers, and difficult applications across a variety of industries, Solidlube is the solution to keep your operations running smoothly.



Key features

- Self-lubricated for maintenance-free operation
- Durable inner unit is made of cast iron with a corrosion-resistant coating to protect from rust and improve product life
- Statically self-aligning

Ideal for:

- Inaccessible locations
- Corrosive environments
- Applications operating in a vacuum
- High-heat applications for temperatures up to 1,000 °F
- Applications where bearings are subject to dry cycles or where lubrication systems would be too costly
- Submersible applications of some low viscosity liquids
- Slow speeds and limited shaft movement applications

Specification

Specifying Solidlube sleeve bearings

Statically self-aligning, non-galling, solid-film lubricating for temperature extremes.

- 700 series: -40° to 700 °F
- 800 series: -40° to 800 °F
- 1000 series: -200° to -40 °F; 250 °F to 1,000 °F

How to order

Solidlube

There are two ways to specify Dodge bearings—by six-digit part number or by description. Most of the products offered have part numbers with listings shown throughout this catalog. Use of part numbers ensures accurate order processing.

When part numbers are not shown, the product may be specified by description. This method is used when ordering units that include modifications or options. To order by description, use the nomenclature key shown for each product, adding any special instructions to the end of the description for options not covered by the nomenclature.

Special bearing requirements

Depending on the bearing, a wide variety of lubricants, seals, locking devices, finishes, and adjustments are available for a wide range of applications from general purpose to extreme ambient temperatures, high speeds, or high loads.

Special lubricant options usually involve set-up charges, minimum quantities, and price premiums. To order, specify the type of lubricant required at the end of the product name or after the standard part number.

Example:

F4B-XX-207 except with Mobil HTS #2 grease

or

P/N-XXXXXX except with Mobil HTS #2 grease

Other special requirements not listed

For applications requiring modifications not listed, contact Application Engineering for bearings at +1 864 284 5700.

Nomenclature

P2B - LT7 - 108 - SH

Housings

P2B = Pillow block, 2-bolt
P4B = Pillow block, 4-bolt
F2B = Flange, 2-bolt
F4B = Flange, 4-bolt
HNG = Hanger bearing
NSTU = Narrow slot take-up
SCHB = Screw conveyor hanger bearing
WSTU = Wide-slot take-up
TB = Tapped base
FB = Flanged bracket

Modifications/features:

SH = Stainless steel housing (Available with Solidlube LT series only)

Shaft size

115 = First digit = Number of inches
Second and third digits = Sixteenths of an inch
115 – Indicates 1-15/16

50M = First two digits = Bore in millimeters;
M – Indicates metric dimension

Style

LT7 = Solidlube LT700 series
LT10 = Solidlube LT1000 series
LTB7 = Solidlube lower backing height on pillow blocks for LT700 series
LTB10 = Solidlube lower backing height on pillow blocks for LT1000 series
LM8 = Solidlube LM800 series
MM7 = Solidlube MM700 series
MM10 = Solidlube MM1000 series

Selection

Solidlube

Bearing size

Select a bearing from tables for normal loads or loads in limited shaft movement applications having a radial load equal to or greater than the actual load. This simple method is all that is required for the majority of general machine applications using commercial steel shafting and operating in a dry atmosphere. (For more favorable conditions, ratings may be increased somewhat; consult factory). Shaft collars may be used for slight amounts of thrust. Generally the rule of 10 percent of the radial load applies. Dirty environments will reduce bearing life and should be avoided. Losses due to friction can be as high as 30 percent depending on speed, lead, temperature and shaft material.

Shafting

Commercial steel shafting is good in applications where temperatures do not exceed 700 °F. However, for extended bearing life at any temperature, the shaft should be hardened to 35 Rockwell “C” or better. Shaft finish should be 10 to 20 micro-inches. A finish rougher than 20µ will lessen bearing life. A finish smoother than 10 will not allow the optimum lubricant film to develop. Shaft tolerance should be +.000/-.002 inches for commercial steel shafting. If using other shaft materials, consult Application Engineering at +1 864 284 5700 for the shaft tolerance and thermal expansion.

When commercial shafting is exposed to a corrosive media, it will oxidize. A rusty shaft will grow in the bearing, thus eliminating clearances. In this case stainless steel shafting may be used and/or provide for regularly scheduled movement of shaft. In elevated temperatures stainless grades such as 17-4, 15-5, or 13-8 are hardenable. Shafts can be spray coated with ceramic or hard chrome for applications up to about 800 °F. Check with your supplier, since these coatings can flake off when the coefficient of thermal expansion of the base material differs greatly from that of the coating.

High grade specialty shafting may be used in excess of 1,000 °F. It may be less expensive to use sleeves of this material on more economical shafting.

Noise or high pitched squeal

Carbon-graphite bushings can develop a high frequency vibration in resonance with the operating system to cause noise. Dampening or change of resonant frequency of the shaft is required to eliminate noise.

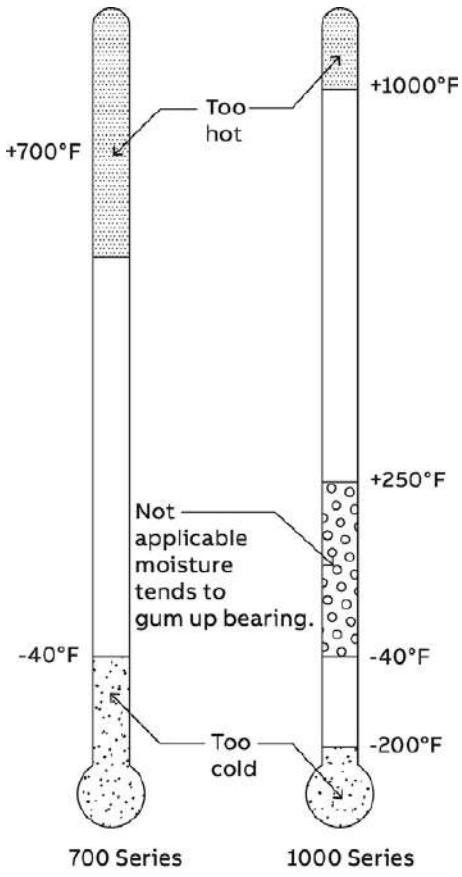

Solidlube operating temperature

Solidlube

Specials

Solidlube bearings or bearings made from alternate bushing materials such as polymers, fibers, bronze, etc. for unusual operating and load conditions are available on a specially engineered basis by supplying the following:

- Shaft size, material, and rpm
- Normal load, shock load and frequency
- Direction of load
- Ambient temperature and atmospheric conditions (water, dirt, corrosive, etc.)
- Type of bearing: pillow block, flange bearing, etc.
- Housing material desired
- Quantity

Note: Solidlube bearings are not designed for rotating housing applications.

Solidlube

700, 800, and 1000 series

Solidlube bearing 700 and 1000 Series Radial Load Ratings in pounds (normal loads)

Shaft size (in)	Radial Load Ratings in pounds at various revolutions per minute											
	Up to 10	25	50	75	100	150	200	250	300	350	400	450
3/4	560	560	560	560	560	380	285	230	190	165	145	125
7/8, 15/16, 1	750	750	750	750	610	405	315	245	205	175	155	130
1-1/8, 1-3/16	1050	1050	1050	908	680	450	340	270	225	190	170	150
1-1/4, 1-3/8, 1-7/16, 1-1/2	1610	1610	1610	1140	855	570	430	340	280	245	215	190
1-11/16, 1-3/4	1980	1980	1790	1190	895	595	440	390	295	255	220	200
1-15/16, 2	2360	2360	1860	1240	930	620	465	370	310	265	235	205
2-3/16	2870	2870	2010	1340	1000	670	500	400	335	285	250	225
2-7/16, 2-1/2	3760	3760	2360	1580	1180	795	590	475	390	340	295	265
2-15/16, 3	5970	5970	3120	2070	1560	1040	780	625	515	445	390	345
3-7/16, 3-1/2	9100	8010	4000	2670	2000	1340	1000	800	670	570	500	445
3-15/16, 4	11800	9160	4590	3060	2290	1530	1150	930	765	665	575	510
4-7/16, 4-1/2	15200	10300	5150	3440	2580	1720	1290	1030	860	740	645	—
4-15/16, 5	18400	11400	5710	3810	2860	1910	1430	1140	955	815	—	—

Shaft size (in)	500	550	600	700	800	900	1000	1100	1300	1600	1900	2200	2500
3/4	110	105	96	82	72	64	57	52	44	35	30	26	22
7/8, 15/16, 1	120	110	105	90	80	70	60	54	47	38	32	—	—
1-1/8, 1-3/16	135	125	115	97	85	75	68	62	42	42	—	—	—
1-1/4, 1-3/8, 1-7/16, 1-1/2	170	155	145	120	105	95	86	78	66	—	—	—	—
1-11/16, 1-3/4	180	165	150	130	110	99	89	81	—	—	—	—	—
1-15/16, 2	185	170	155	135	115	105	—	—	—	—	—	—	—
2-3/16	200	180	165	145	125	—	—	—	—	—	—	—	—
2-7/16, 2-1/2	235	215	195	170	—	—	—	—	—	—	—	—	—
2-15/16, 3	345	315	290	—	—	—	—	—	—	—	—	—	—
3-7/16, 3-1/2	400	365	—	—	—	—	—	—	—	—	—	—	—

Note: The above ratings apply to all base loaded pillow blocks, all cylindrical units and flange type bearings (up to 700 °F).
For flange bearings operating at temperatures above 700 °F, cap and side loading of pillow blocks consult Application Engineering.
For operations speeds below heave line, use LT1000 and/or hardened shaft.

Solidlube

700, 800, and 1000 series

Solidlube bearing corrosion (chemical) resistance

Type of chemical	Chemical	Bearing series	
		LM800 700	1000
Acids and acidic solutions	Mineral (non-oxidizing)	★	★
	Mineral (oxidizing)	■	★
	Inorganic Salts (acid forming)	★	★
	Organic (strong)	★	★
	Organic (weak) pH 3-7	★	★
	Organic Salts (acid forming)	★	★
Alkalis (bases and alkaline solutions)	Mineral (non-oxidizing)	★	★
	Mineral (oxidizing)	▲	★
	Inorganic Salts (base forming)	★	★
	Organic (strong)	★	★
	Weak organic bases pH 7-11	★	★
Gases	Acid	★	★
	Alkaline (base)	★	★
	Anhydrous (dew point below -30 ˚F)	▲	▲
	Cyrogenic (liquefied)	■	▲
	Inert	★	★
	Oxidizing	■	▲
	Reducing	★	★
Salts	Acid salts	▲	▲
	Alkaline sales	▲	▲
	Metals	★	★
	Neutral salts	■	▲
	Neutral salt solutions	★	★
Solvents	Aliphatic	★	★
	Aromatic	★	★
	Chlorinated, fluorinated	★	★
	Oxygenated, sulfides	★	★

★ Good. Not known interaction; compatible.

▲ Questionable (depends on conditions).

■ Not recommended.

700 and 1000 series Solidlube bearing radial load rating in pounds (limited shaft movement applications) ▲

Shaft size (in)	Maximum radial load		Maximum thrust
	Base loaded	Cap or side loading	
3/4	1100	775	56
7/8, 15/16, 1	1500	795	75
1-1/8, 1-3/16	2100	820	105
1-1/4, 1-3/8, 1-7/16, 1-1/2	3200	1710	161
1-11/16, 1-3/4	4000	1905	198
1-15/16, 2	4700	1920	236
2-3/16	5700	1900	287
2-7/16, 2-1/2	7500	2360	376
2-15/16, 3	12,000	4151	597

▲ Use only when shaft movement is limited to approximately +/-90º. Movement is infrequent as opposed to continuous and maximum bearing temperature is 700ºF.

LM800 radial load ratings

Bearing size (in)	Max. radial base load	Max. radial cap load
3/4	560	560
1	750	600
1-1/4	1610	600
1-1/2	1610	600

Note: These load ratings are to be used only when shaft rotation is less than 10 rpm and temperature does not exceed 800º F. Maximum allowable thrust load is 50 lbs

Solidlube – metric

Bearing size

Select a bearing from tables for normal loads or loads in limited shaft movement applications having a radial load equal to or greater than the actual load. This simple method is all that is required for the majority of general machine applications using commercial steel shafting and operating in a dry atmosphere. (For more favorable conditions, ratings may be increased somewhat; consult factory). Shaft collars may be used for slight amounts of thrust. Generally the rule of 10 percent of the radial load applies. Dirty environments will reduce bearing life and should be avoided. Losses due to friction can be as high as 30 percent depending on speed, load, temperature and shaft material.

Shafting

Commercial steel shafting is good in applications where temperatures do not exceed 370 °C. However, for extended bearing life, at any temperature, the shaft should be hardened to 35 Rockwell "C" or better. Shaft finish should be .25 to .50 micro-meters. A finish rougher than .50 will lessen bearing life. A finish smoother than Ra. 25 micro-meters will not allow the optimum lubricant film to develop. Shaft tolerance should be +.000/-.051 millimeters for commercial steel shafting. If using other shaft materials, consult Dodge for the shaft tolerance and thermal expansion.

When commercial shafting is exposed to a corrosive media, it will oxidize. A rusty shaft will grow in the bearing, thus eliminating clearances. In this case stainless steel shafting may be used and/or provide for regularly scheduled movement of shaft. In elevated temperatures stainless grades such as 17-4, 15-5, or 13-8 are hardenable. Shafts can be spray coated with ceramic or hard chrome. This is good up to about 425 °C. Check with your supplier, since these coatings can flake off when the coefficient of thermal expansion of the base material differs greatly from that of the coating.

High grade specialty shafting may be used in excess of 537 °C. It may be less expensive to use sleeves of this material on more economical shafting.

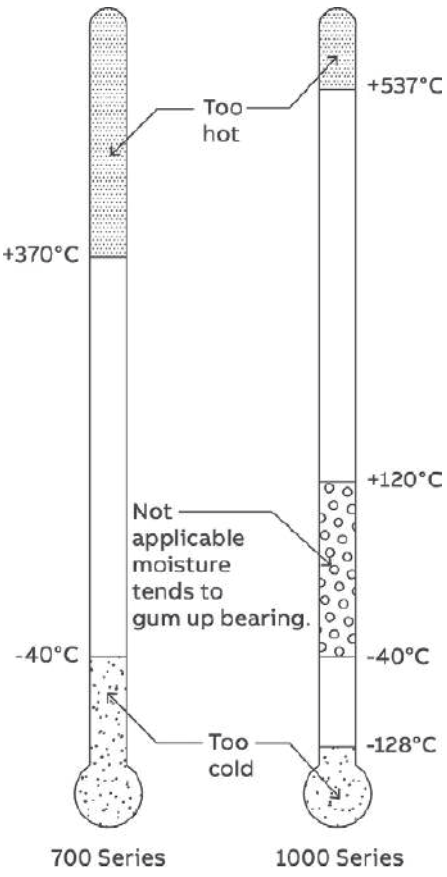

Solidlube operating temperature

Noise or high pitched squeal

Carbon-graphite bushings can develop a high frequency vibration in resonance with the operating system to cause noise. Dampening or change of resonant frequency of the shaft is required to eliminate noise.

Specials

Solidlube bearings or bearings made from alternate bushing materials such as polymers, fibers, bronze, etc. for unusual operating and load conditions are available on a specially engineered basis by supplying the following:

- Shaft size, material and rpm
- Normal load, shock load and frequency
- Direction of load
- Ambient temperature and atmospheric conditions (water, dirt, corrosive, etc.)
- Type of bearing: pillow block, flange bearing, etc.
- Housing material desired
- Quantity

End covers

- Ball bearing end covers are available

Note: Solidlube bearings are not designed for rotating housing applications

Solidlube – metric

700 and 1000 series

Solidlube bearing 700 and 1000 series radial load ratings in newtons (N) normal loads

Series	Shaft size (mm)	Radial load ratings in newtons at various revolutions per minute											
		10	25	50	75	100	150	200	250	300	350	400	450
204	20	2490	2490	2490	2490	2490	1690	1270	1020	840	730	640	560
205	25	3340	3340	3340	3340	2710	1800	1400	1090	910	780	690	580
206	30	4670	4670	4670	4040	3020	2000	1510	1200	1000	840	760	670
207	35	7160	7160	7160	5070	3800	2540	1910	1510	1240	1090	960	840
209	40, 45	8800	8800	7960	5290	3980	2650	1960	1740	1310	1130	980	890
210	50	10500	10500	8270	5520	4140	2760	2070	1650	1380	1180	1040	910
212	60	16700	16700	10500	7030	5250	3540	2620	2110	1730	1510	1310	1180
215	70, 75	26500	26500	13900	9200	6940	4630	3470	2780	2290	1980	1740	1540

Series	Shaft size (mm)	Radial load ratings in newtons at various revolutions per minute												
		500	550	600	700	800	900	1000	1100	1300	1600	1900	2200	2500
204	20	490	470	430	360	320	200	250	230	200	160	130	120	100
205	25	530	490	470	400	360	310	270	240	210	170	140	—	—
206	30	600	560	510	430	380	330	300	280	190	190	—	—	—
207	35	760	690	640	530	470	420	380	350	300	—	—	—	—
209	40, 45	800	730	670	580	490	440	400	360	—	—	—	—	—
210	50	820	760	690	600	510	470	—	—	—	—	—	—	—
212	60	1040	960	870	760	—	—	—	—	—	—	—	—	—
215	70, 75	1530	1400	1290	—	—	—	—	—	—	—	—	—	—

Note: The above ratings apply to all base loaded pillow blocks, all cylindrical units an flange type bearings (up to 370 °C).
For flange bearings operating at temperatures above 370 °C, cap and side loading of pillow blocks consult Applications Engineering.
For operation speeds below heavy line, use LT1000 and/or hardened shaft.

Solidlube bearing 700 and 1000 series radial load rating in pounds (limited shaft movement applications)▲

Series	Shaft size (mm)	Maximum radial load		Maximum Thrust
		Base loaded	Cap or side loading	
204	20	4890	3450	250
205	25	6670	3540	330
206	30	9340	3650	470
207	35	14200	7600	720
209	40, 45	17800	8470	880
210	50	20900	8540	1050
212	60	33400	10500	1670
215	70, 75	53400	18500	2660

▲ Use only when shaft movement is limited to approximately +/-90°.
Movement is infrequent as opposed to continuous and maximum bearing temperature is 700 °F.

Dimensions

Solidlube LT pillow block – inch

2-bolt

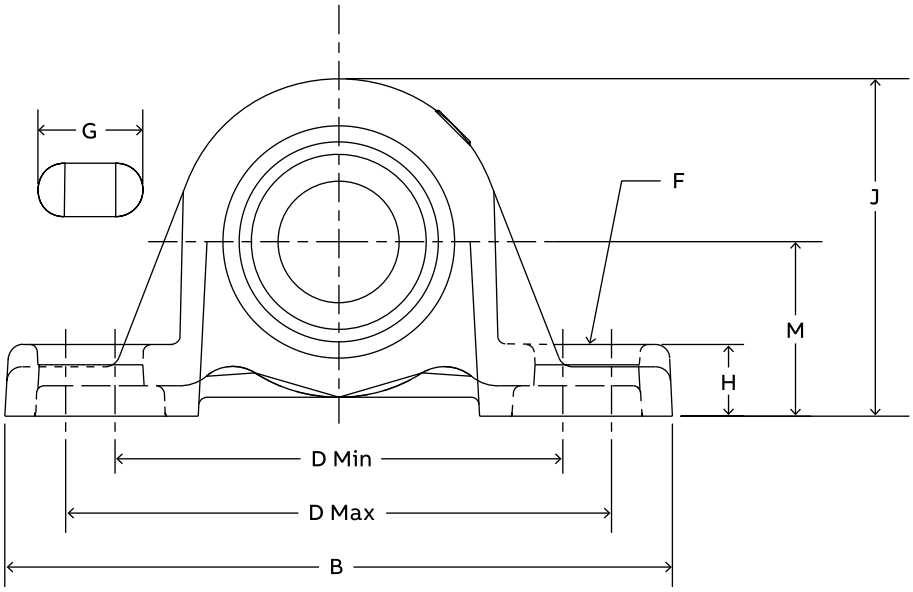

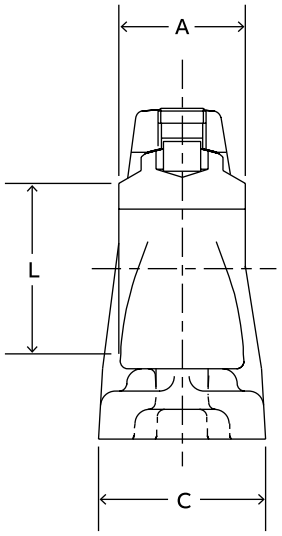

Series	Shaft size	700 series			1000 series			Used on frame
		Part number	Description	Weight	Part number	Description	Weight	
204	3/4	033667	P2B-LT7-012	1.70	033977	P2B-LT10-012	1.70	LD-10
	20 mm	034225	P2B-LT7-20M	0.77	034234	P2B-LT10-20M	0.77	LD-10
205	7/8	033668	P2B-LT7-014	1.60	033978	P2B-LT10-014	1.60	LD-10
	15/16	033669	P2B-LT7-015	1.50	033979	P2B-LT10-015	1.50	
	1	033670	P2B-LT7-100	1.40	033980	P2B-LT10-100	1.40	
	25 mm	034226	P2B-LT7-25M	0.64	034235	P2B-LT10-25M	0.64	LD-10
206	1-1/8	033672	P2B-LT7-102	2.80	033982	P2B-LT10-102	2.80	LD-20
	1-3/16	033673	P2B-LT7-103	2.70	033983	P2B-LT10-103	2.70	
	30 mm	034227	P2B-LT7-30M	1.22	034236	P2B-LT10-30M	1.22	LD-20
207	1-1/4	033674	P2B-LT7-104	4.20	033984	P2B-LT10-104	4.20	LD-20
	1-3/8	033676	P2B-LT7-106	3.90	033986	P2B-LT10-106	3.90	
	1-7/16	033677	P2B-LT7-107	3.80	033987	P2B-LT10-107	3.80	
	1-1/2	033678	P2B-LT7-108	3.70	033988	P2B-LT10-108	3.70	
	35 mm	034228	P2B-LT7-35M	1.77	034237	P2B-LT10-35M	1.77	LD-20
209	1-11/16	033680	P2B-LT7-111	6.00	033990	P2B-LT10-111	6.00	LD-20
	1-3/4	033681	P2B-LT7-112	5.80	033991	P2B-LT10-112	5.80	
	40 mm	034229	P2B-LT7-40M	2.72	034238	P2B-LT10-40M	2.72	LD-20
	45 mm	034230	P2B-LT7-45M	2.63	034239	P2B-LT10-45M	2.63	
210	1-15/16	033682	P2B-LT7-115	6.80	033992	P2B-LT10-115	6.80	LD-30
	2	033683	P2B-LT7-200	6.60	033993	P2B-LT10-200	6.60	
	50 mm	034231	P2B-LT7-50M	3.08	034240	P2B-LT10-50M	3.08	LD-30
211	2-3/16	033684	P2B-LT7-203	8.00	033994	P2B-LT10-203	8.00	LD-40
212	2-7/16	033686	P2B-LT7-207	10.10	033996	P2B-LT10-207	10.10	LD-40
	2-1/2	033687	P2B-LT7-208	9.80	033997	P2B-LT10-208	9.80	
	60 mm	034221	P2B-LT7-60M	4.58	034241	P2B-LT10-60M	4.58	LD-40
215	2-15/16	033688	P2B-LT7-215	21.20	033998	P2B-LT10-215	21.20	LD-45
	3	033077	P2B-LT7-300	20.90	033974	P2B-LT10-300	20.90	
	70 mm	034232	P2B-LT7-70M	9.98	034242	P2B-LT10-70M	9.98	LD-45
	75 mm	034233	P2B-LT7-75M	9.62	034243	P2B-LT10-75M	9.62	

Solidlube LT pillow block – inch

2-bolt

Series	Shaft size	A	B	C	D		F bolt dia.	G	H	J	L	M
					Min.	Max.						
204	3/4	1	5-1/4	1-11/32	3-3/8	4-3/16	3/8	27/32	17/32	2-9/16	1-3/8	1-5/16
	20 mm	25.4	133.4	34.1	85.7	106.4	10	21.4	13.5	65.1	34.9	33.3
205	7/8	1-1/16	5-1/2	1-13/32	3-11/16	4-1/2	3/8	27/32	19/32	2-25/32	1-9/16	1-7/16
	15/16											
	1											
	25 mm	27.0	139.7	35.7	93.7	114.3	10	21.4	15.1	70.6	39.7	36.5
206	1-1/8	1-3/16	6-1/4	1-3/4	4-1/4	5	1/2	15/16	11/16	3-1/4	1-13/16	1-5/8
	1-3/16											
	30 mm	30.2	158.8	44.5	108.0	127.0	12	23.8	17.5	82.6	46.0	41.3
207	1-1/4	1-5/16	6-1/2	1-3/4	4-11/16	5-7/16	1/2	15/16	23/32	3-3/4	2-1/8	1-7/8
	1-3/8											
	1-7/16											
	1-1/2											
	35 mm	33.3	165.1	44.5	119.1	138.1	12	23.8	18.3	95.3	54.0	47.6
209	1-11/16	1-9/16	7-7/16	2	5-1/2	6-3/16	1/2	29/32	3/4	4-9/32	2-9/16	2-1/8
	1-3/4											
	40 mm	39.7	188.9	50.8	139.7	157.2	12	23.0	19.1	108.7	65.1	54.0
	45 mm											
210	1-15/16	1-5/8	8-1/8	2-1/4	6	6-11/16	5/8	1-1/32	3/4	4-17/32	2-13/16	2-1/4
	2											
	50 mm	41.3	206.4	57.1	152.4	170.0	16	26.2	19.1	115.1	71.4	57.2
211	2-3/16	1-3/4	8-7/8	2-5/16	6-3/8	7-7/16	5/8	1-7/32	7/8	4-31/32	3-1/8	2-1/2
212	2-7/16	1-13/16	9-1/2	2-3/8	6-7/8	7-15/16	5/8	1-7/32	7/8	5-13/32	3-1/2	2-3/4
	2-1/2											
	60 mm	46.0	241.3	60.3	174.6	201.6	16	31.0	22.2	137.3	88.9	69.9
215	2-15/16	2-23/32	11-3/4	2-7/8	8-1/2	9-1/2	7/8	1-7/16	1	6-3/4	3-15/16	3-1/2
	3											
	70 mm	69.1	298.5	73.0	215.9	241.3	22	36.5	25.4	171.5	100.0	88.9
	75 mm											

All dimensions are in inches (millimeters are noted with units above).

The LT and LTB pillow blocks are identical except the LTB pillow blocks have lower backing dimensions.

Solidlube LTB pillow block – inch

2-bolt

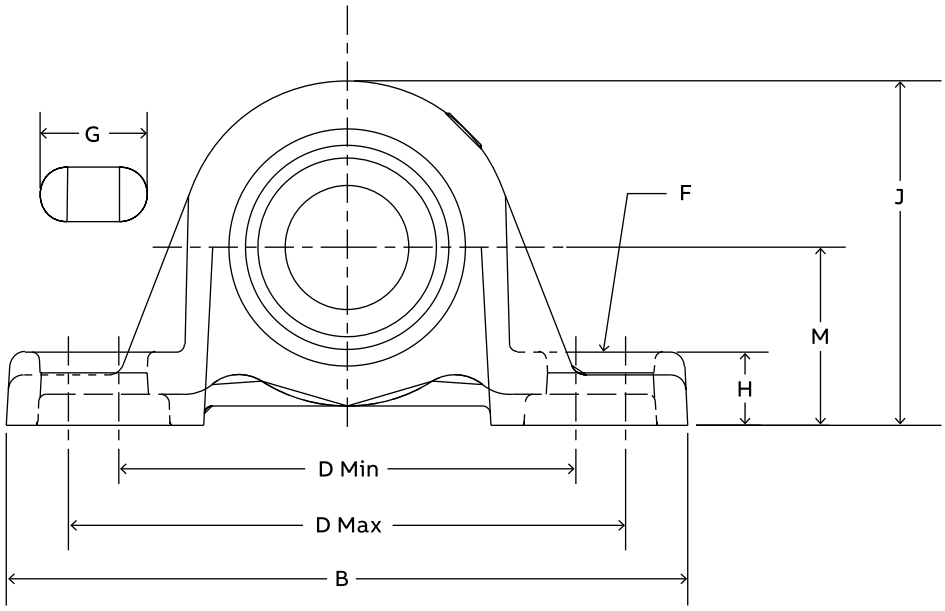

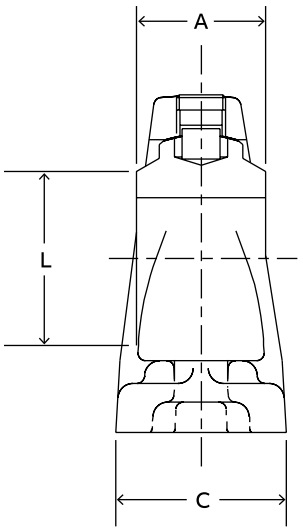

Series	Shaft size	700 series			1000 series			Used on frame
		Part number	Description	Weight	Part number	Description	Weight	
204	3/4	032940	P2B-LTB7-012	1.6	032970	P2B-LTB10-012	1.6	LD-10
	20 mm	034244	P2B-LTB7-20M	0.73	034252	P2B-LTB10-20M	0.73	LD-10
205	7/8	032941	P2B-LTB7-014	1.5	032971	P2B-LTB10-014	1.5	LD-10
	15/16	032942	P2B-LTB7-015	1.4	032972	P2B-LTB10-015	1.4	
	1	032943	P2B-LTB7-100	1.3	032973	P2B-LTB10-100	1.3	
	25 mm	034245	P2B-LTB7-25M	0.59	034253	P2B-LTB10-25M	0.59	LD-10
206	1-1/8	032945	P2B-LTB7-102	2.7	032975	P2B-LTB10-102	2.7	LD-20
	1-3/16	032946	P2B-LTB7-103	2.6	032976	P2B-LTB10-103	2.6	
	30 mm	034246	P2B-LTB7-30M	1.18	034254	P2B-LTB10-30M	1.18	LD-20
207	1-1/4	032947	P2B-LTB7-104	4	032977	P2B-LTB10-104	4	LD-20
	1-3/8	032949	P2B-LTB7-106	3.8	032979	P2B-LTB10-106	3.8	
	1-7/16	032950	P2B-LTB7-107	3.7	032980	P2B-LTB10-107	3.7	
	1-1/2	032951	P2B-LTB7-108	3.6	032981	P2B-LTB10-108	3.6	
	35 mm	034247	P2B-LTB7-35M	1.72	034255	P2B-LTB10-35M	1.72	LD-20
209	1-11/16	032953	P2B-LTB7-111	5	032983	P2B-LTB10-111	5	LD-20
	1-3/4	032954	P2B-LTB7-112	4.8	032984	P2B-LTB10-112	4.8	
	40 mm	034248	P2B-LTB7-40M	2.27	034256	P2B-LTB10-40M	2.27	LD-20
	45 mm	034249	P2B-LTB7-45M	2.18	034257	P2B-LTB10-45M	2.18	
210	1-15/16	032955	P2B-LT87-115	6	032985	P2B-LTB10-115	6	LD-30
	2	032956	P2B-LTB7-200	5.8	032986	P2B-LTB10-200	5.8	
	50 mm	034250	P2B-LTB7-50M	2.72	034258	P2B-LTB10-50M	2.72	LD-30
211	2-3/16	032957	P2B-LTB7-203	6.5	032987	P2B-LTB10-203	6.5	LD-40
212	2-7/16	032959	P2B-LTB7-207	8.1	032989	P2B-LTB10-207	8.1	LD-40
	2-1/2	032960	P2B-LTB7-208	7.8	032990	P2B-LTB10-208	7.8	
	60 mm	034251	P2B-LTB7-60M	3.67	034259	P2B-LTB10-60M	3.67	LD-40
215	2-15/16	034596	P2B-LTB7-215	18.7	034598	P2B-LTB10-215	18.7	LD-45
	3	034597	P2B-LTB7-300	18.4	034599	P2B-LTB10-300	18.4	
	70 mm	—	—	—	—	—	—	LD-45
	75 mm	—	—	—	—	—	—	

Solidlube LTB pillow block – inch

2-bolt

Series	Shaft size	A	B	C	D		F bolt dia.	G	H	J	L	M
					Min.	Max.						
204	3/4	1	5-1/4	1-11/32	3-3/8	4-3/16	3/8	27/32	15/32	2-1/2	1-3/8	1-1/4
	20 mm	25.4	133.4	34.1	85.7	106.4	10	21.4	11.9	63.5	34.9	31.8
205	7/8 15/16 1	1-1/16	5-1/2	1-13/32	3-11/16	4-1/2	3/8	27/32	15/32	2-21/32	1-9/16	1-5/16
	25 mm	27.0	139.7	35.7	93.7	114.3	10	21.4	11.9	67.5	39.7	33.3
206	1-1/8 1-3/16	1-3/16	6-1/4	1-3/4	4-1/4	5	1/2	15/16	5/8	3-3/16	1-13/16	1-9/16
	30 mm	30.2	158.8	44.5	108.0	127.0	12	23.8	15.9	81.0	46.0	39.7
207	1-1/4 1-3/8 1-7/16 1-1/2	1-5/16	6-1/2	1-3/4	4-11/16	5-7/16	1/2	15/16	21/32	3-11/16	2-1/8	1-13/16
	35 mm	33.3	165.1	44.5	119.1	138.1	12	23.8	16.7	93.7	54.0	46.0
209	1-11/16 1-3/4	1-9/16	7-7/16	2	5-1/2	6-3/16	1/2	29/32	11/16	4-7/32	2-9/16	2-1/16
	40 mm 45 mm	39.7	188.9	50.8	139.7	157.2	12	23.0	17.5	107.2	65.1	52.4
210	1-15/16 2	1-5/8	8-1/8	2-1/4	6	6-11/16	5/8	1-1/32	11/16	4-15/32	2-13/16	2-3/16
	50 mm	41.3	206.4	57.1	152.4	170.0	16	26.2	17.5	113.5	71.4	55.6
211	2-3/16	1-3/4	8-7/8	2-5/16	6-3/8	7-7/16	5/8	1-7/32	13/16	4-29/32	3-1/8	2-7/16
212	2-7/16 2-1/2	1-13/16	9-1/2	2-3/8	6-7/8	7-15/16	5/8	1-7/32	13/16	5-11/32	3-1/2	2-11/16
	60 mm	46.0	241.3	60.3	174.6	201.6	16	31.0	20.6	135.7	88.9	68.3
215	2-15/16 3	2-23/32	11-3/4	2-7/8	8-1/2	9-1/2	7/8	1-7/16	1-1/16	6-9/16	3-15/16	3-5/16
	70 mm 75 mm	69.1	298.5	73.0	215.9	241.3	22	36.5	—	—	100.0	—

All dimensions are in inches (millimeters are noted with units above).

The LT and LTB pillow blocks are identical except the LTB pillow blocks have lower backing dimensions.

Solidlube MM pillow block – inch

2-bolt

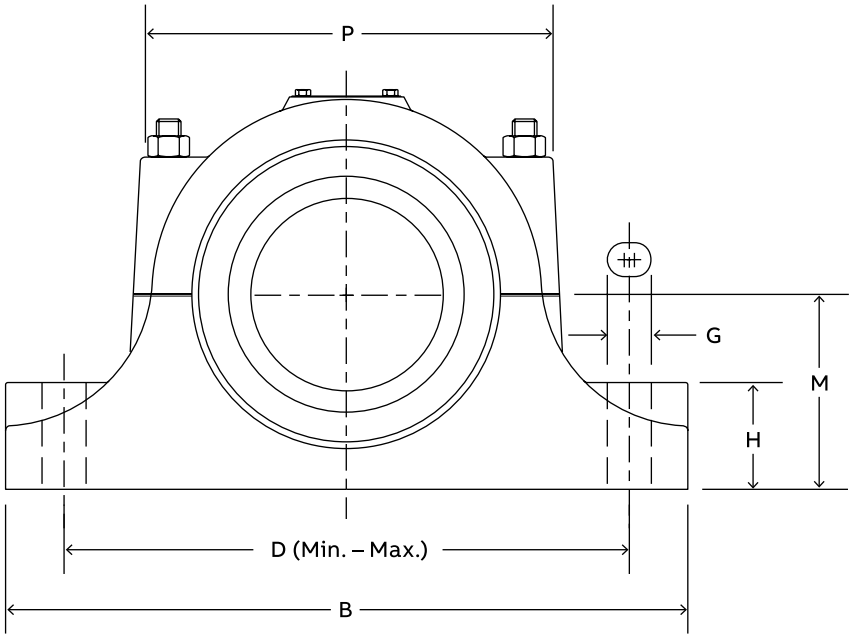

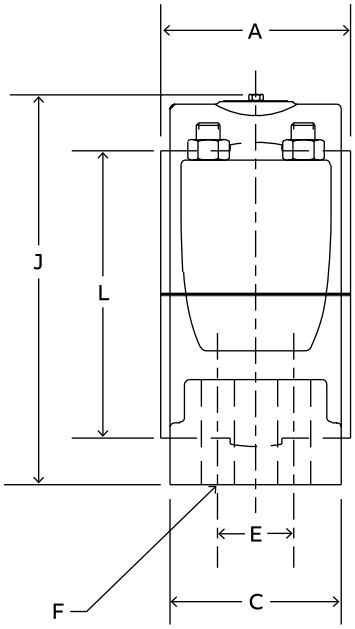

Shaft size	700 series		1000 series		Weight	Used on frame	A	B	C
	Part number	Description	Part number	Description					
3-7/16	033247	P2B-MM7-307	033347	P2B-MM10-307	23.00	HD-250	3-1/2	12	2-13/16
3-1/2	033251	P2B-MM7-308	033351	P2B-MM10-308	22.80				
3-15/16	033475	P2B-MM7-315	033480	P2B-MM10-315	36.00	HD-300	4	13-7/16	3-3/16
4	033485	P2B-MM7-400	033490	P2B-MM10-400	35.80				
4-7/16	033500	P2B-MM7-407	033505	P2B-MM10-407	60.00	HD-350	4-1/2	16	3-7/16
4-1/2	033510	P2B-MM7-408	033515	P2B-MM10-408	59.70				
4-15/16	033525	P4B-MM7-415	033530	P4B-MM10-415	92.00	HD-400	5	17-7/16	4-3/4
5	033535	P4B-MM7-500	033540	P4B-MM10-500	91.50				

Shaft size	D		2-bolt base	4-bolt base		G	H	J	L	M	P
	Min.	Max.	F bolt dia.	E	F bolt dia.						
3-7/16 3-1/2	9-1/4	10-1/4	5/8	—	—	1-1/4	1-3/4	7	4-7/8	3-1/4	7- 1/4
3-15/16 4	9-7/8	11-1/2	3/4	—	—	1-11/16	2	7-15/16	5-5/8	3-3/4	8-3/16
4-7/16 4-1/2	12-13/16	13-13/16	7/8	—	—	1-1/2	2-1/4	9-7/16	6-15/16	4-1/2	10
4-15/16 5	13-1/8	14-3/4	—	2	3/4	1-11/16	2-3/4	10-1/2	7-9/16	5	10-5/8

Note: No published metric dimensions for this product.

Solidlube MM flange – inch

4-bolt

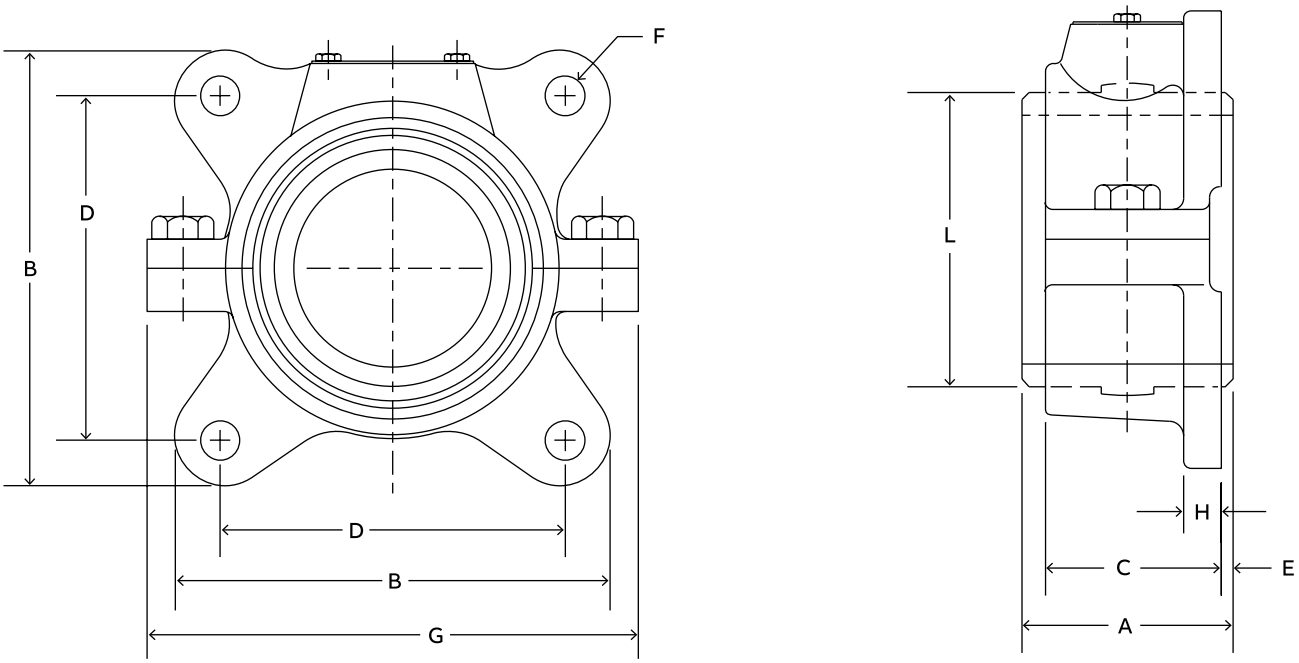

Shaft size	700 series		1000 series		Weight
	Part number	Description	Part number	Description	
3-7/16	033323	F4B-MM7-307	033868	F4B-MM10-307	17.00
3-1/2	033321	F4B-MM7-308	033931	F4B-MM10-308	18.00
3-15/16	032923	F4B-MM7-315	033899	F4B-MM10-315	26.00
4	032937	F4B-MM7-400	033932	F4B-MM10-400	
4-7/16	033862	F4B-MM7-407	033933	F4B-MM10-407	42.00
4-1/2	033863	F4B-MM7-408	033934	F4B-MM10-408	
4-15/16	033929	F4B-MM7-415	033869	F4B-MM10-415	62.00
5	033930	F4B-MM7-500	033867	F4B-MM10-500	

Shaft size	A	B	C	D	E	F	G	H	L
3-7/16 3-1/2	3-1/2	7-5/8	2-59/64	6	3/16	5/8	8-9/16	5/8	4- 7/8
3-15/16 4	4	8-7/8	3-11/32	6-7/8	1/4	3/4	9-1/2	11/16	5- 5/8
4-7/16 4-1/2	4-1/2	10-1/4	3-23/32	8-1/8	1/4	7/8	11-3/8	3/4	6-15/16
4-15/16 5	5	11-7/16	4- 5/8	9-3/16	1/8	1	12-7/8	13/16	7- 9/16

Note: No published metric dimensions for this product.

Solidlube LT flange – inch

2-bolt

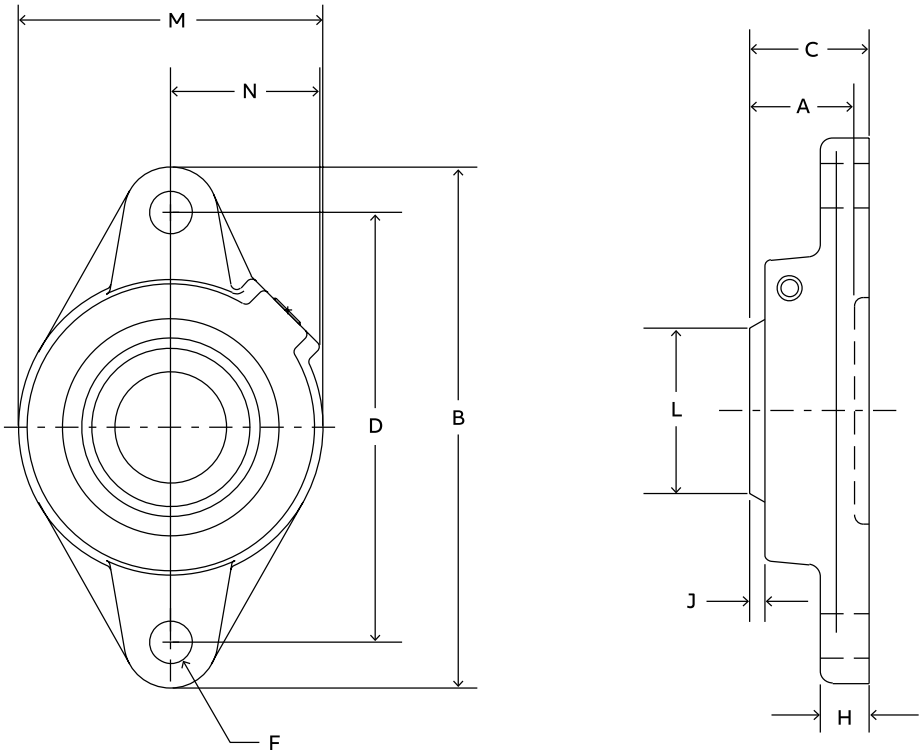

Series	Shaft Size	700 series			1000 series		
		Part number	Description	Weight	Part number	Description	Weight
204	3/4	033085	F2B-LT7-012	1.2	033185	F2B-LT10-012	1.2
	20 mm	034260	F2B-LT7-20M	0.54	034266	F2B-LT10-20M	0.54
205	7/8	033086	F2B-LT7-014	1.7	033186	F2B-LT10-014	1.7
	15/16	033087	F2B-LT7-015	1.6	033187	F2B-LT10-015	1.6
	1	033088	F2B-LT7-100	1.5	033188	F2B-LT10-100	1.5
	25 mm	034261	F2B-LT7-25M	0.68	034267	F2B-LT10-25M	0.68
206	1-1/8	033089	F2B-LT7-102	2.2	033189	F2B-LT10-102	2.2
	1-3/16	033090	F2B-LT7-103	2.1	033190	F2B-LT10-103	2.1
	30 mm	034262	F2B-LT7-30M	0.95	034268	F2B-LT10-30M	0.95
207	1-1/4	033091	F2B-LT7-104	3.6	033191	F2B-LT10-104	3.6
	1-3/8	033092	F2B-LT7-106	3.3	033192	F2B-LT10-106	3.3
	1-7/16	033093	F2B-LT7-107	3.2	033193	F2B-LT10-107	3.2
	1-1/2	033094	F2B-LT7-108	3.1	033194	F2B-LTI0-108	3.1
	35 mm	034263	F2B-LT7-35M	1.5	034269	F2B-LT10-35M	1.5
209	1-11/16	033095	F2B-LT7-111	4.9	033195	F2B-LT10-111	4.9
	1-3/4	033096	F2B-LT7-112	4.7	033196	F2B-LT10-112	4.7
	40 mm	034218	F2B-LT7-40M	2.22	034270	F2B-LT10-40M	2.22
	45 mm	034264	F2B-LT7-45M	2.13	034271	F2B-LT10-45M	2.13
210	1-15/16	033097	F2B-LT7-115	5.4	033197	F2B-LT10-115	5.4
	2	033098	F2B-LT7-200	5.2	033198	F2B-LT10-200	5.2
	50 mm	034265	F2B-LT7-50M	2.36	034272	F2B-LT10-50M	2.36

Solidlube LT flange – inch

2-bolt

Series	Shaft size	A	B	C	D	F bolt dia	H	J	L	M	N
204	3/4	29/32	4-13/16	1-1/8	3-17/32	3/8	1/2	5/32	1-3/8	2-3/8	1-1/2
	20 mm	23.0	122.2	28.6	89.7	3/8	12.7	4.0	34.9	60.3	38.1
205	7/8	63/64	4-7/8	1-1/8	3-57/64	7/16	1/2	5/32	1-9/16	2-3/4	1-7/16
	15/16										
	1										
	25 mm	25.4	123.8	28.6	98.8	7/16	12.7	4.0	39.7	69.9	36.5
206	1-1/8	1-7/64	5-9/16	1-7/32	4-19/32	7/16	1/2	5/32	1-13/16	3-1/8	1-9/16
	1-3/16										
	30 mm	28.2	141.3	31.0	116.7	7/16	12.7	4.0	46.0	79.4	39.7
207	1-1/4	1-7/32	6-1/8	1-3/8	5-1/8	1/2	9/16	5/32	2-1/8	3-3/4	1-27/32
	1-3/8										
	1-7/16										
	1-1/2										
	35 mm	31.0	155.6	34.9	130.2	1/2	14.3	4.0	54.0	95.3	46.8
209	1-11/16	1-21/64	7-1/I6	1-19/32	5-27/32	1/2	5/8	3/16	2-9/16	4-3/8	1-29/32
	1-3/4										
	40 mm	33.7	179.4	40.5	148.4	1/2	15.9	4.8	65.1	111.1	48.4
	45 mm										
210	1-15/16	1-13/32	7-7/16	1-21/32	6-3/16	1/2	5/8	3/16	2-13/16	4-9/32	2-1/32
	2										
	50 mm	35.7	188.9	42.1	157.2	1/2	15.9	4.8	71.4	108.7	51.6

Solidlube LT flange – inch

4-bolt

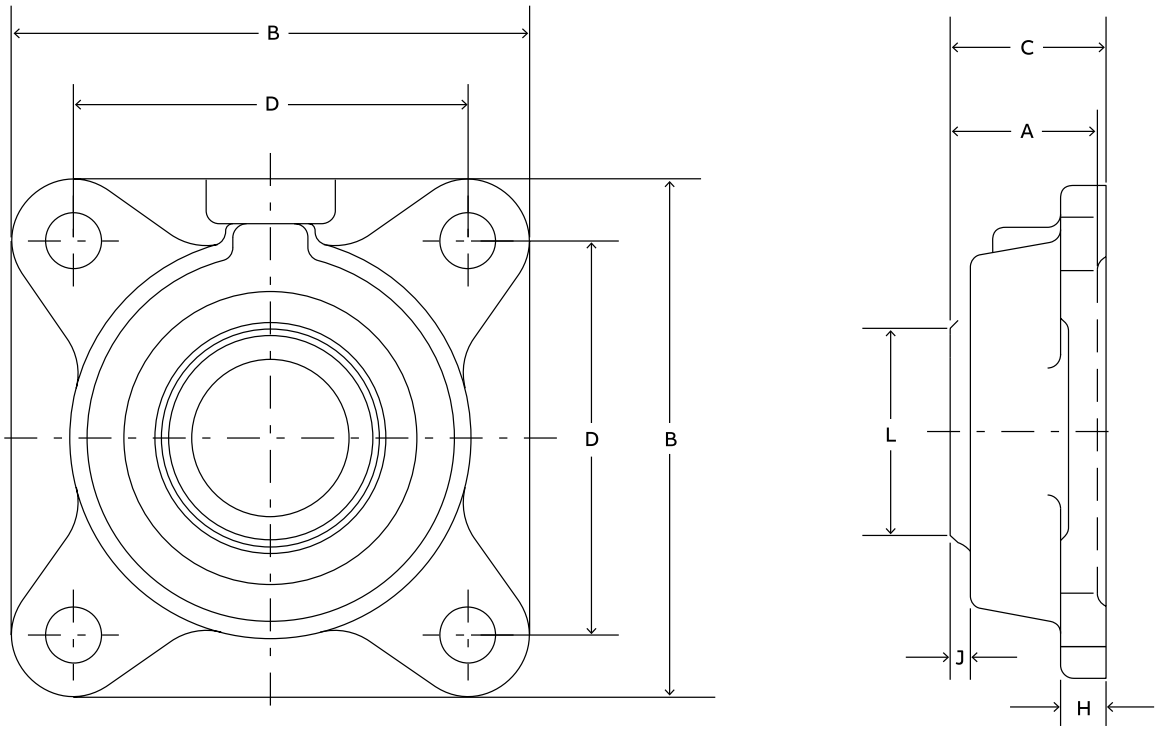

Series	Shaft size	700 series			1000 series		
		Part number	Description	Weight	Part number	Description	Weight
204	3/4	033085	F2B-LT7-012	1.2	033185	F2B-LT10-012	1.2
	20 mm	034260	F2B-LT7-20M	0.54	034266	F2B-LT10-20M	0.54
205	7/8	033086	F2B-LT7-014	1.7	033186	F2B-LT10-014	1.7
	15/16	033087	F2B-LT7-015	1.6	033187	F2B-LT10-015	1.6
	1	033088	F2B-LT7-100	1.5	033188	F2B-LT10-100	1.5
	25 mm	034261	F2B-LT7-25M	0.68	034267	F2B-LT10-25M	0.68
206	1-1/8	033089	F2B-LT7-102	2.2	033189	F2B-LT10-102	2.2
	1-3/16	033090	F2B-LT7-103	2.1	033190	F2B-LT10-103	2.1
	30 mm	034262	F2B-LT7-30M	0.95	034268	F2B-LT10-30M	0.95
207	1-1/4	033091	F2B-LT7-104	3.6	033191	F2B-LT10-104	3.6
	1-3/8	033092	F2B-LT7-106	3.3	033192	F2B-LT10-106	3.3
	1-7/16	033093	F2B-LT7-107	3.2	033193	F2B-LT10-107	3.2
	1-1/2	033094	F2B-LT7-108	3.1	033194	F2B-LTI0-108	3.1
	35 mm	034263	F2B-LT7-35M	1.5	034269	F2B-LT10-35M	1.5
209	1-11/16	033095	F2B-LT7-111	4.9	033195	F2B-LT10-111	4.9
	1-3/4	033096	F2B-LT7-112	4.7	033196	F2B-LT10-112	4.7
	40 mm	034218	F2B-LT7-40M	2.22	034270	F2B-LT10-40M	2.22
	45 mm	034264	F2B-LT7-45M	2.13	034271	F2B-LT10-45M	2.13
210	1-15/16	033097	F2B-LT7-115	5.4	033197	F2B-LT10-115	5.4
	2	033098	F2B-LT7-200	5.2	033198	F2B-LT10-200	5.2
	50 mm	034265	F2B-LT7-50M	2.36	034272	F2B-LT10-50M	2.36

Solidlube LT flange – inch

4-bolt

Series	Shaft size	A	B	C	D	F bolt dia	H	J	L	M	N
204	3/4	29/32	4-13/16	1-1/8	3-17/32	3/8	1/2	5/32	1-3/8	2-3/8	1-1/2
	20 mm	23.0	122.2	28.6	89.7	3/8	12.7	4.0	34.9	60.3	38.1
205	7/8	63/64	4-7/8	1-1/8	3-57/64	7/16	1/2	5/32	1-9/16	2-3/4	1-7/16
	15/16										
	1										
	25 mm	25.4	123.8	28.6	98.8	7/16	12.7	4.0	39.7	69.9	36.5
206	1-1/8	1-7/64	5-9/16	1-7/32	4-19/32	7/16	1/2	5/32	1-13/16	3-1/8	1-9/16
	1-3/16										
	30 mm	28.2	141.3	31.0	116.7	7/16	12.7	4.0	46.0	79.4	39.7
207	1-1/4	1-7/32	6-1/8	1-3/8	5-1/8	1/2	9/16	5/32	2-1/8	3-3/4	1-27/32
	1-3/8										
	1-7/16										
	1-1/2										
	35 mm	31.0	155.6	34.9	130.2	1/2	14.3	4.0	54.0	95.3	46.8
209	1-11/16	1-21/64	7-1/16	1-19/32	5-27/32	1/2	5/8	3/16	2-9/16	4-3/8	1-29/32
	1-3/4										
	40 mm	33.7	179.4	40.5	148.4	1/2	15.9	4.8	65.1	111.1	48.4
	45 mm										
210	1-15/16	1-13/32	7-7/16	1-21/32	6-3/16	1/2	5/8	3/16	2-13/16	4-9/32	2-1/32
	2										
	50 mm	35.7	188.9	42.1	157.2	1/2	15.9	4.8	71.4	108.7	51.6

Solidlube LT take-up – inch

Narrow-slot (NS)

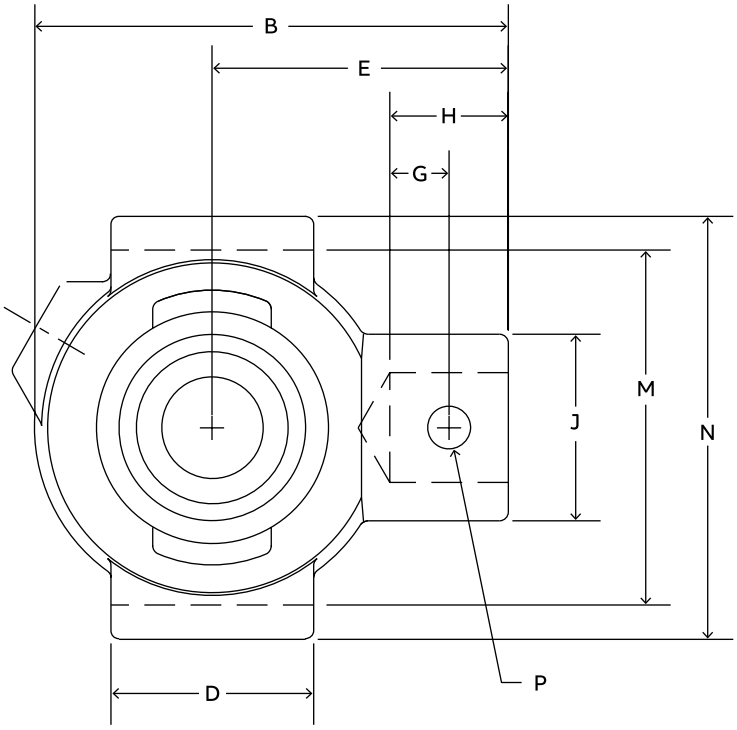

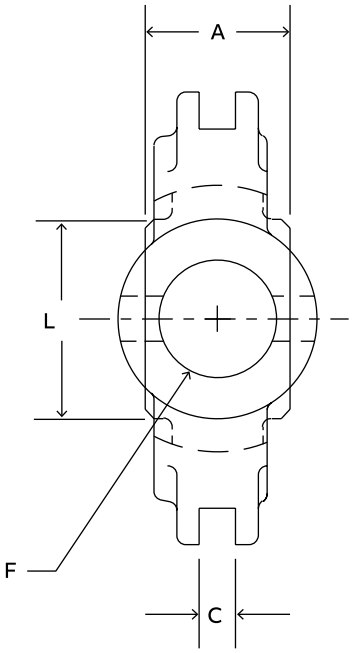

Series	Shaft size	LT700			LT1000			Used on frame
		Part number	Description	Weight	Part number	Description	Weight	
204	3/4	033810	NSTU-LT7-012	1.7	033840	NSTU-LT10-012	1.7	NS-210
	20 mm	034293	NSTU-LT7-20M	0.77	034303	NSTU-LT10-20M	0.77	NS-210
205	7/8	033811	NSTU-LT7-014	1.9	033841	NSTU-LT10-014	1.9	NS-210
	15/16	033812	NSTU-LT7-015	1.8	033842	NSTU-LT10-015	1.8	
	1	033813	NSTU-LT7-100	1.7	033843	NSTU-LT10-100	1.7	
	25 mm	034294	NSTU-LT7-25M	0.77	034304	NSTU-LT10-25M	0.77	NS-210
206	1-1/8	033814	NSTU-LT7-102	2.8	033844	NSTU-LT10-102	2.8	NS-308
	1-3/16	033815	NSTU-LT7-103	2.7	033845	NSTU-LT10-103	2.7	
	30 mm	034295	NSTU-LT7-30M	1.22	034305	NSTU-LT10-30M	1.22	NS-308
207	1-1/4	033816	NSTU-LT7-104	3.2	033846	NSTU-LT10-104	3.2	NS-308
	1-3/8	033817	NSTU-LT7-106	3.0	033847	NSTU-LT10-106	3.0	
	1-7/16	033818	NSTU-LT7-107	2.9	033848	NSTU-LT10-107	2.9	
	1-1/2	033819	NSTU-LT7-108	2.8	033849	NSTU-LT10-108	2.8	
	35 mm	034296	NSTU-LT7-35M	1.36	034306	NSTU-LT10-35M	1.36	NS-308
209	1-11/16	033820	NSTU-LT7-111	4.9	033850	NSTU-LT10-111	4.9	NS-400
	1- 3/4	033821	NSTU-LT7-112	4.8	033851	NSTU-LT10-112	4.8	
	40 mm	034297	NSTU-LT7-40M	2.22	034307	NSTU-LT10-40M	2.22	NS-400
	45 mm	034298	NSTU-LT7-45M	2.18	034308	NSTU-LT10-45M	2.18	
210	1-15/16	033822	NSTU-LT7-115	5.5	033852	NSTU-LT10-115	5.5	NS-400
	2	033823	NSTU-LT7-200	5.3	033853	NSTU-LT10-200	5.3	
	50 mm	034299	NSTU-LT7-50M	2.4	034309	NSTU-LT10-50M	2.4	NS-400
211	2-3/16	033824	NSTU-LT7-203	6.7	033854	NSTU-LT10-203	6.7	NS-407
212	2-7/16	033825	NSTU-LT7-207	7.4	033855	NSTU-LT10-207	7.4	NS-415
	2-1/2	033826	NSTU-LT7-208	7.0	033856	NSTU-LT10-208	7.0	
	60 mm	034300	NSTU-LT7-60M	3.18	034310	NSTU-LT10-60M	3.18	NS-415

Solidlube LT take-up – inch

Narrow-slot (NS)

Series	Shaft size	A	B	C	D	E	F Screw dia.	G
204	3/4	1	3-1/2	1/4	1-1/2	2-3/16	3/4	7/16
	20 mm	25.4	88.9	6.4	38.1	55.6	3/4	11.1
205	7/8, 15/16, 1	1-1/16	3-9/16	1/4	1-1/2	2-3/16	3/4	7/16
	25 mm	27	90.5	6.4	38.1	55.6	3/4	11.1
206	1-1/8	1-3/16	4-5/16	1/4	2-1/2	2-11/16	3/4	7/16
	1-3/16							
	30 mm	30.2	109.5	6.4	63.5	68.3	3/4	11.1
207	1-1/4, 1-3/8,	1-5/16	4-1/2	1/4	2-1/2	2-11/16	3/4	7/16
	1-7/16, 1-1/2							
	35 mm	33.3	114.3	6.4	63.5	68.3	3/4	11.1
209	1-11/16, 1-3/4	1- 9/16	5- 7/16	5/16	3	3-1/4	7/8	1/2
	40 mm	39.7	138.1	7.9	76.2	82.6	7/8	12.7
	45 mm							
210	1-15/16, 2	1- 5/8	5- 1/2	5/16	3	3-1/4	7/8	1/2
	50 mm	41.3	139.7	7.9	76.2	82.6	7/8	12.7
211	2-3/16	1- 3/4	6- 1/8	5/16	3-1/2	3-5/8	1	19/32
212	2-7/16, 2-1/2	1-13/16	6-11/16	5/16	3-3/4	3-7/8	1	19/32
	60 mm	46	169.9	7.9	95.3	95.3	1	15.1

Series	Shaft size	H	J	L	M	N	P Pin dia.
204	3/4	7/8	1-3/8	1-3/8	2-5/8	3-1/8	5/16
	20 mm	22.2	34.9	34.9	66.7	79.4	5/16
205	7/8, 15/16, 1	7/8	1-3/8	1-9/16	2-5/8	3-1/8	5/16
	25 mm	22.2	34.9	39.7	66.7	79.4	5/16
206	1-1/8	15/16	1-3/8	1-13/16	3-1/2	4-1/8	5/16
	1-3/16						
	30 mm	23.8	34.9	46.0	88.9	104.8	5/16
207	1-1/4, 1-3/8,	15/16	1-3/8	2-1/8	3-1/2	4-1/8	5/16
	1-7/16, 1-1/2						
	35 mm	23.8	34.9	54.0	88.9	104.8	5/16
209	1-11/16, 1-3/4	1-7/32	1-5/8	2-9/16	4	4-3/4	3/8
	40 mm	31.0	41.3	65.1	101.6	120.7	3/8
	45 mm						
210	1-15/16, 2	1-3/32	1-5/8	2-13/16	4	4-3/4	3/8
	50 mm	27.8	41.3	71.4	101.6	120.7	3/8
211	2-3/16	1-9/32	1-5/8	3- 1/2	4-15/16	5-3/4	7/16
212	2-7/16, 2-1/2	1-9/32	1-3/4	3-1/8	4-7/16	5-3/8	7/16
	60 mm	32.5	41.3	88.9	125.4	146.1	7/16

Solidlube LT take-up – inch

Wide-slot (WS)

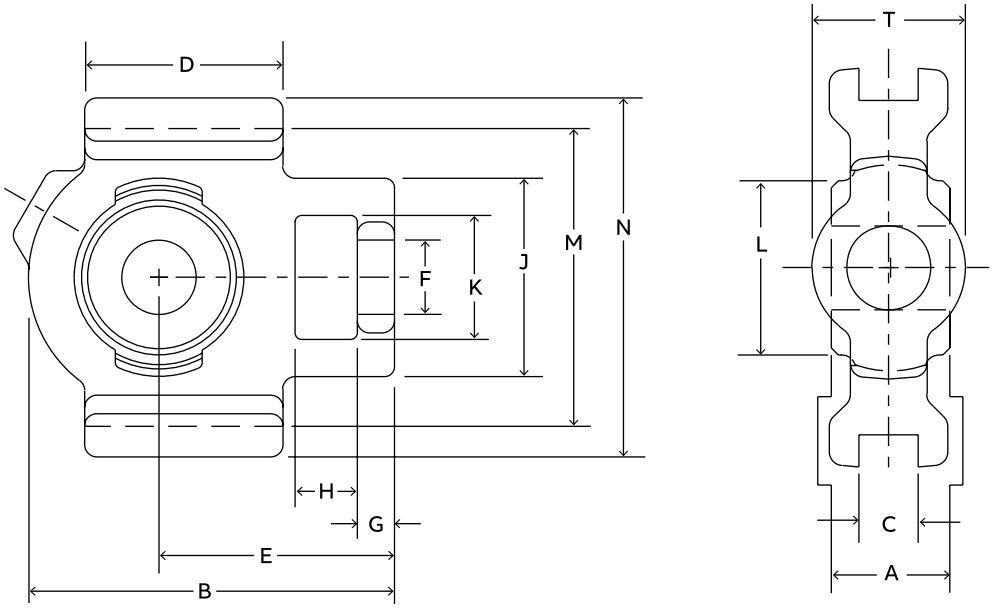

Series	Shaft size	LT700			LT1000			Used on frame
		Part number	Description	Weight	Part number	Description	Weight	
204	3/4	033870	WSTU-LT7-012	2.4	033910	WSTU-LT10-012	2.4	WS-300
	20 mm	034313	WSTU-LT7-20M	1.09	034323	WSTU-LT10-20M	1.09	WS-300
205	7/8	033871	WSTU-LT7-014	2.6	033911	WSTU-LT10-014	2.6	WS-300
	15/16	033872	WSTU-LT7-015	2.5	033912	WSTU-LT10-015	2.5	
	1	033873	WSTU-LT7-100	2.4	033913	WSTU-LT10-100	2.4	
	25 mm	034314	WSTU-LT7-25M	1.09	034324	WSTU-LT10-25M	1.09	WS-300
206	1-1/8	033874	WSTU-LT7-102	3.2	033914	WSTU-LT10-102	3.2	WS-308
	1-3/16	033875	WSTU-LT7-103	3.1	033915	WSTU-LT10-103	3.1	
	30 mm	034315	WSTU-LT7-30M	1.41	034325	WSTU-LT10-30M	1.41	WS-308
207	1-1/4	033876	WSTU-LT7-104	4.2	033916	WSTU-LT10-104	4.2	WS-308
	1-3/8	033877	WSTU-LT7-106	3.9	033917	WSTU-LT10-106	3.9	
	1-7/16	033878	WSTU-LT7-107	3.8	033918	WSTU-LT10-107	3.8	
	1-1/2	033879	WSTU-LT7-108	3.7	033919	WSTU-LT10-108	3.7	
	35 mm	034316	WSTU-LT7-35M	1.77	034326	WSTU-LT10-35M	1.77	WS-308
209	1-11/16	033880	WSTU-LT7-111	6.1	033920	WSTU-LT10-111	6.1	WS-400
	1- 3/4	033881	WSTU-LT7-112	6	033921	WSTU-LT10-112	6	
	40 mm	034317	WSTU-LT7-40M	2.77	034327	WSTU-LT10-40M	2.77	WS-400
	45 mm	034318	WSTU-LT7-45M	2.72	034328	WSTU-LT10-45M	2.72	
210	1-15/16	033882	WSTU-LT7-115	6.7	033922	WSTU-LT10-115	6.7	WS-400
	2	033883	WSTU-LT7-200	6.5	033923	WSTU-LT10-200	6.5	
	50 mm	034319	WSTU-LT7-50M	2.95	034329	WSTU-LT10-50M	2.95	WS-400
211	2-3/16	033884	WSTU-LT7-203	9.8	033924	WSTU-LT10-203	9.8	WS-502
212	2-7/16	033885	WSTU-LT7-207	10.1	033925	WSTU-LT10-207	10.1	WS-502
	2-1/2	033886	WSTU-LT7-208	9.8	033926	WSTU-LT10-208	9.8	
	60 mm	034320	WSTU-LT7-60M	4.58	034330	WSTU-LT10-60M	4.58	WS-502
215	2-15/16	033887	WSTU-LT7-215	13	033927	WSTU-LT10-215	13	WS-515
	3	033888	WSTU-LT7-300	12.5	033928	WSTU-LT10-300	12.5	
	70 mm	034321	WSTU-LT7-70M	5.9	034331	WSTU-LT10-70M	5.9	WS-515
	75 mm	034322	WSTU-LT7-75M	5.67	034332	WSTU-LT10-75M	5.67	

Solidlube LT take-up – inch

Wide-slot (WS)

Series	Shaft size	A	B	C	D	E	F dia.	G
204	3/4	1	3-11/16	17/32	2	2-3/8	3/4	3/8
	20 mm	25.4	93.7	13.5	50.8	60.3	3/4	9.5
205	7/8, 15/16, 1	1-1/16	3-13/16	17/32	2	2-7/16	13/16	3/8
	25 mm	27.0	96.8	13.5	50.8	61.9	13/16	9.5
206	1-1/8, 1-3/16	1- 3/16	4- 3/8	17/32	2-1/4	2-3/4	7/8	3/8
	30 mm	30.2	111.1	13.5	57.2	69.9	7/8	9.5
207	1-1/4, 1-3/8 1-7/16, 1-1/2	1- 5/16	4- 7/8	17/32	2-1/2	3-1/16	7/8	1/2
	35 mm	33.3	123.8	13.5	63.5	77.8	7/8	23.7
209	1-11/16, 1-3/4	1- 9/16	5- 5/8	11/16	3-1/4	3-7/16	1-1/8	5/8
	40 mm, 45 mm	39.7	142.9	17.5	82.6	87.3	1-1/8	15.9
210	1-15/16, 2	1-5/8	5-13/16	11/16	3-3/8	3-9/16	1-1/8	5/8
	50 mm	41.3	147.6	17.5	85.7	90.5	1-1/8	15.9
211	2-3/16	1-3/4	6-11/16	1-1/16	3-3/4	4-3/16	1-3/8	3/4
212	2-7/16, 2-1/2	1-13/16	7-1/2	1-1/16	4	4-11/16	1-3/8	3/4
	60 mm	46.0	190.5	27.0	101.6	119.1	1-3/8	19.1
215	2-15/16, 3	2-23/32	9-1/8	1-1/16	4-3/4	5-1/2	1-9/16	13/16
	70 mm, 75 mm	69.1	231.8	27.0	120.7	139.7	1-9/16	20.6

Series	Shaft size	H	J	K	L	M	N	T
204	3/4	5/8	2	1-1/4	1-3/8	3	3-5/8	1-3/8
	20 mm	15.9	50.8	31.8	34.9	76.2	92.1	34.9
205	7/8, 15/16, 1	5/8	2	1-5/16	1-9/16	3	3-5/8	1-3/8
	25 mm	15.9	50.8	33.3	39.7	76.2	92.1	34.9
206	1-1/8, 1-3/16	5/8	2-3/16	1-7/16	1-13/16	3-1/2	4-1/8	1-5/8
	30 mm	15.9	55.6	36.5	46.0	88.9	104.8	41.3
207	1-1/4, 1-3/8 1-7/16, 1-1/2	5/8	2-1/2	1-7/16	2-1/8	3-1/2	4-1/8	1-5/8
	35 mm	15.9	63.5	36.5	54.0	88.9	104.8	41.3
209	1-11/16, 1-3/4	3/4	3-1/4	1-15/16	2-9/16	4	4-3/4	1-15/16
	40 mm, 45 mm	19.1	82.6	49.2	65.1	101.6	120.7	49.2
210	1-15/16, 2	3/4	3-1/4	1-15/16	2-13/16	4	4-3/4	1-15/16
	50 mm	19.1	82.6	49.2	71.4	101.6	120.7	49.2
211	2-3/16	1	4	2-1/2	3-1/8	5-1/8	5-7/8	2-1/2
212	2-7/16, 2-1/2	1-1/4	4	2-1/2	3-1/2	5-1/8	5-7/8	2-1/2
	60 mm	31.8	101.6	63.5	88.9	130.2	149.2	63.5
215	2-15/16, 3	1-1/4	4-3/8	2-3/4	3-15/16	5-15/16	6-11/16	2-3/4
	70 mm, 75 mm	31.8	111.1	69.9	100.0	150.8	169.9	69.9

Solidlube LT take-up – inch

Top-angle (TP)

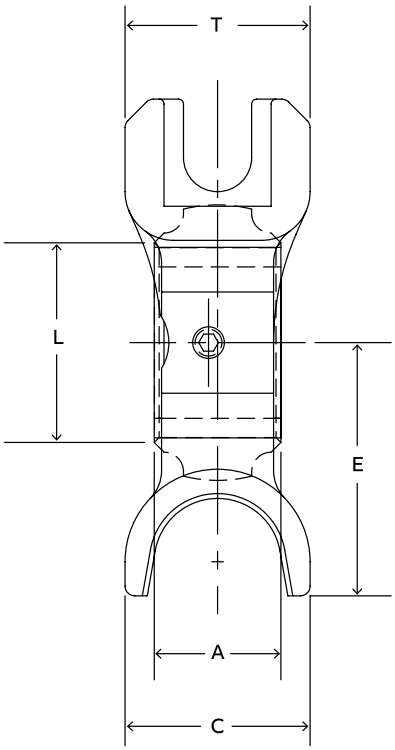

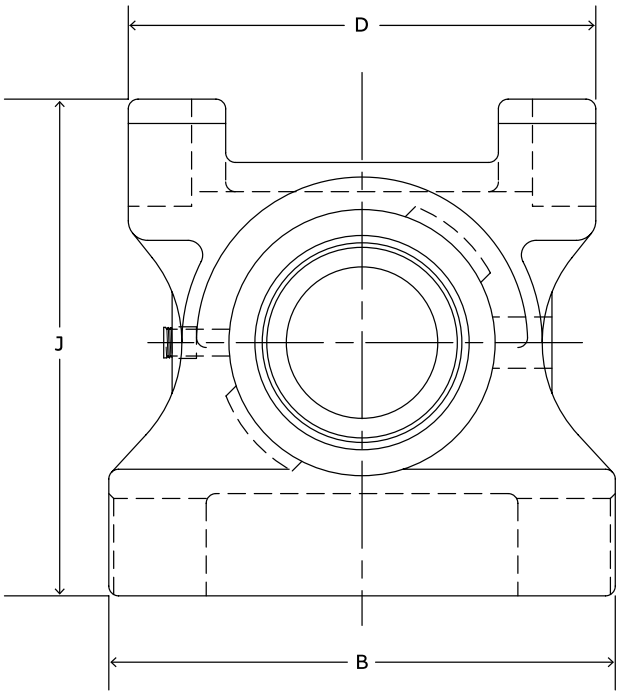

Solidlube LT take-up – inch

Top-angle (TP)

Shaft size	700 Series		1000 Series		Weight	Frame size
	Part number	Description	Part number	Description		
1-15/16	033739	TP-GLT7-115	033750	TP-GLT10-115	10.1	TP10
2	033740	TP-GLT7-200	033751	TP-GLT10-200		
2-3/16	033741	TP-GLT7-203	033752	TP-GLT10-203	11.8	TP20
2-7/16	033742	TP-GLT7-207	033753	TP-GLT10-207	14.1	TP30
2-1/2	033743	TP-GLT7-208	033754	TP-GLT10-208		
2-15/16	033744	TP-GLT7-215	033755	TP-GLT10-215	17.0	TP40
3	033745	TP-GLT7-300	033756	TP-GLT10-300		

Shaft size	A	B	C	D	E	J	L	T
1-15/16	1-5/8	6-1/2	2-3/8	6	3-1/4	6-3/8	2-13/16	2-3/8
2								
2-3/16	1-3/4	7	2-1/2	6-3/4	3-3/8	6-7/8	3-1/8	2-3/8
2-7/16	1-13/16	7-1/2	2-3/4	7	3-1/2	7-7/16	3-1/2	2-3/4
2-1/2								
2-15/16	2-23/32	8-1/2	2-1/2	8	4	8-5/16	3-15/16	2-3/4
3								

Solidlube LT bearing insert – inch

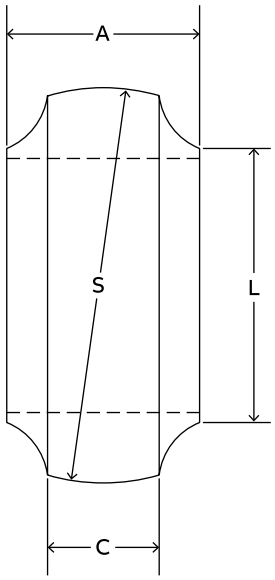

Series	Shaft size	700 series			1000 series		
		Part number	LT700 Series description	Weight	Part number	LT1000 Series description	Weight
204	3/4	033585	INS-LT7-012	0.30	033610	INS-LT10-012	0.30
	20 mm	034454	INS-LT7-20M	0.14	034455	INS-LT10-20M	0.14
205	7/8	033586	INS-LT7-014	0.50	033611	INS-LT10-014	0.50
	15/16	033587	INS-LT7-015	0.40	033612	INS-LT10-015	0.40
	1	033588	INS-LT7-100	0.30	033613	INS-LT10-100	0.30
	25 mm	034456	INS-LT7-25M	0.14	034457	INS-LT10-25M	0.14
206	1-1/8	033589	INS-LT7-102	0.70	033614	INS-LT10-102	0.70
	1-3/16	033590	INS-LT7-103	0.60	033615	INS-LT10-103	0.60
	30 mm	034458	INS-LT7-30M	0.32	034459	INS-LT10-30M	0.32
207	1-1/4	033591	INS-LT7-104	1.20	033616	INS-LT10-104	1.20
	1-3/8	033592	INS-LT7-106	1.00	033617	INS-LT10-106	1.00
	1-7/16	033593	INS-LT7-107	0.90	033618	INS-LT10-107	0.90
	1-1/2	033594	INS-LT7-108	0.80	033619	INS-LT10-108	0.80
	35 mm	034460	INS-LT7-35M	0.45	034461	INS-LT10-35M	0.45
209	1-11/16	033595	INS-LT7-111	1.60	033620	INS-LT10-111	1.60
	1-3/4	033596	INS-LT7-112	1.40	033621	INS-LT10-112	1.40
	40 mm	034462	INS-LT7-40M	0.73	034463	INS-LT10-40M	0.73
	45 mm	034464	INS-LT7-45M	0.64	034465	INS-LT10-45M	0.64
210	1-15/16	033597	INS-LT7-115	1.80	033622	INS-LT10-115	1.80
	2	033598	INS-LT7-200	1.60	033623	INS-LT10-200	1.60
	50 mm	034466	INS-LT7-50M	0.73	034467	INS-LT10-50M	0.73
211	2-3/16	033599	INS-LT7-203	2.30	033624	INS-LT10-203	2.30
212	2-7/16	033600	INS-LT7-207	3.20	033625	INS-LT10-207	3.20
	2-1/2	033601	INS-LT7-208	3.00	033626	INS-LT10-208	3.00
	60 mm	034468	INS-LT7-60M	1.45	034469	INS-LT10-60M	1.45
215	2-15/16	033602	INS-LT7-215	5.80	033627	INS-LT10-215	5.80
	3	034117	INS-LT7-300	5.50	034525	INS-LT10-300	5.50
	70 mm	034470	INS-LT7-70M	2.50	034471	INS-LT10-70M	2.50
	75 mm	034472	INS-LT7-75M		034473	INS-LT10-75M	

Solidlube LT bearing insert – inch

Series	Shaft size	A	C	L	S
204	3/4	1	5/8	1-3/8	1.8445/1.8425
	20 mm	25.4	15.9	34.9	46.850 / 46.800
205	7/8	1-1/16	5/8	1-9/16	2.0415/2.0395
	15/16				
	1				
	25 mm	27.0	15.9	39.7	51.854 / 51.803
206	1-1/8	1-3/16	11/16	1-13/16	2.435/2.433
	1-3/16				
	30 mm	30.2	17.5	46.0	61.849 / 61.798
207	1-1/4	1-5/16	13/16	2-1/8	2.829/2.827
	1-3/8				
	1-7/16				
	1-1/2				
	35 mm	33.3	20.6	54.0	71.857 / 71.806
209	1-11/16	1-9/16	13/16	2-9/16	3.3415/3.3395
	1-3/4				
	40 mm	39.7	20.6	65.1	84.874 / 84.823
	45 mm				
210	1-15/16	1-5/8	7/8	2-13/16	3.5375/3.5355
	2				
	50 mm	41.3	22.2	71.4	89.853 / 89.802
211	2-3/16	1-3/4	15/16	3-1/8	3.932/3.930
212	2-7/16	1-13/16	1-1/16	3-1/2	4.326/4.324
	2-1/2				
	60 mm	46.0	27.0	88.9	109.880 / 109.830
215	2-15/16	2-23/32	1-3/16	3-15/16	5.1135/5.1115
	3				
	70 mm	69.1	30.2	100.0	129.883 / 129.832
	75 mm				

Solidlube MM bearing insert – inch

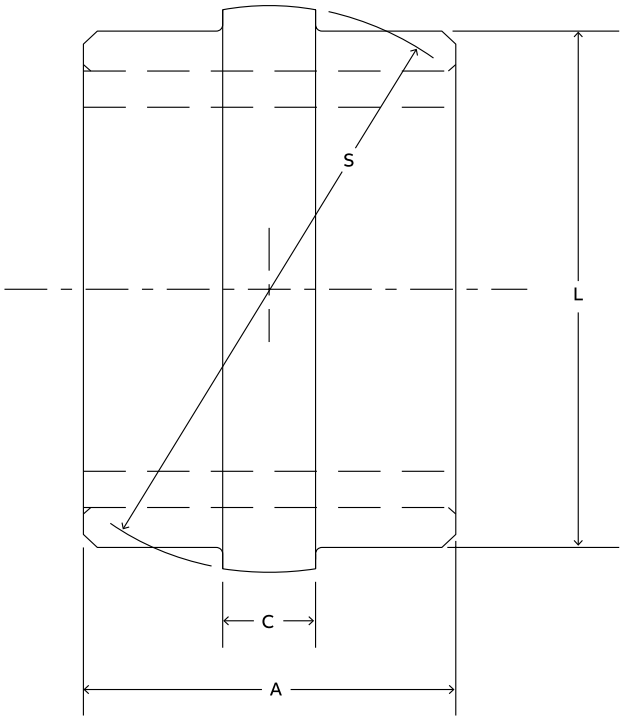

Shaft size	700 series		1000 series		Weight	A	C	L	S
	Part number	Description	Part number	Description				dia.	spherical dia.
3-7/16	034438	INS-MM7-307	034439	INS-MM10-307	6.4	3-1/2	7/8	4-7/8	5.182/5.180
3-1/2	034440	INS-MM7-308	034441	INS-MM10-308	6.2				
3-15/16	034442	INS-MM7-315	034443	INS-MM10-315	10.0	4	1-1/8	5-5/8	6.057/6.055
4	034444	INS-MM7-400	034445	INS-MM10-400	9.8				
4-7/16	034446	INS-MM7-407	034447	INS-MM10-407	20.0	4-1/2	1-1/4	6-15/16	7.370/7.367
4-1/2	034448	INS-MM7-408	034449	INS-MM10-408	19.7				
4-15/16	034450	INS-MM7-415	034451	INS-MM10-415	27.0	5	1-3/8	7-9/16	7.995/7.992
5	034452	INS-MM7-500	034453	INS-MM10-500	26.5				

Solidlube LT cylindrical units – inch

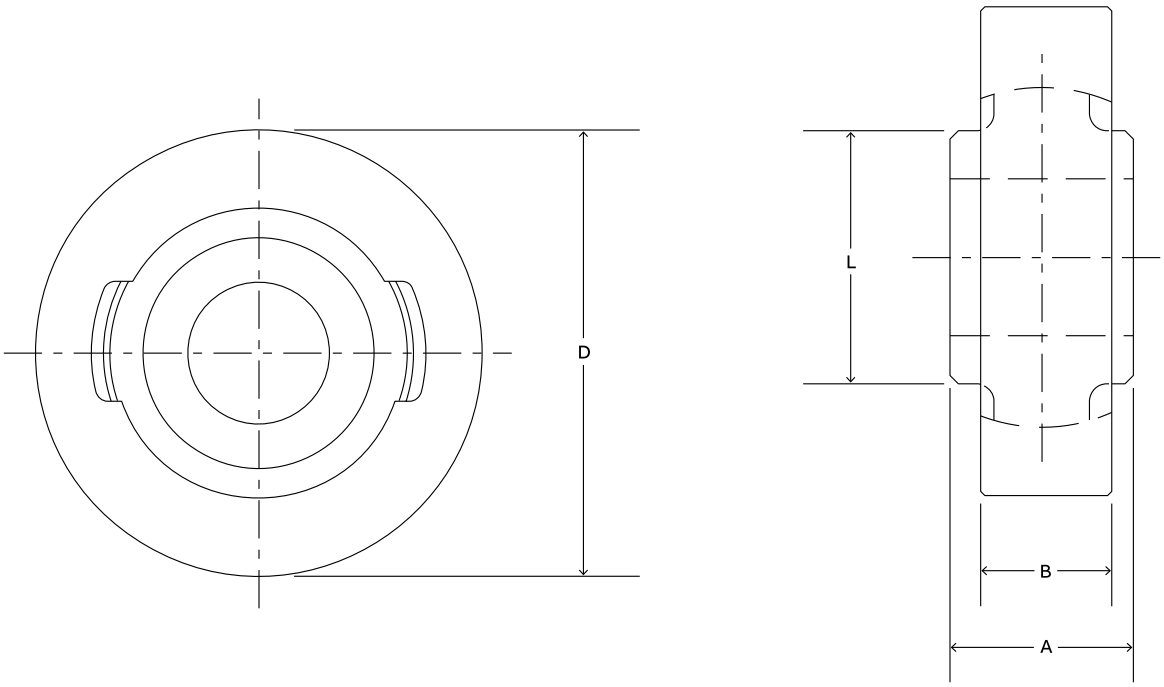

Shaft size	LT700			LT1000			A	B	D dia.	L
	Part number	Description	Weight	Part number	Description	Weight			+000 -.002	
7/8	033961	CYL-LT7-014	1.5	422596	CYL-LT10-014	1.5	1-1/16	27/32	3-1/8	1- 9/16
15/16	033960	CYL-LT7-015		422595	CYL-LT10-015					
1	033962	CYL-LT7-100		422597	CYL-LT10-100					
1-1/8	033963	CYL-LT7-102	29.0	492598	CYL-LT10-102	2.9	1-3/16	15/16	3-1/2	1-13/16
1-3/16	033964	CYL-LT7-103		422599	CYL-LT10-103					
1-1/4	033965	CYL-LT7-104	3.0	422600	CYL-LT10-104	3.0	1- 5/16	1-1/16	3-7/8	2-1/8
1-3/8	033966	CYL-LT7-106		422601	CYL-LT10-106					
1-7/16	033967	CYL-LT7-107		422602	CYL-LT10-107					
1-1/2	033968	CYL-LT7-108		422603	CYL-LT10-108					

Note: No published metric dimensions for this product.

Solidlube LT screw conveyor hanger bearing – inch

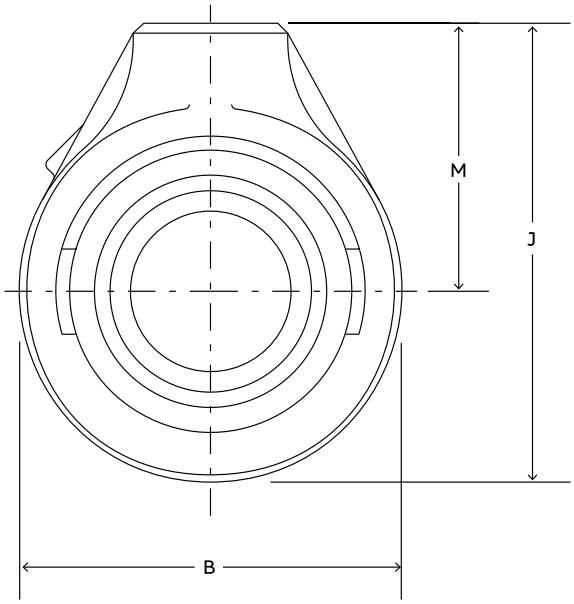

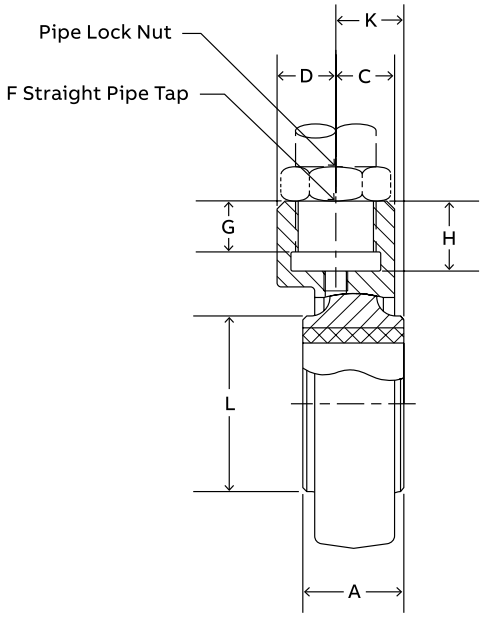

Series	Shaft size	LT700 series			LT1000 series		
		Part number	Description	Weight	Part number	Description	Weight
210	1-15/16	033937	SCHB-LT7-115	5.8	033952	SCHB-LT10-115	1.9
	2	033938	SCHB-LT7-200	5.7	033953	SCHB-LT10-200	2.0
212	2-7/16	033939	SCHB-LT7-207	7.1	033954	SCHB-LT10-207	5.0
	2-1/2	033940	SCHB-LT7-208	7.0	033955	SCHB-LT10-208	4.8

Series	Shaft size	A	B	C	D	F#	G	H	J	K	L	M
210	1-15/16	1-5/8	4-5//8	7/8	15/16	1	13/16	1-1/8	5-9/16	1-3/32	2-13/16	3-1/4
	2											
212	2-7/16	1-13/16	5-1/2	1-5/32	1-5/32	1-1/4	1-1/8	1-7/16	6-3/4	1-1/4	3-1/2	4
	2-1/2											

Note: No published Metric dimensions for this product.

Solidlube LT hanger bearing – inch

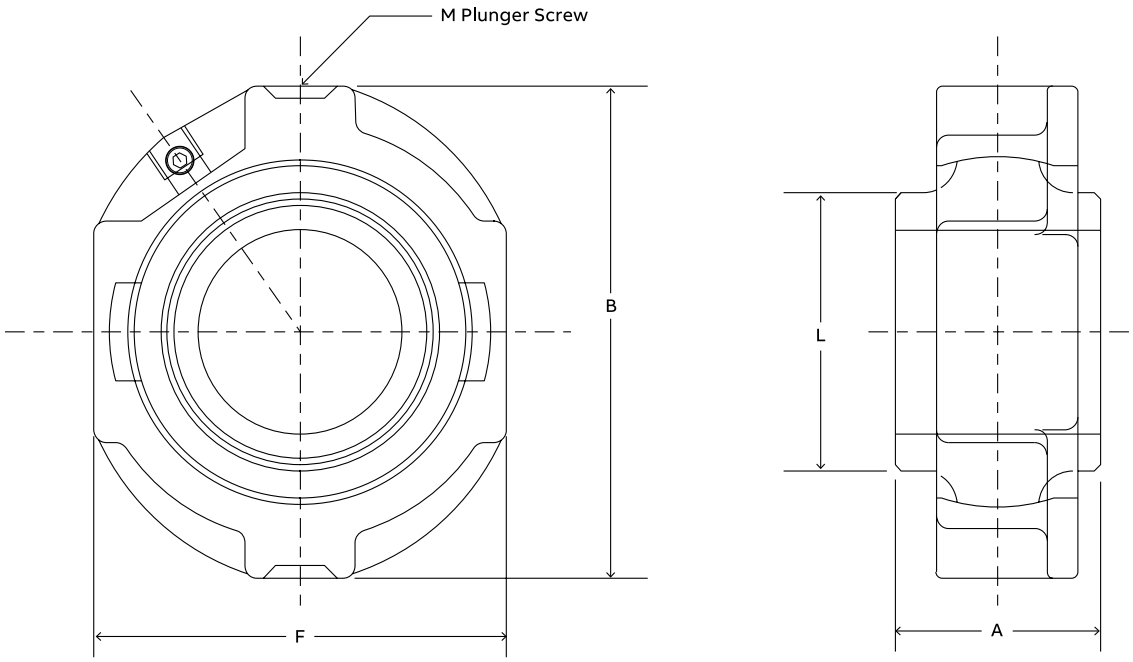

Shaft size	LT700		LT1000		Weight	A	B	F	L	M
	Part number	Description	Part number	Description						
1-1/8	033890	HNG-LT7-102	033900	HNG-LT10-102	1.9	1-3/16	3-5/8	3	1-13/16	1/2
1-3/16	033891	HNG-LT7-103	033901	HNG-LT10-103	2.0					
1-1/4	033892	HNG-LT7-104	033902	HNG-LT10-104	3.1	1-5/16	4-1/4	3-1/2	2-1/8	1/2
1-3/8	033893	HNG-LT7-106	033903	HNG-LT10-106	3.0					
1-7/16	033894	HNG-LT7-107	033904	HNG-LT10-107	2.9					
1-1/2	033895	HNG-LT7-108	033905	HNG-LT10-108	2.8					
1-15/16	033896	HNG-LT7-115	033906	HNG-LT10-115	5.0	1-5/8	5	4-3/16	2-13/16	5/8
2	033897	HNG-LT7-200	033907	HNG-LT10-200	4.8					

Note: No published metric dimensions for this product.

Solidlube LM800 pillow block – inch

2-bolt

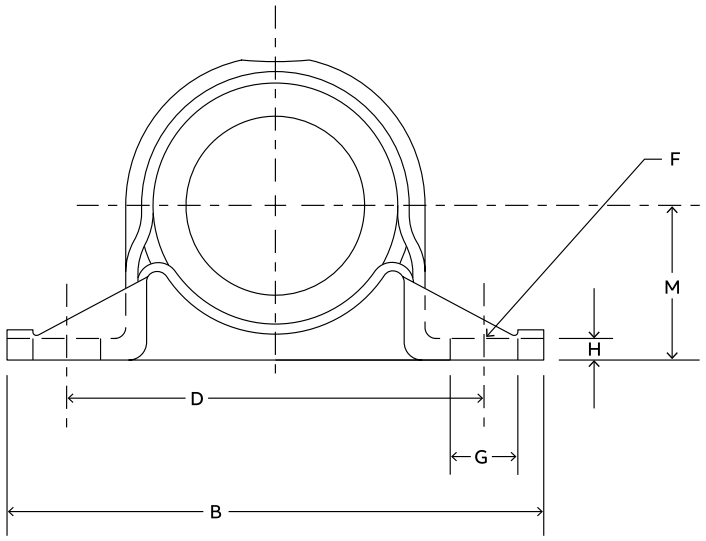

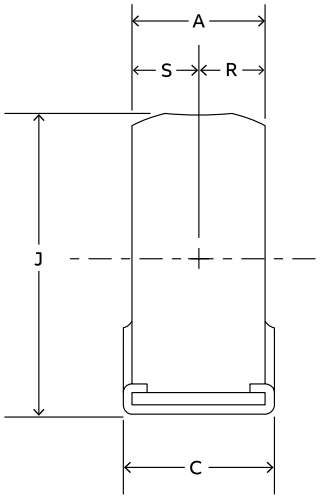

Shaft size	Part number	Description	Weight	A	B	C	D	F bolt dia.	G	H	J	M	R	S
3/4	033692	P2B-LM8-012	0.70	1	4	1-7/32	3	3/8	9/16	5/32	2-1/16	1-1/16	1/2	1/2
1	033693	P2B-LM8-100	0.22											
1-1/4	033694	P2B-LM8-104	0.70	1-1/8	4-1/2	1-11/32	3-1/2	3/8	9/16	5/32	2-9/16	1-5/16	9/16	9/16
1-1/2	033695	P2B-LM8-108	0.50											

Note: No published Metric dimensions for this product.

Solidlube LM800 flange – inch

4-bolt

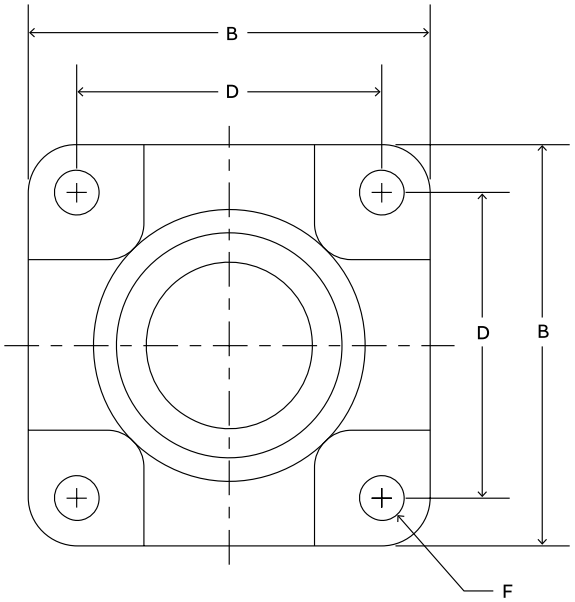

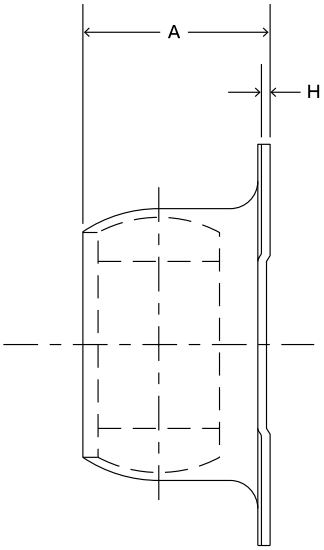

Shaft size	Part number	Description	Weight	A	B	D	F bolt dia.	H
3/4	033696	F4B-LM8-012	0.50	1-9/32	3-1/8	2-1/4	3/8	1/16
1	033697	F4B-LM8-100	0.36					
1-1/4	033698	F4B-LM8-104	0.50	1-11/16	3-5/8	2-3/4	3/8	1/16
1-1/2	033699	F4B-LM8-108	0.50					

Note: No published metric dimensions for this product.

Solidlube shaft collars – inch

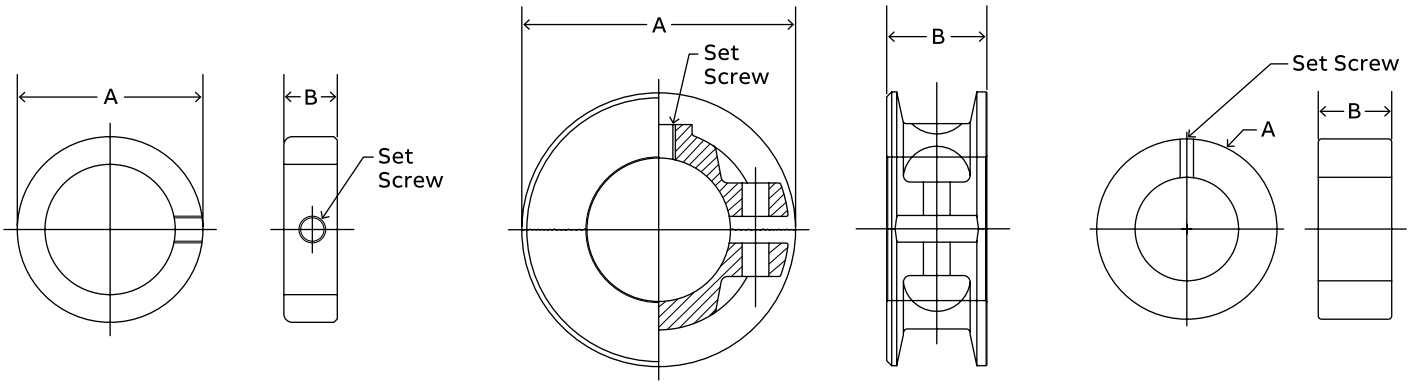

Solid Steel

Shaft size	Part number *		Dimensions			
	Steel	Stainless	OD (A)	Width (B)	Screw	Wt.
1/8	—	456225	0.36	0.25	#6	0.01
3/16	040001	456226	0.44	0.25	#8	0.01
1/4	040002	456227	0.50	0.28	#10	0.01
5/16	040003	456228	0.63	0.34	#10	0.01
3/8	040004	456229	0.75	0.38	1/4	0.01
7/16	040005	—	0.88	0.44	1/4	0.05
1/2	040006	456230	1.00	0.44	1/4	0.1
9/16	040007	—	1.00	0.44	1/4	0.1
5/8	040008	456231	1.13	0.50	5/16	0.1
11/16	040009	—	1.25	0.56	5/16	0.1
3/4	040010	456232	1.25	0.56	5/16	0.1
13/16	040011	—	1.31	0.56	5/16	0.1
7/8	040012	456234	1.50	0.56	5/16	0.2
15/16	040013	—	1.63	0.56	5/16	0.2
1	040014	456234	1.63	0.63	5/16	0.2
1-1/16	040015	—	1.75	0.63	5/16	0.2
1-1/8	040016	456235	1.75	0.63	5/16	0.2
1-3/16	040017	—	2.00	0.69	3/8	0.4
1-1/4	040018	456236	2.00	0.69	3/8	0.4
1-5/16	040019	—	2.13	0.69	3/8	0.4
1-3/8	040020	—	2.13	0.75	3/8	0.4
1-7/16	040021	—	2.25	0.75	3/8	0.5
1-1/2	040022	456237	2.25	0.75	3/8	0.5
1-9/16	040023	—	2.50	0.81	3/8	0.7
1-5/8	040024	—	2.50	0.81	3/8	0.6
1-11/16	040025	—	2.50	0.81	3/8	0.6
1-3/4	040026	456238	2.75	0.88	1/2	0.8
1-7/8	040027	—	2.75	0.88	1/2	0.8
1-15/16	040028	—	3.00	0.88	1/2	1.0
2	040029	456239	3.00	0.88	1/2	1.0
2-3/16	040030	—	3.25	0.94	1/2	1.2
2-1/4	040031	—	3.25	0.94	1/2	1.2
2-7/16	040032	—	3.50	1.00	1/2	1.4
2-1/2	040033	—	3.50	1.00	1/2	1.3
2-15/16	040034	—	4.25	1.13	1/2	2.2

Note: Steel is mild carbon steel.
Stainless is 300-series stainless.
All sizes are fitted with one set screw.

Solid Iron

Shaft size	Part number	Dimensions		
		OD (A)	Width (B)	Wt.
1-15/16	010020	3.38	1.38	2.5
2	010021	3.38	1.38	2.5
2-3/16	010024	3.75	1.38	3.0
2-7/16	010028	4.25	1.50	4.3
2-1/2	010029	4.25	1.50	4.3
2-11/16	010032	4.75	1.50	5.0
2-15/16	010036	5.00	1.63	5.6
3-3/16	010039	5.50	1.63	7.0
3-7/16	010043	5.75	1.75	7.6
3-15/16	010048	6.50	1.88	10.0
4-7/16	010051	7.25	2.00	12.0
4-15/16	010054	8.00	2.13	16.3
5-7/16	010055	8.75	2.13	18.5
5-15/16	010056	9.25	2.25	23.0
6	010057	9.25	2.25	23.0
6-1/2	010058	10.00	2.25	25.0
7	010059	10.50	3.38	32.0
7-1/2	010060	11.38	2.50	35.0
8	010061	12.13	2.88	45.0

Note: Solid and Split iron collars have one set screw through 3-1/4" bore size. 3-3/16" and larger bores have two set screws.

Split Iron

Shaft size	Part number	Dimensions		
		OD (A)	Width (B)	Wt.
1-1/8	010075	3.13	1.25	1.3
1-3/16	010076	3.13	1.25	1.3
1-1/4	010077	3.13	1.25	1.3
1-5/16	010078	3.38	1.44	1.8
1-7/16	010080	3.38	1.44	1.8
1-1/2	010081	3.38	1.44	1.8
1-11/16	010084	3.75	1.56	2.4
1-3/4	010085	3.75	1.56	2.4
1-15/16	010088	4.06	1.75	2.6
2	010089	4.06	1.75	2.6
2-3/16	010092	4.50	1.88	3.4
2-1/4	010093	4.50	1.88	3.4
2-7/16	010096	4.44	1.88	3.8
2-1/2	010097	4.88	2.00	4.3
2-11/16	010100	5.31	2.06	5.4
2-15/16	010104	5.50	1.88	4.6
3	010105	5.50	1.88	4.4
3-3/16	010107	6.06	2.38	8.0
3-7/16	010110	6.06	2.38	6.0
3-11/16	010112	6.81	2.63	10.6
3-15/16	010114	7.00	2.75	9.0
4-7/16	010117	8.13	3.31	17.0
4-15/16	010120	8.50	3.25	20.8
5-7/16	010123	9.00	3.25	23.0
5-15/16	010126	9.50	3.25	23.7
6	010127	10.13	4.06	35.0
6-1/2	010128	11.00	4.25	41.0
7	010129	12.00	4.50	46.0
7-1/2	010130	12.94	4.69	56.0
8	010131	13.50	4.88	71.0

Notes

Specialty (plain)

B28-1	**Specialty (plain)**
B28-2	**Features and benefits**
B28-3	**How to order**
B28-3	**Nomenclature**
B28-4	**Selection**
B28-10	**Dimensions**
B28-10	Babbitted
B28-10	Solid
B28-12	Split
B28-14	Rigid
B28-16	Angle
B28-18	Flange
B28-20	Shaft collar
B28-21	Bronze-Bushed
B28-21	Split
B28-22	Rigid
B28-23	Angle
B28-25	Bronzoil
B28-25	Pillow block
B28-26	Flange
B28-27	Shaft collar

Features and benefits

Babbitted, Bronze-Bushed, and Bronzoil

Babbitted

- MPTA load ratings
- Cast-iron housings
- 2- and 4-bolt housings
- Solid or fully split housing
- Babbitted bearing surface



Bronzed-Bushed

- Fully split housing
- Replaceable split bronze bushings
- Brass locking spool for easy bushing replacement



Bronzoil

- Self oiling bushing feeds oil to shaft
- Split pressed steel housing
- Statically self-aligning
- Bushing shoulder provides self-lubricating bearing thrust surface
- Slotted bolt holes
- Oil resistant rubber grommets available for sound isolation and static electricity protection



How to order

Babbitted, Bronze-Bushed, and Bronzoil

There are two ways to specify Dodge bearings—by six-digit part number or by description. Most of the products offered have part numbers with listings shown throughout this catalog. Use of part numbers ensures accurate order processing.

When part numbers are not shown, the product may be specified by description. This method is used when ordering units that include modifications or options. To order by description, use the nomenclature key shown for each product, adding any special instructions to the end of the description for options not covered by the nomenclature.

Babbitted

Grease lubricated for moderate speeds and loads, ambient temperature to 130 °F, babbitt accurately bored to insure even load distribution for conveyor shafts, heavy gear, and chain drives use.

Bronze-Bushed

Grease lubricated for moderate speeds, ambient temperature to 300 °F and heavy loads or shock loads make the advantage of a precision replaceable bronze bushing desirable. Other bushing material is available on a special order basis, such as bronze with graphite plugs, or phenolic resin on nylon.

Bronzoil

Economical, statically self-aligning, and self-lubricating pillow blocks and four-bolt flange units for fans, light machinery, and other general use; ambient temperature to 180 °F.

Nomenclature

P2B - BASO - 108

Housings

P2B = Pillow block, 2-bolt

P4B = Pillow block, 4-bolt

F4B = Flange, 4-bolt

TP-H = Take-up

Shaft size

115 = First digit = Number of inches
Second and third digits = Sixteenths of an inch
115 – Indicates 1-15/16

50M = First two digits = Bore in millimeters;
M – Indicates metric dimension

Style

BASO = Babbitted solid journal bearing

BASP = Babbitted split journal bearing

BZSP = Bronze-Bushed split journal bearing

BZR = Bronze-Bushed rigid split journal bearing

BZA = Angle Bronze-Bushed journal bearing

BO = Bronzoil journal bearing

Selection

Babbitted

Scope – For stock Babbitted bearings, pillow blocks and take-ups of the rigid, grease lubricated type.

Important – Referring to Table 1 on the next page: Table 1 ratings apply to the following Dodge Babbitted sleeve bearings:

- Solid journals
- Split Babbitted journals
- Rigid Babbitted pillow blocks
- Angle Babbitted pillow blocks
- Plate-type flange bearings

Babbitted bearings do not include grease fittings.

Reference – Flush type reducer bushings to be used with part number 405015 1/8 NPT grease fitting:

To order 1/8 NPT grease fitting, confirm pipe tap dimension on bearing dimension page. If the pipe tap is 1/8, a flush type reducer bushing is not required. If the pipe tap is 1/4, 3/8 or 1/2; order the appropriate size flush type reducer bushing in addition to part number 405015.

Part number	Description
430081	1/2 x 1/8
430086	3/8 x 1/8
430087	1/4 x 1/8

Selection – Select a bearing from rating tables having a radial load equal to or greater than the actual radial load, provided that operating conditions numbered 1 through 7 are met.

If these conditions cannot be met, select a bearing for an equivalent radial load to be obtained by multiplying the actual radial load by a service factor depending on the specific application. Use a factor of up to 2.0 for areas in the rating table to the left of the zigzag line. Use a factor of up to 3.0 for areas to the right of the zigzag line.

Load ratings are based on industry standard ratings established by the mechanical power transmission association MPTA (Standard No. 401).

Operating conditions

1. Maintain adequate grease lubrication.

2. Maintain proper bearing alignment for uniform distribution of load under all operating conditions.

3. Normal running loads must not exceed ratings shown in the load tables. Starting and occasional peak loads should not exceed ratings by more than 100 percent.

4. Direction of load should not be closer than 30 degrees to grease groove or closer than 30 degrees to the joint between cap and base. If direction of load falls within this area which is not recommended, decrease maximum load by 50 percent.

5. The shaft journal surface finish must be equal to that of commercial steel shafting (about 32 micro inches) and the diameter within the tolerances of commercial steel shafting (+.000 / -.002)

6. Ambient temperature should not exceed 130 °F for babbitted polymer limits and 300 °F for Bronze-Bushed bearings. If the shaft transmits heat from a source such as an oven, the shaft temperature at the bearing should not exceed these ambient temperatures.

7. Bearings should be protected against adverse operating conditions.

Bronze-Bushed

Scope – For stock Bronze-Bushed bearings, pillow blocks and take-ups of the rigid, grease lubricated type.

Important – Referring to Table 2 on the next page: Table 2 ratings apply to Dodge Bronze-Bushed pillow blocks:

Split Bronze-Bushed journals

Rigid Bronze-Bushed pillow blocks

Angle Bronze-Bushed pillow blocks

Note: Ratings do not apply to Bronzoil, or Solidlube pillow blocks.

Bronze-Bushed journal bearings do not include grease fittings.

Reference – Flush type reducer bushings to be used with part number 405015 1/8 NPT grease fitting:

To order 1/8 NPT grease fitting, confirm pipe tap dimension on bearing dimension page. If the pipe tap is 1/8, a flush type reducer bushing is not required. If the pipe tap is 1/4, 3/8 or 1/2; order the appropriate size flush type reducer bushing in addition to part number 405015.

Part number	Description
430081	1/2 x 1/8
430086	3/8 x 1/8
430087	1/4 x 1/8

Selection – Select a bearing from rating tables having a radial load equal to or greater than the actual radial load, provided that operating conditions numbered 1 through 7 are met.

If these conditions cannot be met, select a bearing for an equivalent radial load to be obtained by multiplying the actual radial load by a service factor depending on the specific application. Use a factor of up to 2.0 for areas in the rating table to the left of the zigzag line. Use a factor of up to 3.0 for areas to the right of the zigzag line.

Load ratings are based on industry standard ratings established by the MPTA (Standard No. 401).

Operating conditions

1. Maintain adequate grease lubrication.

2. Maintain proper bearing alignment for uniform distribution of load under all operating conditions.

3. Normal running loads must not exceed ratings shown in the load tables. Starting and occasional peak loads should not exceed ratings by more than 100 percent.

4. Direction of load should not be closer than 30 degrees to grease groove or closer than 30 degrees to the joint between cap and base. If direction of load falls within this area which is not recommended, decrease maximum load by 50 percent.

5. The shaft journal surface finish must be equal to that of commercial steel shafting (about 32 micro inches) and the diameter within the tolerances of commercial steel shafting (+.000 / -.002).

6. Ambient temperature should not exceed 130 °F for babbitted polymer limits and 300 °F for Bronze-Bushed bearings. If the shaft transmits heat from a source such as an oven, the shaft temperature at the bearing should not exceed these ambient temperatures.

7. Bearings should be protected against adverse operating conditions.

Babbitted

Table 1: MPTA radial load ratings for Babbitted sleeve bearings

Shaft size (in)	Radial load rating in lbs at various revolutions per minute															
	10	50	100	150	200	250	300	350	400	450	500	600	700	800	900	1000
1/2	100	100	100	95	95	95	95	95	90	90	90	85	85	85	80	80
5/8	150	150	145	145	140	140	135	135	135	130	130	125	120	115	110	110
3/4	180	175	175	170	170	165	160	160	155	155	150	145	140	130	125	120
7/8	260	255	250	245	240	235	230	225	220	215	210	200	190	180	150	—
15/16	280	275	265	260	255	250	245	240	235	225	220	210	200	185	105	—
1	295	290	285	280	270	265	260	250	245	240	230	220	205	—	—	—
1-1/8	415	410	400	390	380	370	355	345	335	325	315	295	245	—	—	—
1-3/16, 1-1/4	440	430	420	410	395	385	375	360	350	340	325	305	190	—	—	—
1-5/16, 1-3/8	585	570	555	535	520	505	485	470	455	435	420	345	—	—	—	—
1-7/16, 1-1/2	640	625	605	585	565	545	525	500	480	460	440	205	—	—	—	—
1-11/16, 1-3/4	875	850	820	785	755	720	690	655	625	590	340	—	—	—	—	—
1-15/16, 2	1150	1110	1060	1010	965	915	865	815	730	335	—	—	—	—	—	—
2-3/16, 2-1/4	1460	1400	1330	1260	1190	1120	1050	975	410	—	—	—	—	—	—	—
2-7/16, 2-1/2	1800	1730	1630	1530	1430	1340	1240	645	—	—	—	—	—	—	—	—
2-11/16, 2-3/4	2190	2080	1950	1820	1690	1560	1150	110	—	—	—	—	—	—	—	—
2-15/16, 3	2600	2470	2300	2130	1960	1790	675	—	—	—	—	—	—	—	—	—
3-7/16, 3-1/2	3550	3330	3060	2790	2520	1200	—	—	—	—	—	—	—	—	—	—
3-15/16, 4	4640	4310	3910	3500	2760	—	—	—	—	—	—	—	—	—	—	—
4-7/16, 4-1/2	5870	5410	4830	4250	1410	—	—	—	—	—	—	—	—	—	—	—
4-15/16, 5	7240	6600	5810	5010	—	—	—	—	—	—	—	—	—	—	—	—
5-7/16, 5-12	8750	7900	6840	4360												
5-15/16, 6	10410	9300	7910	2390												
6-7/16, 6-1/2	12200	10790	9020	—												
6-15/16, 7	14120	12360	10150	—												
7-7/16, 7-1/2	17270	14950	12050	—												
7-15/16, 8	18390	15750	10710	—												
9	20750	17360	4140													
10	22950	18760	—													
12	30700	23190	—													

For speeds lower than 10 rpm consult Application Engineering.

Bronze-Bushed

Table 2: MPTA radial load ratings for Bronze-Bushed sleeve bearings

Shaft size (in)	Radial load rating in lbs at various revolutions per minute															
	10	50	100	150	200	250	300	350	400	450	500	600	700	800	900	1000
1/2	170	170	165	165	165	165	165	160	160	160	160	155	155	150	150	145
5/8	250	250	245	245	245	240	240	235	235	235	230	225	220	220	215	210
3/4	300	300	295	295	290	285	285	280	280	275	270	265	260	255	250	240
7/8	435	430	425	420	415	410	405	400	395	390	385	375	365	355	325	245
15/16	465	460	455	450	445	435	430	425	420	415	410	395	385	375	295	200
1	495	490	485	480	470	465	460	450	445	440	430	420	405	360	255	150
1-1/8	700	690	680	670	660	650	640	630	620	605	595	575	525	360	195	—
1-3/16, 1-1/4	735	730	715	705	695	680	670	660	645	635	625	600	485	300	115	—
1-5/16, 1-3/8	980	965	950	930	915	895	880	865	845	830	815	735	465	195	—	—
1-7/16, 1-1/2	1070	1050	1030	1010	995	975	955	935	915	895	875	635	315	—	—	—
1-11/16, 1-3/4	1470	1440	1410	1370	1340	1310	1280	1240	1210	1180	930	410	—	—	—	—
1-15/16, 2	1920	1880	1830	1790	1740	1690	1640	1590	1500	1110	715	—	—	—	—	—
2-3/16, 2-1/4	2440	2390	2320	2240	2170	2100	2030	1960	1390	830	265	—	—	—	—	—
2-7/16, 2-1/2	3020	2940	2850	2750	2650	2560	2460	1860	1090	—	—	—	—	—	—	—
2-11/16, 2-3/4	3660	3560	3430	3300	3170	3040	2620	1580	545	—	—	—	—	—	—	—
2-15/16, 3	4370	4230	4060	3890	3720	3550	2440	—	—	—	—	—	—	—	—	—
3-7/16, 3-1/2	5960	5740	5470	5200	4930	3610	1440	—	—	—	—	—	—	—	—	—
3-15/16, 4	7790	7460	7060	6650	5910	—	—	—	—	—	—	—	—	—	—	—
4-7/16, 4-1/2	9860	9400	8820	8240	5400	—	—	—	—	—	—	—	—	—	—	—
4-15/16, 5	12180	11540	10740	9950	4090	—	—	—	—	—	—	—	—	—	—	—
5-7/16, 5-1/2	14740	13880	12820	10340	1820											
5-15/16, 6	17530	16420	15040	9520	—											
6-7/16, 6-1/2	20560	19150	17390	7900	—											
6-15/16, 7	23840	22070	19870	5350	—											
7-7/16, 7-1/2	29170	26850	23950	1880	—	For speeds lower than 10 rpm consult Application Engineering.										
7-15/16, 8	31090	28450	23410	—	—											
9	35150	31760	18540													
10	38950	34760	2220													
12	52300	45520	—													

Bronze-Bushed



U.S. Patent No. 3.071.419



Lower half of new bushing is installed by relieving shaft pressure, prying out old bushing and rolling in new one.

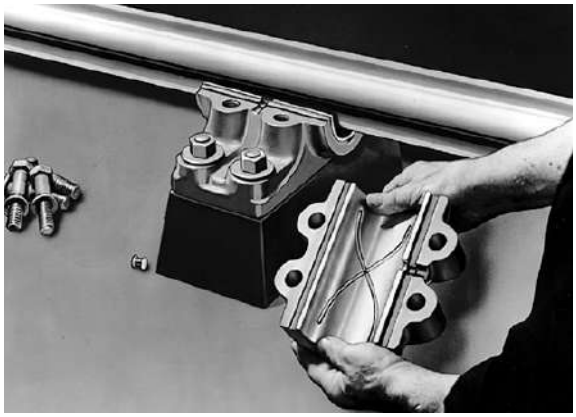

New bushing upper half is easily dropped into bearing cap. Grease grooves in the top of bore offer adequate lubrication.

- For split Bronze-Bushed journal bearings
- For rigid Bronze-Bushed pillow blocks
- For angle Bronze-Bushed pillow blocks

These precision bushings are machined from quality cast cylinders of high grade leaded bronze. They are furnished in matched halves and sold in complete sets only. Grease grooves are provided in the top half for proper lubrication. Bushings are designed to be installed in the bearings listed above without removing the shaft or bearing base. A brass locking spool positions the bushing preventing lateral movement or rotation. This simple method minimizes down time and labor costs. They are particularly suited for heavy loads, elevated temperatures and corrosive conditions.

Bushings made of special alloys can be furnished where especially difficult heat problems may arise.

They will be priced on application.

Bronze bushing sets ♦

Shaft size (in)	Bushing sets†		Locking spools*
	Part number	Weight	Part number
1-15/16	005055	1.70	005050
2-3/16	005056	2.10	
2-7/16	005057	2.50	
2-11/16	005058	3.10	
2-15/16	005059	3.60	
3-7/16	005060	4.90	
3-15/16	005061	9.70	005051
4-7/16	005062	14	
4-15/16	005063	15	
5-7/16	005064	18	005052
5-15/16	005065	21	
6-1/2	005066	28	005053
7	005067	33	
7-1/2	005117	37	
8	005068	42	

♦ For other bushing material consult Dodge Application Engineering.
† Part number is for one bushing set which includes upper and lower half.
* Order separately if desired.





Bronzoil

Radial load ratings for Bronzoil sleeve bearings

Shaft sizes (in)	Radial load rating in lbs at various revolutions per minute					
	50	100	200	500	1000	1500
1/2	230	225	220	175	120	110
5/8	250	240	230	180	125	105
3/4	260	250	240	185	130	100
7/8	280	270	260	190	145	95
15/16	380	360	290	200	150	90
1	420	400	300	210	160	85
1-3/16	500	475	395	250	135	115
1-1/4	525	500	415	260	140	120

Shaft sizes (in)	Radial load rating in lbs at various revolutions per minute				
	2000	2500	3000	3500	4000
1/2	90	80	60	50	45
5/8	80	65	55	45	35
3/4	70	55	50	35	—
7/8	60	50	45	—	—
15/16	55	45	40	—	—
1	50	40	—	—	—
1-3/16	60	—	—	—	—
1-1/4	63	—	—	—	—

Select a bearing from the rating tables having a radial load equal to or greater than the actual load providing normal operating conditions are met. If these conditions cannot be met, select a bearing for an equivalent radial load to be obtained by multiplying the actual radial load by a 2.0 to 4.0 service factor - depending on specific application.

Normal operating conditions:

1. Adequate oil supply.
2. Proper bearing alignment for uniform distribution of load at all operating conditions.
3. No shock loading.
4. No adversely high operating conditions.
5. No moist, corrosive, or abrasive atmosphere.
6. Shaft surface finish must be equal to that of commercial steel shafting (about 32 micro inches).
7. Shaft diameter tolerance within +.000/ -.002.
8. Maximum operating temperature 180 °F.

Dimensions

Babbitted pillow block – inch

2-bolt, solid

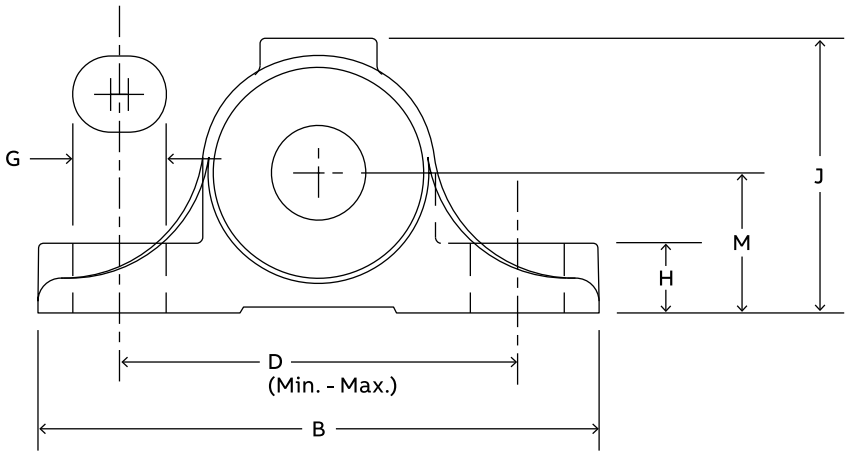

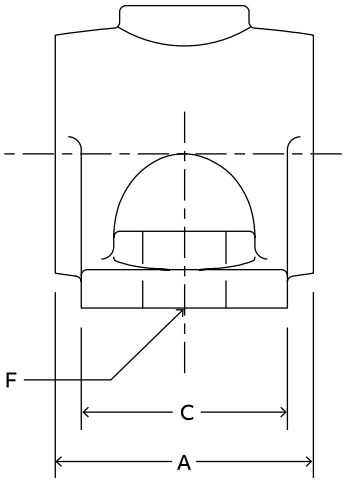

Shaft size	Part number	Description	Weight	Frame	A	B	C	D	
								Min.	Max.
1/2	006102	P2B-BASO-008	0.6	LD-10	1-1/4	3	1	2-1/32	2-7/32
5/8	006104	P2B-BASO-010	1.0	LD-10	1-1/2	3-1/2	1-1/8	2-13/32	2-19/32
3/4	006107	P2B-BASO-012	0.9						
7/8	006109	P2B-BASO-014	1.7	LD-10	1-7/8	4	1-1/2	2-7/8	3-1/8
15/16	006110	P2B-BASO-015	1.6						
1	006111	P2B-BASO-100	1.5						
1-1/8	006113	P2B-BASO-102	2.7	LD-10	2-3/8	4-3/4	1-3/4	3-3/8	3-5/8
1-3/16	006114	P2B-BASO-103	2.6						
1-1/4	006115	P2B-BASO-104	2.5						
1-5/16	006117	P2B-BASO-105	4.4	—	2-7/8	5-1/2	2	3-7/8	4-1/8
1-3/8	006118	P2B-BASO-106	4.2						
1-7/16	006119	P2B-BASO-107	4.0						
1-1/2	006120	P2B-BASO-108	3.8						
1-11/16	006124	P2B-BASO-111	6.0	LD-20	3-3/8	6-1/4	2-1/4	4-11/32	4-21/32
1-3/4	006125	P2B-BASO-112	5.8						
1-15/16	006128	P2B-BASO-115	8.2	—	3-7/8	7	2-1/2	5-1/8	5-3/8
2	006129	P2B-BASO-200	8.0						
2-3/16	006132	P2B-BASO-203	12	—	4-3/8	7-3/4	2-3/4	5-1/2	6
2-7/16	006136	P2B-BASO-207	15	—	4-7/8	8-1/2	3	6	6-1/2
2-11/16	006140	P2B-BASO-211	19	—	5-3/8	9-1/4	3-1/4	6-1/2	7
2-15/16	006144	P2B-BASO-215	25	LD-45	5-7/8	10	3-1/2	7-9/32	7-23/32
3-3/16	006148	P2B-BASO-303	33	—	6-7/8	10-3/4	4	7-5/8	8-3/8
3-7/16	006152	P2B-BASO-307	30						

Note: No published metric dimensions for this product.

Babbitted pillow block – inch

2-bolt, solid

Shaft size	F bolt	G	H	J	M	Grease cups #		
						Pipe tap	Number required	Size
1/2	5/16	1/2	3/8	1-15/32	3/4	1/8	1	0
5/8	5/16	1/2	1/2	1-23/32	7/8	1/8	1	0
3/4								
7/8	3/8	9/16	5/8	2	1	1/8	1	0
15/16								
1								
1-1/8	7/16	21/32	11/16	2-7/16	1-1/4	1/8	1	0
1-3/16								
1-1/4								
1-5/16	1/2	11/16	7/8	2-3/4	1-3/8	1/4	1	0
1-3/8								
1-7/16								
1-1/2								
1-11/16	9/16	13/16	1	3-1/16	1-1/2	1/4	1	0
1-3/4								
1-15/16	5/8	13/16	1-1/8	3-1/2	1-3/4	1/4	1	0
2								
2-3/16	11/16	1-1/32	1-1/4	3-13/16	1-7/8	3/8	1	2
2-7/16	3/4	1-1/8	1-3/8	4-1/4	2-1/8	3/8	1	2
2-11/16	13/16	1-5/32	1-1/2	4-9/16	2-1/4	3/8	1	2
2-15/16	7/8	1-5/32	1-11/16	5	2-1/2	3/8	1	2
3-3/16	1	1-7/16	1-7/8	5-7/16	2-3/4	3/8	1	2
3-7/16								

Grease cups or pressure fittings may be obtained through our distributors; one required per bearing.

Note: All blocks have two base bolts and are one piece solid housings.

No published metric dimensions for this product.

Babbitted pillow block – inch

2-bolt, split

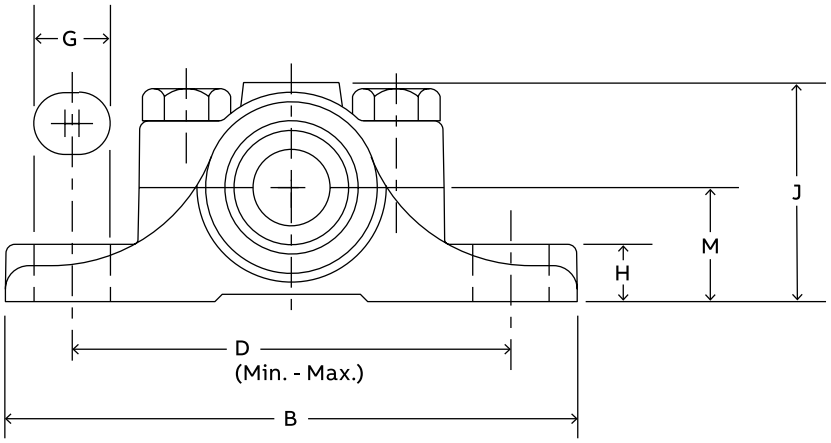

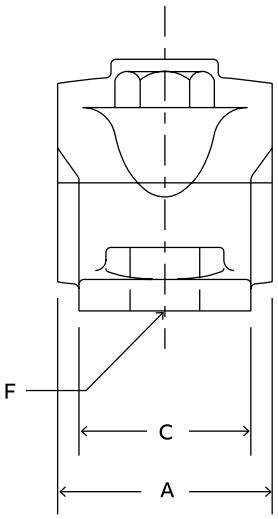

Shaft size	Part number	Description	Weight	A	B	C	D	
							Min.	Max.
1/2	006001	P2B-BASP-008	0.8	1-1/4	3-3/4	1	2-3/4	3
5/8	006004	P2B-BASP-010	1.1	1-1/2	4-1/4	1-1/8	3-1/8	3-3/8
3/4	006007	P2B-BASP-012	1.0					
7/8	006010	P2B-BASP-014	1.9	2	4-3/4	1-1/2	3-1/2	3-3/4
15/16	006013	P2B-BASP-015	1.8					
1	006016	P2B-BASP-100	1.7					
1-1/16	006019	P2B-BASP-101	3.3	2-1/2	5-1/4	1-3/4	4	4-1/4
1-1/8	006022	P2B-BASP-102	3.2					
1-3/16	006025	P2B-BASP-103	3.1					
1-1/4	006028	P2B-BASP-104	3.0					
1-5/16	006031	P2B-BASP-105	5.0	3	6-1/4	2	4-13/16	4-15/16
1-3/8	006034	P2B-BASP-106	4.8					
1-7/16	006037	P2B-BASP-107	1.6					
1-1/2	006040	P2B-BASP-108	4.4					
1-5/8	006043	P2B-BASP-110	6.6	3-3/8	6-3/4	2-1/4	5-1/8	5-3/8
1-11/16	006046	P2B-BASP-111	6.4					
1-3/4	006049	P2B-BASP-112	6.2					
1-15/16	006052	P2B-BASP-115	8.6	4	7-1/2	2-1/2	5-15/16	6-1/16
2	006055	P2B-BASP-200	8.3					
2-3/16	006058	P2B-BASP-203	12.2	4-1/2	8-1/2	2-3/4	6-1/4	6-3/4
2-1/4	006061	P2B-BASP-204	11.9					
2-7/16	006064	P2B-BASP-207	15.6	5	9-1/4	3	6-7/8	7-3/8
2-1/2	006067	P2B-BASP-208	15.1					
2-11/16	006070	P2B-BASP-211	20.0	5-3/8	10	3-5/16	7-1/2	8
2-15/16	006073	P2B-BASP-215	24.2	6	10-3/4	3-1/2	8-1/4	8-3/4
3	006076	P2B-BASP-300	23.7					
3-7/16	006079	P2B-BASP-307	40	6-7/8	12	4	8-7/8	9-5/8
3-15/16	006082	P2B-BASP-315	53	7-7/8	13-1/2	4-1/2	10-3/32	10-29/32

Note: No published metric dimensions for this product.

Babbitted pillow block – inch

2-bolt, split

Shaft size	F bolt	G	H	J	M	Grease cups #		
						Pipe tap	Number required	Size
1/2	5/16	1/2	23/64	1-15/32	3/4	1/8	1	0
5/8	5/16	1/2	1/2	1-23/32	7/8	1/8	1	0
3/4								
7/8	3/8	9/16	9/16	2	1	1/8	1	0
15/16								
1								
1-1/16	7/16	5/8	5/8	2-7/16	1-1/4	1/8	1	0
1-1/8								
1-3/16								
1-1/4								
1-5/16	9/16	11/16	3/4	2-3/4	1-3/8	1/4	1	0
1-3/8								
1-7/16								
1-1/2								
1-5/8	9/16	25/32	13/16	3-1/16	1-1/2	1/4	1	0
1-11/16								
1-3/4								
1-15/16	11/16	13/16	15/16	3-1/2	1-3/4	1/4	1	0
2								
2-3/16	11/16	1	1	3-13/16	1-7/8	3/8	1	2
2-1/4								
2-7/16	11/16	1	1-1/8	4-1/4	2-1/8	3/8	1	2
2-1/2								
2-11/16	13/16	1-1/8	1-3/16	4-9/16	2-1/4	3/8	1	2
2-15/16	13/16	1-1/8	1-5/16	5	2-1/2	3/8	1	2
3								
3-7/16	15/16	1-3/8	1-1/2	5-3/4	2-7/8	1/2	1	3
3-15/16	1	1-1/2	1-5/8	6-7/16	3-1/8	1/2	1	3

Grease cups or pressure fittings may be obtained through our distributors; one required per bearing.

Note: All blocks have 2 base bolts and 2 cap bolts. Housings are split.

No published metric dimensions for this product

Babbitted pillow block – inch

4-bolt, rigid, split

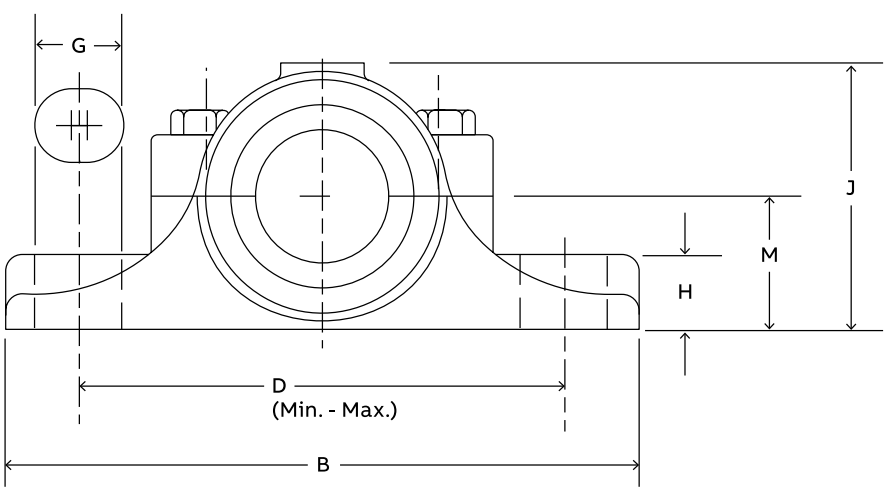

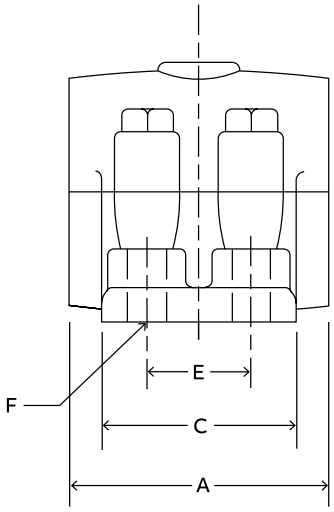

Shaft size	Part number	Description	Weight	A	B	C	D	
							Min.	Max.
1-15/16	004060	P4B-BAR-115	10.6	4	8-1/4	3-1/2	6-3/8	6-5/8
2	004063	P4B-BAR-200						
2-3/16	004066	P4B-BAR-203	13.2	4-1/2	8-1/2	3-1/2	6-5/8	6-7/8
2-1/4	004069	P4B-BAR-204						
2-7/16	004072	P4B-BAR-207	18.4	5	10-1/4	4	7-3/4	8-1/4
2-1/2	004075	P4B-BAR-208						
2-11/16	004078	P4B-BAR-211	22.4	5-1/2	10-1/2	4-1/4	8	8-1/2
2-15/16	004081	P4B-BAR-215	30.6	6	11	4-1/2	8-1/2	9
3	004084	P4B-BAR-300						
3-3/16	004087	P4B-BAR-303	50.2	7	13	5	10-1/8	10-7/8
3-7/16	004090	P4B-BAR-307						
3-1/2	004093	P4B-BAR-308						
3-15/16	004096	P4B-BAR-315	64	8	14-3/4	5-1/2	11-1/2	12-1/2
4-7/16	004099	P4B-BAR-407	88	9	16-1/2	6-1/4	13	14
4-15/16	004102	P4B-BAR-415	113	10	18	7	14-3/8	15-5/8
5-7/16	004105	P4B-BAR-507	147	11	19-1/4	7-3/4	15-1/8	16-3/8
5-15/16	004108	P4B-BAR-515	184	12	20-1/2	8-1/2	15-7/8	17-1/8
6-1/2	004113	P4B-BAR-608	255	13	22	9-1/2	17-3/8	18-5/8
7	004114	P4B-BAR-700	310	14	23	10	18-3/8	19-5/8
7-1/2	004115	P4B-BAR-708	370	15	24-1/2	10-1/2	19-3/8	20-5/8
8	004116	P4B-BAR-800	430	16	26	11	20-3/4	22-1/4

Note: No published metric dimensions for this product.

Babbitted pillow block – inch

4-bolt, rigid, split

Shaft size	E	F bolt	G	H	J	M	Grease cups #		
							Pipe tap	Number required	Size
1-15/16 2	1-3/4	1/2	3/4	7/8	3-1/2	1-3/4	1/4	1	1
2-3/16 2-1/4	1-3/4	1/2	3/4	1	3-13/16	1-7/8	3/8	1	2
2-7/16 2-1/2	2	5/8	1	1-1/8	4-1/4	2-1/8	3/8	1	2
2-11/16	2-1/4	5/8	1	1-1/4	4-9/16	2-1/4	3/8	1	2
2-15/16 3	2-1/2	5/8	1	1-3/8	5	2-1/2	3/8	1	2
3-3/16 3-7/16 3-1/2	2-3/4	3/4	1-1/4	1-1/2	5-29/32	3-1/4	1/2	1	3
3-15/16	3	3/4	1-3/8	1-5/8	6-17/32	3-1/2	1/2	1	4
4-7/16	3-1/2	7/8	1-1/2	1-3/4	7-17/32	4-1/8	1/2	1	4
4-15/16	4	7/8	1-5/8	1-7/8	8-7/32	4-1/2	1/2	1	4
5-7/16	4-1/2	1	1-3/4	2	9-1/32	5	1/2	2	3
5-15/16	5	1-1/8	1-7/8	2-1/8	9-7/8	5-1/2	1/2	2	3
6-1/2	5-1/2	1-1/8	1-7/8	2-1/4	10-23/32	6	1/2	2	4
7	6	1-1/4	2	2-3/8	11-1/2	6-1/2	1/2	2	4
7-1/2	6-1/4	1-3/8	2-1/8	2-1/2	12-5/32	6-3/4	1/2	2	4
8	6-3/4	1-3/8	2-1/4	2-1/2	12-3/4	7	1/2	2	4

Grease cups or pressure fittings may be obtained through our distributors; one required per bearing up through 4-15/16" sizes and two required for balance of sizes.

Note: 1-15/16—3" sizes have 2 cap bolts. 3-3/16" and larger sizes have 4 cap bolts (shown in diagram). Housings are split.

No published metric dimensions for this product

Babbitted pillow block – inch

4-bolt, angle

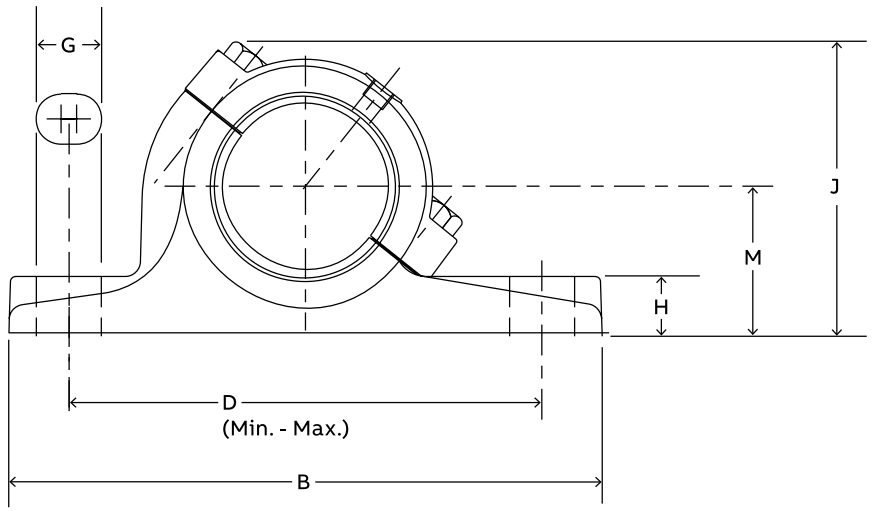

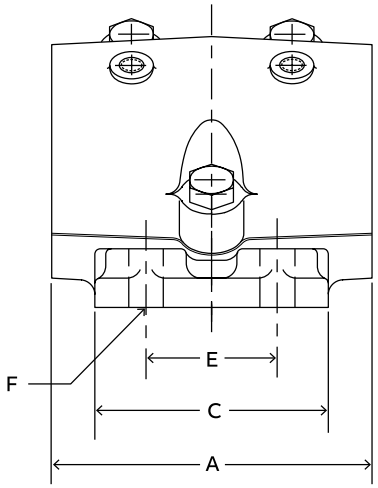

Shaft size	Part number	Description	Weight	Used on frame	A	B	C	D	
								Min.	Max.
1-15/16	230050	P4B-BAA-115	11	HD-200	4	8-1/4	3-1/2	6-5/16	6-11/16
2-3/16	230053	P4B-BAA-203	14	HD-200	4-1/2	8-1/2	3-1/2	6-9/16	6-15/16
2-7/16	230056	P4B-BAA-207	20	HD-200	5	10-1/4	4	7-11/16	8-5/16
2-11/16	230059	P4B-BAA-211	24	HB-250	5-1/2	10-1/2	4-1/4	7-15/16	8-9/16
2-15/16	230062	P4B-BAA-215	28	HD-250	6	11	4-1/2	8-7/16	9-1/16
3-7/16	230065	P4B-BAA-307	47	HD-300	7	13	5	10-1/16	10-15/16
3-15/16	230068	P4B-BAA-315	61	HD-350	8	14-3/4	5-1/2	11-7/16	12-9/16
4-7/16	230071	P4B-BAA-407	84	HD-400	9	16-9/16	6-5/16	12-15/16	14-1/16
4-15/16	230074	P4B-BAA-415	112	HD-400	10	18	7	14-5/16	15-11/16
5-7/16	230077	P4B-BAA-507	154	HD-500	11	19-3/4	8	15-1/16	16-7/16
5-15/16	230080	P4B-BAA-515	184	HD-500	12	20-1/2	8-1/2	15-13/16	17-3/16
6-1/2	230134	P4B-BAA-608	220	—	13	22	9-5/8	17-3/16	18-13/16
7	230137	P4B-BAA-700	275	—	14	23	10	18-1/4	19-3/4
8	230140	P4B-BAA-800	400	—	16	26	11	20-11/16	22-5/16

Note: No published metric dimensions for this product.

Babbitted pillow block – inch

4-bolt, angle

Shaft size	E	F bolt	G	H	J	M	Grease cups #		
							Pipe tap	Number required	Size
1-15/16	1-3/4	1/2	3/4	7/8	4-11/16	2-1/4	1/4	1	1
2-3/16	1-3/4	1/2	3/4	1	5-1/8	2-1/2	3/8	1	2
2-7/16	2	5/8	1	1-1/8	5-9/16	2-3/4	3/8	1	2
2-11/16	2-1/4	5/8	1	1-1/4	5-7/8	3	3/8	1	2
2-15/16	2-1/2	5/8	1	1-3/8	6-3/8	3-1/4	3/8	1	2
3-7/16	2-3/4	3/4	1-1/4	1-1/2	7-1/8	3-1/2	1/2	1	3
3-15/16	3	3/4	1-3/8	1-21/32	7-1/2	3-3/4	1/2	1	4
4-7/16	3-1/2	7/8	1-1/2	1-3/4	8-1/2	4-1/8	1/2	1	4
4-15/16	4	7/8	1-5/8	1-7/8	9-3/16	4-1/2	1/2	1	4
5-7/16	4-1/2	1-1/8	1-7/8	2	10-1/4	5	1/2	2	3
5-15/16	5	1-1/8	1-7/8	2-1/8	11-1/16	5-1/2	1/2	2	3
6-1/2	5-1/2	1-1/8	2	2-1/4	12-1/8	6	1/2	2	4
7	6	1-1/8	2	2-3/8	13	6-1/2	1/2	2	4
8	6-3/4	1-3/8	2-1/4	2-1/2	14-1/16	7	1/2	2	4

Grease cups or pressure fittings may be obtained through our distributors; one required per bearing up through 4-15/16, sizes and two required for balance of sizes.

Note: 1-15/16—3-7/16" sizes have 2 cap bolts.

3-7/16—5-15/16" have 3 cap bolts (shown in diagram).

6-1/2" and larger sizes have 4 cap bolts.

No published metric dimensions for this product.

Babbitted flange – inch

Plate-type

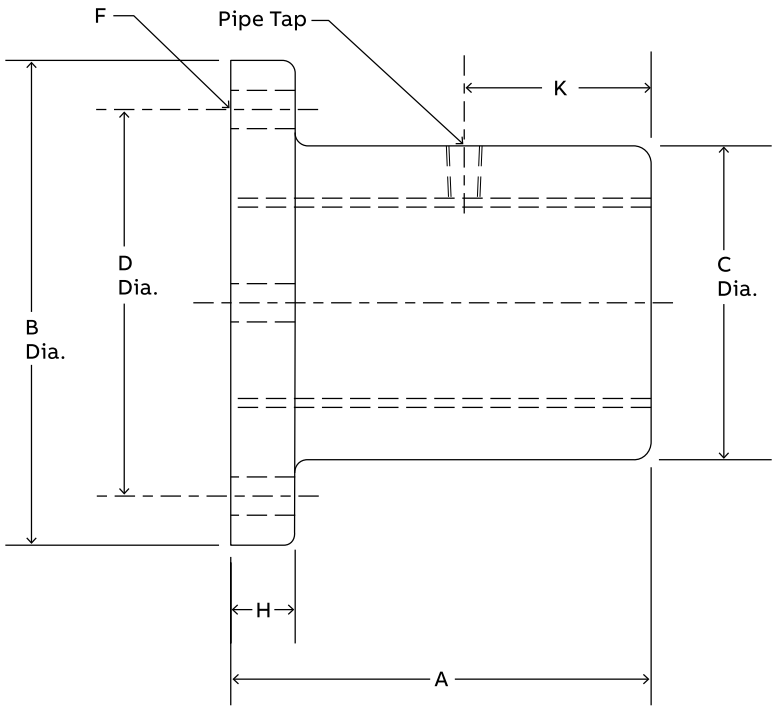

Shaft size	Part number	Description	Weight	A	B dia.	C dia.	D dia.
15/16	037001	F4B-BAP-015	2	2	4	2	3
1	037010	F4B-BAP-100					
1-3/16	037002	F4B-BAP-103	3.6	2-1/2	4-1/2	2-1/2	3-1/2
1-1/4	037011	F4B-BAP-104					
1-7/16	037003	F4B-BAP-107	5.3	3	5-1/4	2-3/4	4
1-1/2	037012	F4B-BAP-108					
1-11/16	037004	F4B-BAP-111	8.6	3-1/2	6	3-1/4	4-3/4
1-15/16	037005	F4B-BAP-115	12	4	6-1/2	3-3/4	5-1/4
2	037013	F4B-BAP-200					
2-3/16	037006	F4B-BAP-203	17	4-1/2	7-1/2	4	5-3/4
2-7/16	037007	F4B-BAP-207	22	5	8	4-1/2	6-1/4
2-11/16	037017	F4B-BAP-211	32	5-1/2	9	5	7
2-15/16	037009	F4B-BAP-215	35	6	9-1/2	5-1/4	7-1/2
3-7/16	037020	F4B-BAP-307	53	7	10-3/8	6-1/4	8-1/2
3-15/16	037022	F4B-BAP-315	70	8	11-1/8	6-7/8	9-1/4
4-7/16	037024	F4B-BAP-407	103	9	12-5/8	7-3/4	10-1/2
4-15/16	037026	F4B-BAP-415	140	10	14	8-1/2	11-1/2

Note: No published metric dimensions for this product.

Babbitted flange – inch

Plate-type

Shaft size	F bolt		H	K	Grease cups #	
	No.	Size			Pipe tap	Size
15/16 1	4	3/8	3/8	3/4	1/8	0
1-3/16 1-1/4	4	3/8	7/16	1	1/8	0
1-7/16 1-1/2	4	1/2	1/2	1-1/4	1/4	0
1-11/16	4	1/2	5/8	1-1/2	1/4	0
1-15/16 2	4	1/2	11/16	1-5/8	1/4	1
2-3/16	4	5/8	3/4	1-7/8	3/8	2
2-7/16	4	5/8	7/8	2-1/8	3/8	2
2-11/16	4	3/4	1	1-3/4	3/8	2
2-15/16	4	3/4	1	2-1/4	3/8	2
3-7/16	6	3/4	1	2-3/4	1/2	3
3-15/16	6	3/4	1-1/8	3-1/4	1/2	4
4-7/16	6	7/8	1-1/4	3-3/4	1/2	4
4-15/16	6	1	1-3/8	4-1/4	1/2	4

Grease cups or pressure fittings may be obtained through our distributors; one required per bearing.

Note: No published metric dimensions for this product.

Babbitted shaft collar – inch

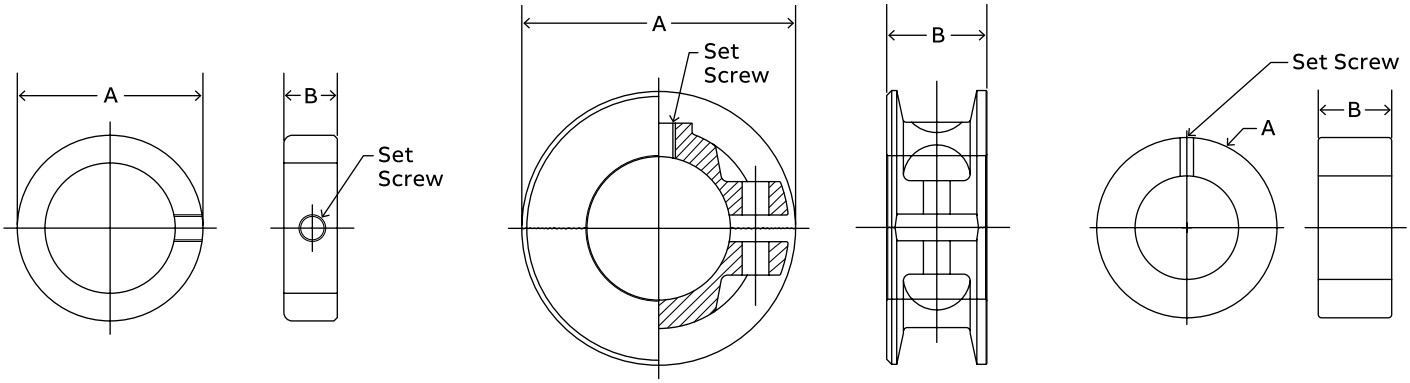

Solid steel

Shaft size	Part number *		Dimensions			
	Steel	Stainless	OD (A)	Width (B)	Screw	Wt.
1/8	—	456225	0.36	0.25	#6	0.01
3/16	040001	456226	0.44	0.25	#8	0.01
1/4	040002	456227	0.50	0.28	#10	0.01
5/16	040003	456228	0.63	0.34	#10	0.01
3/8	040004	456229	0.75	0.38	1/4	0.01
7/16	040005	—	0.88	0.44	1/4	0.05
1/2	040006	456230	1.00	0.44	1/4	0.1
9/16	040007	—	1.00	0.44	1/4	0.1
5/8	040008	456231	1.13	0.50	5/16	0.1
11/16	040009	—	1.25	0.56	5/16	0.1
3/4	040010	456232	1.25	0.56	5/16	0.1
13/16	040011	—	1.31	0.56	5/16	0.1
7/8	040012	456234	1.50	0.56	5/16	0.2
15/16	040013	—	1.63	0.56	5/16	0.2
1	040014	456234	1.63	0.63	5/16	0.2
1-1/16	040015	—	1.75	0.63	5/16	0.2
1-1/8	040016	456235	1.75	0.63	5/16	0.2
1-3/16	040017	—	2.00	0.69	3/8	0.4
1-1/4	040018	456236	2.00	0.69	3/8	0.4
1-5/16	040019	—	2.13	0.69	3/8	0.4
1-3/8	040020	—	2.13	0.75	3/8	0.4
1-7/16	040021	—	2.25	0.75	3/8	0.5
1-1/2	040022	456237	2.25	0.75	3/8	0.5
1-9/16	040023	—	2.50	0.81	3/8	0.7
1-5/8	040024	—	2.50	0.81	3/8	0.6
1-11/16	040025	—	2.50	0.81	3/8	0.6
1-3/4	040026	456238	2.75	0.88	1/2	0.8
1-7/8	040027	—	2.75	0.88	1/2	0.8
1-15/16	040028	—	3.00	0.88	1/2	1.0
2	040029	456239	3.00	0.88	1/2	1.0
2-3/16	040030	—	3.25	0.94	1/2	1.2
2-1/4	040031	—	3.25	0.94	1/2	1.2
2-7/16	040032	—	3.50	1.00	1/2	1.4
2-1/2	040033	—	3.50	1.00	1/2	1.3
2-15/16	040034	—	4.25	1.13	1/2	2.2

Note: Steel is mild carbon steel.
Stainless is 300-series stainless.
All sizes are fitted with one set screw.

Solid iron

Shaft size	Part number	Dimensions		
		OD (A)	Width (B)	Wt.
1-15/16	010020	3.38	1.38	2.5
2	010021	3.38	1.38	2.5
2-3/16	010024	3.75	1.38	3.0
2-7/16	010028	4.25	1.50	4.3
2-1/2	010029	4.25	1.50	4.3
2-11/16	010032	4.75	1.50	5.0
2-15/16	010036	5.00	1.63	5.6
3-3/16	010039	5.50	1.63	7.0
3-7/16	010043	5.75	1.75	7.6
3-15/16	010048	6.50	1.88	10.0
4-7/16	010051	7.25	2.00	12.0
4-15/16	010054	8.00	2.13	16.3
5-7/16	010055	8.75	2.13	18.5
5-15/16	010056	9.25	2.25	23.0
6	010057	9.25	2.25	23.0
6-1/2	010058	10.00	2.25	25.0
7	010059	10.50	3.38	32.0
7-1/2	010060	11.38	2.50	35.0
8	010061	12.13	2.88	45.0

Note: Solid and Split iron collars have one set screw through 3-1/4" bore size. 3-3/16" and larger bores have two set crews.

Split iron

Shaft size	Part number	Dimensions		
		OD (A)	Width (B)	Wt.
1-1/8	010075	3.13	1.25	1.3
1-3/16	010076	3.13	1.25	1.3
1-1/4	010077	3.13	1.25	1.3
1-5/16	010078	3.38	1.44	1.8
1-7/16	010080	3.38	1.44	1.8
1-1/2	010081	3.38	1.44	1.8
1-11/16	010084	3.75	1.56	2.4
1-3/4	010085	3.75	1.56	2.4
1-15/16	010088	4.06	1.75	2.6
2	010089	4.06	1.75	2.6
2-3/16	010092	4.50	1.88	3.4
2-1/4	010093	4.50	1.88	3.4
2-7/16	010096	4.44	1.88	3.8
2-1/2	010097	4.88	2.00	4.3
2-11/16	010100	5.31	2.06	5.4
2-15/16	010104	5.50	1.88	4.6
3	010105	5.50	1.88	4.4
3-3/16	010107	6.06	2.38	8.0
3-7/16	010110	6.06	2.38	6.0
3-11/16	010112	6.81	2.63	10.6
3-15/16	010114	7.00	2.75	9.0
4-7/16	010117	8.13	3.31	17.0
4-15/16	010120	8.50	3.25	20.8
5-7/16	010123	9.00	3.25	23.0
5-15/16	010126	9.50	3.25	23.7
6	010127	10.13	4.06	35.0
6-1/2	010128	11.00	4.25	41.0
7	010129	12.00	4.50	46.0
7-1/2	010130	12.94	4.69	56.0
8	010131	13.50	4.88	71.0

Bronze-Bushed pillow block – inch

2-bolt, split

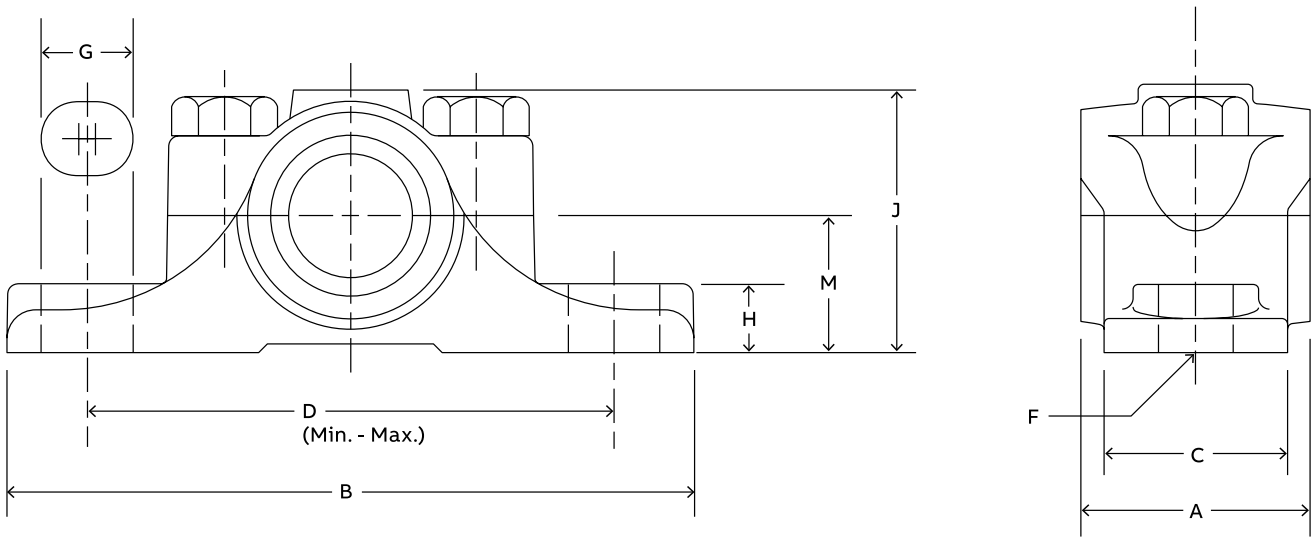

Shaft size	Part number	Description	Weight	A	B	C	D	
							Min.	Max.
1-15/16	005070	P2B-BZSP-115	9	3-7/8	7-1/2	2-1/2	5-15/16	6-1/16
2-3/16	005073	P2B-BZSP-203	12	4-3/8	8-1/2	2-3/4	6-1/4	6-3/4
2-7/16	005076	P2B-BZSP-207	15	4-7/8	9-1/4	3	6-7/8	7-3/8
2-11/16	005079	P2B-BZSP-211	20	5-3/8	10	3-1/4	7-1/2	8
2-15/16	005082	P2B-BZSP-215	24	6	10-3/4	3-1/2	8-1/4	8-3/4

Shaft size	F bolt	G	H	J	M	Grease cups #		
						Pipe tap	Number required	Size
1-15/16	5/8	13/16	15/16	3-1/2	1-3/4	1/4	1	0
2-3/16	5/8	1	1	3-7/8	1-7/8	3/8	1	2
2-7/16	5/8	1	1-1/8	4-1/4	2-1/8	3/8	1	2
2-11/16	3/4	1-1/8	1-3/16	4-9/16	2-1/4	3/8	1	2
2-15/16	3/4	1-1/8	1-5/16	5	2-1/2	3/8	1	2

Grease cups or pressure fittings may be obtained through our distributors; one required per bearing.

See page B28-8 for grease fitting and reducer bushing part numbers.

Note: All sizes have 2-bolt base and 2 cap bolts. Housings are split.

No published metric dimensions for this product.

Bronze-Bushed pillow block – inch

4-bolt, rigid

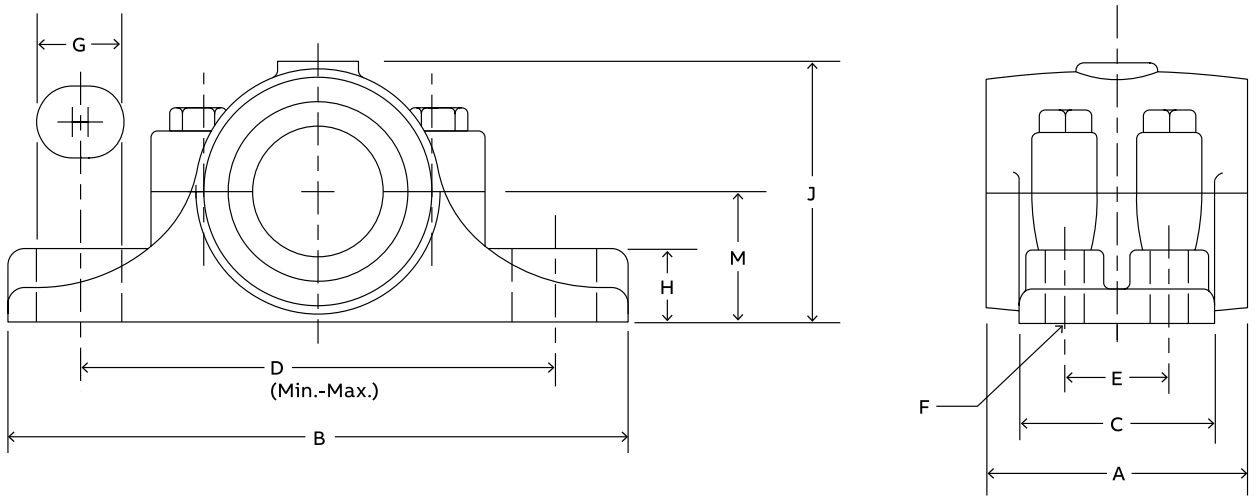

Shaft size	Part number	Description	Weight	A	B	C	D	
							Min.	Max.
3-7/16	005085	P4B-BZR-307	47	7	13	5	10-1/8	10-7/8
3-15/16	005088	P4B-BZR-315	64	8	14-3/4	5-1/2	11-1/2	12-1/2
4-7/16	005091	P4B-BZR-407	89	9	16-1/2	6-1/4	13	14
4-15/16	005094	P4B-BZR-415	115	10	18	7	14-3/8	15-5/8
5-7/16	005097	P4B-BZR-507	137	11	19-1/4	7-3/4	15-1/8	16-3/8
5-15/16	005100	P4B-BZR-515	180	12	20-1/2	8-1/2	15-7/8	17-1/8
6-1/2	005195	P4B-BZR-608	255	13	22	9-1/2	17-3/8	18-5/8
7	005198	P4B-BZR-700	310	14	23	10	18-3/8	19-5/8
7-1/2	005199	P4B-BZR-708	370	15	24-1/2	10-1/2	19-3/8	20-5/8
8	005201	P4B-BZR-800	430	16	26	11	20-3/4	22-1/4

Shaft size	E	F bolt	G	H	J	M	Grease cups #		
							Pipe tap	Number required	Size
3-7/16	2-3/4	3/4	1-1/4	1-1/2	6-1/32	3-1/4	1/2	1	3
3-15/16	3	3/4	1-3/8	1-5/8	6-1/2	3-1/2	1/2	1	4
4-7/16	3-1/2	7/8	1-1/2	1-3/4	7-15/32	4-1/8	1/2	1	4
4-15/16	4	7/8	1-5/8	1-7/8	8-1/32	4-1/2	1/2	1	4
5-7/16	4-1/2	1	1-3/4	2	8-15/16	5	1/2	2	3
5-15/16	5	1-1/8	1-7/8	2-1/8	9-13/16	5-1/2	1/2	2	3
6-1/2	5-1/2	1-1/8	1-7/8	2-1/4	10-11/16	6	1/2	2	4
7	6	1-1/4	2	2-3/8	11-7/16	6-1/2	1/2	2	4
7-1/2	6-1/4	1-3/8	2-1/8	2-1/2	12-1/8	6-3/4	1/2	2	4
8	6-3/4	1-3/8	2-1/4	2-1/2	12-11/16	7	1/2	2	4

Grease cups or pressure fittings may be obtained through our distributors; one required per pillow block u through 4-15/16" sizes and two required for balance of sizes.
See page B28-8 for grease fitting and reducer bushing part number.

Note: All sizes have 4 base bolts. 3-7/16" and larger sizes have 4 cap bolts. Housings are split.

No published metric dimensions for this product.

Bronze-Bushed pillow block – inch

4-bolt, angle

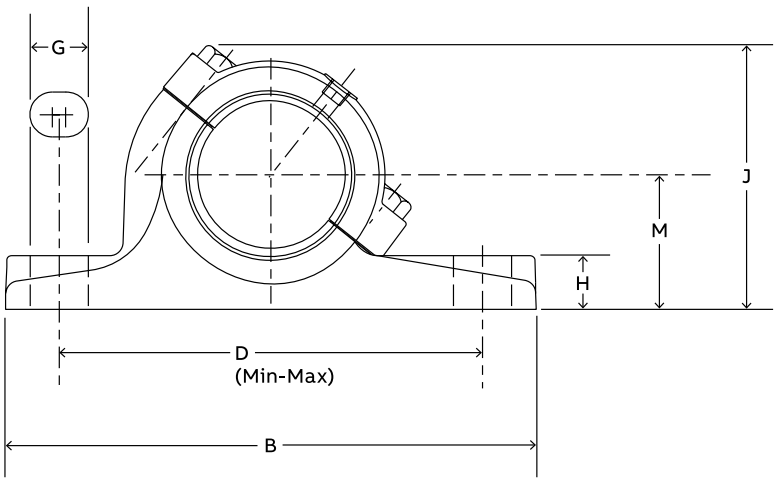

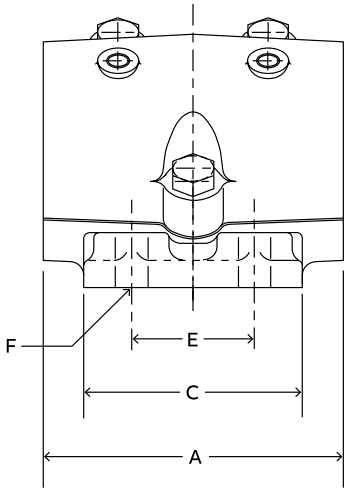

Shaft size	Part number	Description	Weight	Used on frame	A	B	C	D	
								Min.	Max.
1-15/16	231063	P4B-BZA-115	10	HD-200	4	8-1/4	3-1/2	6-5/16	6-11/16
2-3/16	231069	P4B-BZA-203	14	HD-200	4-1/2	8-1/2	3-1/2	6-9/16	6-15/16
2-7/16	231075	P4B-BZA-207	20	HD-200	5	10-1/4	4	7-11/16	8-5/16
2-11/16	231081	P4B-BZA-211	22	HD-250	5-1/2	10-1/2	4-1/4	7-15/16	8-9/16
2-15/16	231087	P4B-BZA-215	28	HD-250	6	11	4-1/2	8-7/16	9-1/16
3-7/16	231096	P4B-BZA-307	46	HD-300	7	13	5	10-1/16	10-15/16
3-15/16	231102	P4B-BZA-315	62	HD-350	8	14-3/4	5-1/2	11-7/16	12-9/16
4-7/16	231108	P4B-BZA-407	85	HD-400	9	16-9/16	6-5/16	12-15/16	14-1/16
4-15/16	231114	P4B-BZA-415	109	HD-400	10	18	7	14-5/16	15-11/16
5-7/16	231120	P4B-BZA-507	142	HD-500	11	19-3/4	8	15-1/16	16-7/16
5-15/16	231126	P4B-BZA-515	180	HD-500	12	20-1/2	8-1/2	15-13/16	17-3/16
6-1/2	231135	P4B-BZA-608	220	—	13	22	9-5/8	17-3/16	18-13/16
7	231141	P4B-BZA-700	275	—	14	23	10	18-1/4	19-3/4
8	231150	P4B-BZA-800	400	—	16	26	11	20-11/16	22-5/16

Note: No published metric dimensions for this product.

Bronze-Bushed pillow block – inch

4-bolt, angle

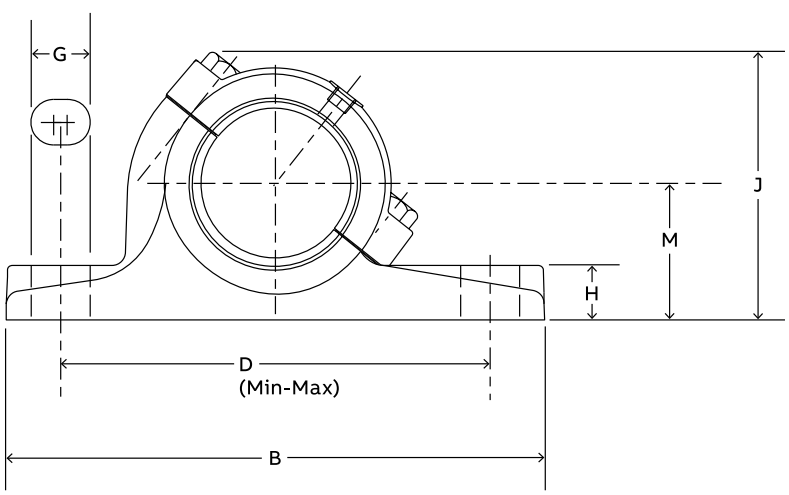

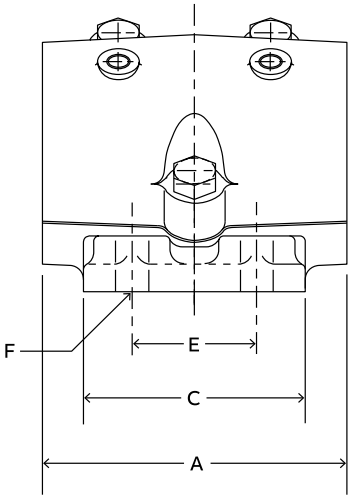

Shaft size	E	F bolt	G	H	J	M	Cap bolts quantity	Grease cups #		
								Pipe tap	Quantity	Size
1-15/16	1-3/4	1/2	3/4	7/8	4-11/16	2-1/4	2	1/4	1	1
2-3/16	1-3/4	1/2	3/4	1	5-1/8	2-1/2	2	3/8	1	2
2-7/16	2	5/8	1	1-1/8	5-9/16	2-3/4	2	3/8	1	2
2-11/16	2-1/4	5/8	1	1-1/4	5-7/8	3	2	3/8	1	2
2-15/16	2-1/2	5/8	1	1-3/8	6-3/8	3-1/4	2	3/8	1	2
3-7/16	2-3/4	3/4	1-1/4	1-1/2	7-1/8	3-1/2	2	1/2	1	3
3-15/16	3	3/4	1-3/8	1-5/8	7-1/2	3-3/4	3	1/2	1	4
4-7/16	3-1/2	7/8	1-1/2	1-3/4	8-1/2	4-1/8	3	1/2	1	4
4-15/16	4	7/8	1-5/8	1-7/8	9-3/16	4-1/2	3	1/2	1	4
5-7/16	4-1/2	1	1-7/8	2	10-1/4	5	3	1/2	2	3
5-15/16	5	1-1/8	1-7/8	2-3/16	11-1/16	5-1/2	3	1/2	2	3
6-1/2	5-1/2	1-1/8	2	2-1/4	12-1/8	6	4	1/2	2	4
7	6	1-1/4	2	2-3/8	13	6-1/2	4	1/2	2	4
8	6-3/4	1-3/8	2-1/4	2-1/2	14-1/16	7	4	1/2	2	4

Grease cups or pressure fittings may be obtained through our distributors; one required per pillows block up through 4-15/16" sizes and two required for balance of sizes. See page B28-8 for grease fitting and reducer bushing part number.

Note: 1-15/16—3-7/16" sizes have 2 cap bolts

3-15/16—5-15/16" sizes have 3 cap bolt (shown in diagram)

6-1/2" and larger have 4 cap bolts.

Bronzoil pillow block – inch

2-bolt

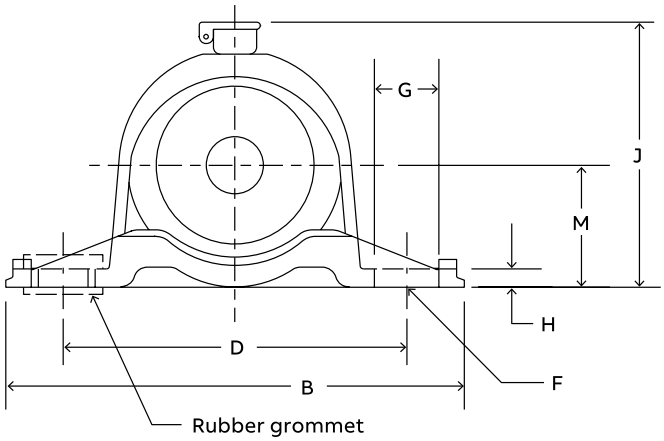

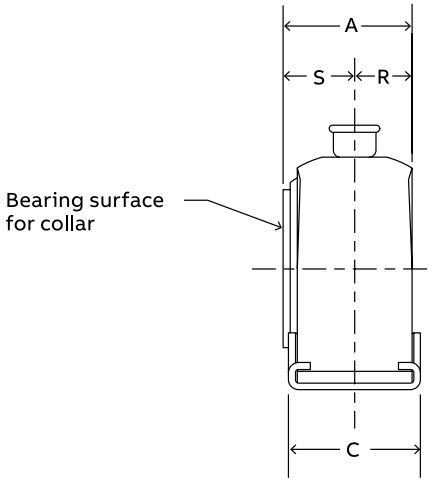

Shaft size	Part number	Description	Weight	A	B	C	D	F Min.	G	H	J	M	R	S
1/2	035025	P2B-BO-008												
5/8	035026	P2B-BO-010	0.6	1-1/8	4	1-3/16	3	3/8	9/16	5/32	2- 5/16	1-1/16	1/2	5/8
3/4	035027	P2B-BO-012												
7/8	035028	P2B-BO-014												
15/16	035029	P2B-BO-015	0.5	1-1/8	4	1-3/16	3	3/8	9/16	5/32	2-5/16	1-1/16	1/2	5/8
1	035030	P2B-BO-100												
1-3/16	035107	P2B-BO-103	1.3	1-3/4	4-1/2	1-1/4	3-1/2	3/8	9/16	5/32	2-13/16	1-5/16	7/8	7/8
1-1/4	035108	P2B-BO-104	1.2	1-3/4	4-1/2	1-1/4	3-1/2	3/8	9/16	5/32	2-13/16	1-5/16	27/32	29/32

Note: No published metric dimensions for this product.

Grommets are optional and furnished on order only. Order (2) grommet long nipples (part number 035082) for each pillow block.

When grommets are used, the J and M dimensions increase by 1/16” and the H dimension by 1/8”.
A 5/16” bolt and a washer must be used with each grommet. Washer part number 035084.

Bronzoil flange – inch

4-bolt

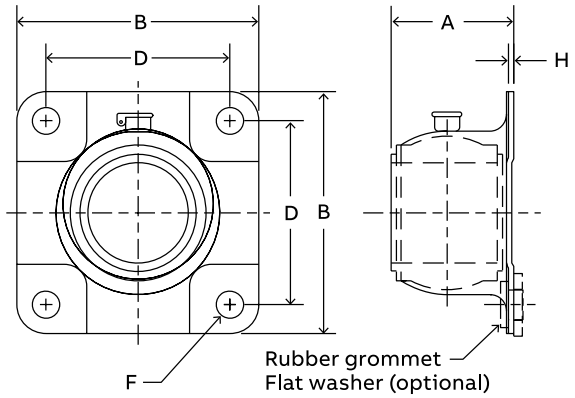

Style A

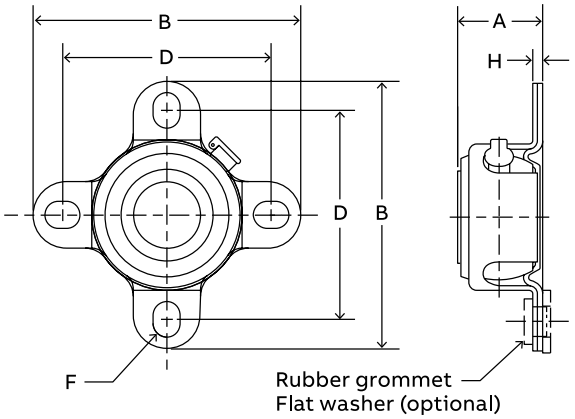

Style B

Shaft size	Part number	Description	Weight	A	B	D	F bolt	H	Style
1/2	035031	F4B-BO-008							
5/8	035032	F4B-BO-010	0.60	1-1/4	4	3-1/8	3/8	5/32	B
3/4	035033	F4B-BO-012							
7/8	035034	F4B-BO-014							
15/16	035035	F4B-BO-013	0.50	1-1/4	4	3-1/8	3/8	5/32	B
1	035036	F4B-BO-100							
1-3/16	035116	F4B-BO-103	1.30	1-7/8	3-5/8	2-3/4	3/8	1/16	A
1-1/4	035117	F4B-BO-104	1.20	1-29/32	3-5/8	2-3/4	3/8	1/16	A

Note: No published metric dimensions for this product

Grommets are optional and furnished on order only. Order (4) grommet short nipples (part number 035083) for each flange bearing.

When grommets are used, the A dimension increases by 1/16” and the H dimension by 1/8”.
A 5/16” bolt and a washer must be used with each grommet. Washer part number 035084.

Bronzoil shaft collar – inch

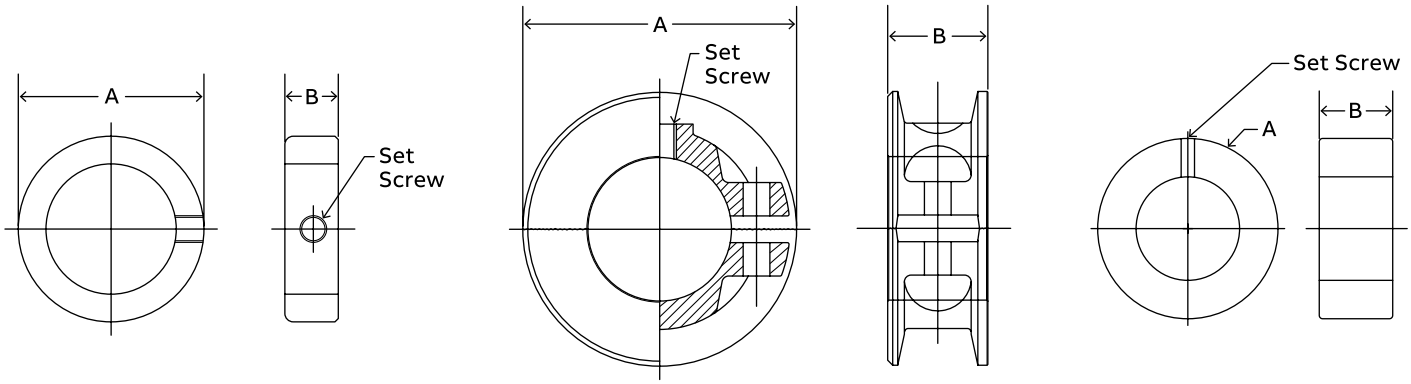

Solid steel

Shaft size	Part number *		Dimensions			
	Steel	Stainless	OD (A)	Width (B)	Screw	Wt.
1/8	—	456225	0.36	0.25	#6	0.01
3/16	040001	456226	0.44	0.25	#8	0.01
1/4	040002	456227	0.50	0.28	#10	0.01
5/16	040003	456228	0.63	0.34	#10	0.01
3/8	040004	456229	0.75	0.38	1/4	0.01
7/16	040005	—	0.88	0.44	1/4	0.05
1/2	040006	456230	1.00	0.44	1/4	0.1
9/16	040007	—	1.00	0.44	1/4	0.1
5/8	040008	456231	1.13	0.50	5/16	0.1
11/16	040009	—	1.25	0.56	5/16	0.1
3/4	040010	456232	1.25	0.56	5/16	0.1
13/16	040011	—	1.31	0.56	5/16	0.1
7/8	040012	456234	1.50	0.56	5/16	0.2
15/16	040013	—	1.63	0.56	5/16	0.2
1	040014	456234	1.63	0.63	5/16	0.2
1-1/16	040015	—	1.75	0.63	5/16	0.2
1-1/8	040016	456235	1.75	0.63	5/16	0.2
1-3/16	040017	—	2.00	0.69	3/8	0.4
1-1/4	040018	456236	2.00	0.69	3/8	0.4
1-5/16	040019	—	2.13	0.69	3/8	0.4
1-3/8	040020	—	2.13	0.75	3/8	0.4
1-7/16	040021	—	2.25	0.75	3/8	0.5
1-1/2	040022	456237	2.25	0.75	3/8	0.5
1-9/16	040023	—	2.50	0.81	3/8	0.7
1-5/8	040024	—	2.50	0.81	3/8	0.6
1-11/16	040025	—	2.50	0.81	3/8	0.6
1-3/4	040026	456238	2.75	0.88	1/2	0.8
1-7/8	040027	—	2.75	0.88	1/2	0.8
1-15/16	040028	—	3.00	0.88	1/2	1.0
2	040029	456239	3.00	0.88	1/2	1.0
2-3/16	040030	—	3.25	0.94	1/2	1.2
2-1/4	040031	—	3.25	0.94	1/2	1.2
2-7/16	040032	—	3.50	1.00	1/2	1.4
2-1/2	040033	—	3.50	1.00	1/2	1.3
2-15/16	040034	—	4.25	1.13	1/2	2.2

Note: Steel is mild carbon steel.
Stainless is 300-series stainless.
All sizes are fitted with one set screw.

Solid iron

Shaft size	Part number	Dimensions		
		OD (A)	Width (B)	Wt.
1-15/16	010020	3.38	1.38	2.5
2	010021	3.38	1.38	2.5
2-3/16	010024	3.75	1.38	3.0
2-7/16	010028	4.25	1.50	4.3
2-1/2	010029	4.25	1.50	4.3
2-11/16	010032	4.75	1.50	5.0
2-15/16	010036	5.00	1.63	5.6
3-3/16	010039	5.50	1.63	7.0
3-7/16	010043	5.75	1.75	7.6
3-15/16	010048	6.50	1.88	10.0
4-7/16	010051	7.25	2.00	12.0
4-15/16	010054	8.00	2.13	16.3
5-7/16	010055	8.75	2.13	18.5
5-15/16	010056	9.25	2.25	23.0
6	010057	9.25	2.25	23.0
6-1/2	010058	10.00	2.25	25.0
7	010059	10.50	3.38	32.0
7-1/2	010060	11.38	2.50	35.0
8	010061	12.13	2.88	45.0

Note: Solid and Split iron collars have one set screw through 3-1/4" bore size.
3-3/16" and larger bores have two set screws.

Split iron

Shaft size	Part number	Dimensions		
		OD (A)	Width (B)	Wt.
1-1/8	010075	3.13	1.25	1.3
1-3/16	010076	3.13	1.25	1.3
1-1/4	010077	3.13	1.25	1.3
1-5/16	010078	3.38	1.44	1.8
1-7/16	010080	3.38	1.44	1.8
1-1/2	010081	3.38	1.44	1.8
1-11/16	010084	3.75	1.56	2.4
1-3/4	010085	3.75	1.56	2.4
1-15/16	010088	4.06	1.75	2.6
2	010089	4.06	1.75	2.6
2-3/16	010092	4.50	1.88	3.4
2-1/4	010093	4.50	1.88	3.4
2-7/16	010096	4.44	1.88	3.8
2-1/2	010097	4.88	2.00	4.3
2-11/16	010100	5.31	2.06	5.4
2-15/16	010104	5.50	1.88	4.6
3	010105	5.50	1.88	4.4
3-3/16	010107	6.06	2.38	8.0
3-7/16	010110	6.06	2.38	6.0
3-11/16	010112	6.81	2.63	10.6
3-15/16	010114	7.00	2.75	9.0
4-7/16	010117	8.13	3.31	17.0
4-15/16	010120	8.50	3.25	20.8
5-7/16	010123	9.00	3.25	23.0
5-15/16	010126	9.50	3.25	23.7
6	010127	10.13	4.06	35.0
6-1/2	010128	11.00	4.25	41.0
7	010129	12.00	4.50	46.0
7-1/2	010130	12.94	4.69	56.0
8	010131	13.50	4.88	71.0

Notes

Accessories

B29-1 Accessories
B29-2 Features and benefits
B29-6 How to order
B29-7 Nomenclature
B29-8 Dimensions
B29-8 Light-duty (LD)
B29-12 Heavy-duty (HD)
B29-18 Top-angle (TP)
B29-20 Top-angle heavy-duty universal (TPHU)
B29-22 Center-pull (CP)
B29-26 Telescoping (TS)
B29-29 Bronzoil (BOTU)
B29-30 IIoT technologies

Features and benefits

Take-up frame overview



Light duty take-up frame – LD

Six sizes of **LD protected screw take-up frames** - forty-five (45) take-up frames with 6 to 48 inch travel for:

- SC/SCB (ball bearing) pillow blocks from 1/2” through 2-15/16” bore size.
- SXR/SXRB & SXV/SXVB (ball bearing) pillow blocks from 1/2” through 2-7/16” bore size
- DL/DLB (ball bearing) pillow blocks from 3/4” through 2-15/16” bore size.
- SCM (ball bearing) pillow blocks from 1-7/16” through 3-1/2” bore size.
- DLM (ball bearing) pillow blocks from 1” through 3-7/16” bore size
- Babbitted (sleeve) solid journal bearing from 1/2” through 2-15/16” bore size.
- Solidlube (sleeve) LT700 and LT1000 series pillow blocks from 3/4” through 3” bore size.
- Solidlube (sleeve) LTB700 and LTB1000 series pillow blocks from 3/4” through 2-1/2” bore size.
- Unisphere (spherical roller) two (2) bolt base pillow block from 1-7/16” through 3-1/2” bore sizes.
- Safety Mount (spherical roller) two (2) bolt base pillow block from 1-7/16” through 3-15/16” bore size.
- GT/GTB (ball bearing) pillow blocks from 1/2” through 2-15/16” bore size
- GTM (ball bearing) pillow blocks from 1” through 3-7/16” bore size

Take-up frame overview

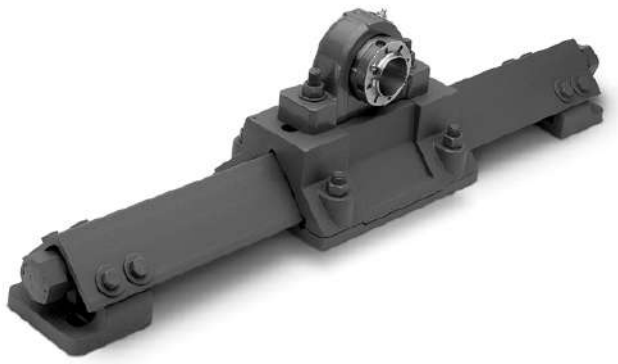

Heavy-duty take-up frame – HD

Eight sizes of **HD protected screw take-up frames** – forty-one (41) take-up frames with travels from 12 to 60 inches for:

- Angle babbitted (sleeve) pillow blocks from 1-15/16” through 5-15/16”, bore size
- Angle Bronze-Bushed (sleeve) pillow blocks from 1-15/16” through 5-15/16”, bore size
- Type E (taper roller) pillow blocks from 1-1/2” through 6” bore size
- Type K (taper roller) pillow blocks from 1-1/2” through 3-15/16” bore size
- K/DI (taper roller) pillow blocks from 1-1/2” through 5” bore size
- Type C (taper roller) pillow blocks from 1-11/16” through 5” bore size
- Special Duty (taper roller) pillow blocks from 2-11/16” through 6” bore size
- Solildlube (sleeve) MM700 and MM1000 Series pillow blocks from 3-7/16” through 5” bore size
- SAF-XT, TAF, ISAF, etc. (spherical and tapered roller) pillow blocks from 1-15/16” through 5-1/2” bore size and larger
- USAF, SAFS spherical pillow blocks, 2-bolt and 4-bolt from 2-7/16” through 5-1/2” bore size
- S-2000 spherical pillow blocks, 2-bolt and 4-bolt from 1-7/8” through 5” bore size
- Unisphere (spherical roller) pillow block 2-bolt base from 1-15/16” through 4” bore sizes
- Safety Mount (spherical roller) pillow block 2-bolt and 4-bolt from 1-15/16” through 4-15/16” bore size
- For larger bore bearings use HD600 or HD650, consult Dodge Application Engineering

Take-up frame overview



Top angle take-up frame – TP

Six sizes of **top angle take-up frames** – thirty-six (36) take-up frames with travels of 12 to 48 inches for:

- GLT-700 & GLT-1000 Series (Solidlube sleeve) take-up bearings from 1-15/16” through 3” shaft size.
- Type H (babbitted sleeve) take-up bearings from 1-15/16” through 3-15/16” shaft size.
- Type G (SC ball bearing) take-up bearings from 1-15/16” through 2-15/16” shaft size.
- Type GXR (SXR ball bearing) take-up bearings from 1-15/16” through 2-7/16” shaft size.
- Type GM (SCM ball bearing) take-up bearings from 1-11/16” through 3-1/2” shaft size.
- Type E (tapered roller) take-up bearings from 1-3/4” through 4” shaft size.
- Type K (tapered roller) take-up bearings from 1-3/4” through 3-15/16” shaft size.
- TP S2000 (spherical roller) take-up bearings from 1-7/8” through 4” shaft size.



Top-angle heavy-duty universal take-up frame – TPHU

Six sizes of **Top-angle heavy-duty universal take-up frames** – twenty-four (24) take-up frames with travels of 12 to 36 inches for:

- TPHU S-2000 (spherical roller) take-up bearings from 1-7/8” through 5” shaft size

Take-up frame overview



Center-pull take-up frame – CP

Nine sizes of **center-pull wide-slot take-up frames** – forty-five (45) take-up frames with travels of 12 to 36 inches for:

- Type E tapered wide-slot bearing from 1-3/8” to 3” bore size
- Type K tapered wide-slot bearing from 1-3/8” to 3” bore size
- S-2000 spherical wide-slot bearing from 1-1/8” to 5” bore size
- Safety Mount spherical wide-slot bearing from 1-7/16” to 4” bore size



Telescoping take-up frame - TS

Telescoping take-up frames

- Space saving telescoping take-up frame quickly mounts to the side of a conveyor
- Use any standard ball or roller bearing 2-bolt pillow block
- Factory lubricated adjustment screw
- Internal take-up frame screw is protected from the surrounding environment
- Bearing mounting plate is standard on all Dodge telescoping take-up frames.

Available options

- Four bolt mounting plate (4B)
- Tapped base mounting plate (TB)
- Weld-on frame, without mounting feet (WF)
- Stainless steel (SS)
- Grease fitting (GF)



Bronzoil take-up frame – BOTU

One size of **Bronzoil sleeve bearing take-up frames** – the Bronzoil take-up is recommended for light-to-medium loads and for use at moderate speeds; such as package conveyors, light material handling installations, or other similar applications.

- There are 6 take-ups from 1/2” through 1” shaft size with 4 inch travel

How to order

Take-up frame

There are two ways to specify Dodge take-up frames. Most of the product offerings have part numbers with listings shown throughout this catalog. Use of part numbers ensures accurate order processing.

When part numbers are not shown, the product may be specified by description or part name. This method is used when ordering units that include modifications or options. To order by description, use the nomenclature key and add any special instructions to the end of the description for options not covered by the nomenclature.

Note: All take-up frames, except Bronzoil take-ups, are without the take-up bearings. Thus, for a complete take-up, order a take-up frame and take-up bearing.

The HD protected screw take-up frames

HD 200 through HD 350 take-up frames will accommodate pillow blocks on saddles which are slotted for 2-bolt pillow blocks and may be ordered by part numbers. When using 4-bolt pillow blocks, or on HD frames 400 and larger, please supply:

1. Bore size of pillow block
2. Type of block (Type E, Double Interlock, SAF-XT, etc.)
3. Whether pillow block is 2-or 4-bolt style
4. Frame travel

Modifications

Certain modifications are available upon request, such as stainless-steel screws and non-standard travel lengths. For OEM special take-up frames, consult Application Engineering at +1 864 284 5700.

Nomenclature

Take-up frame

HD 400X12 TUFR

Style
LD = Light-duty
HD = Heavy-duty
TP = Top-angle
TPHU = Top-angle heavy-duty universal
CP = Center-pull
BOTU = Bronzoil
FR = Frame
SSS = Stainless-steel screw

Size
Frame size designation

Travel
Inches of travel

Product
Take-up frame

Dimensions

Take-up frame – inch

Light-duty (LD)

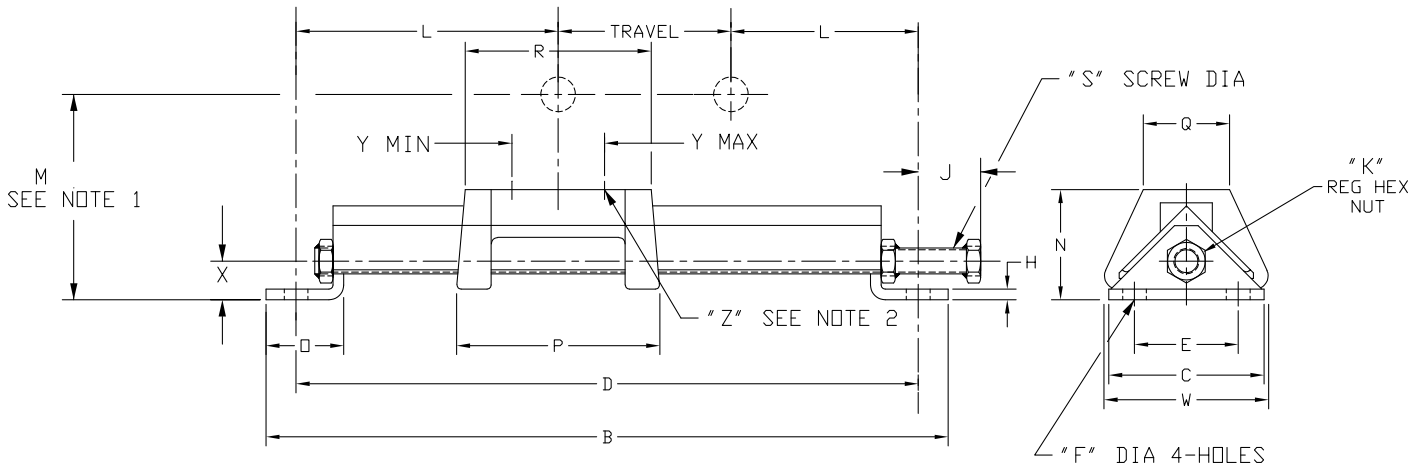

Max recommended housing cap load (90° load angle)*

Frame size	Housing cap load (lbs)
LD-10	2100
LD-20	3900
LD-30	6200
LD-40	6200
LD-45	9100
LD-50	12500

* Consult Application Engineering for loads greater than listed. In all cases, when loads are heavy, the L_{10} life of the bearing should be checked for proper selection and life requirements.

Take-up frame – inch

Light-duty (LD)

Frame size x travel	Part number	Weight	B	C	D	E	F bolt dia.	H	J	K	L	N	O
LD-10x6	039005	10	19-1/2	3-3/4	18	2-1/2	3/8	1/4	9/16	9/16	6	2-3/4	2-1/8
LD-10x9	039006	11	22		20-1/2						5-3/4		
LD-10x12	038910	13	25		23-1/2						5-3/4		
LD-10x18	038911	14	31		29-1/2						5-3/4		
LD-10x30	038912	16	43		41-1/2						5-3/4		
LD-10x36	038913	18	49		47-1/2						5-3/4		
LD-10x42	038914	20	55		53-1/2						5-3/4		
LD-10x48	038915	22	61		59-1/2						5-3/4		
LD-20x6	039007	12	19-1/2	3-3/4	18	2-1/2	1/2	1/4	1-3/4	9/16	6	2-19/32	2-1/8
LD-20x9	039008	13	22		20-1/22						5-3/4		
LD-20x12	039009	14	25		23-1/2						5-3/4		
LD-20x18	039010	17	33-1/2		32						7		
LD-20x24	039003	18	39-1/2		38						7		
LD-20x30	039002	20	45-1/2		44						7		
LD-20x36	039043	22	51-1/2		50						7		
LD-20x42	038916	24	57-1/2		56						7		
LD-20x48	039044	26	63-1/2		62						7		
LD-30x12	039011	18	28-1/4	3-3/4	26-3/4	2-1/2	1/2	1/4	1-3/4	9/16	7-3/8	2-11/16	2-1/8
LD-30x18	039012	21	34-1/4		32-3/4						7-3/8		
LD-30x24	039084	24	40-1/4		38-3/4						7-3/8		
LD-30x30	038917	27	46-1/4		44-3/4						7-3/8		
LD-30x36	038918	30	52-1/4		50-3/4						7-3/8		
LD-30x42	038919	33	58-1/4		56-3/4						7-3/8		
LD-30x48	038920	35	64-1/4		62-3/4						7-3/8		
LD-40x12	039013	25	28-1/4	4-3/4	26-1/2	3	5/8	5/16	1-3/4	9/16	7-1/4	3-3/16	2-1/4
LD-40x18	039014	28	34-1/4		32-1/2						7-1/4		
LD-40x24	039073	31	40-1/4		38-1/2						7-1/4		
LD-40x30	038921	34	46-1/4		44-1/2						7-1/4		
LD-40x36	038922	37	52-1/4		50-1/2						7-1/4		
LD-40x42	038923	40	58-1/4		56-1/2						7-1/4		
LD-40x48	038924	43	64-1/4		62-1/2						7-1/4		
LD-45x12	039018	50	33	5	31-1/4	3	3/4	5/16	1-9/16	11/16	9-3/4	4-1/8	2-1/2
LD-45x18	039019	55	39-1/4		37-1/2						9-3/4		
LD-45x24	039097	58	45-1/4		43-1/2						9-3/4		
LD-45x30	038925	65	51-1/4		49-1/2						9-3/4		
LD-45x36	038926	70	57-1/4		55-1/2						9-3/4		
LD-45x42	038927	75	63-1/4		61-1/2						9-3/4		
LD-45x48	038928	80	69-1/4		67-1/2						9-3/4		
LD-50x6	039004	49	27	5	25-1/4	3	3/4	5/16	1-9/16	11/16	9-5/8	4-1/8	2-1/2
LD-50x12	039015	54	33		31-1/4						9-3/4		
LD-50x18	039016	60	39-1/4		37-1/2						9-3/4		
LD-50x24	039017	65	45-1/4		43-1/2						9-3/4		
LD-50x30	038929	71	51-1/4		49-1/2						9-3/4		
LD-50x36	038930	77	57-1/4		55-1/2						9-3/4		
LD-50x48	038932	90	69-1/4		67-1/2						9-3/4		

Take-up frame – inch

Light-duty (LD)

Frame size x travel	Part number	Weight	P	Q	R	S Screw dia.	W	X	Y bolt centers		Z bolt dia.	Angle
									Max.	Min.		
LD-10x6	039005	10	5-7/8	1-1/2	5-3/8	3/4	3-1/4	15/16	4-3/8	2-7/8	3/8 x 1-1/2	2 x 2 x 1/4
LD-10x9	039006	11										
LD-10x12	038910	13										
LD-10x18	038911	14										
LD-10x30	038912	16										
LD-10x36	038913	18										
LD-10x42	038914	20										
LD-10x48	038915	22										
LD-20x6	039007	12	7-3/4	2-1/8	7-1/4	3/4	3-3/4	15/16	6-1/4	4-7/16	1/2 x 2-1/2	2 x 2 x 1/4
LD-20x9	039008	13										
LD-20x12	039009	14										
LD-20x18	039010	17										
LD-20x24	039003	18										
LD-20x30	039002	20										
LD-20x36	039043	22										
LD-20x42	038916	24										
LD-20x48	039044	26										
LD-30x12	039011	18	8-1/2	2-1/4	8	3/4	3-3/4	15/16	7	5-3/4	5/8 x 2-1/2	2 x 2 x 5/16
LD-30x18	039012	21										
LD-30x24	039084	24										
LD-30x30	038917	27										
LD-30x36	038918	30										
LD-30x42	038919	33										
LD-30x48	038920	35										
LD-40x12	039013	25	9-3/4	2-1/2	9-1/4	3/4	4-3/4	1-1/16	7-7/8	6-3/8	5/8 x 3	2-1/2 x 2-1/2 x 5/16
LD-40x18	039014	28										
LD-40x24	039073	31										
LD-40x30	038921	34										
LD-40x36	038922	37										
LD-40x42	038923	40										
LD-40x48	038924	43										
LD-45x12	039018	50	13-1/2	3-1/2	13	1	5-7/8	1-1/4	11-1/4	7-1/4	3/4 x 3-1/2	3 x 3 x 1/2
LD-45x18	039019	55										
LD-45x24	039097	58										
LD-45x30	038925	65										
LD-45x36	038926	70										
LD-45x42	038927	75										
LD-45x48	038928	80										
LD-50x6	039004	49	13-1/2	3-1/2	13	1	5-7/8	1-1/4	11-1/8	7-5/8	7/8 x 4	3 x 3 x 1/2
LD-50x12	039015	54										
LD-50x18	039016	60										
LD-50x24	039017	65										
LD-50x30	038929	71	13-1/2	3-1/2	13	1	5-7/8					
LD-50x36	038930	77										
LD-50x48	038932	90										

Take-up frame bearings – inch

Light-duty (LD) spherical roller and plain bearings

Safety Mount IP

Shaft size	Frame size
1-1/8 1-3/16 1-1/4 1-3/8 1-7/16 1-1/2	LD-20
1-5/8 1 11/16 1-3/4	LD-20
1-7/8 1 15/16 2	LD-30
2-3/16 2-1/4	LD-40
2-3/8 2-7/16 2-1/2	LD-40
2-11/16 2-3/4 2-15/16 3	LD-45
3-3/16 3-1/4 3-7/16 3-1/2	LD-50

* LD frames are drilled for two bolt pillow blocks.

S-2000

Shaft size	Frame size
1-3/8 1-7/16 1-1/2	LD-20
2-11/16 1-3/4	LD-20
1-15/16 2	LD-30
2-3/16	LD-40
2-7/16	LD-40
2-11/16 2-15/16 3	LD-45
3-7/16	LD-50

Unisphere II

Shaft size	Frame size
1-7/16 1-1/2 1-11/16 1-3/4	LD-20
1-15/16 2	LD-30
2-3/16 2-7/16 2-1/2	LD-40
2-11/16 2-3/14 2-15/16 3	LD-45
3-7/16 3-1/2	LD-50

Solidlube – LT-700 and LT-1000 series

Series	Shaft size	Frame size
204	1 (25 mm)	LD-20
205	1-3/6 1-1/4 (30 mm)	LD-20
206	1-7/16 (35 mm)	LD-20
207	1-1/2 (40 mm)	LD-20
209	1-11/16 1-3/4 (45 mm)	LD-30
210	1-15/16 2 (50 mm)	LD-40
211	2-3/16 2-1/4 (55 mm)	LD-40
212	2-7/16 2-1/2 (65 mm)	LD-45
215	2-11/16 (70 mm)	LD-50

Babbitted

Shaft size	Frame size
1/2 to 1-1/4	LD-10
1-11/16 1-3/4	LD-20
2-15/16	LD-45

Take-up frame – inch

Heavy-duty (HD)

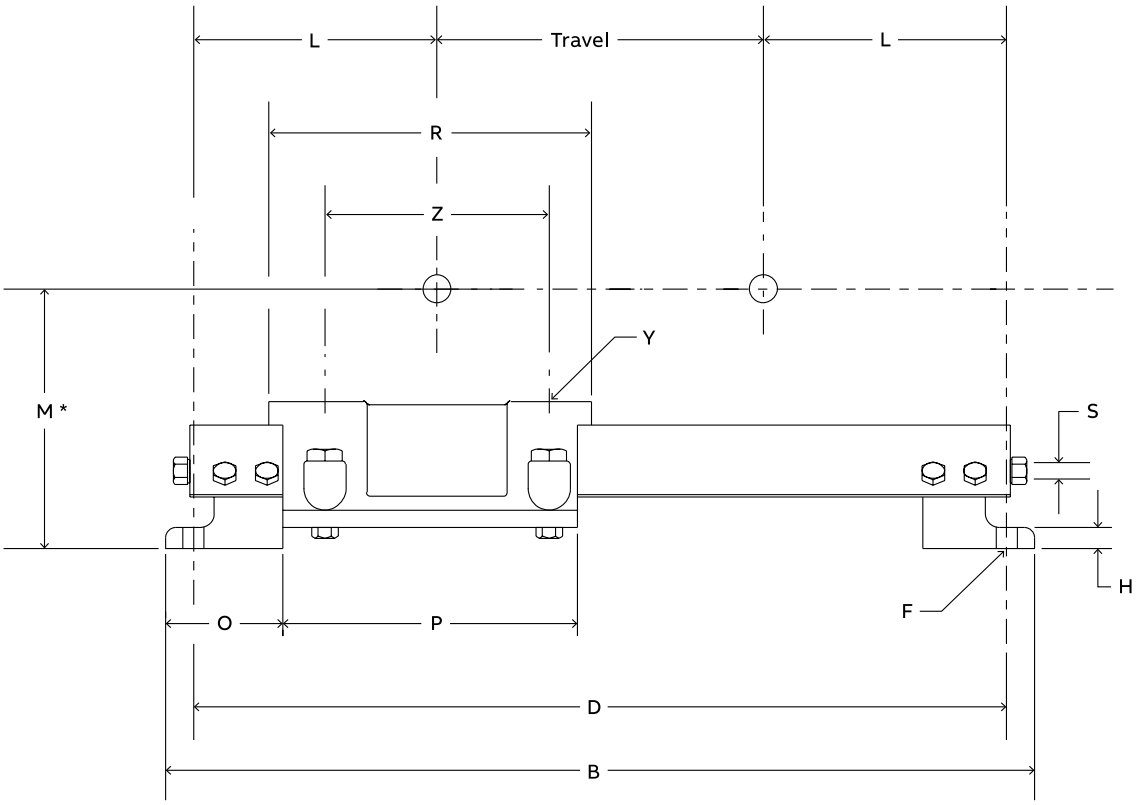

*M = N + Pillow block base to center dimemsion

The HD protected screw take-up frames

HD 200 through HD 350 take-up frames will accommodate pillow blocks on saddles which are slotted for 2-bolt pillow blocks and may be ordered by part numbers. When using 4-bolt pillow blocks, or on HD frames 400 and larger, please supply:

1. Bore size of pillow block
2. Type of block (Type E, Double Interlock, SAF-XT, etc.)
3. Whether pillow block is 2-or 4-bolt style
4. Frame travel

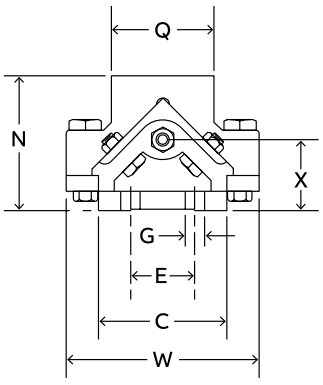

Take-up frame – inch

Heavy-duty (HD)

Frame size	Travel	Part number ** ◆	Frame weight	B	C	D
HD-200*	12	089020	79	31	5	29
	18	089021	82	37	5	35
	24	089022	90	43	5	41
	30	089023	95	47	5	47
	36	089024	100	55	5	53
	48	089150	110	67	5	65
HD-250*	12	089151	115	35-1/4	6	32-3/4
	18	089025	125	41-1/4	6	38-3/4
	24	089026	135	47-1/4	6	44-3/4
	30	089027	137	53-1/4	6	50-3/4
	36	089028	143	59-1/4	6	56-3/4
	48	089152	153	71-1/4	6	68-3/4
	60	089600	163	83-1/4	6	80-3/4
HD-300*	12	089153	175	38-1/4	6-1/2	35-1/2
	18	089029	184	44-1/4	6-1/2	41-1/2
	24	089030	194	50-1/4	6-1/2	47-1/2
	30	089031	206	56-1/4	6-1/2	53-1/2
	36	089032	214	62-1/4	6-1/2	59-1/2
	48	089033	240	74-1/4	6-1/2	71-1/2
	60	089601	266	86-1/4	6-1/2	83-1/2
HD-350*	12	089154	195	40	6-1/2	37-1/4
	18	089034	204	46	6-1/2	43-1/4
	24	089035	212	52	6-1/2	49-1/4
	30	089036	220	58	6-1/2	55-1/4
	36	089037	234	64	6-1/2	61-1/4
	48	089038	250	76	6-1/2	73-1/4
	60	089602	276	88	6-1/2	85-1/4
HD-400**	12	089155	340	44	6-1/2	41-1/4
	18	089039	350	50	6-1/2	47-1/4
	24	089040	360	56	6-1/2	53-1/4
	30	089041	370	62	6-1/2	59-1/4
	36	089042	380	68	6-1/2	65-1/4
	48	089043	400	80	6-1/2	77-1/4
	60	089603	420	92	6-1/2	89-1/4
HD-500**	12	089156	420	49-1/2	7	47
	18	089044	440	55-1/2	7	53
	24	089045	460	61-1/2	7	59
	30	089046	480	67-1/2	7	65
	36	089047	500	73-1/2	7	71
	48	089048	530	85-1/2	7	83
	60	089604	560	97-1/2	7	95

Frame size	E	F bolt dia.	G dia.	H	L	N	O	P	Saddle *dimensions		S Screw dia.	W	X	Y bolt dia.	Z	
									Q	R					Max.	Min.
HD-200	2-1/2	5/8	3/4	3/4	8-1/2	5-1/4	4	11	4	11	1	7-1/2	2-9/16	5/8	9-1/16	5-15/16
HD-250	3	5/8	3/4	3/4	10-3/8	6-1/4	5	13-1/4	4-1/2	13	1	8-1/4	3-1/4	3/4	10-7/8	7-5/8
HD-300	3	3/4	7/8	7/8	11-3/4	7	6	14-1/4	5	14	1-1/4	10	3-1/2	3/4	11-5/8	9-1/4
HD-350	3	3/4	7/8	7/8	12-5/8	7	6	16	6	17	1-1/4	10	3-1/2	7/8	13-11/16	10-3/4
HD-400	3	3/4	7/8	7/8	14-5/8	7	6	20	7-1/4	20	1-1/4	10	3-1/2	◆	◆	◆
HD-500	4	7/8	1	1	17-1/2	7-3/4	6-3/4	23-1/2	8-1/2	23-1/2	1-1/2	12-1/2	3-21/32	◆	◆	◆

Consult Dodge for HD600 and HD650 take-up frames, for large bore bearings.
◆ Solid saddle must be drilled and tapped per order (HD-400 and HD500 frames)
* Saddle is slotted to receive 2-bolt blocks.
** For 4-bolt pillow blocks, all HD frames must be drilled and tapped per order.

Take-up frame – inch

Heavy-duty (HD)

Heavy-duty (HD) take-up frames for use with non-Dodge bearings

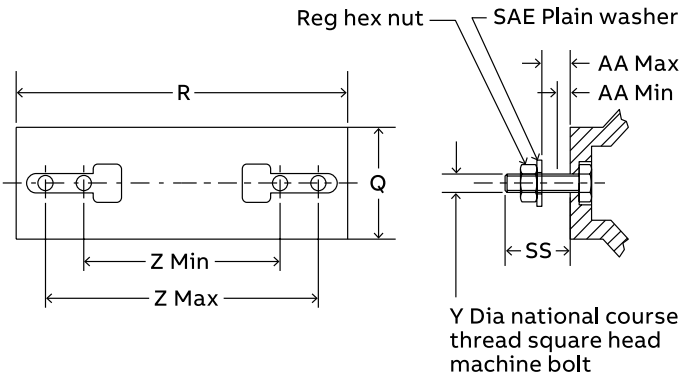

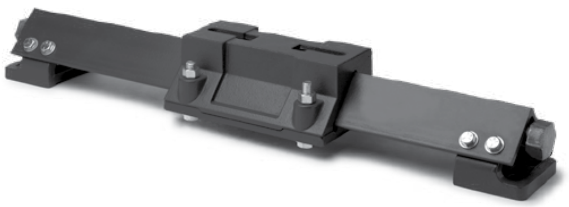

Slotted saddle type HD frames (200 through 350 sizes) may be used with 2-bolt pillow blocks other than Dodge pillow blocks listed in tables on previous pages. The dimensions shown below are listed to determine whether frame is applicable to this type of application.

Frame size	AA		Saddle dimensions	
	Min.	Max.	Q	R
HD-200	2	3-1/64	4	11
HD-250	2-5/8	3-13/16	4-1/2	13
HD-300	2-31/32	4-5/32	5	14
HD-350	2-27/32	4-11/16	6	17
HD-400	—	—	7-1/4	20
HD-500	—	—	8-1/2	23-1/2

Frame size	Y Bearing hold down bolts			SS	Z bolt centers	
	Diameter	Part number	Length under head		Max.	Min.
HD-200	5/8-11	416173	4	3-5/8	9-7/16	5-15/16
HD-250	3/4-10	416229	5	4-17/32	10-7/8	7-5/8
HD-300	3/4-10	416231	5-1/2	4-7/8	11-5/8	9-1/4
HD-350	7/8-9	416275	5-1/2	5	13-11/16	10-3/4

Note: The pillow blocks must use the bolt shown and have the capability of mounting between the Z bolt centers.
The height off the mounting bolt pad must be within the AA dimensions.
HD-400 and larger are drilled and tapped per order. Specify bearing type when ordering. Y, SS, and 2 dimensions are specified based on order.

Max recommended housing cap load (90° load angle)*

Frame size	Housing cap load (lbs)
HD-200	2800
HD-250	4200
HD-300	4200
HD-350	3500
HD-400	***
HD-500	***

* Consult Application Engineering for loads greater than listed. In all cases, when loads are heavy, the L_{10} life of the bearing should be checked for proper selection and life requirements.

Take-up frame bearings – inch

Heavy-duty (HD) tapered roller bearings

Type E

Shaft size	Frame size
1-1/2 to 2-1/2	HD-200 *
2-11/16 to 3	HD-250 *
3-3/16 to 3-1/2	HD-350 *
3-15/16 to 5	HD-400 **
5-7/16 to 6	HD-500 **

* LD frames are drilled for two bolt pillow blocks.

TAF

Shaft size	Frame size
2-7/16 to 2-1/2	HD-200 *
2-15/16 to 3	HD-250 *
3-7/16 to 4	HD-350 *
4-7/16 to 5	HD-400 **
5-7/16	HD-500 **

Double Interlock, Type K

Shaft size	Frame size
1-1/2 to 2-3/16	HD-200 *
2-1/4 to 2-1/2	HD-250 *
2-11/16 to 3	HD-300 *
3-3/16 to 3-1/2	HD-350 *
3-15/16 to 4-1/2	HD-400 **
4-15/16 to 5	HD-500 **

* HD-200, HD-250, HD-300 and HD 350 frames are drilled for 2-bolt pillow blocks. For 4-bolt pillow blocks, refer to note on page B29-12.
** HD-400 and larger are drilled and tapped per order. Specify bearing type when ordering.

Take-up frame bearings – inch

Heavy-duty (HD) specialty tapered roller and plain bearings

Special Duty

Shaft size	Frame size
1-3/8 to 2	HD-200
2-1/8 to 2-1/2	HD-250
2-3/8 to 3	HD-300
3-3/16 to 3-1/2	HD-350
3-11/16 to 4	HD-400**
4-7/16 to 5	HD-500**

Type C

Shaft size	Frame size
1-3/8 to 1-15/16	HD-200
2 to 2-7/16	HD-250
2-3/8 to 2-15/16	HD-300
3 to 3-7/16	HD-350
3-1/2 to 4	HD-400**
4-7/16 to 5	HD-500**

Solidlube – MM-700 and MM-1000 series

Shaft size	Frame size
3-7/16 3-1/2	HD-250 *
3-15/16 4	HD-300 *
4-7/16 4-1/2	HD-350 *
4-15/16 5	HD-400 **

Angle babbitt, bronze babbitt

Shaft size	Frame size
1-15/16 2-3/16 2-7/16	HD-200 *
2-11/16 2-15/16	HD-250 *
3-7/16	HD-300 *
3-15/16	HD-350 *
4-7/16 4-15/16	HD-400 **
5-7/16 5-15/16	HD-500 **

* HD-200, HD-250, HD-300 and HD 350 frames are drilled for 2-bolt pillow blocks. For 4-bolt pillow blocks, refer to note on page B29-12.
** HD-400 and larger are drilled and tapped per order. Specify bearing type when ordering.

Take-up frames bearings – inch

Heavy-duty (HD) spherical roller bearings

Safety Mount – IP

Shaft size	Frame size
1-1/8 to 2-1/2	HD-200 *
2-11/16 2-3/4 2-15/16 3	HD-250 *
3-3/16 3-1/4 3-7/16 3-1/2	HD-300 *
3-11/16 3-15/16 4 4-7/16 4-1/2	HD-350 *
4-15/16 5	HD-400 **

* LD frames are drilled for two bolt pillow blocks.

S-2000

Shaft size	Frame size
1-3/8 1-7/16 1-1/2 1-11/16 1-3/4 1-15/16 2 2-3/16 2-7/16 2-11/16	HD-200 *
2-15/16 3	HD-250 *
3-7/16	HD-300 *
3-15/16 4-7/16	HD-350 *
4-15/16	HD-400 **

Unisphere II

Shaft size	Frame size
1-15/16 2 2-3/16 2-7/16 2-1/2	HD-200
2-11/16 2-3/4 2-15/16 3	HD-250
3-7/16 3-1/2	HD-300
3-15/16 4	HD-350

Safety Mount ISAF, USAF 500, SAF-XT, SAFS

Shaft size	Frame size
1-15/16 to 2-3/16	HD-200 *
2-7/16 to 3	HD-250 *
3-3/16	HD-300 *
3-7/16 to 3-1/2	HD-350 *
3-15/16 to 4-1/2	HD-400 **
4-15/16 to 5-1/2	HD-500 **

* HD-200, HD-250, HD-300 and HD 350 frames are drilled for 2-bolt pillow blocks. For 4-bolt pillow blocks, refer to note on page B29-12.
** HD-400 and larger are drilled and tapped per order. Specify bearing type when ordering.

Take-up frame – inch

Top-angle (TP)

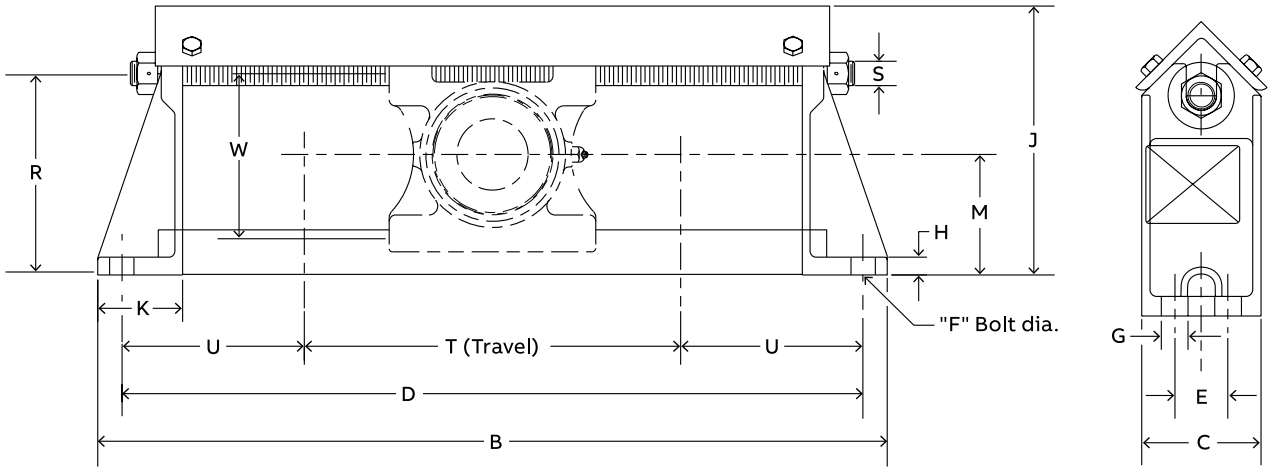

Frame size	Nominal travel	Part number	Weight	B	C	D	E	F bolt dia.	G	H	J	K	M	R	S screw dia.	T	U	W
	12	036350	32	28-1/2		26-1/2						3				14-1/2		
TP10	18	036351	36	34-1/2	3-1/2	32-1/2	—	5/8	1	3/4	8-1/2	3	3-15/16	6-11/32	3/4	20-1/2	6	5-5/32
	24	036352	41	40-1/2		38-1/2						3				26-1/2		
	12	036353	34	29-1/2		27-1/2						3				15		
TP20	18	036354	39	35-1/2	3-1/2	33-1/2	—	5/8	1	3/4	9-1/8	3	4-3/16	6-31/32	3/4	21	6-1/4	5-25/32
	24	036355	43	41-1/2		39-1/2						3				27		
	12	036356	47	30-1/2		28-1/2						3-1/2				14-1/2		
TP30	18	036357	54	36-1/2	4	34-1/2	—	3/4	1-5/16	3/4	10-1/8	3-1/2	4-3/8	7-3/8	1	20-1/2	7	6-3/16
	24	036358	60	42-1/2		40-1/2						3-1/2				26-1/2		
	12	036359	52	32-1/2		30-1/2						3-1/2				15-1/2		
TP40	18	036360	60	38-1/2	4-1/2	36-1/2	2	5/8	1	3/4	11-1/16	3-1/2	4-15/16	8-3/8	1	21-1/2	7-1/2	7-3/16
	24	036361	66	44-1/2		42-1/2						3-1/2				27-1/2		
	12	036362	63	34-1/2		32						4				15		
TP50	18	036363	70	40-1/2	4-1/2	38	2	3/4	1	3/4	12-1/2	4	5-7/16	9-13/32	1-1/4	21	8-1/2	8-7/32
	24	036364	79	46-1/2		44						4				27		
	12	036365	84	38-1/2		36						4-1/2				16-1/2		
TP60	18	036366	92	44-1/2	5-1/2	42	2-1/2	3/4	1	3/4	14-1/4	4-1/2	7	11-11/32	1-1/4	22-1/2	9-5/8	8-29/32
	24	036367	102	50-1/2		48						4-1/2				28-1/2		

Take-up frame bearings – inch

Top-angle (TP) tapered, spherical, and sleeve bearings

Type E

Shaft size	Frame size
1-3/4 1-7/8 1-15/16 2	TP-10
2-3/16	TP-20
2-1/4 2-7/16 2-1/2	TP-30
2-11/16 2-3/4 2-15/16 3	TS-40
3-3/16 3-1/4 3-7/16 3-1/2	TP-50
3-15/16 4	TP-60

Type K

Shaft size	Frame size
1-3/4 1-15/16 2	TP-10
2-3/16	TP-20
2-1/4 2-7/16 2-1/2	TP-30
2-11/16 2-3/4 2-15/16 3	TS-40
3-3/16 3-7/16 3-1/2	TP-50
3-15/16	TP-60

S-2000

Shaft size	Frame size
1-15/16 2	TP-10
2-3/16	TS-30
2-7/16	TS-40
2-11/16 2-15/16 3	TP-40
3-7/16	TP-50
3-15/16	TS-60

Solidlube – LT-700 and LT-1000 series

Shaft size	Frame size
1-15/16 2	TP-10
2-3/16	TP-20
2-7/16 2-1/2	TP-30
2-15/16 3	TS-40

Take-up frame – inch

Top-angle heavy-duty universal (TPHU)

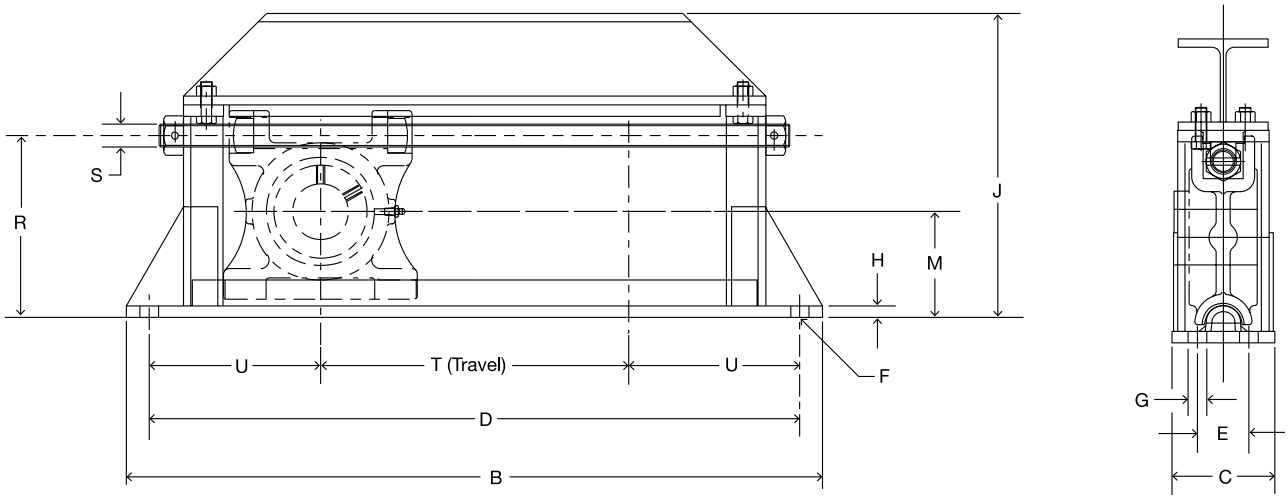

Shaft size	Frame size	Nominal travel	Part number	Weight	B	C	D	E	F bolt dia.	G	H	J
1-7/8 1-15/16 2	TPHU110	12	013497	58	29-1/2	3-1/2	27-1/2	—	5/8	11/16	1/2	10-5/8
		18	013498	70	35-1/2		33-1/2					
		24	013499	82	41-1/2		39-1/2					
2-3/16 2-1/4	TPHU120	12	013900	71	29-1/2	4-1/2	27-1/2	—	5/8	11/16	1/2	11-1/4
		18	013901	85	35-1/2		33-1/2					
		24	013902	99	41-1/2		39-1/2					
2-3/8 2-7/16 2-1/2	TPHU130	12	013903	73	30-1/2	4-1/2	28-1/2	—	3/4	13/16	1/2	11-3/4
		18	013904	86	36-1/2		34-1/2					
		24	013905	99	42-1/2		40-1/2					
2-11/16 2-3/4 2-15/16 3	TPHU140	12	013906	80	32-1/2	4-1/2	30-1/2	2	5/8	11/16	3/4	12-5/16
		18	013907	93	38-1/2		36-1/2					
		24	013908	106	44-1/2		42-1/2					
		30	013909	119	50-1/2		48-1/2					
		36	013910	132	56-1/2		54-1/2					
3-3/16 3-1/4 3-7/16 3-1/2	TPHU150	12	013511	91	34-1/4	4-1/2	32	2	3/4	13/16	3/4	13-27/32
		18	013512	105	40-1/4		38					
		24	013513	119	46-1/4		44					
		30	013514	133	52-1/4		50					
		36	013515	147	58-1/4		56					
3-11/16 3-15/16 4	TPHU160	12	013916	132	38-1/2	5-1/2	36	2-1/2	3/4	13/16	1	17
		18	013917	150	44-1/2		42					
		24	013918	168	50-1/2		48					
		30	013519	186	56-1/2		54					
		36	013520	204	62-1/2		60					

Take-up frame and bearings – inch

Top-angle heavy-duty universal (TPHU)

Shaft size	Frame size	Nominal travel	Part number	M	R	S Screw dia.	T Max. travel	U
1-7/8 1-15/16 2	TPHU110	12	013497	3-15/16	6-5/16	3/4	13-1/2	7-3/4
		18	013498				19-1/2	
		24	013499				25-1/2	
2-3/16 2-1/4	TPHU120	12	013900	4-7/16	7-7/16	1	13-1/2	7
		18	013901				19-1/2	
		24	013902				25-1/2	
2-3/8 2-7/16 2-1/2	TPHU130	12	013903	4-5/8	7-61/64	1	13-1/2	7-1/2
		18	013904				19-1/2	
		24	013905				25-1/2	
2-11/16 2-3/4 2-15/16 3	TPHU140	12	013906	5-1/8	8-1/2	1	15-1/2	7-1/2
		18	013907				21-1/2	
		24	013908				27-1/2	
		30	013909				33-1/2	
		36	013910				39-1/2	
3-3/16 3-1/4 3-7/16 3-1/2	TPHU150	12	013511	5-5/8	9-23/32	1-1/4	15-1/2	8-1/4
		18	013512				21-1/2	
		24	013513				27-1/2	
		30	013514				33-1/2	
		36	013515				39-1/2	
3-11/16 3-15/16 4	TPHU160	12	013916	7	11-5/8	1-1/4	16-1/2	9-3/4
		18	013917				22-1/2	
		24	013918				28-1/2	
		30	013519				34-1/2	
		36	013520				40-1/2	

S-2000 spherical roller bearings

Shaft size	Frame size
1-15/16 2	TPHU-110
2-3/16	TPHU-120
2-7/16	TPHU-130
2-11/16 2-15/16 3	TPHU-140
3-7/16	TPHU-150
3-15/16	TPHU-150

Take-up frame – inch

Center-pull (CP)

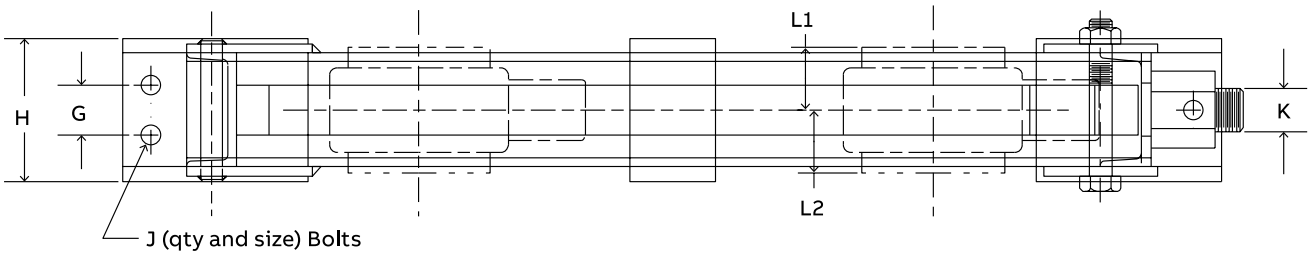

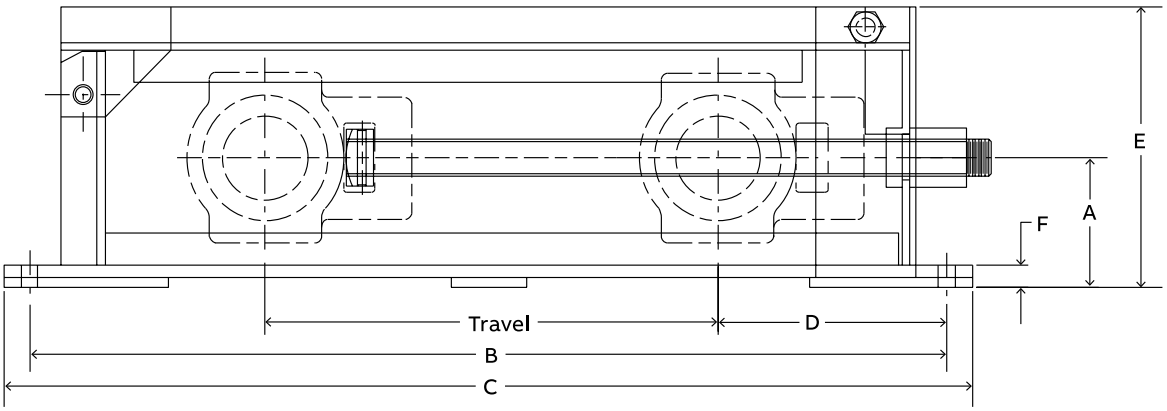

Take-up frame – inch

Center-pull (CP)

Frame size	Travel	Frame part number	Frame weight	Travel Maximum		A	B	C	D		E	F	G	H	J		K	L1 and L2
				S-2000 Safety Mount IP	Type E Type K				S-2000 Safety Mount IP	Type E Type K					Qty	Size dia.		
CP308	12	019200	30	15-15/32	15-15/32		26	28									3/4-10NC	
CP308	18	019201	34	21-15/32	21-15/32		32	64									3/4-10NC	
CP308	24	019202	38	27-15/32	27-15/32	3-7/16	38	40	6	6	7	11/16	—	3	2	1/2	3/4-10NC	
CP308	30	019203	42	33-15/32	33-15/32		44	46									3/4-10NC	
CP308	36	019204	46	39-15/32	39-15/32		50	52									3/4-10NC	
CP400	12	019210	55	14-27/32	14-23/32		27-1/2	29-1/2									1-8NC	
CP400	18	019211	65	20-27/32	20-23/32		33-1/2	35-1/2									1-8NC	
CP400	24	019212	75	26-27/32	26-23/32	3-15/16	39-1/2	41-1/2	7-1/4	7-1/4	8-5/8	13/16	—	4	2	5/8	1-8NC	
CP400	30	019213	85	32-27/32	32-23/32		45-1/2	47-1/2									1-8NC	
CP400	36	019214	95	38-27/32	38-23/32		51-1/2	53-1/2									1-8NC	
CP408	12	019220	61	14-5/32	14-3/32		27-1/2	29-1/2									1-1/8-7NC	
CP408	18	019221	71	20-5/32	20-3/32		33-1/2	35-1/2									1-1/8-7NC	
CP408	24	019222	81	26-5/32	26-3/32	4-7/16	39-1/2	41-1/2	7-3/4	7-3/4	9-1/4	11/16	—	4	2	5/8	1-1/8-7NC	
CP408	30	019223	85	32-5/32	32-3/32		45-1/2	47-1/2									1-1/8-7NC	
CP408	36	019224	95	38-5/32	38-3/32		51-1/2	53-1/2									1-1/8-7NC	
CP502	12	019230	65	14-13/32	12-31/32		28-1/2	30-1/2									1-1/4-7NC	
CP502	18	019231	75	20-13/32	18-31/32		34-1/2	36-1/2									1-1/4-7NC	
CP502	24	019232	85	26-13/32	24-31/32	4-3/8	40-1/2	42-1/2	8-1/4	9-9/16	9-1/2	13/16	—	4	2	3/4	1-1/4-7NC	
CP502	30	019233	95	32-13/32	30-31/32		46-1/2	48-1/2									1-1/4-7NC	
CP502	36	019234	105	38-13/32	36-31/32		52-1/2	54-1/2									1-1/4-7NC	
CP515	12	019240	105	14-23/32	14-15/32		30-1/2	32-1/2									1-1/2-6NC	
CP515	18	019241	120	20-23/32	20-15/32		36-1/2	38-1/2									1-1/2-6NC	
CP515	24	019242	135	26-23/32	26-15/32	5-1/8	42-1/2	44-1/2	9-1/4	9-3/8	11-5/32	7/8	2	5	4	5/8	1-1/2-6NC	See page B29-24
CP515	30	019243	150	32-23/32	32-15/32		48-1/2	50-1/2									1-1/2-6NC	
CP515	36	019244	165	38-23/32	38-15/32		54-1/2	56-1/2									1-1/2-6NC	
CP613	12	019250	115	15-1/32	—		32	34-1/4									1-3/4-5NC	
CP613	18	019251	135	21-1/32	—		38	40-1/4									1-3/4-5NC	
CP613	24	019252	155	27-1/32	—	5-5/8	44	46-1/4	9-7/8	—	12-1/16	15/16	2	5	4	3/4	1-3/4-5NC	
CP613	30	019253	175	33-1/32	—		50	52-1/4									1-3/4-5NC	
CP613	36	019254	195	39-1/32	—		56	58-1/4									1-3/4-5NC	
CP810	12	019260	185	16-9/32	—		36	38-1/2									2-4-1/2-NC	
CP810	18	019261	210	22-9/32	—		42	44-1/2									2-4-1/2-NC	
CP810	24	019262	235	28-9/32	—	7	48	50-1/2	12	—	14-3/4	1-3/16	2-1/2	6	4	3/4	2-4-1/2-NC	
CP810	30	019263	260	34-9/32	—		54	56-1/2									2-4-1/2-NC	
CP810	36	019264	285	40-9/32	—		60	62-1/2									2-4-1/2-NC	
CP908	12	019270	280	17-31/32	—		40-3/4	45-3/4									2-4-1/2-NC	
CP908	18	019271	310	23-31/32	—		46-3/4	51-3/4									2-4-1/2-NC	
CP908	24	019272	340	29-31/32	—	7-1/2	52-3/4	57-3/4	13-1/2	—	16-1/16	1-1/4	5	10	4	1-1/8	2-4-1/2-NC	
CP908	30	019273	370	35-31/32	—		58-3/4	63-3/4									2-4-1/2-NC	
CP908	36	019274	400	41-31/32	—		64-3/4	69-3/4									2-4-1/2-NC	
CP1004	12	019280	370	18-29/32	—		44-1/2	49-1/2									2-1/4-4-1/2-NC	
CP1004	18	019281	400	24-29/32	—		50-1/2	55-1/2									2-1/4-4-1/2-NC	
CP1004	24	019282	430	30-29/32	—	8-1/8	56-1/2	61-1/2	15-3/8	—	17-5/16	1-1/2	5-1/2	10	4	1-1/8	2-1/4-4-1/2-NC	
CP1004	30	019283	460	36-29/32	—		62-1/2	67-1/2									2-1/4-4-1/2-NC	
CP1004	36	019284	490	42-29/32	—		68-1/2	73-1/2									2-1/4-4-1/2-NC	

Take-up frame – inch

Center-pull (CP)

Frame size	Travel	Frame part number	Frame Weight	Travel Maximum		Safety Mount IP		S-2000		Type K		Type E	
				S2 and IP	Type E and K	L1	L2	L1	L2	L1	L2	L1	L2
CP308	12	019200	30	15-15/32	15-15/32								
CP308	18	019201	34	21-15/32	21-15/32								
CP308	24	019202	38	27-15/32	27-15/32	57/64	1-47/64	53/64	1-45/64	1-1/32	1-1/2	1-1/2	1-1/2
CP308	30	019203	42	33-15/32	33-15/32								
CP308	36	019204	46	39-15/32	39-15/32								
CP400	12	019210	55	14-27/32	14-23/32								
CP400	18	019211	65	20-27/32	20-23/32								
CP400	24	019212	75	26-27/32	26-23/32	53/64	1-63/64	55/64	1-13/16	1-7/32	1-3/4	1-3/4	1-3/4
CP400	30	019213	85	32-27/32	32-23/32								
CP400	36	019214	95	38-27/32	38-23/32								
CP408	12	019220	61	14-5/32	14-3/32								
CP408	18	019221	71	20-5/32	20-3/32								
CP408	24	019222	81	26-5/32	26-3/32	59/64	2-7/64	29/32	1-63/64	1-9/32	1-7/8	1-7/8	1-7/8
CP408	30	019223	85	32-5/32	32-3/32								
CP408	36	019224	95	38-5/32	38-3/32								
CP502	12	019230	65	14-13/32	12-31/32								
CP502	18	019231	75	20-13/32	18-31/32								
CP502	24	019232	85	26-13/32	24-31/32	1-13/64	2-7/32	1-13/64	2	1-5/8	2	2	2
CP502	30	019233	95	32-13/32	30-31/32								
CP502	36	019234	105	38-13/32	36-31/32								
CP515	12	019240	105	14-23/32	14-15/32								
CP515	18	019241	120	20-23/32	20-15/32								
CP515	24	019242	135	26-23/32	26-15/32	1-7/32	2-9/32	1-3/16	2-13/32	1-5/8	2-1/4	2-1/4	2-1/4
CP515	30	019243	150	32-23/32	32-15/32								
CP515	36	019244	165	38-23/32	38-15/32								
CP613	12	019250	115	15-1/32	—								
CP613	18	019251	135	21-1/32	—								
CP613	24	019252	155	27-1/32	—	1-15/32	2-11/16	1-31/64	2-33/64	—	—	—	—
CP613	30	019253	175	33-1/32	—								
CP613	36	019254	195	39-1/32	—								
CP810	12	019260	185	16-9/32	—								
CP810	18	019261	210	22-9/32	—								
CP810	24	019262	235	28-9/32	—	1-21/32	3-3/64	1-39/64	2-55/64	—	—	—	—
CP810	30	019263	260	34-9/32	—								
CP810	36	019264	285	40-9/32	—								
CP908	12	019270	280	17-31/32	—								
CP908	18	019271	310	23-31/32	—								
CP908	24	019272	340	29-31/32	—	—	—	3-1/16	3-15/32	—	—	—	—
CP908	30	019273	370	35-31/32	—								
CP908	36	019274	400	41-31/32	—								
CP1004	12	019280	370	18-29/32	—								
CP1004	18	019281	400	24-29/32	—								
CP1004	24	019282	430	30-29/32	—	—	—	3-17/64	3-41/64	—	—	—	—
CP1004	30	019283	460	36-29/32	—								
CP1004	36	019284	490	42-29/32	—								

Take-up frame bearings – inch

Center-pull (CP) tapered and spherical roller bearings

Type E

Shaft size	Frame size
1-3/16 1-7/16	CP-308
1-1/2 1-5/8 1-11/16	CP-400
1-3/4 1-7/8 1-15/16 2	CP-400
2-3/16	CP-408
2-1/4 2-7/16 2-1/2	CP-502
2-11/16 2-3/4 2-15/16 3	CP-515

Type K

Shaft size	Frame size
1-7/16	CP-308
1-15/16	CP-400
2-3/16	CP-408
2-7/16 2-1/2	CP-502
2-15/16 3	CP-515

S-2000

Shaft size	Frame size
1-3/8 1-7/16 1-1/2	CP-308
1-11/16 1-3/4	CP-400
1-15/16 2	CP-400
2-3/16	CP-408
2-7/16	CP-502
2-11/16 2-15/16 3	CP-515
3-7/16	CP-613
3-15/16	CP-810
4-7/16	CP-908
4-15/16	CP-1004

Safety Mount IP

Shaft size	Frame size
1-1/8 1-3/16 1-1/4 1-3/8 1-7/16 1-1/2	CP-308
1-5/8 1-11/16 1-3/4	CP-400
1-7/8 1-15/16 2	CP-400
2-3/16 2-1/4	CP-408
2-3/i8 2-7/16 2-1/2	CP-502
2-11/16 2-3/4 2-15/16 3	CP-515
3-3/16 3-1/4 3-7/16 3-1/2	CP-613
3-11/16 3-15/16 4	CP-810

Take-up frame – inch

Telescoping (TS)

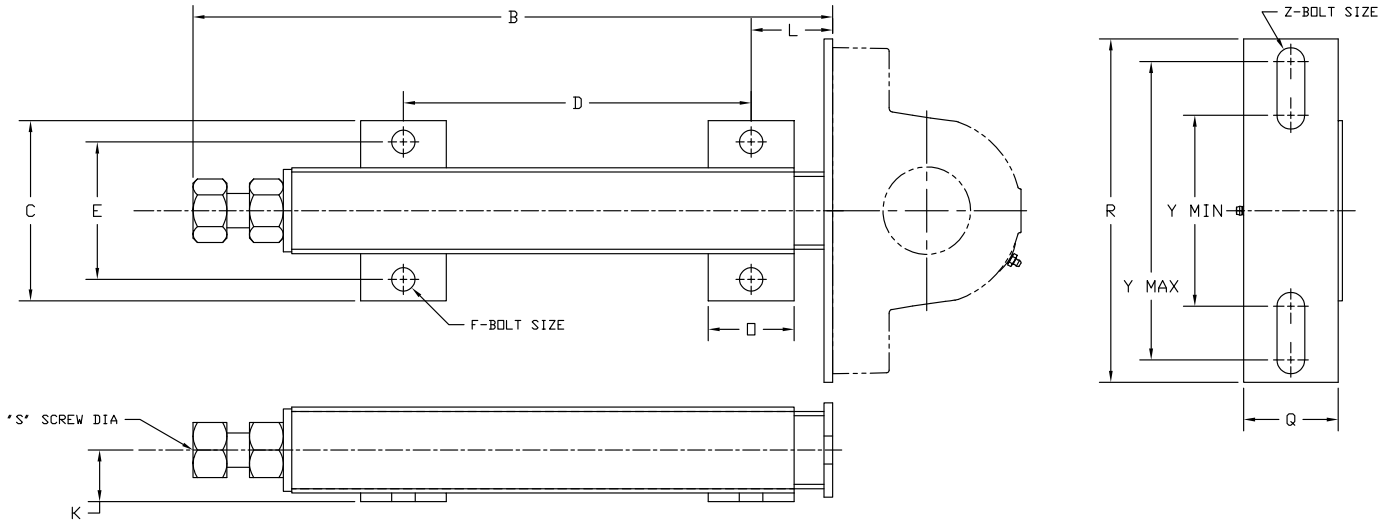

Frame size	Travel	Part number	Weight	B	C	D Min	D Max	E	F bolt dia.	K	L	O	Q	R	S scr. dia	Y Min	Y Max	Z bolt dia.
TS-100	3	089782	3	7.94	3.69	3.56	—	2.63	1/2	0.88	1.50	1.50	1.50	6.38	5/8	2.94	5.44	1/2
TS-100	6	089783	4	11.44	3.69	7.06	—	2.63	1/2	0.88	1.50	1.50	1.50	6.38	5/8	2.94	5.44	1/2
TS-100	9	089784	5	15.44	3.69	11.06	—	2.63	1/2	0.88	1.50	1.50	1.50	6.38	5/8	2.94	5.44	1/2
TS-250	3	089785	5	9.75	4.00	4.38	—	3.00	1/2	1.13	1.88	2.00	2.00	7.00	3/4	3.81	5.69	5/8
TS-250	6	089786	7	12.75	4.00	7.38	—	3.00	1/2	1.13	1.88	2.00	2.00	7.00	3/4	3.81	5.69	5/8
TS-250	9	089787	8	15.75	4.00	10.38	—	3.00	1/2	1.13	1.88	2.00	2.00	7.00	3/4	3.81	5.69	5/8
TS-250	12	089788	9	18.75	4.00	13.38	—	3.00	1/2	1.13	1.88	2.00	2.00	7.00	3/4	3.81	5.69	5/8
TS-300	6	089789	16	15.63	5.25	6.13	—	4.00	5/8	1.50	2.38	2.50	2.75	10.00	1	5.56	8.69	3/4
TS-300	9	089790	18	18.63	5.25	10.13	—	4.00	5/8	1.50	2.38	2.50	2.75	10.00	1	5.56	8.69	3/4
TS-300	12	089791	21	21.63	5.25	14.13	—	4.00	5/8	1.50	2.38	2.50	2.75	10.00	1	5.56	8.69	3/4
TS-300	18	089792	26	27.63	5.25	21.13	—	4.00	5/8	1.50	2.38	2.50	2.75	10.00	1	5.56	8.69	3/4
TS-350	9	089793	24	19.56	5.75	12.63	13.00	4.50	5/8	1.75	2.50	2.50	3.00	12.00	1	5.56	9.75	3/4
TS-350	12	089794	28	22.56	5.75	15.63	16.00	4.50	5/8	1.75	2.50	2.50	3.00	12.00	1	5.56	9.75	3/4
TS-350	18	089795	35	28.56	5.75	21.63	22.00	4.50	5/8	1.75	2.50	2.50	3.00	12.00	1	5.56	9.75	3/4
TS-350	24	089796	43	34.56	5.75	27.63	28.00	4.50	5/8	1.75	2.50	2.50	3.00	12.00	1	5.56	9.75	3/4
TS-400	12	089797	50	29.75	7.50	20.00	—	5.50	3/4	2.13	3.50	3.50	3.50	14.00	1 1/2	8.50	11.75	7/8
TS-400	18	089798	60	35.75	7.50	26.00	—	5.50	3/4	2.13	3.50	3.50	3.50	14.00	1 1/2	8.50	11.75	7/8
TS-400	24	089799	70	41.75	7.50	32.00	—	5.50	3/4	2.13	3.50	3.50	3.50	14.00	1 1/2	8.50	11.75	7/8
TS-400	36	089800	90	53.75	7.50	44.00	—	5.50	3/4	2.13	3.50	3.50	3.50	14.00	1 1/2	8.50	11.75	7/8
TS-400	48	089801	110	65.75	7.50	56.00	—	5.50	3/4	2.13	3.50	3.50	3.50	14.00	1 1/2	8.50	11.75	7/8
TS-450	18	089802	210	43.88	11.50	31.00	—	9.00	1	3.50	3.88	5.00	7.00	20.00	2	Drilled to order	Drilled to order	Drilled to order
TS-450	24	089803	240	49.88	11.50	37.00	—	9.00	1	3.50	3.88	5.00	7.00	20.00	2			
TS-450	36	089804	290	61.88	11.50	49.00	—	9.00	1	3.50	3.88	5.00	7.00	20.00	2			

Take-up frame bearings – inch

Telescoping (TS) tapered roller bearings

Type E

Shaft size	Frame size
1-3/16 to 1-1/4	TS-250
1-3/8 to 2-3/16	TS-300
1-1/2 to 2-3/16	TS-300
2-1/4 to 2-1/2	TS-350
2-11/16 to 3	TS-400
3-3/16 to 3-1/2	TS-400
3-15/16 to 5	TS-500

TAF

Shaft size	Frame size
2-7/16 to 2-1/2	TS-400
2-15/16 to 3	TS-400
3-7/16 to 4	TS-500
4-7/16 to 5	TS-500

Double Interlock, Type K

Shaft size	Frame size
1-1/2 to 2-3/16	TS-300
2-1/4 to 2-1/2	TS-350
2-11/16 to 3	TS-400
3-3/16 to 3-1/2	TS-500
3-15/16 to 4-1/2	TS-500
4-15/16 to 5	TS-500

Take-up frame bearings – inch

Telescoping (TS) spherical roller bearings

S-2000

Shaft size	Frame size
1-3/8 1-7/16 1-1/2	TS-250
2-11/16 1-3/4 1-15/16 2 2-3/16	TS-300
2-7/16	TS-350
2-11/16	TS-350
2-15/16 3	TS-350
3-7/16	TS-400
3-15/16 4-7/16	TS-500
4-15/16	TS-500

Safety Mount – IP

Shaft size	Frame size
1-1/8 to 1-1/2	TS-250
1-5/8 to 2-1/4	TS-300
2-3/8 to 2-1/2	TS-350
2-11/16 2-3/4 2-15/16 3	TS-350
3-3/16 3-1/4 3-7/16 3-1/2	TS-400
3-11/16 3-15/16 4 4-7/16 4-1/2	TS-500
4-15/16 5	TS-500

Unisphere II

Shaft size	Frame size
1-7/16 1-1/2 1-11/16 1-3/4	TS-250
1-15/16 2 2-3/16 2-7/16 2-1/2	TS-300
2-11/16 2-3/4 2-15/16 3	TS-350
3-7/16 3-1/2	TS-400
3-15/16 4	TS-400 or TS-500

S-2000 and Safety Mount - E-dimensioned

Shaft size	Frame size
1-3/16 to 1-1/4	TS-250
1-3/8 to 2-3/16	TS-300
2-1/4 to 2-1/2	TS-350
2-11/16 to 3	TS-400
3-3/16 to 3-1/2	TS-400
3-15/16 to 5	TS-500

Safety Mount ISAF, USAF 500, SAF-XT, SAFS

Shaft size	Frame size
1-15/16	TS-300 or TS-350
2-3/16	TS-400
2-7/16 to 3	TS-400
3-3/16	TS-500
3-7/16 to 3-1/2	TS-500
3-15/16 to 4-1/2	TS-500
4-15/16	TS-500

Take-up frame – inch

Bronzoil (BOTU)

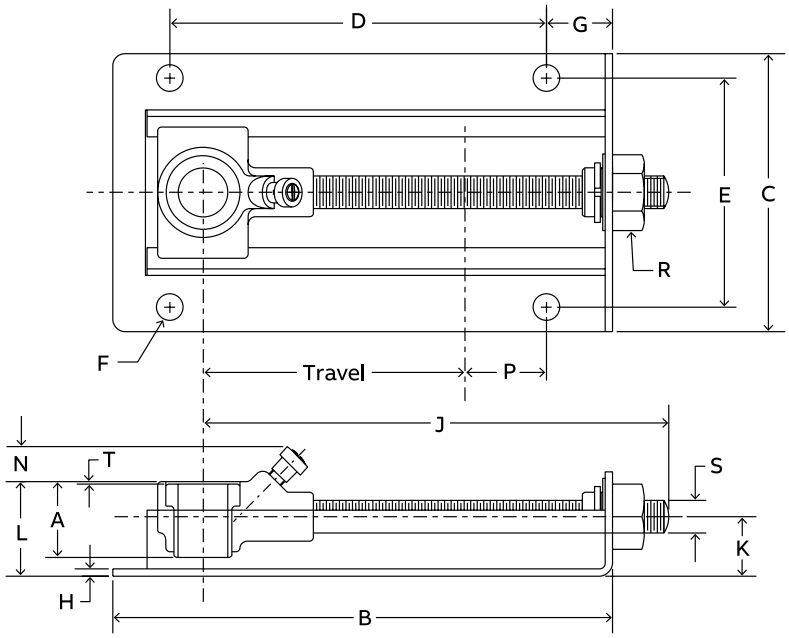

Shaft size X travel	Part number	Description	Weight	A	B	C	D	E
1/2 x 4	034020	BOTU-008X4	1.9					
5/8 x 4	034021	BOTU-010X4	1.8	1-3/16	7-5/8	4-1/4	5-3/4	3-1/2
3/4 x 4	034022	BOTU-012X4	1.7					
7/8 x 4	034023	BOTU-014X4	2.1					
15/16 x 4	034024	BOTU-015X4	2.0	1-9/16	7-5/8	4-1/4	5-3/4	3-1/2
1 x 4	034025	BOTU-100X4	1.9					

Shaft size X travel	F bolt dia.	G	H	J	K	L	N	P	R hex. size	S	T
1/2 x 4											
5/8 x 4	3/8	1	7/64	7-1/8	29/32	1-7/16	1/2	1-1/4	1	1/2	1/16
3/4 x 4											
7/8 x 4											
15/16 x 4	3/8	1	7/64	7-1/8	29/32	1-5/8	5/16	1-1/4	1	1/2	1/16
1 x 4											

Bronzoil take-up bearing assembly					
Size	(TUBO- - -) Assy. no.	1	2	3	4
1/2	034030	034001	405046	034013	444010
5/8	034031	034001	405046	034014	444010
3/4	034032	034001	405046	034015	444010
7/8	034033	034002	405046	034016	444010
15/18	034034	034002	405046	034017	444010
1	034035	034002	405046	034018	444010

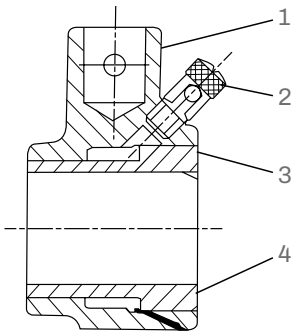

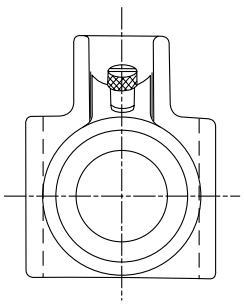

1 – Bronzoil housing

2 – Bronzoil take-up oil cup

3 – Bronzoil bushing

4 – Bronzoil permawick

IIoT technologies

OPTIFY™ solutions for complete powertrain condition monitoring

OPTIFY, our portfolio of Industrial Internet of Things (IIoT) solutions, allows you to easily monitor the overall health of your power transmission equipment and gain powerful insights—letting you know when maintenance is needed before it's too late.

Platform

Take the guesswork out of work with the free OPTIFY condition monitoring platform that empowers you with overall health indicators of your assets anytime, anywhere through its web portal or mobile app—providing you with a continuous flow of data for safe, hands-free gathering of measurements.



Intelli-Lube™

The premier automatic, connected lubricator that effortlessly extends the life of your bearings by replacing your manual lubrication process—streamlining maintenance, lowering costs, and improving safety with the right grease, volume, and interval every single time.

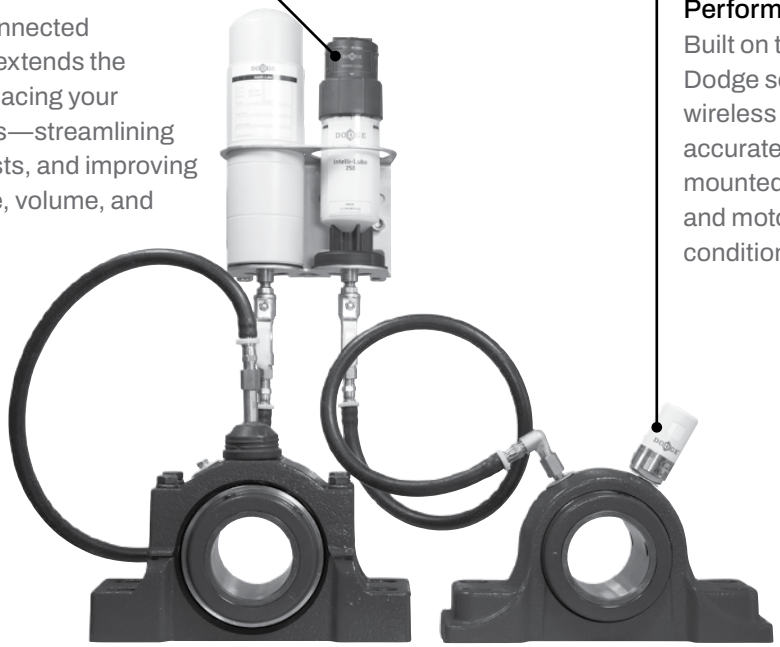

Performance Sensor

Built on the proven success of Dodge sensors, the specialized wireless sensor remotely captures accurate measurements in your mounted bearings, gear reducers, and motors for complete powertrain condition monitoring.

Notes



Dodge Industrial, Inc.
1061 Holland Road, Simpsonville, SC 29681
+1 864 297 4800

dodgeindustrial.com

Dodge Industrial, Inc. reserves all rights in this document and in the subject matter and illustrations contained therein. We reserve the right to modify contents without prior notice and do not accept responsibility for potential errors or possible lack of information in this document. Dodge Industrial, Inc. Terms and Conditions apply. Any reproduction, disclosure to third parties or utilization of its contents–in whole or in parts–is forbidden without prior written consent of Dodge Industrial, Inc.

© Copyright Dodge Industrial, Inc. All rights reserved. Specifications subject to change without notice.
An RBC Bearings company.

CA1GN02_09.25