VS-5001

SPEAKMAN®

Kubos™ Hand Held Shower

The multi-function Hand Held Shower shall have turbine impeller and four spray settings consisting of massage spray, satin spray, turbine spray, rain spray and pause setting.
The Hand Held Shower shall perform within 10% of stated GPM. The Hand Held Shower shall be certified with ASME A112.18.1/CSA B125.1 WaterSense and be listed with the California Energy Commission.

MODELS:

- VS-5001-E2: 2.0 GPM (7.6 L/min) flow rate
- VS-5001-E175: 1.75 GPM (6.6 L/min) flow rate
- VS-5001-E15: 1.5 GPM (5.7 L/min) flow rate



FEATURES:

- 344 spray outlets, 4 spray patterns and pause mode
- Exhilaration Spray Technology® includes patented Speakman Reaction high performance turbine engine
- 5 setting spray face includes Inner Massage, Satin Spray, Speakman Reaction, Rain, and Pause
- Spray adjusting faceplate, with optimum spray setting when in vertical position
- Plastic body construction
- 1/2" -14 NPS male inlet
- Includes coordinating shower bracket with 1/2" -14 NPT brass ball nut, female inlet, 1/2" - 14 NPS male outlet with check valve
- Includes 5' metal hose with (1) 1/2" -14 NPS female inlet and (1) 1/2"-14 NPS female outlet
- Corrosion resistant finishes
- Coordinates with Kubos Collection

STOCK FINISH:



PC BN MB

STANDARDS:

- ASME A112.18.1/CSA B125.1 certified
- WaterSense certified
- CEC (CA Energy Commission) certified, 1.75, 1.5 GPM only

WARRANTY:

Visit www.speakman.com for full product warranty information

- Limited Lifetime Warranty (residential)
- 1 Year Limited Warranty (commercial)

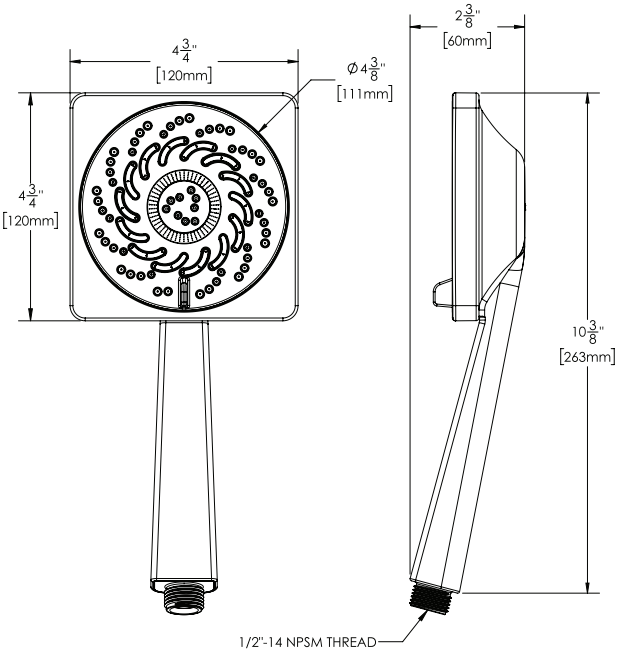

All dimensions are in inches (millimeters) unless otherwise specified and are subject to change without notice.

Architect/Engineer Approval Space:

P: 800-537-2107
F: 800-977-2747
W: WWW.SPEAKMAN.COM
R: 01-FEBRUARY 2019