INSTRUCTIONS FOR MODELS

SB-1004
SB-1004-E

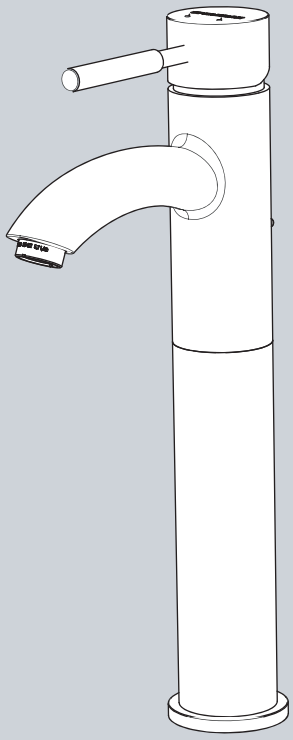

NEED HELP?

For additional assistance or service please contact:

SPEAKMAN® Company
400 Anchor Mill Road
New Castle, DE 19720

800-537-2107

customerservice@speakman.com

www.speakman.com

92-SB-1004-05

TOOLS AND SUPPLIES

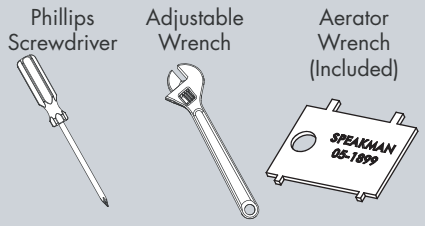

HELPFUL TOOLS & SUPPLIES:



IMPORTANT

- Do not over-tighten any connections or damage may occur.
- Be sure to read instructions thoroughly before beginning installation.
- This faucet has an operating range of 20-80 psi.

SAFETY TIPS

Cover your drain to prevent loss of parts. Be sure to wear eye protection while cutting pipe.

MAINTENANCE

Your new Speakman Product is designed for years of trouble-free performance. Keep it looking new by cleaning it periodically with a soft cloth. The use of harsh chemicals and abrasives may damage the finish and void the product warranty. Please be sure to only use approved cleaners. Please contact Speakman for any clarification of acceptable cleaners.

WARRANTY

Additional warranty information can be found at: www.speakman.com

1 Verify that the Vertical Extension (1) and Base Flange (2) are secured tightly to the Faucet Body.

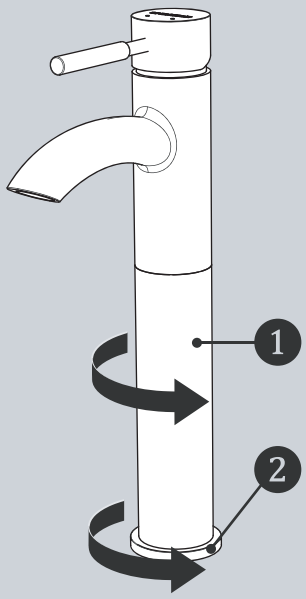

2 Insert Lift Rod through hole at rear of Faucet.

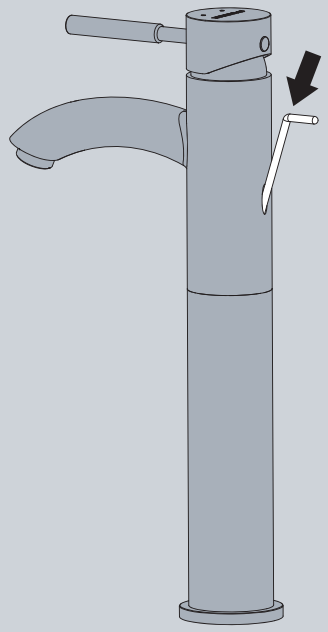

3 Thread Mounting Studs into base of Faucet. Tighten with Phillips Screwdriver.

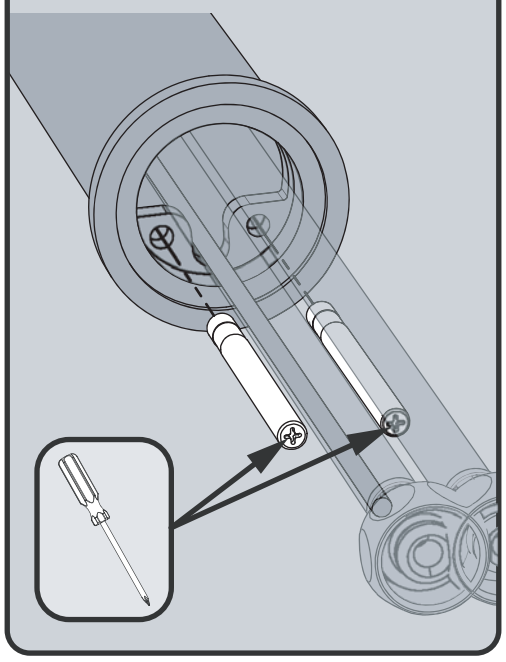

4 Place Rubber Gasket over Hoses and align to base of Faucet.

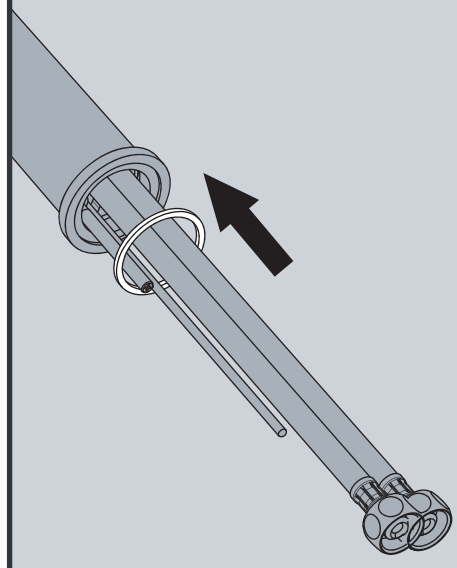

5 Place Hoses, one at a time, thru hole in mounting surface. Lower Faucet into position.

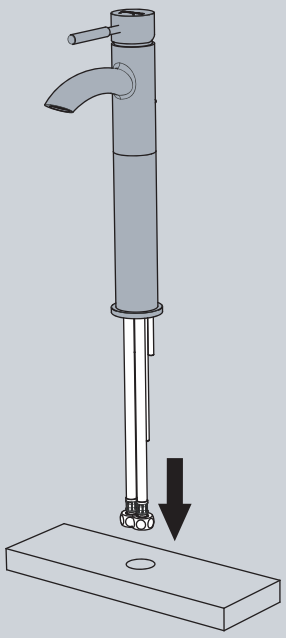

6 From below, install Rubber Washer (1), Metal Washer (2), and secure with Mounting Nuts (3). Align Faucet to desired position and wrench tighten Mounting Nuts (3).

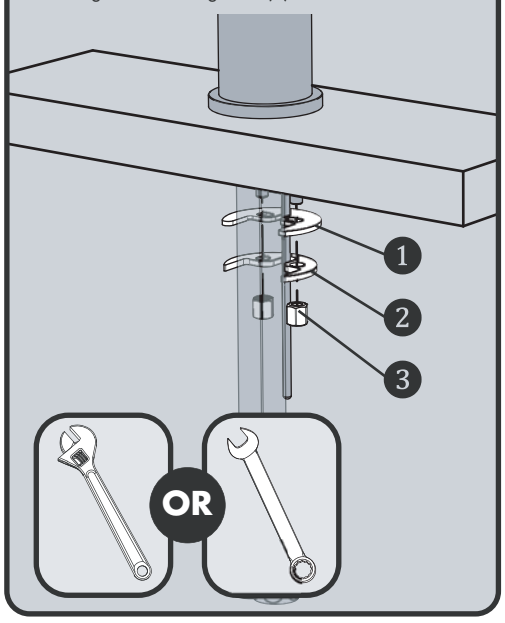

7 Make connections to water supplies. The inlet threads of the faucet are 9/16"-24 UNF and will accept a 3/8" Compression Fitting. Wrench Tighten.

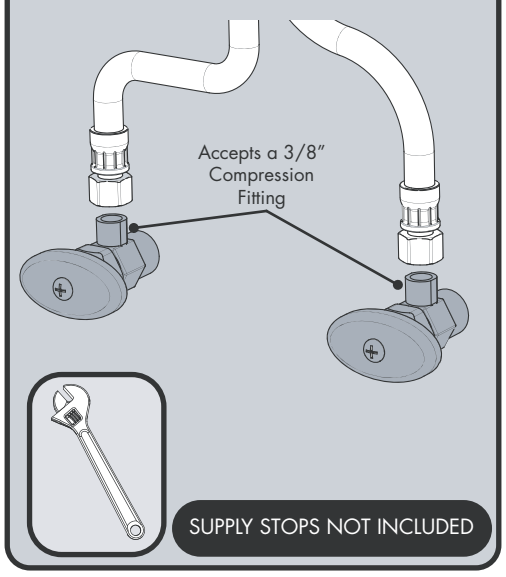

8 Remove Stopper (1), Flange Nut (2), and Flange Washer (3) from Drain Assembly.

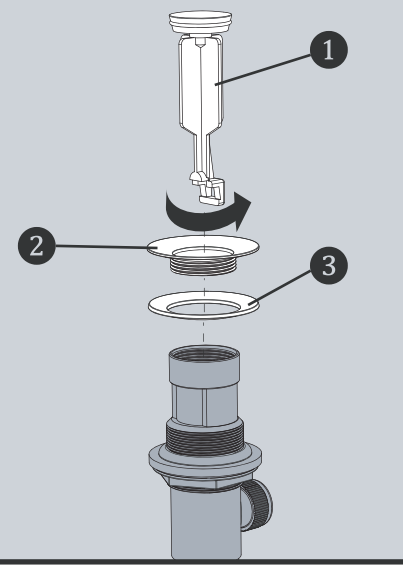

9 From beneath, insert Drain Assembly thru drain hole in sink. Attach supplied Flange Washer (1) or plumber's putty to the underside of the Flange (2). Secure Flange (2) to the Drain Assembly. Align the Drain Assembly as shown below.

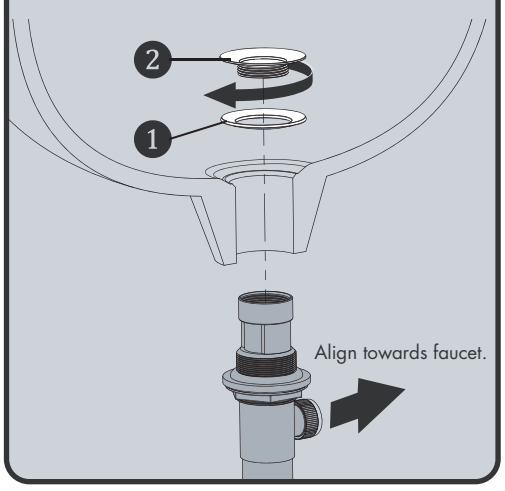

10 From beneath, secure Rubber Washer (1), Plastic Washer (2), and Mounting Nut (3). Wrench tighten.

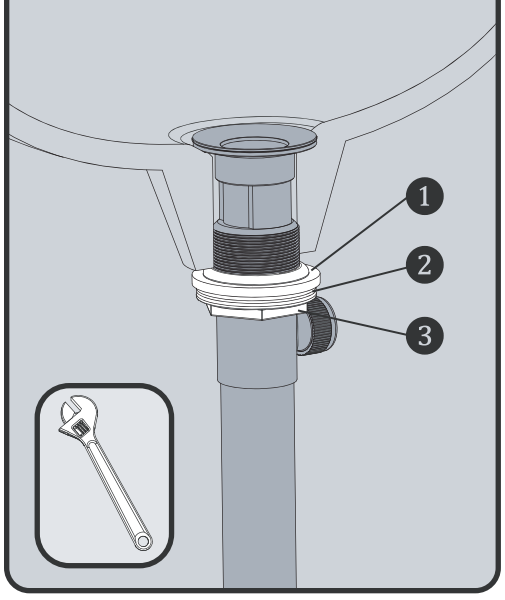

11 Remove Pivot Nut (1), from Drain Assembly. Install Outer Pivot Washer (2), and Pivot Rod (3). Ensure that Inner Pivot Washer (4) is retained in Drain Assembly. Insert Pivot Rod into Drain Assembly and install Stopper (6) as non-removable. Secure Pivot Rod to Drain Assembly by tightening Pivot Nut (1).

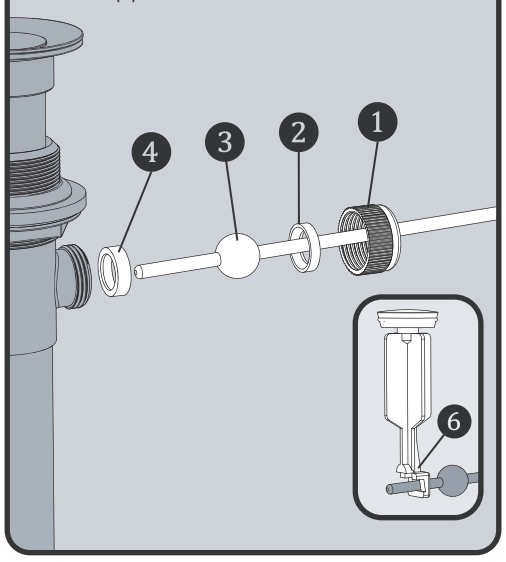

12 Place one end of Spring Clip (1), on Pivot Rod (2). Insert Pivot Rod (2) through a hole in the Lift Rod Strap (3). Secure with Spring Clip (1).

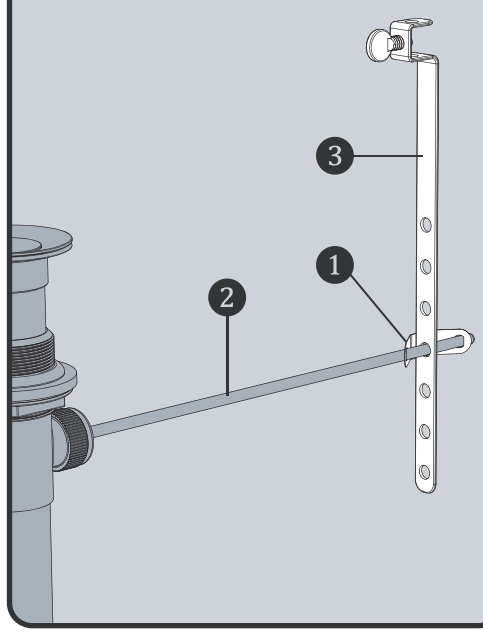

13 Place Drain into the open position by pressing downward on the Pivot Rod (1). Insert Lift Rod (2) into Strap (3). Adjust height of Lift Rod (2), and tighten Thumb Screw (4).

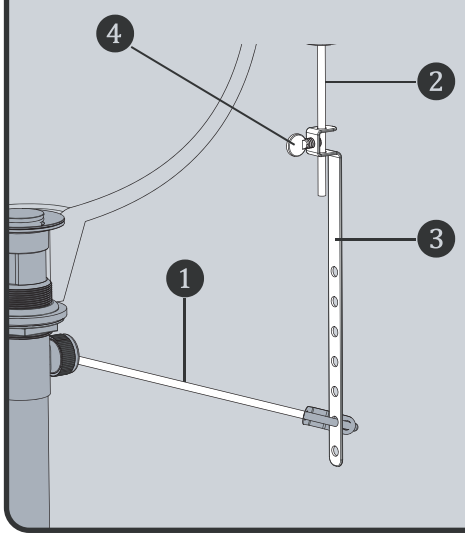

14 Turn on water supplies. Activate faucet and flush both HOT and COLD water for 1 minute.

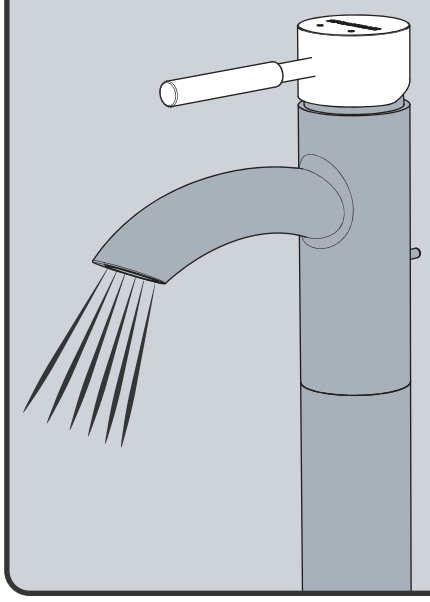

15 Turn OFF faucet and install Aerator with supplied Aerator Wrench.

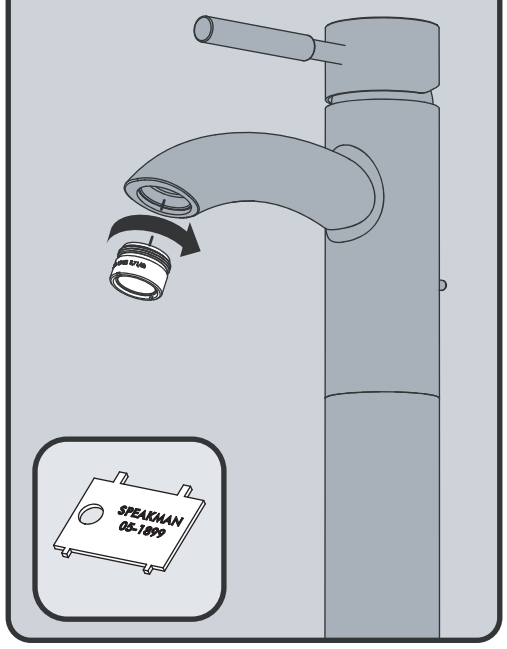

SB-1004 REPAIR PARTS

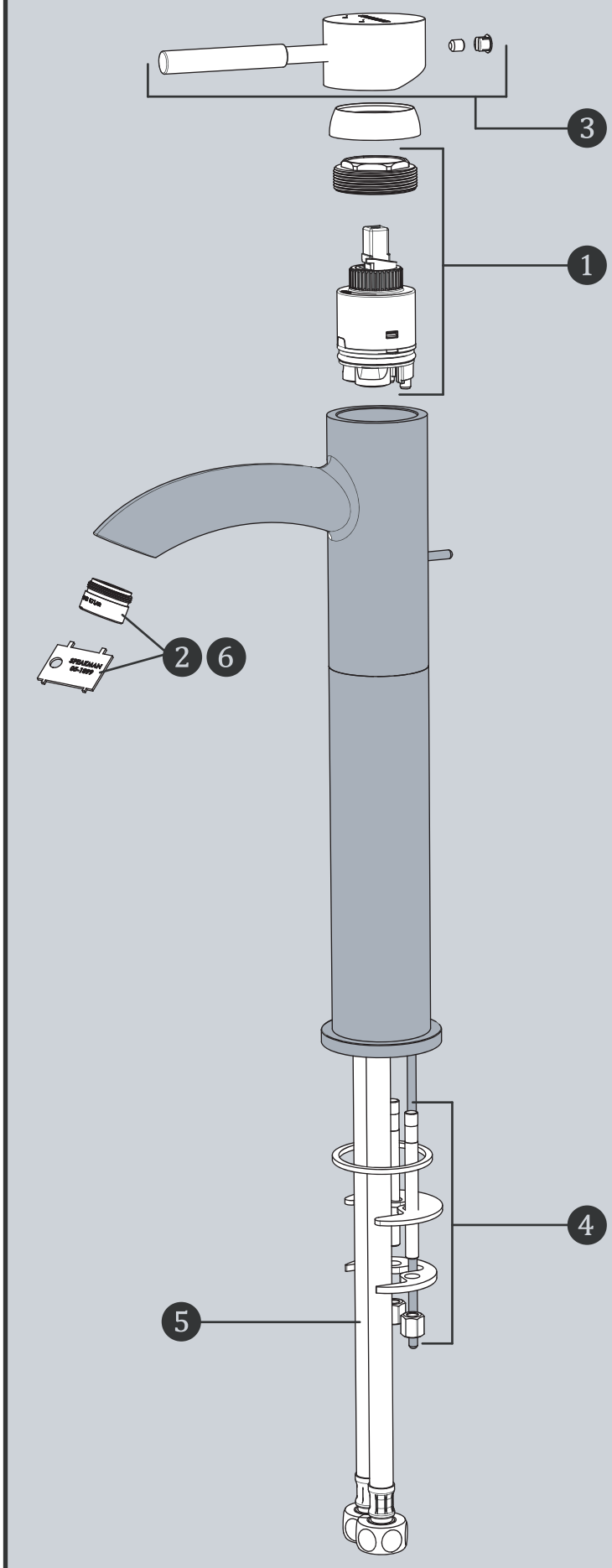

ITEM NO.	PART NO.	DESCRIPTION
1	RPG05-0986	CARTRIDGE AND RETAINING NUT
2	RPG05-0989	1.5 GPM VANDAL RESISTANT AERATOR ASSEMBLY
3	RPG04-0442	LEVER HANDLE, SCREW, AND INDEX
4	RPG05-0985	MOUNTING HARDWARE GROUP
5	RPG63-0099	24" LONG HOSES (2)
6	A-EA12	1.2 GPM VANDAL RESISTANT AERATOR ASSEMBLY

SB-1004 ROUGH-IN DIAGRAM

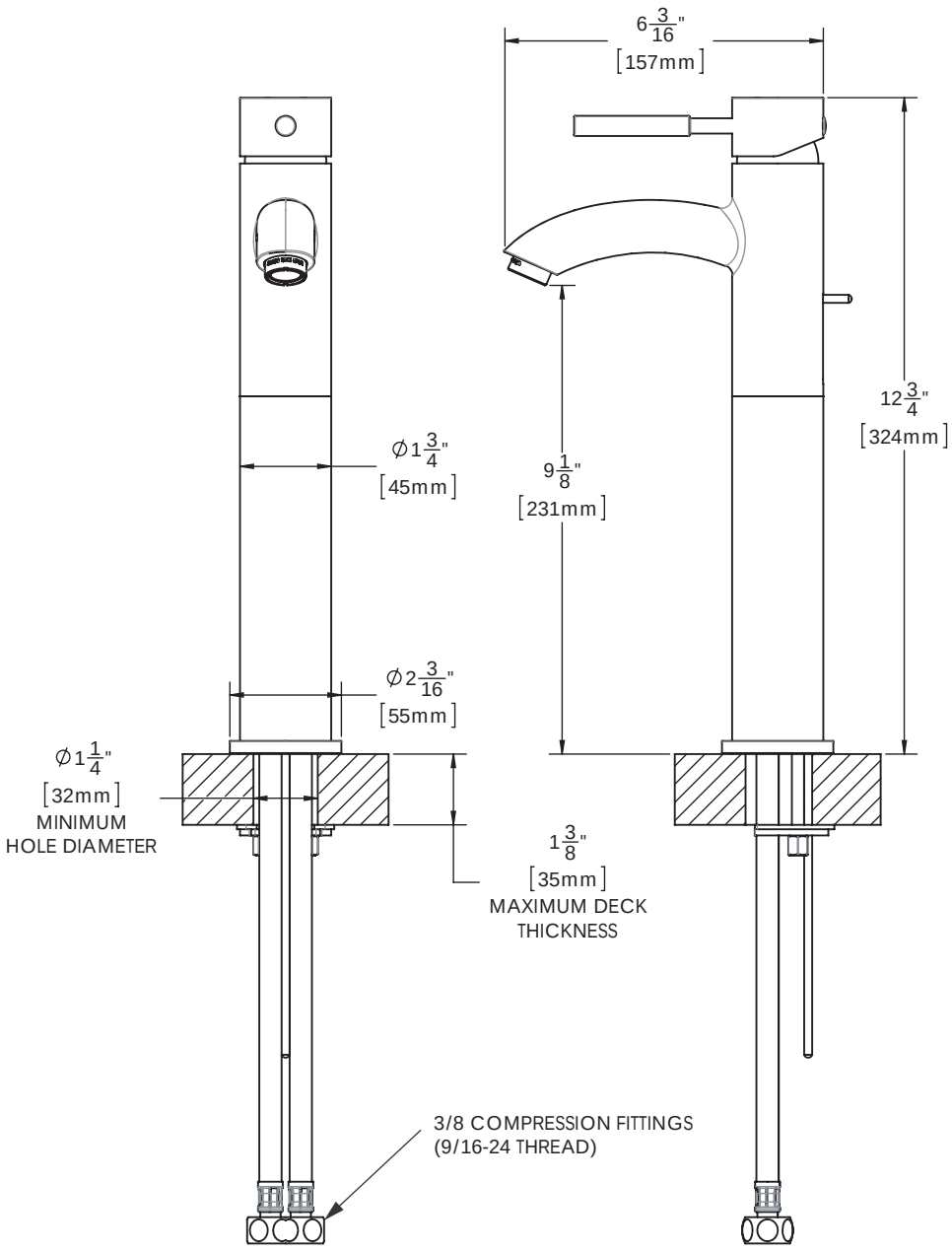

ALL DIMENSIONS ARE IN INCHES (MILLIMETERS) UNLESS OTHERWISE SPECIFIED. DIMENSIONS SUBJECT TO CHANGE WITHOUT NOTICE.