☐ **LV-105C** ☐ **LV-105SS**

MATCO NORCA

Single Handle Kitchen Faucet

Product Spec Sheet



Features & Benefits

- This Product Contains Less Than 0.25% Weighted Average Lead Content On Wetted Surfaces
- Metal Lever Handle
- Washerless Cartridge
- Max Flow Rate 1.5 GPM (5.7L/Min) At 60 PSI (ASME A112.18.1/A112.18.1)

LV-105C
Chrome Finish

LV-105SS
Stainless Steel Finish

Approvals:

Meets or Exceeds The Following:

* ANSI/ASME A112.18.1/A112.18.1
* NSF/ANSI 61 - Sec. 9
* NSF/ANSI 372
* IAPMO/cUPC
* CA AB1953
* ADA Compliant

TEL: *800-431-2082* ***FAX:*** *800-640-2252*

Visit Our Web Site : www.matco-norca.com

☐ **LV-105C** ☐ **LV-105SS**

Single Handle Kitchen Faucet

Product Spec Sheet

No.	Name	Part No.
1	Handle / *Llave*	RP13764*
2	Set screw / *Tornillo de fijación*	RP50226
3	Index / *Índice*	RP10048
4	Bonnet / *Bonete*	RP70371
5	Cap / *Tapa*	RP80756*
6	Cam / *Leva*	RP70107
7	Cam washer / *Arandela de leva*	RP70108
8	Mixer ball / *Bola de la mezcladora*	RP22007
9	Seat & Spring / *Base y resorte*	RP22008
10	O-ring / *A rotórico*	RP60138
11	Washer / *Arandela*	RP70832
12	Aerator / *Aireador*	RP30067*
13	Gasket / *Junta*	RP70330
14	Mounting nut / *Tuerca de montaje*	RP56019
15	Coupling nut / *Tuerca de acoplamiento*	RP56002

* Specify Finish
* Especifique el Acabado

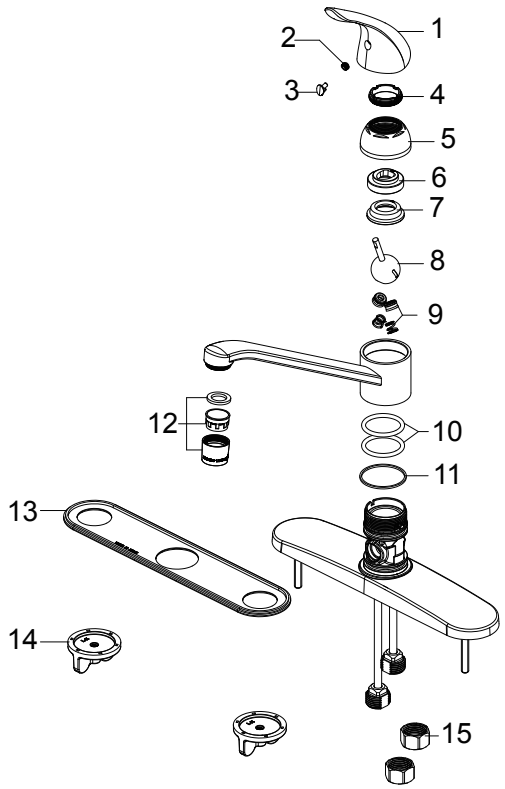

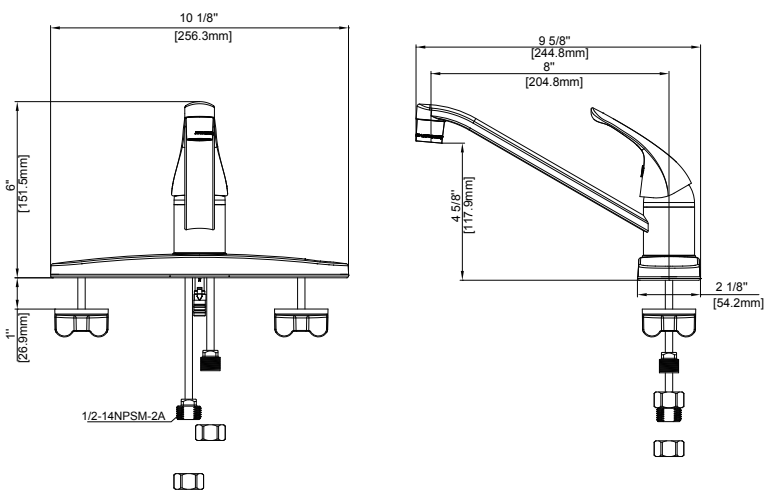

TEL: 800-431-2082 ***FAX: 800-640-2252***

Visit Our Web Site : www.matco-norca.com