SUBMITTAL DATA SHEET

NL Ball Style Meter Stop – 74602B-33

-33 PEP Compression x Meter



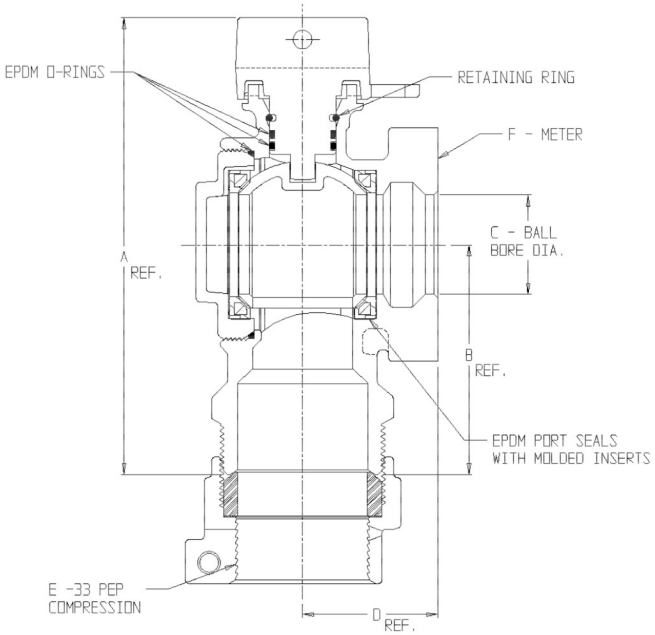

MODEL	SIZE	A	B	C	D	E	F
74602B-33	1 1/2	6.79	3.40	1.50	2.03	1 1/2	1 1/2
74602B-33	2	7.46	3.75	2.00	2.84	2	1 1/2 OR 2

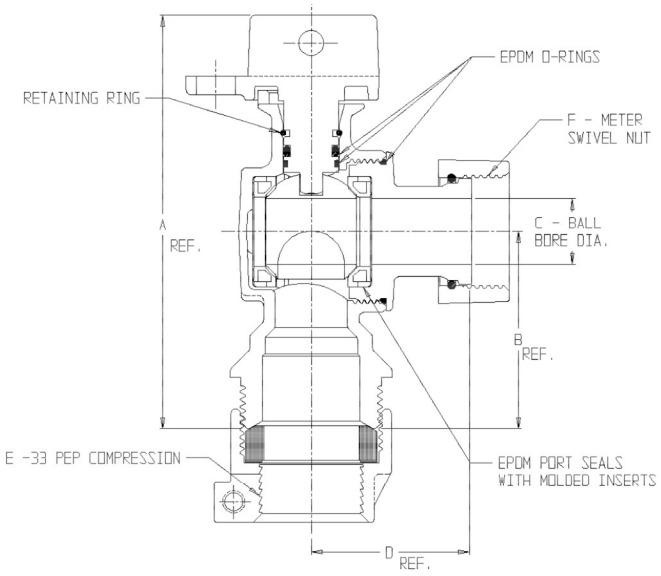

MODEL	SIZE	A	B	C	D	E	F
74602B-33	3/4	4.63	2.21	.75	1.78	3/4	5/8 X 3/4, 3/4
74602B-33	1 X 3/4 X 3/4	4.96	2.55	.75	1.78	1	5/8 X 3/4, 3/4
74602B-33	1	5.14	2.50	1.00	2.46	1	1

SUBMITTAL INFORMATION

- Manufactured in compliance with ANSI/AWWA C800 (latest revision)
- Brass components in contact with potable water conform to ASTM B584, UNS C89833 (latest revision) and identified with “NL”
- Certified to NSF/ANSI 61 and NSF/ANSI 372
- Brass components not in contact with potable water conform to ASTM B62 and ASTM B584, UNS C83600 -85-5-5-5 (latest revision)
- PTFE coated brass ball
- Valve rated for 300 PSIG water pressure, end connections not to exceed rated pipe pressure.
- Blow out proof EPDM port seals
- End piece joint sealed with an EPDM o-ring and thread locker
- Insert stiffeners required on all flexible plastic connections

A.Y. McDonald Mfg. Co.
4800 Chavenelle Rd
Dubuque, IA 52002

Toll Free: 1-800-292-2737
sales@aymcdonald.com
aymcdonald.com

A.Y. McDonald considers the information on this assembly drawing correct when published. Item and option availability, including specifications, are subject to change without notice.

Submitted by: