

ADJUST TO DESIRED HEIGHT.
(Fig. 1)

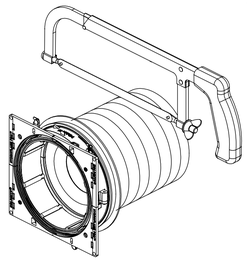

CUT INNER & OUTER SLEEVE.
(AS NEEDED)
(CAN BE CUT AS SHORT AS 4-1/2")
(Fig. 2)

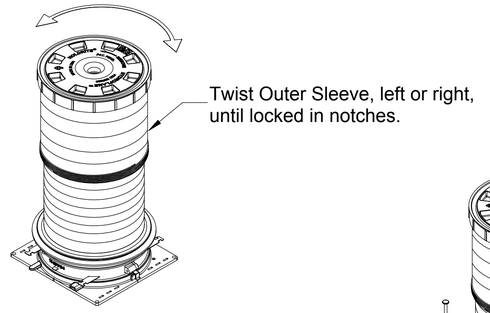

LOCK OUTER SLEEVE IN PLACE.
(Fig. 3)

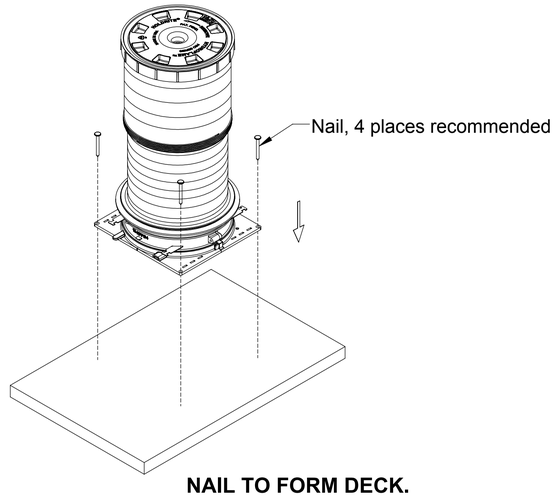

NAIL TO FORM DECK.
(Fig. 4)

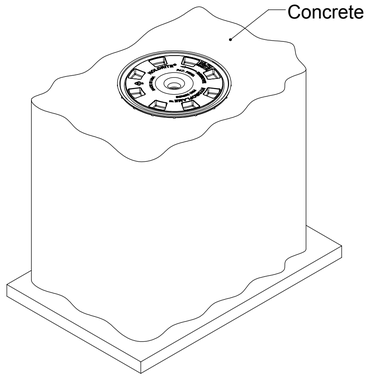

POUR CONCRETE.
(Fig. 5)

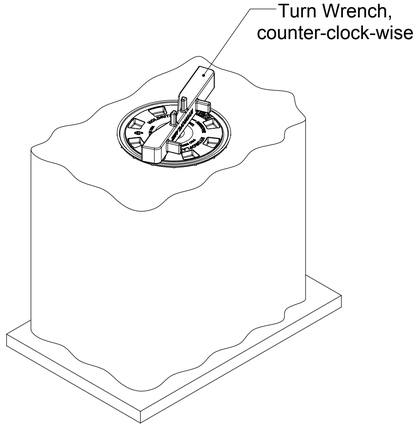

REMOVE SAFETY CAP WITH HF WRENCH,
OR BREAK-OUT WITH HAMMER.
(Fig. 6)

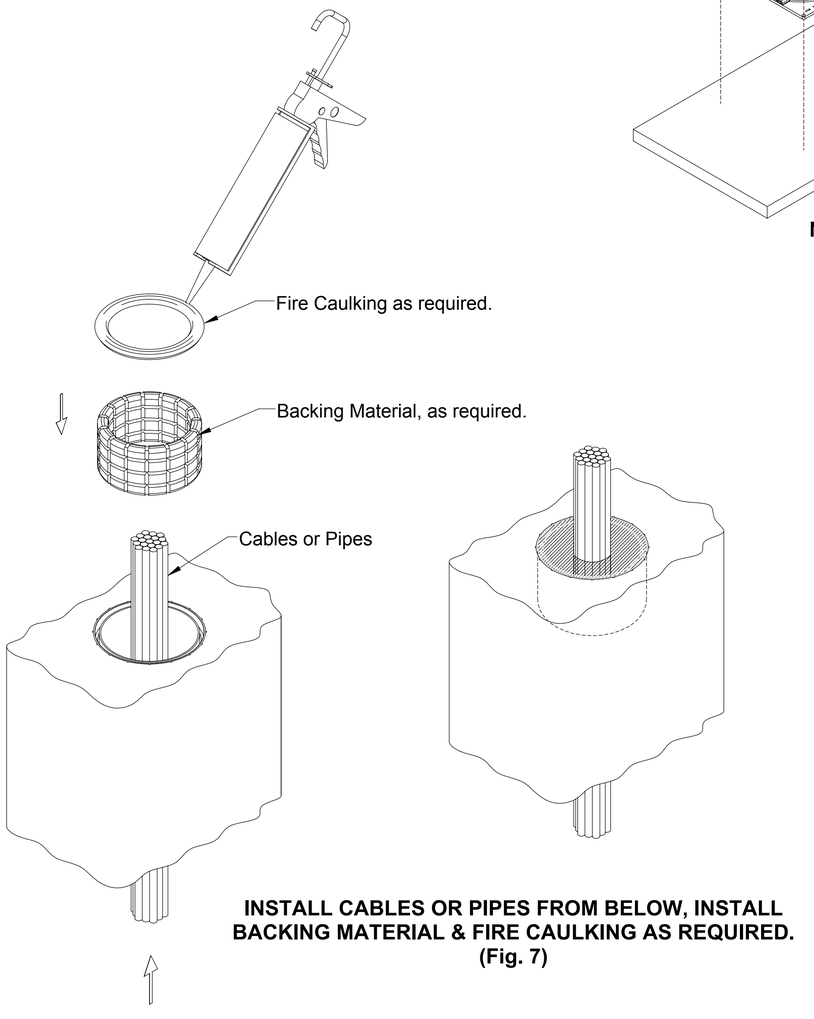

INSTALL CABLES OR PIPES FROM BELOW, INSTALL
BACKING MATERIAL & FIRE CAULKING AS REQUIRED.
(Fig. 7)

Hydroflame PRO Series - Cable / Line-Set Sleeve. See Hydroflame Pro - "Best Practices" document and UL's online certification directory (file R25101) for more details. Rev A