PRODUCT SPECIFICATIONS

Elkay Avado Single Lever Filtered Beverage Faucet. Faucet is made of Brass material, with a Ceramic Disc valve. Faucet requires 1 faucet holes.

Mounting Type:	Deck Mount
Special Features:	Filtered
Finish:	Chrome (CR), Lustrous Steel (LS), Matte Black (MB)
Handle Type:	Lever Handle
Deck Clearance:	9-5/16"
Spout Reach:	6"
Spout Height:	12-15/16"
Hole Drillings:	1
Material:	Brass
Valve Type:	Ceramic Disc
Valve Connection:	1/2"-14 NPSM
Flow Rate:	
Faucet Hole Size (min):	1-1/2"
Countertop Thickness:	2-1/2
Spout Swing Rotation:	360°
Spout Type:	Gooseneck





Included with Product: **Faucet with Filter ERF750**

A Century of Tradition and Quality.
For more than 100 years, Elkay has been making innovative products and providing exceptional customer care. We take pride in offering plumbing products that make life easier, inspire change and leave the world a better place.

Product Compliance: ADA & ICC A117.1
ASME A112.18.1/CSA B125.1
NSF 61 (Q≤1)
NSF 372 (lead free)

Accessory: NSF 42
NSF 53

Complies with ADA & ICC A117.1 accessibility requirements when installed according to the requirements outlined in these standards.

Clean and Care Manual (PDF)
Installation Instructions (PDF) - 2000000477
Warranty (PDF)

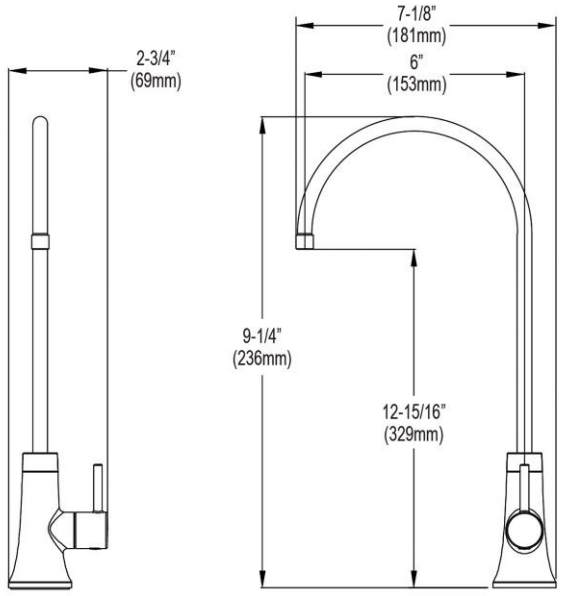

PART:_____QTY: _____
PROJECT:_____
CONTACT:_____
DATE:_____
NOTES:_____
APPROVAL:_____

In keeping with our policy of continuing product improvement, Elkay reserves the right to change product specifications without notice. Please visit elkay.com for the most current version of Elkay product specification sheets. This specification describes an Elkay product with design, quality, and functional benefits to the user. When making a comparison of other producers' offerings, be certain these features are not overlooked.

Included Accessories		
ERF750	Elkay 750-gallon Residential Replacement Filter Spec Sheet (PDF)	

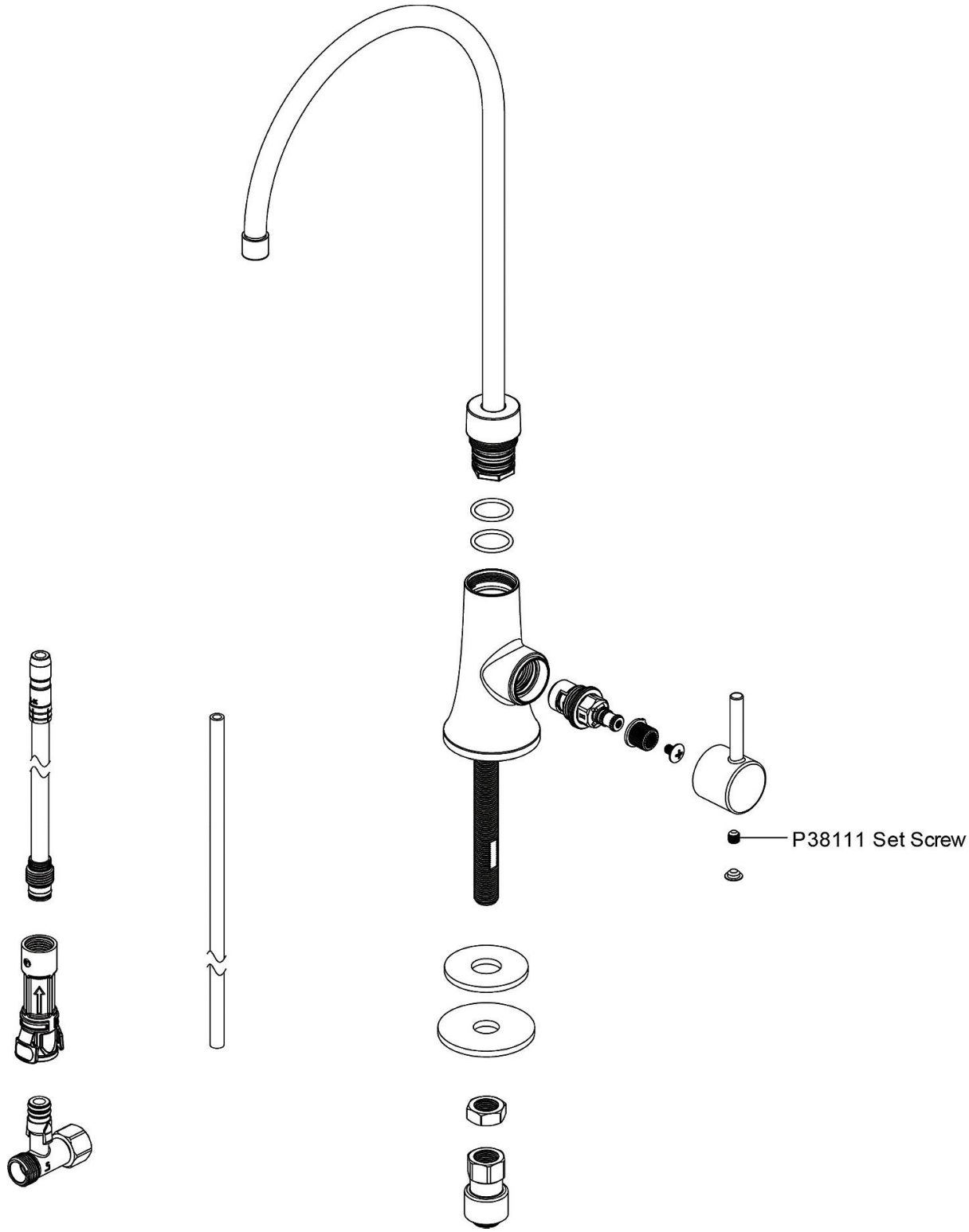

In keeping with our policy of continuing product improvement, Elkay reserves the right to change product specifications without notice. Please visit elkay.com for the most current version of Elkay product specification sheets. This specification describes an Elkay product with design, quality, and functional benefits to the user. When making a comparison of other producers' offerings, be certain these features are not overlooked.