VACUFORCE®

VACUUM CUPS



CUP INDEX



VFB Series
- Single bellows suction cup
- 5mm-150mm Diameter
- Black nitrile rubber (NBR)
- Red silicone rubber
- White silicone rubber
- Push on / Pull off fittings

1.05



B1.5 Series
- Single bellows suction cup
- 11mm-53mm Diameter
- Black nitrile rubber (NBR)
- White silicone rubber
- Push on / Pull off fittings

1.17



PGJ Series
- Single bellows suction cup
- 6mm-50mm Diameter
- Black nitrile rubber (NBR)
- White silicone rubber

1.27



B2.5 Series
- Single bellows suction cup
- 5mm-60mm Diameter
- Black nitrile rubber (NBR)
- White silicone rubber
- Push on / Pull off fittings

1.38



VFDB Series
- 2.5 bellows suction cup
- 20mm-70mm Diameter
- Single Durmoeter PU
- Double Durometer PU
- Push on / Pull off fittings

1.49



VFBL Series
- 4.5 bellows suction cup
- 5mm-50mm Diameter
- Black nitrile rubber (NBR)
- Red silicone rubber
- White silicone rubber
- Push on / Pull off fittings

1.56



SBLP Series
- 4.5 bellows suction cup
- 30, 40, 50mm Diameter
- Red silicone rubber
- Push on / Pull off fittings

1.61



STC Series
- Single bellows suction cup
- 22mm-125mm Diameter
- 45 Durometer rubber
- 60 Durometer rubber
- Vulcanized fittings

1.65



SBF Series
- Single bellows suction cup
- 30mm-100mm Diameter
- 70 Durometer rubber
- Vulcanized fittings

1.74



SOB Series
- Single bellows oval cup
- 45 Durometer rubber
- 60 Durometer rubber
- Vulcanized fittings

1.81



VFF Series
- Flat cleated suction cup
- 15mm-150mm Diameter
- Black nitrile rubber (NBR)
- Red silicone rubber
- White silicone rubber
- Push on / Pull off fittings

1.88



PFG Series
- Flat cleated suction cup
- 15mm-150mm Diameter
- Black nitrile rubber (NBR)
- Red silicone rubber
- White silicone rubber
- Push on / Pull off fittings

1.98

CUP INDEX



STP Series 1.92
- Flat cleated suction cup
- 30mm & 60mm Diameter
- Ultra thin pick up lip
- Silicone rubber
- Push on / Pull off fittings



SFF Series 1.101
- Flat cleated suction cup
- 30mm-125mm Diameter
- 45 Durometer rubber
- 60 Durometer rubber
- Vulcanized fittings



SOF Series 1.102
- Flat oval suction cup
- 30mm & 60mm Diameter
- 45 Durometer rubber
- 60 Durometer rubber
- Vulcanized fittings



SOP & SNP Series 1.118
- Foam rubber vacuum cups
- Round and rectangular models
- Up to 220mm Diameter



Cup Fittings



Level Compensators

VACUUM CUP MATERIALS

There are various reasons for choosing a particular vacuum cup material. The first choice is normally the hardness. This will determine the ability of a vacuum cup to seal against the surface of the product being handled. The most commonly used hardness measurement scale is Shore Hardness, often referred to as Durometer. In fact, a durometer is the actual instrument used to measure hardness but is often referred to as the measuring unit throughout industry.

There are different hardness scales based on the materials being measured, such as plastics or rubbers or metals. The scale used to identify the hardness of vacuum cup materials is Durometer Scale A, which ranges from 100 (hard) to 5 (soft). Vacuum cups are typically available in compounds with a hardness between 35 to 70 Durometer.

Another, sometimes very important characteristic of a vacuum cup material, is the temperature resistance. Most pick-and-place applications occur at "room temperature", but in the plastic injection industry for example, part temperature is often considered in vacuum cup choice due to the high temperature of parts being removed from the mold tool. At the other end of the scale is the handling of cold products, such as refrigerated or frozen food packaging. Typical vacuum cup materials have a temperature range from -40°C to 204°C (-40°F to +400°F).

NBR (Vacuforce code suffix N) is the most common material and is the same as **Nitrile rubber and Buna-N**. NBR is used in general industrial applications and is found in steel handling, plastics handling, and any other application where the cup should be resistant to oils and related chemicals. In most applications, this is the "go-to" material choice based on its fair cost and good wear resistance. The hardness of this compound is typically 60 durometer, although this can be as low as 40 or as high as 70. NBR is often overlooked for high temperature applications such as injection molding as the user specifies a very high temperature and therefore opts for silicone. NBR is suitable for most plastic injection parts handling as its temperature rating is often in excess of 90°C/200°F.

SILICONE (Vacuforce code suffix S & ST) is a very popular cup compound found in many applications. Silicone offers the advantage of having extreme temperature resistance both cold and hot, ideal for handling frozen packaged food and hot plastic-injected molded parts with a temperature range from -40°C (-40°F) to 204°C (400°F). Silicone is softer than NBR, having a typical Durometer rating of 40, allowing it to seal against contoured or rough surfaces, such as cardboard sheet, corrugated plastic, and plastic food packaging. Vacuforce silicone is offered as standard with FDA (title 21) compliance to allow direct contact with food and drug products.
Vacuforce Code S - Red Silicone, Vacuforce Code ST - White Translucent.

METAL IMPREGNATED SILICONE (Vacuforce code SMI & STMI) has the same basic characteristics as the standard silicone described above, but the metal impregnated compound has been design specifically for the food industry. Iron filings inside the actual silicone compound allow metal detectors to sense that a vacuum cup has fallen into the food packaging that contains food stuffs like bread loaves, rolls, and buns or confectionery foodstuffs. Vacuforce Code SMI - Red Silicone, Code STMI - White Translucent.

An important note about silicone that must be understood by the vacuum cup user. Silicone should never be used on surfaces which are to be painted, such as automotive body panels, as the paint will not bond properly on the area touched by the silicone compound cup. Also, it should not be used to handle decorative stone such as marble or quartz, or glass products as it will permanently etch the surface.

In the pneumatics and vacuum industry there are 4 types of popular thread forms in use today. This page highlights the technical data of each which should be understood when applying vacuum cup fittings shown in this catalogue to applications found in the field.

National Pipe Taper (NPT)

Referred to as NPT, this American pipe thread is by far the most common thread used in American made fluid power components and is the standard thread in the USA and Canada. This tapered thread seals using a thread sealant or tape. The Pneuforce NPT male threaded fittings have a pre-applied thread sealant to allow speed of connection to female threaded ports.

Thread Taper Angle	1° 47'
Thread Angle	60°
Thread Crest & Root	Flat

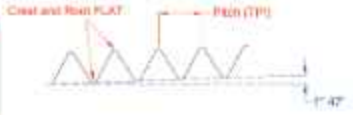

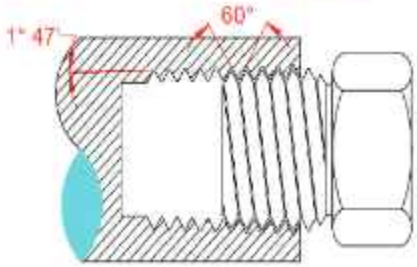

National Pipe Straight (NPS)

Often referred to as NPSF, the NPS thread has the same fundamental characteristics as NPT except that it is a straight thread. NPSF stands for National Pipe Straight Fuel and is often used in female threads for fuel line connections or in the pneumatics industry it is often found in plastic body parts where a tapered thread could split the component body as the fitting is tightened.

Thread Taper Angle	0°
Thread Angle	60°
Thread Crest & Root	Flat

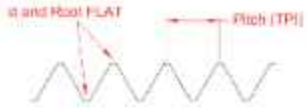

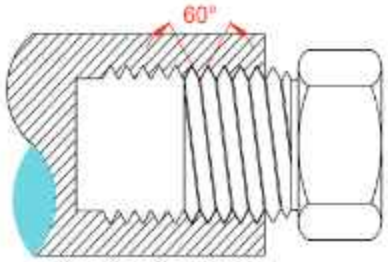

	1/8NPT	1/4NPT	3/8NPT	1/2NPT
TPI	27	18	18	14
Major Ø (mm)	10.3	13.7	17.1	21.3
Pitch (mm)	0.94	1.41	1.41	1.81

British Standard Pipe Taper (BSPT)

Sometimes referred to as an "R" thread, the BSP Thread (British Standard Pipe) is used throughout the world as a pipe thread except for the USA which uses NPT. BSPT is a tapered thread and is used in male threaded components to connect to female BSPT and also BSPP thread forms. Of course using a BSPT male to BSPT female is the preferred method which offers a full tapered seal, BSPT threads need a thread sealant to seal. However, Pneuforce BSPT male threads have a pre-applied thread sealant and do not require additional thread tape.

Thread Taper Angle	1° 47'
Thread Angle	55°
Thread Crest & Root	Radius

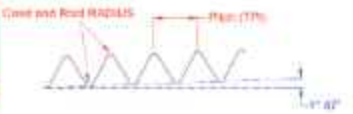

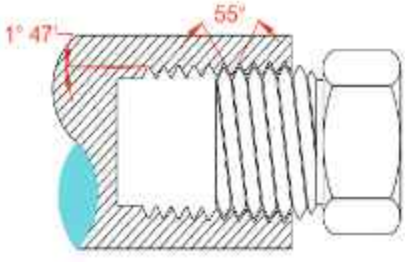

British Standard Pipe Parallel (BSPP)

Often referred to as a G thread, the BSPP thread form is by far the most popular female thread for pneumatic components throughout the world except for the USA where NPT is the standard. A parallel thread, the male fittings seal with an O ring ensuring a perfect seal each time and also in multiple connections such as a manifold, ensure common fitting height. A further advantage is that the male fitting can be used repeatedly without the need for reapplying thread sealant. Male G threads cannot be connected to female BSPT thread ports.

Thread Taper Angle	0°
Thread Angle	55°
Thread Crest & Root	Radius



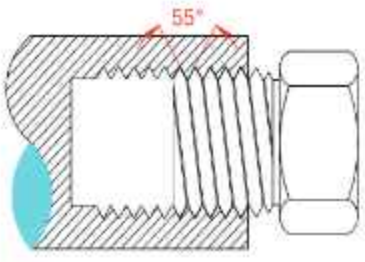

	1/8BSP	1/4BSP	3/8BSP	1/2BSP
TPI	28	19	19	14
Major Ø (mm)	9.7	13.2	16.6	20.9
Pitch (mm)	0.91	1.34	1.34	1.81

VFB SINGLE BELLOWS CUP

- Single bellows design
- Compensates for height variances in part picking
- Can seal on convex and concave surfaces
- Available from 5mm to 150mm diameter
- NBR, FDA Silicone and metal detectable materials



VFB | **20** | **N**

Series

Model	Diameter
5	5
8	8
10-2	11
15-2	16
20	22
30-2	34
40	43
50-2	53
75	78
110	115
150	155

Cup Material	
N	Nitrile
S	Red Silicone
ST	White Translucent Silicone
SMI	Metal Impregnated Red Silicone
STMI	Metal Impregnated White Translucent Silicone

Part number example VFB30-2SMI
34mm diameter single bellows vacuum cup in red metal impregnated silicone



This cup series is available in metal detectable FDA compliant silicone.

For red colored metal detectable silicone use material code SMI.

For white translucent metal detectable silicone use material code STMI.



VFB5 SINGLE BELLOWS CUP

- 5mm Diameter (0.196") single bellows design
- Compensates for height variances in part picking
- Can seal on convex and concave surfaces
- NBR, FDA compliant Red and White Silicone, non conductive silicone





APPLICATIONS

- Small part pick and place
- Injection molding
- Labeling machinery
- Electronics parts pick and place
- Direct food contact pick and place

VFB	5	N
Series	Model / Diameter	Cup Material

Model	Diameter
5	5

Cup Material	
N	Nitrile NBR
S	Red Silicone
ST	White Translucent Silicone
SMI	Metal Impregnated Red Silicone
STMI	Metal Impregnated White Translucent Silicone

Cup Fittings	
Use Fitting Type	A



For cup material data please refer to vacuforce.com/materials

Part number example VFB5S
5mm diameter single bellows vacuum cup in red silicone

DIMENSIONS (mm)

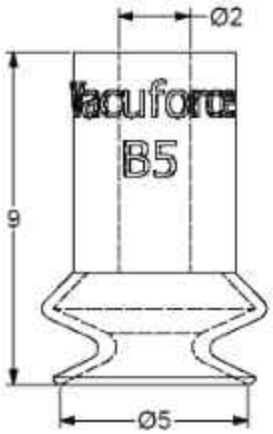

Working Parameters	
Compressed Height	7.5mm (bellow compresses by 1.5mm)
Sealing Radius min	1.5mm (or 3mm diameter object)

VFB8 SINGLE BELLOWS CUP

- 8mm Diameter (0.315") single bellows design
- Compensates for height variances in part picking
- Can seal on convex and concave surfaces
- NBR, FDA compliant Red and White Silicone, non conductive silicone





APPLICATIONS

- Small part pick and place
- Injection molding
- Labeling machinery
- Electronics parts pick and place
- Direct food contact pick and place

DIMENSIONS (mm)

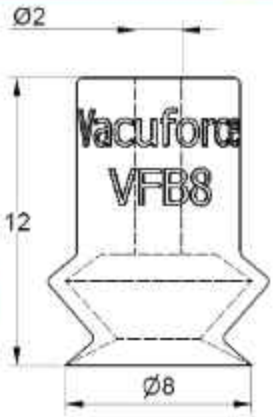

Working Parameters	
Compressed Height	8.5mm (bellow compresses by 3.5mm)
Sealing Radius min	1.9mm (or 3.8mm diameter object)

VFB | **8** | **N**

Series	Model	Diameter
	8	8

Cup Material	
N	Nitrile NBR
S	Red Silicone
ST	White Translucent Silicone
SMI	Metal Impregnated Red Silicone
STMI	Metal Impregnated White Translucent Silicone

Cup Fittings	
Use Fitting Type	A



For cup material data please refer to vacuforce.com/materials

Part number example VFB8S
8mm diameter single bellows vacuum cup in red silicone

VFB10-2 SINGLE BELLOWS CUP

- 11mm Diameter (0.433") single bellows design
- Compensates for height variances in part picking
- Can seal on convex and concave surfaces
- NBR, FDA compliant Red and White Silicone, non conductive silicone





APPLICATIONS

- Small part pick and place
- Injection molding
- Labeling machinery
- Electronics parts pick and place
- Direct food contact pick and place

DIMENSIONS (mm)



Working Parameters	
Compressed Height	12.5mm (bellow compresses by 4.5mm)
Sealing Radius min	4mm (or 8mm diameter object)

VFB — Series

10-2

Model	Diameter
10-2	11

N

Cup Material	
N	Nitrile NBR
S	Red Silicone
ST	White Translucent Silicone
SMI	Metal Impregnated Red Silicone
STMI	Metal Impregnated White Translucent Silicone

Cup Fittings	
Use Fitting Type	B



For cup material data please refer to vacuforce.com/materials

Part number example VFB10-2S
11mm diameter single bellows vacuum cup in red silicone

VFB15-2 SINGLE BELLOWS CUP

- 16mm Diameter (0.630") single bellows design
- Compensates for height variances in part picking
- Can seal on convex and concave surfaces
- NBR, FDA compliant Red and White Silicone, non conductive silicone





APPLICATIONS

- Small part pick and place
- Injection molding
- Labeling machinery
- Electronics parts pick and place
- Direct food contact pick and place

DIMENSIONS (mm)

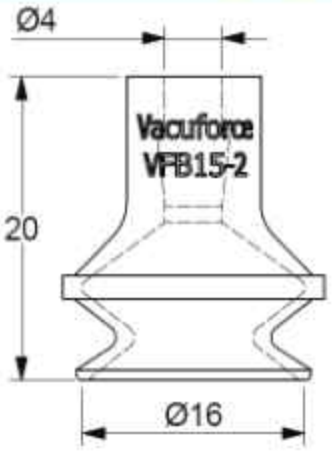

Working Parameters	
Compressed Height	13.5mm (bellow compresses by 6.5mm)
Sealing Radius min	5mm (or 10mm diameter object)

VFB | **15-2** | **N**

Series	Model	Diameter
	15-2	16

Cup Material	
N	Nitrile NBR
S	Red Silicone
ST	White Translucent Silicone
SMI	Metal Impregnated Red Silicone
STMI	Metal Impregnated White Translucent Silicone

Cup Fittings	
Use Fitting Type	B



For cup material data please refer to vacuforce.com/materials

Part number example VFB15-2S
16mm diameter single bellows vacuum cup in red silicone

VFB20 SINGLE BELLOWS CUP

- 22mm Diameter (0.866") single bellows design
- Compensates for height variances in part picking
- Can seal on convex and concave surfaces
- NBR, FDA compliant Red and White Silicone, non conductive silicone





APPLICATIONS

- Small part pick and place
- Injection molding
- Labeling machinery
- Electronics parts pick and place
- Direct food contact pick and place

DIMENSIONS (mm)

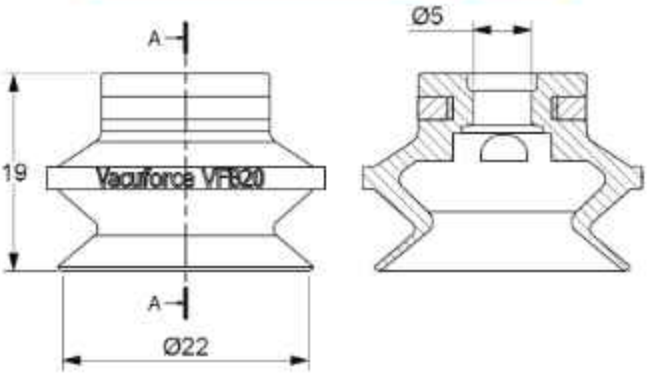

Working Parameters	
Compressed Height	9mm (bellow compresses by 10mm)
Sealing Radius min	10mm (or 20mm diameter object)

VFB	20		N
Series	Model	Diameter	
	20	22	

Cup Material	
N	Nitrile NBR
S	Red Silicone
ST	White Translucent Silicone
SMI	Metal Impregnated Red Silicone
STMI	Metal Impregnated White Translucent Silicone

Cup Fittings	
Use Fitting Type	C



For cup material data please refer to vacuforce.com/materials

Part number example VFB20S
22mm diameter single bellows vacuum cup in red silicone

VFB30-2 SINGLE BELLOWS CUP

- 34mm Diameter (1.338") single bellows design
- Compensates for height variances in part picking
- Can seal on convex and concave surfaces
- NBR, FDA compliant Red and White Silicone, non conductive silicone







APPLICATIONS

- Small part pick and place
- Injection molding
- Labeling machinery
- Electronics parts pick and place
- Direct food contact pick and place

DIMENSIONS (mm)

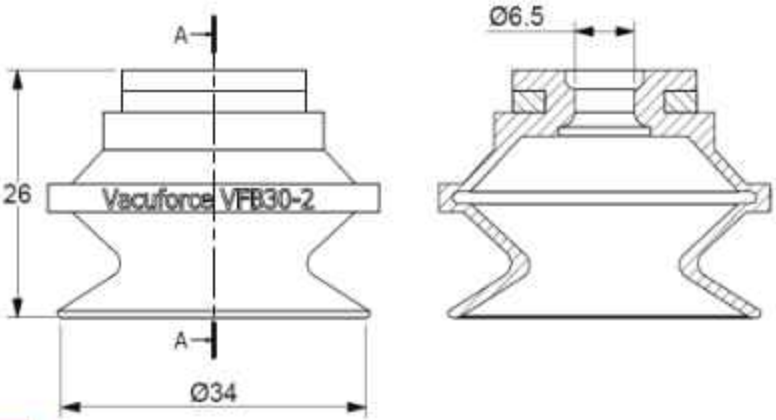

Working Parameters	
Compressed Height	12mm (bellow compresses by 14mm)
Sealing Radius min	15mm (or 30mm diameter object)

VFB | **30-2** | **N**

Series
VFB

Model	Diameter
30-2	34

Cup Material	
N	Nitrile NBR
S	Red Silicone
ST	White Translucent Silicone
SMI	Metal Impregnated Red Silicone
STMI	Metal Impregnated White Translucent Silicone

For cup material data please refer to vacuforce.com/materials

Cup Fittings	
Use Fitting Type	D



Part number example VFB30-2S
34mm diameter single bellows vacuum cup in red silicone

VFB40 SINGLE BELLOWS CUP

- 43mm Diameter (1.69") single bellows design
- Compensates for height variances in part picking
- Can seal on convex and concave surfaces
- NBR, FDA compliant Red and White Silicone, non conductive silicone





DIMENSIONS (mm)

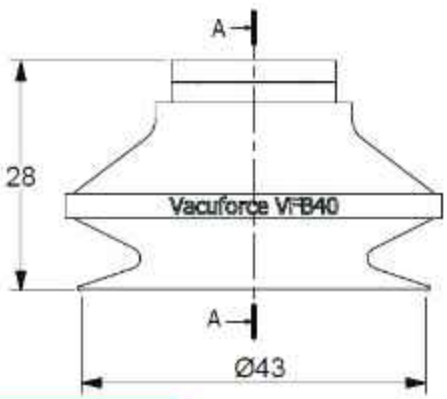

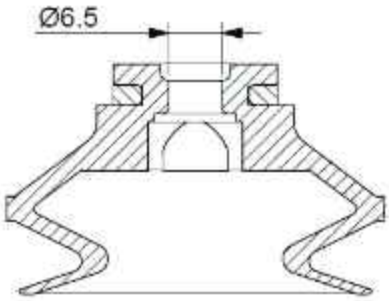

APPLICATIONS

- Small part pick and place
- Injection molding
- Labeling machinery
- Electronics parts pick and place
- Direct food contact pick and place

Working Parameters	
Compressed Height	15mm (bellow compresses by 13mm)
Sealing Radius min	20mm (or 40mm diameter object)

VFB | **40** | **N**

Series	Model	Diameter
	40	43

Cup Material	
N	Nitrile NBR
S	Red Silicone
ST	White Translucent Silicone
SMI	Metal Impregnated Red Silicone
STMI	Metal Impregnated White Translucent Silicone

For cup material data please refer to vacuforce.com/materials

Part number example VFB40S
43mm diameter single bellows vacuum cup in red silicone

Cup Fittings	
Use Fitting Type	D



VFB50-2 SINGLE BELLOWS CUP

- 53mm Diameter (2.08") single bellows design
- Compensates for height variances in part picking
- Can seal on convex and concave surfaces
- NBR, FDA compliant Red and White Silicone, non conductive silicone







DIMENSIONS (mm)

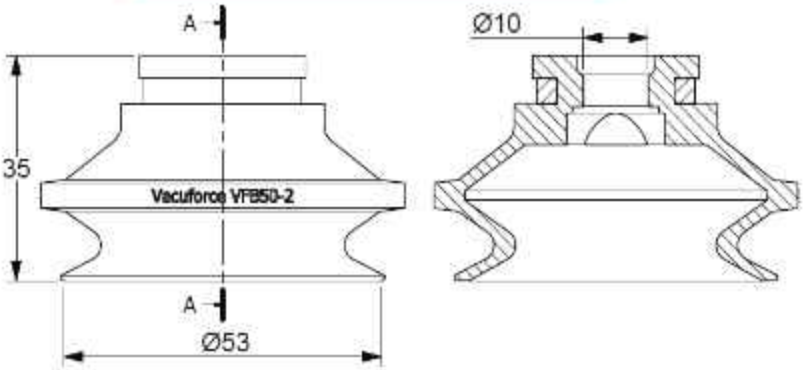

APPLICATIONS

- Small part pick and place
- Injection molding
- Labeling machinery
- Electronics parts pick and place
- Direct food contact pick and place

Working Parameters	
Compressed Height	17mm (bellow compresses by 18mm)
Sealing Radius min	30mm (or 60mm diameter object)

VFB | **50-2** | **N**

Series
VFB

Model	Diameter
50-2	53

Cup Material	
N	Nitrile NBR
S	Red Silicone
ST	White Translucent Silicone
SMI	Metal Impregnated Red Silicone
STMI	Metal Impregnated White Translucent Silicone

For cup material data please refer to vacuforce.com/materials

Cup Fittings	
Use Fitting Type	E



Part number example VFB50-2S
53mm diameter single bellows vacuum cup in red silicone

VFB75W SINGLE BELLOWS CUP

- 78mm Diameter (3.0") single bellows design
- Compensates for height variances in part picking
- Can seal on convex and concave surfaces
- NBR, FDA compliant Red and White Silicone, non conductive silicone



VFB	75W	N
Series	Model / Diameter	Cup Material

Model	Diameter
75W	78

Cup Material	
N	Nitrile NBR
S	Red Silicone



For cup material data please refer to vacuforce.com/materials

Part number example VFB75WS
78mm diameter single bellows vacuum cup in red silicone

DIMENSIONS (mm)

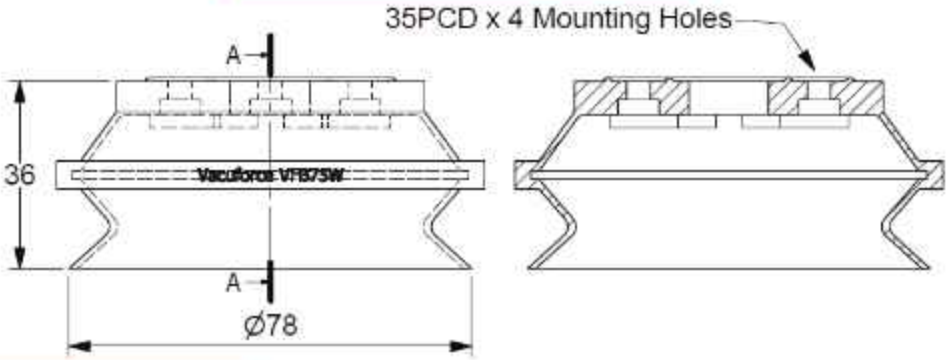

APPLICATIONS

- Large part pick and place
- Injection molding
- Carton palletizing
- Box handling
- Large steel plates

Working Parameters	
Compressed Height	16mm (bellow compresses by 20mm)
Sealing Radius min	40mm (or 80mm diameter object)

VFB75W Cup Fittings



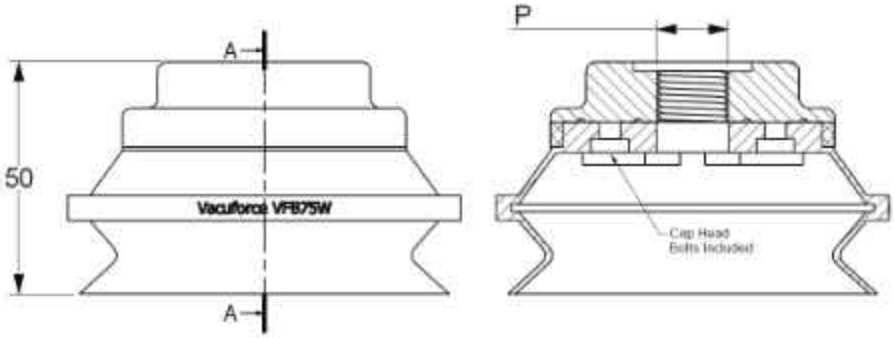

Fitting Model	P (Vacuum Port)
VFCF75-1/8	G1/8
VFCF75-1/4	G1/4
VFCF75-3/8	G3/8

VFB110W SINGLE BELLOWS CUP

- 115mm Diameter (4.53") single bellows design
- Compensates for height variances in part picking
- Can seal on convex and concave surfaces
- NBR, FDA compliant Red and White Silicone, non conductive silicone



VFB	110W	N
Series	Model	Diameter
	110W	115

Cup Material	
N	Nitrile NBR
S	Red Silicone



For cup material data please refer to vacuforce.com/materials

Part number example VFB110WS
115mm diameter single bellows vacuum cup in red silicone

DIMENSIONS (mm)

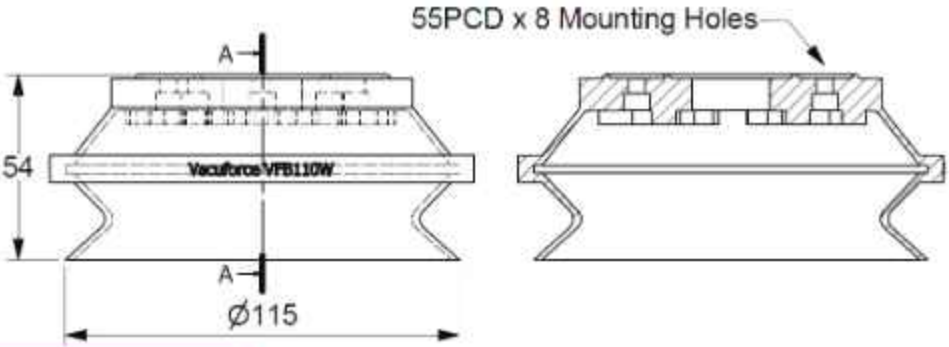

APPLICATIONS

- Large part pick and place
- Injection molding
- Carton palletizing
- Box handling
- Large steel plates

Working Parameters	
Compressed Height	24mm (bellow compresses by 30mm)
Sealing Radius min	60mm (or 120mm diameter object)

VFB110W Cup Fittings



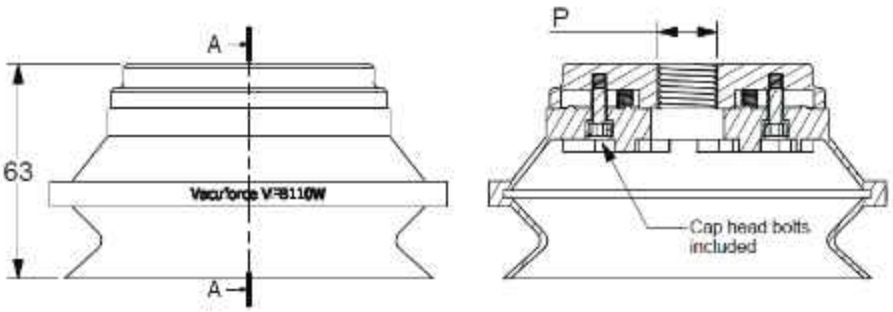

Fitting Model	P (Vacuum Port)
VFCF110-3/8	G3/8
VFCF110-1/2	G1/2

VFB150W SINGLE BELLOWS CUP

- 155mm Diameter (6") single bellows design
- Compensates for height variances in part picking
- Can seal on convex and concave surfaces
- NBR, FDA compliant Red and White Silicone, non conductive silicone



VFB	150W	N
Series	Model: 150W	Diameter: 155

Cup Material	
N	Nitrile NBR
S	Red Silicone



For cup material data please refer to vacuforce.com/materials

Part number example VFB150WS
155mm diameter single bellows vacuum cup in red silicone

DIMENSIONS (mm)

APPLICATIONS

- Large part pick and place
- Injection molding
- Carton palletizing
- Box handling
- Large steel plates

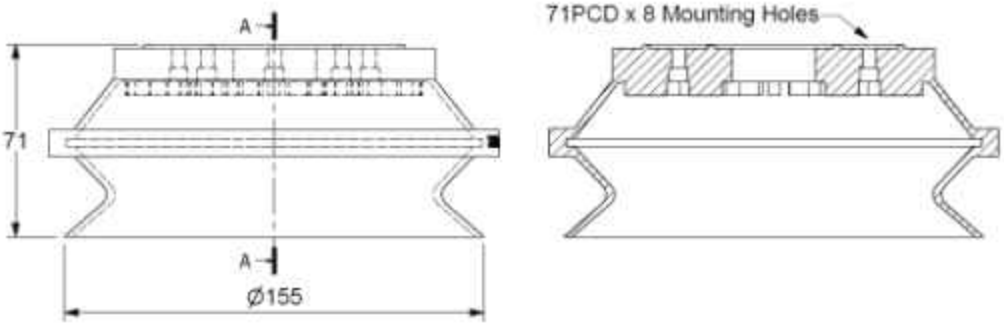

Working Parameters	
Compressed Height	26mm (bellow compresses by 45mm)
Sealing Radius min	75mm (or 150mm diameter object)

VFB150W Cup Fittings



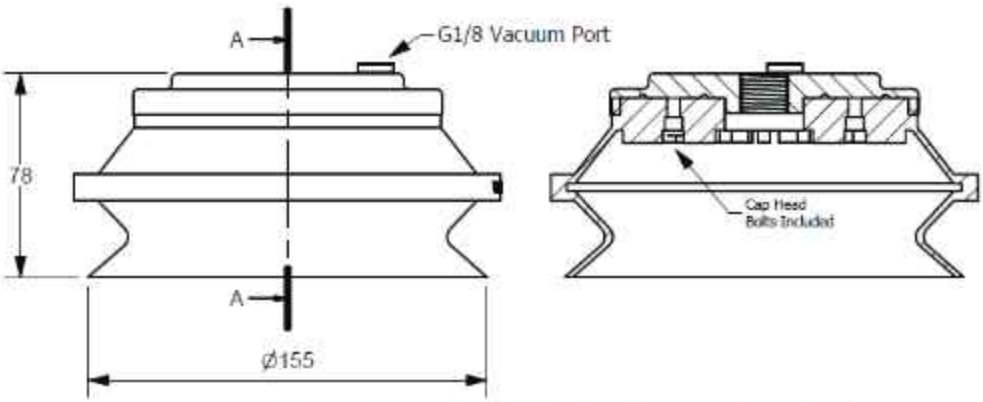

Fitting Model	P (Vacuum Port)
VFCF150-1/2	G1/2

B1.5 SINGLE BELLOWS CUP

- Single bellows design
- Compensates for height variances in part picking
- Can seal on convex and concave surfaces
- Available from 11mm to 53mm diameter
- NBR, FDA Silicone materials



B1.5 — Series

11

Model	Diameter
11	11
13	13
16	16
20	20
22	22
25	25
33	33
43	43
53	53

N

Cup Material	
N	Nitrile
ST	White Translucent Silicone

Part number example B1.5-43ST
43mm diameter single bellows vacuum cup in white silicone



B1.5-11 SINGLE BELLOWS CUP

- 11mm Diameter (0.433") single bellows design
- Compensates for height variances in part picking
- Can seal on convex and concave surfaces
- NBR, FDA compliant white Silicone





APPLICATIONS

- Small part pick and place
- Injection molding
- Labeling machinery
- Direct food contact pick and place

DIMENSIONS (mm)

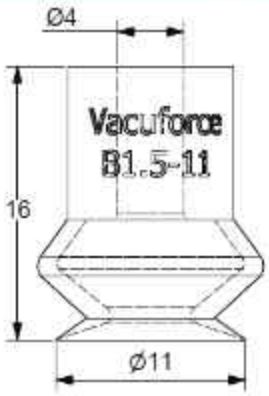

B1.5	11	N
Series	Model / Diameter	Cup Material

Model	Diameter
11	11

Cup Material	
N	Nitrile NBR
ST	White Translucent Silicone

Cup Fittings	
Use Fitting Type	B



For cup material data please refer to vacuforce.com/materials

Part number example B1.5-11ST
11mm diameter single bellows vacuum cup in white silicone

B1.5-13 SINGLE BELLOWS CUP

- 13mm Diameter (0.512") single bellows design
- Compensates for height variances in part picking
- Can seal on convex and concave surfaces
- NBR, FDA compliant white Silicone





APPLICATIONS

- Small part pick and place
- Injection molding
- Labeling machinery
- Direct food contact pick and place

DIMENSIONS (mm)



B1.5	13	N
Series	Model / Diameter	Cup Material

Model	Diameter
13	13

Cup Material	
N	Nitrile NBR
ST	White Translucent Silicone

Cup Fittings	
Use Fitting Type	B



For cup material data please refer to vacuforce.com/materials

Part number example B1.5-13ST
13mm diameter single bellows vacuum cup in white silicone

B1.5-16 SINGLE BELLOWS CUP

- 16mm Diameter (0.630") single bellows design
- Compensates for height variances in part picking
- Can seal on convex and concave surfaces
- NBR, FDA compliant white Silicone





APPLICATIONS

- Small part pick and place
- Injection molding
- Labeling machinery
- Direct food contact pick and place

DIMENSIONS (mm)

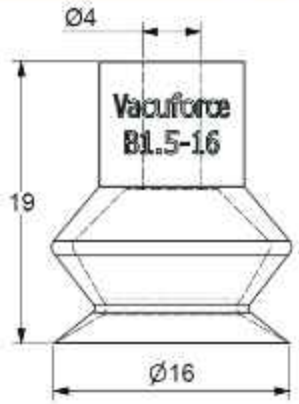

B1.5	16		N	
Series	Model	Diameter	Cup Material	
	16	16	N	Nitrile NBR
			ST	White Translucent Silicone

Cup Fittings	
Use Fitting Type	B



For cup material data please refer to vacuforce.com/materials

Part number example B1.5-16ST
16mm diameter single bellows vacuum cup in white silicone

B1.5-20 SINGLE BELLOWS CUP

- 20mm Diameter (0.787") single bellows design
- Compensates for height variances in part picking
- Can seal on convex and concave surfaces
- NBR, FDA compliant white Silicone





APPLICATIONS

- Small part pick and place
- Injection molding
- Labeling machinery
- Direct food contact pick and place

DIMENSIONS (mm)

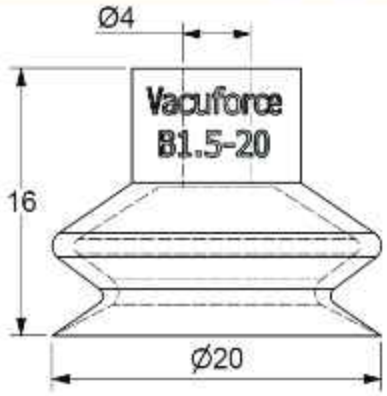

B1.5	20	N
Series	Model / Diameter	Cup Material

Model	Diameter
20	20

Cup Material	
N	Nitrile NBR
ST	White Translucent Silicone

Cup Fittings	
Use Fitting Type	B



For cup material data please refer to vacuforce.com/materials

Part number example B1.5-20ST
20mm diameter single bellows vacuum cup in white silicone

B1.5-22 SINGLE BELLOWS CUP

- 22mm Diameter (0.866") single bellows design
- Compensates for height variances in part picking
- Can seal on convex and concave surfaces
- NBR, FDA compliant white Silicone





APPLICATIONS

- Small part pick and place
- Injection molding
- Labeling machinery
- Direct food contact pick and place

DIMENSIONS (mm)

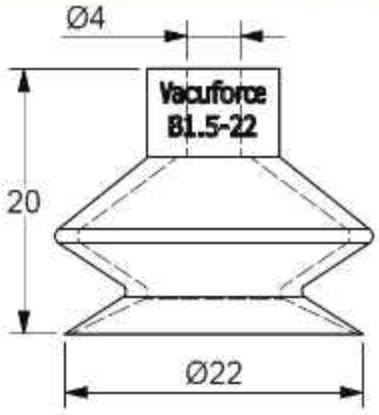

B1.5	22		N	
Series	Model	Diameter	Cup Material	
	22	22	N	Nitrile NBR
			ST	White Translucent Silicone

Cup Fittings	
Use Fitting Type	B



For cup material data please refer to vacuforce.com/materials

Part number example B1.5-22ST
22mm diameter single bellows vacuum cup in white silicone

B1.5-25 SINGLE BELLOWS CUP

- 25mm Diameter (0.984") single bellows design
- Compensates for height variances in part picking
- Can seal on convex and concave surfaces
- NBR, FDA compliant white Silicone





APPLICATIONS

- Small part pick and place
- Injection molding
- Labeling machinery
- Direct food contact pick and place

DIMENSIONS (mm)

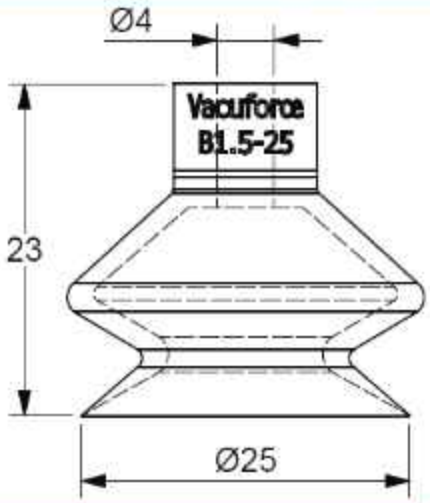

B1.5	25	N
Series	Model / Diameter	Cup Material

Model	Diameter
25	25

Cup Material	
N	Nitrile NBR
ST	White Translucent Silicone

Cup Fittings	
Use Fitting Type	B



For cup material data please refer to vacuforce.com/materials

Part number example B1.5-25ST
25mm diameter single bellows vacuum cup in white silicone

B1.5-33 SINGLE BELLOWS CUP

- 33mm Diameter (1.3") single bellows design
- Compensates for height variances in part picking
- Can seal on convex and concave surfaces
- NBR, FDA compliant white Silicone





APPLICATIONS

- Small part pick and place
- Injection molding
- Labeling machinery
- Direct food contact pick and place

DIMENSIONS (mm)

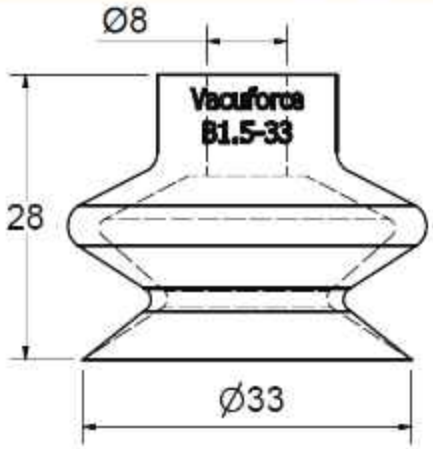

B1.5	33		N	
Series	Model	Diameter	Cup Material	
	33	33	N	Nitrile NBR
			ST	White Translucent Silicone

Cup Fittings	
Use Fitting Type	F



For cup material data please refer to vacuforce.com/materials

Part number example B1.5-33ST
33mm diameter single bellows vacuum cup in white silicone

B1.5-43 SINGLE BELLOWS CUP

- 43mm Diameter (1.69") single bellows design
- Compensates for height variances in part picking
- Can seal on convex and concave surfaces
- NBR, FDA compliant white Silicone





APPLICATIONS

- Small part pick and place
- Injection molding
- Labeling machinery
- Direct food contact pick and place

DIMENSIONS (mm)

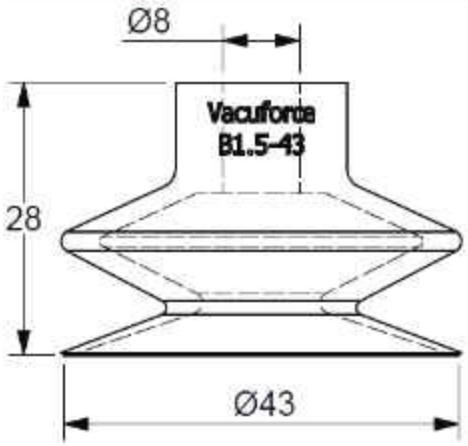

B1.5	43	N
Series	Model / Diameter	Cup Material

Model	Diameter
43	43

Cup Material	
N	Nitrile NBR
ST	White Translucent Silicone

Cup Fittings	
Use Fitting Type	F



For cup material data please refer to vacuforce.com/materials

Part number example B1.5-43ST
43mm diameter single bellows vacuum cup in white silicone

B1.5-53 SINGLE BELLOWS CUP

- 53mm Diameter (2.08") single bellows design
- Compensates for height variances in part picking
- Can seal on convex and concave surfaces
- NBR, FDA compliant white Silicone





APPLICATIONS

- Small part pick and place
- Injection molding
- Labeling machinery
- Direct food contact pick and place

DIMENSIONS (mm)

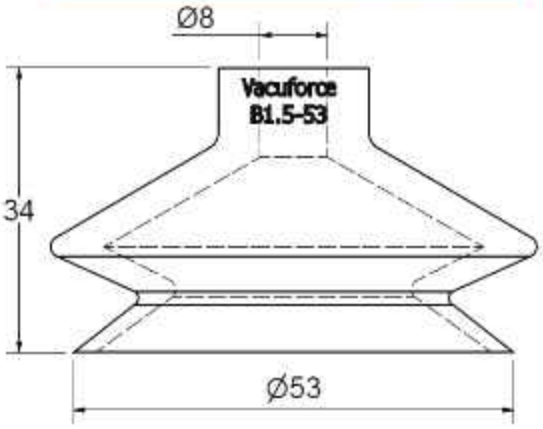

B1.5	33		N	
Series	Model	Diameter	Cup Material	
	53	53	N	Nitrile NBR
			ST	White Translucent Silicone

Cup Fittings	
Use Fitting Type	F



For cup material data please refer to vacuforce.com/materials

Part number example B1.5-53ST
53mm diameter single bellows vacuum cup in white silicone

PJG SINGLE BELLOWS CUP

- Single bellows design
- Compensates for height variances in part picking
- Can seal on convex and concave surfaces
- Available from 4mm to 50mm diameter
- NBR, FDA Silicone materials



PJG - **40** - **SI**

PJG — Series

Model	Diameter
6	6
10	10
15	15
20	20
25	25
30	30
35	35
40	40
50	50

Cup Material	
NBR	Nitrile
SI	White Translucent Silicone

Part number example PGJ-40-NBR
40mm diameter single bellows vacuum cup in white silicone

PJG-6 SINGLE BELLOWS CUP

- 6mm Diameter single bellows design
- Compensates for height variances in part picking
- Can seal on convex and concave surfaces
- NBR, FDA compliant white Silicone





APPLICATIONS

- Small part pick and place
- Injection molding
- Labeling machinery
- Direct food contact pick and place

DIMENSIONS (mm)

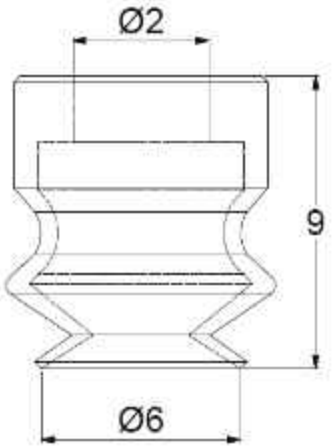

PJG – 6 – NBR

Series
PJG

Model	Diameter
6	6

Cup Material	
N	Nitrile NBR
SI	White Translucent Silicone

For cup material data please refer to vacuforce.com/materials

PJG-8 SINGLE BELLOWS CUP

- 8mm Diameter single bellows design
- Compensates for height variances in part picking
- Can seal on convex and concave surfaces
- NBR, FDA compliant white Silicone





APPLICATIONS

- Small part pick and place
- Injection molding
- Labeling machinery
- Direct food contact pick and place

DIMENSIONS (mm)

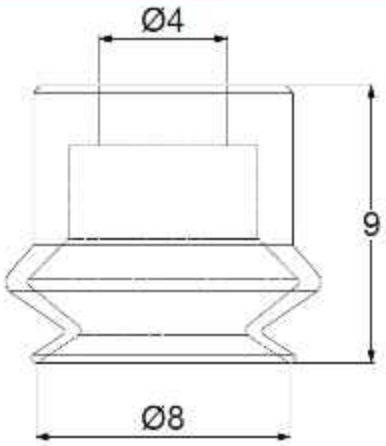

PJG - 8 - NBR

Series
PJG

Model	Diameter
8	8

Cup Material	
N	Nitrile NBR
SI	White Translucent Silicone

For cup material data please refer to vacuforce.com/materials

PJG-10 SINGLE BELLOWS CUP

- 10mm Diameter single bellows design
- Compensates for height variances in part picking
- Can seal on convex and concave surfaces
- NBR, FDA compliant white Silicone





APPLICATIONS

- Small part pick and place
- Injection molding
- Labeling machinery
- Direct food contact pick and place

DIMENSIONS (mm)

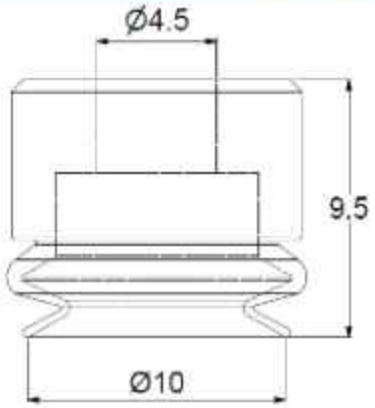

PJG – 10 – NBR

Series
PJG

Model	Diameter
10	10

Cup Material	
N	Nitrile NBR
SI	White Translucent Silicone

For cup material data please refer to vacuforce.com/materials

PJG-15 SINGLE BELLOWS CUP

- 15mm Diameter single bellows design
- Compensates for height variances in part picking
- Can seal on convex and concave surfaces
- NBR, FDA compliant white Silicone





APPLICATIONS

- Small part pick and place
- Injection molding
- Labeling machinery
- Direct food contact pick and place

DIMENSIONS (mm)

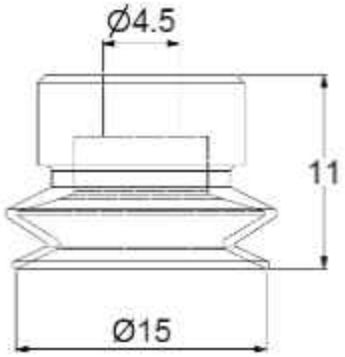

PJG – **15** – **NBR**

Series
PJG

Model	Diameter
15	15

Cup Material	
N	Nitrile NBR
SI	White Translucent Silicone

For cup material data please refer to vacuforce.com/materials

PJG-20 SINGLE BELLOWS CUP

- 20mm Diameter single bellows design
- Compensates for height variances in part picking
- Can seal on convex and concave surfaces
- NBR, FDA compliant white Silicone





APPLICATIONS

- Small part pick and place
- Injection molding
- Labeling machinery
- Direct food contact pick and place

DIMENSIONS (mm)

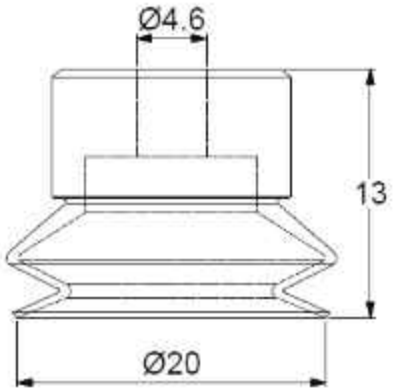

PJG – 20 – NBR

Series
PJG

Model	Diameter
20	20

Cup Material	
N	Nitrile NBR
SI	White Translucent Silicone

For cup material data please refer to vacuforce.com/materials

PJG-25 SINGLE BELLOWS CUP

- 25mm Diameter single bellows design
- Compensates for height variances in part picking
- Can seal on convex and concave surfaces
- NBR, FDA compliant white Silicone





APPLICATIONS

- Small part pick and place
- Injection molding
- Labeling machinery
- Direct food contact pick and place

DIMENSIONS (mm)

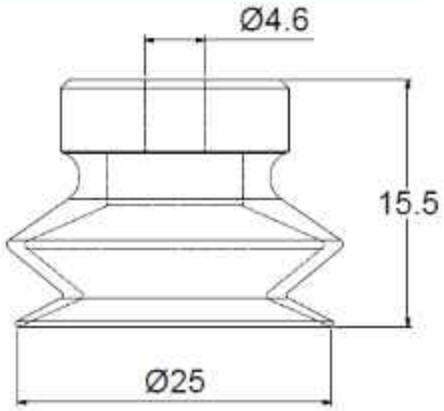

PJG – 25 – NBR

Series
PJG

Model	Diameter
25	25

Cup Material	
N	Nitrile NBR
SI	White Translucent Silicone

For cup material data please refer to vacuforce.com/materials

PJG-30 SINGLE BELLOWS CUP

- 30mm Diameter single bellows design
- Compensates for height variances in part picking
- Can seal on convex and concave surfaces
- NBR, FDA compliant white Silicone





APPLICATIONS

- Small part pick and place
- Injection molding
- Labeling machinery
- Direct food contact pick and place

DIMENSIONS (mm)

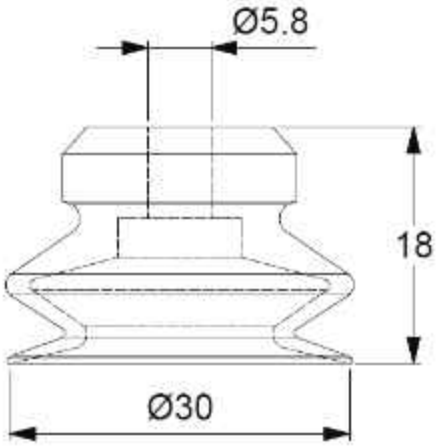

PJG – 30 – NBR

Series
PJG

Model	Diameter
30	30

Cup Material	
N	Nitrile NBR
SI	White Translucent Silicone

For cup material data please refer to vacuforce.com/materials

PJG-35 SINGLE BELLOWS CUP

- 35mm Diameter single bellows design
- Compensates for height variances in part picking
- Can seal on convex and concave surfaces
- NBR, FDA compliant white Silicone





APPLICATIONS

- Small part pick and place
- Injection molding
- Labeling machinery
- Direct food contact pick and place

DIMENSIONS (mm)

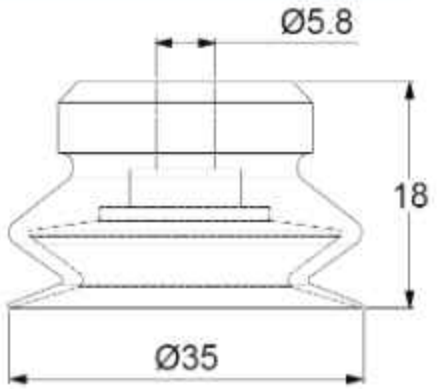

PJG - 35 - NBR

Series
PJG

Model	Diameter
35	35

Cup Material	
N	Nitrile NBR
SI	White Translucent Silicone

For cup material data please refer to vacuforce.com/materials

PJG-40 SINGLE BELLOWS CUP

- 40mm Diameter single bellows design
- Compensates for height variances in part picking
- Can seal on convex and concave surfaces
- NBR, FDA compliant white Silicone





APPLICATIONS

- Small part pick and place
- Injection molding
- Labeling machinery
- Direct food contact pick and place

DIMENSIONS (mm)

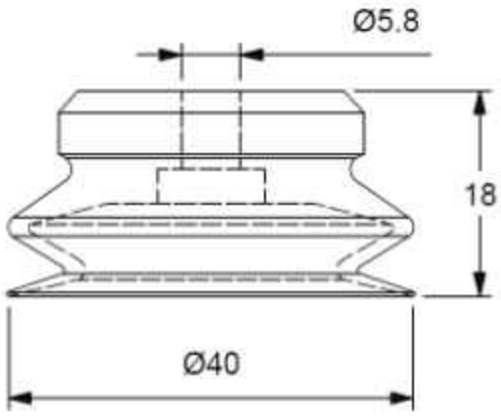

PJG – 40 – NBR

Series
PJG

Model	Diameter
40	40

Cup Material	
N	Nitrile NBR
SI	White Translucent Silicone

For cup material data please refer to vacuforce.com/materials

PJG-50 SINGLE BELLOWS CUP

- 50mm Diameter single bellows design
- Compensates for height variances in part picking
- Can seal on convex and concave surfaces
- NBR, FDA compliant white Silicone





APPLICATIONS

- Small part pick and place
- Injection molding
- Labeling machinery
- Direct food contact pick and place

DIMENSIONS (mm)

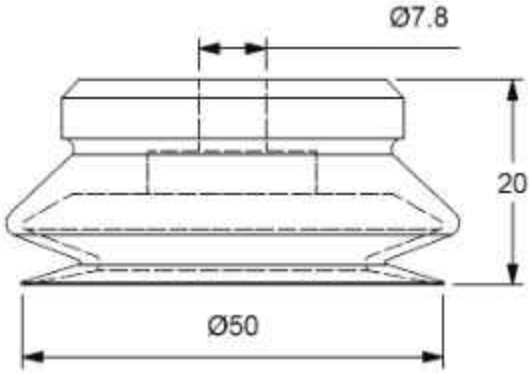

PJG - 50 - NBR

Series
PJG

Model	Diameter
50	50

Cup Material	
N	Nitrile NBR
SI	White Translucent Silicone

For cup material data please refer to vacuforce.com/materials

B2.5 DOUBLE BELLOWS CUP

- Double bellows design
- Compensates for height variances in part picking
- Can seal on convex and concave surfaces
- Available from 5mm to 60mm diameter
- NBR, FDA Silicone materials



B2.5 — Series

Model	Diameter
5	5
7	7
10	10
14	14
18	18
20	20
25	25
32	32
42	42
60	60

N — Cup Material

N	Nitrile
ST	White Translucent Silicone

Part number example B2.5-42ST
42mm diameter double bellows vacuum cup in white silicone



B2.5-5 DOUBLE BELLOWS CUP

- 5mm Diameter (0.196") double bellows design
- Compensates for height variances in part picking
- Can seal on convex and concave surfaces
- NBR, FDA compliant white Silicone





APPLICATIONS

- Small part pick and place
- Injection molding
- Labeling machinery
- Direct food contact pick and place

DIMENSIONS (mm)

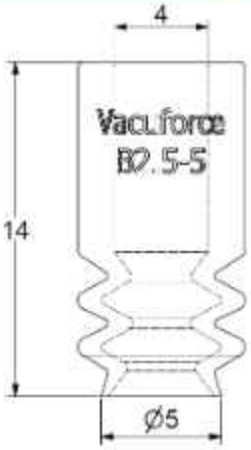

B2.5	5	N
Series	Model / Diameter	Cup Material

Model	Diameter
5	5

Cup Material	
N	Nitrile NBR
ST	White Translucent Silicone

Cup Fittings	
Use Fitting Type	B



For cup material data please refer to vacuforce.com/materials

Part number example B2.5-5ST
5mm diameter double bellows vacuum cup in white silicone

B2.5-7 DOUBLE BELLOWS CUP

- 7mm Diameter (0.276") double bellows design
- Compensates for height variances in part picking
- Can seal on convex and concave surfaces
- NBR, FDA compliant white Silicone





APPLICATIONS

- Small part pick and place
- Injection molding
- Labeling machinery
- Direct food contact pick and place

DIMENSIONS (mm)



B2.5 | 7 | N

Series	Model	Diameter
	7	7

Cup Material	
N	Nitrile NBR
ST	White Translucent Silicone

Cup Fittings	
Use Fitting Type	B



For cup material data please refer to vacuforce.com/materials

Part number example B2.5-7ST
7mm diameter double bellows vacuum cup in white silicone

B2.5-10 DOUBLE BELLOWS CUP

- 10mm Diameter (0.390") double bellows design
- Compensates for height variances in part picking
- Can seal on convex and concave surfaces
- NBR, FDA compliant white Silicone





APPLICATIONS

- Small part pick and place
- Injection molding
- Labeling machinery
- Direct food contact pick and place

DIMENSIONS (mm)



B2.5	10	N
Series	Model / Diameter	Cup Material

Model	Diameter
10	10

Cup Material	
N	Nitrile NBR
ST	White Translucent Silicone

Cup Fittings	
Use Fitting Type	B



For cup material data please refer to vacuforce.com/materials

Part number example B2.5-10ST
10mm diameter double bellows vacuum cup in white silicone

B2.5-14 DOUBLE BELLOWS CUP

- 14mm Diameter (0.550") double bellows design
- Compensates for height variances in part picking
- Can seal on convex and concave surfaces
- NBR, FDA compliant white Silicone





APPLICATIONS

- Small part pick and place
- Injection molding
- Labeling machinery
- Direct food contact pick and place

DIMENSIONS (mm)

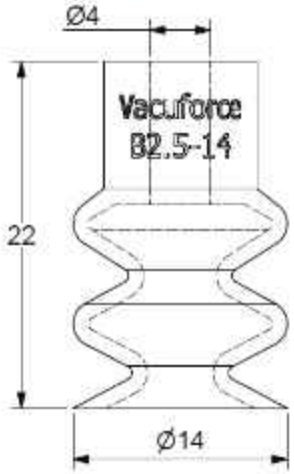

B2.5	14	N
Series	Model / Diameter	Cup Material

Model	Diameter
14	14

Cup Material	
N	Nitrile NBR
ST	White Translucent Silicone

Cup Fittings	
Use Fitting Type	B



For cup material data please refer to vacuforce.com/materials

Part number example B2.5-14ST
14mm diameter double bellows vacuum cup in white silicone

B2.5-18 DOUBLE BELLOWS CUP

- 18mm Diameter (0.709") double bellows design
- Compensates for height variances in part picking
- Can seal on convex and concave surfaces
- NBR, FDA compliant white Silicone





APPLICATIONS

- Small part pick and place
- Injection molding
- Labeling machinery
- Direct food contact pick and place

DIMENSIONS (mm)

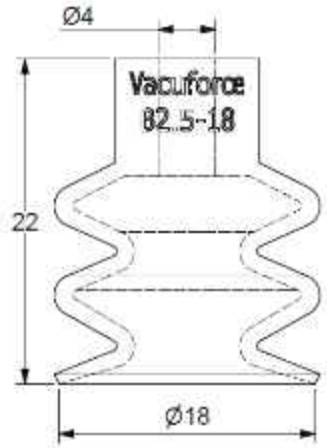

B2.5	18	N
Series	Model / Diameter	Cup Material

Model	Diameter
18	18

Cup Material	
N	Nitrile NBR
ST	White Translucent Silicone

Cup Fittings	
Use Fitting Type	B



For cup material data please refer to vacuforce.com/materials

Part number example B2.5-18ST
18mm diameter double bellows vacuum cup in white silicone

B2.5-20 DOUBLE BELLOWS CUP

- 20mm Diameter (0.787") double bellows design
- Compensates for height variances in part picking
- Can seal on convex and concave surfaces
- NBR, FDA compliant white Silicone





APPLICATIONS

- Small part pick and place
- Injection molding
- Labeling machinery
- Direct food contact pick and place

DIMENSIONS (mm)

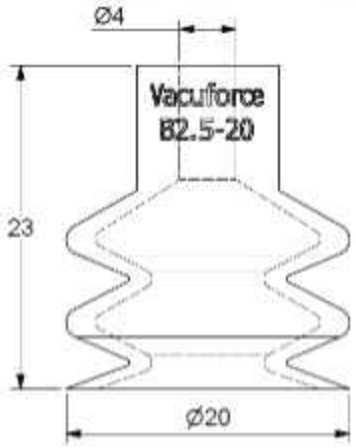

B2.5	20	N
Series	Model / Diameter	Cup Material

Model	Diameter
20	20

Cup Material	
N	Nitrile NBR
ST	White Translucent Silicone

Cup Fittings	
Use Fitting Type	B



For cup material data please refer to vacuforce.com/materials

Part number example B2.5-20ST
20mm diameter double bellows vacuum cup in white silicone

B2.5-25 DOUBLE BELLOWS CUP

- 25mm Diameter (0.984") double bellows design
- Compensates for height variances in part picking
- Can seal on convex and concave surfaces
- NBR, FDA compliant white Silicone





APPLICATIONS

- Small part pick and place
- Injection molding
- Labeling machinery
- Direct food contact pick and place

DIMENSIONS (mm)

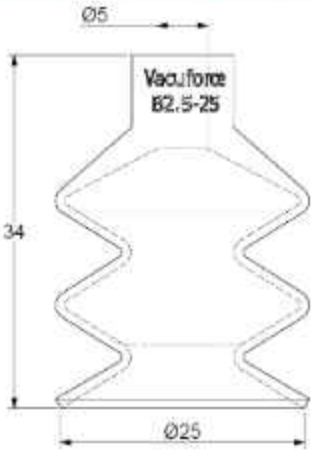

B2.5	25		N	
Series	Model	Diameter	Cup Material	
	25	25	N	Nitrile NBR
			ST	White Translucent Silicone

Cup Fittings	
Use Fitting Type	B



For cup material data please refer to vacuforce.com/materials

Part number example B2.5-25ST
25mm diameter double bellows vacuum cup in white silicone

B2.5-32 DOUBLE BELLOWS CUP

- 32mm Diameter (1.26") double bellows design
- Compensates for height variances in part picking
- Can seal on convex and concave surfaces
- NBR, FDA compliant white Silicone





APPLICATIONS

- Small part pick and place
- Injection molding
- Labeling machinery
- Direct food contact pick and place

DIMENSIONS (mm)

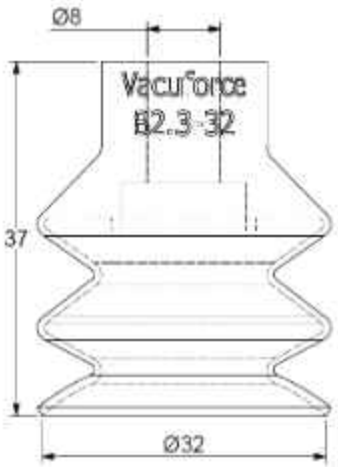

B2.5	32		N	
Series	Model	Diameter	Cup Material	
	32	32	N	Nitrile NBR
			ST	White Translucent Silicone

Cup Fittings	
Use Fitting Type	F



For cup material data please refer to vacuforce.com/materials

Part number example B2.5-32ST
32mm diameter double bellows vacuum cup in white silicone

B2.5-42 DOUBLE BELLOWS CUP

- 42mm Diameter (1.64") double bellows design
- Compensates for height variances in part picking
- Can seal on convex and concave surfaces
- NBR, FDA compliant white Silicone





APPLICATIONS

- Small part pick and place
- Injection molding
- Labeling machinery
- Direct food contact pick and place

DIMENSIONS (mm)

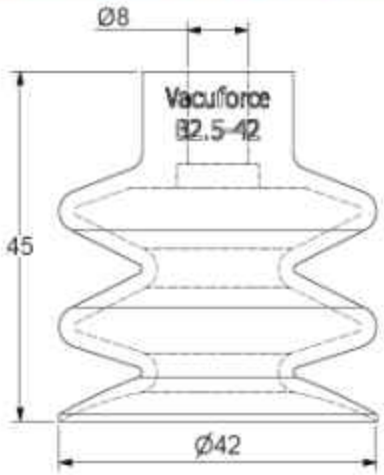

B2.5	42	N
Series	Model / Diameter	Cup Material

Model	Diameter
42	42

Cup Material	
N	Nitrile NBR
ST	White Translucent Silicone

Cup Fittings	
Use Fitting Type	F



For cup material data please refer to vacuforce.com/materials

Part number example B2.5-42ST
42mm diameter double bellows vacuum cup in white silicone

B2.5-60 DOUBLE BELLOWS CUP

- 60mm Diameter (2.36") double bellows design
- Compensates for height variances in part picking
- Can seal on convex and concave surfaces
- NBR, FDA compliant white Silicone





APPLICATIONS

- Small part pick and place
- Injection molding
- Labeling machinery
- Direct food contact pick and place

DIMENSIONS (mm)

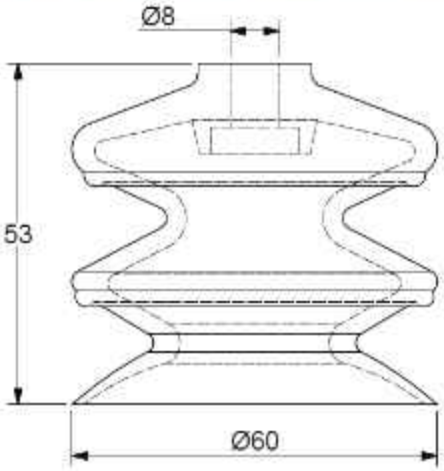

B2.5	60		N	
Series	Model	Diameter	Cup Material	
	60	60	N	Nitrile NBR
			ST	White Translucent Silicone

For cup material data please refer to vacuforce.com/materials

Part number example B2.5-60ST
60mm diameter double bellows vacuum cup in white silicone

VFDB DOUBLE BELLOWS CUP

VACUFORCE®

non-marking

- Double Bellows Design
- Compensates for Height Variances in Part Picking
- Can seal on Convex and Concave Surfaces
- Available from 20mm to 70mm Diameter
- Single and Dual Durometer Polyurethane

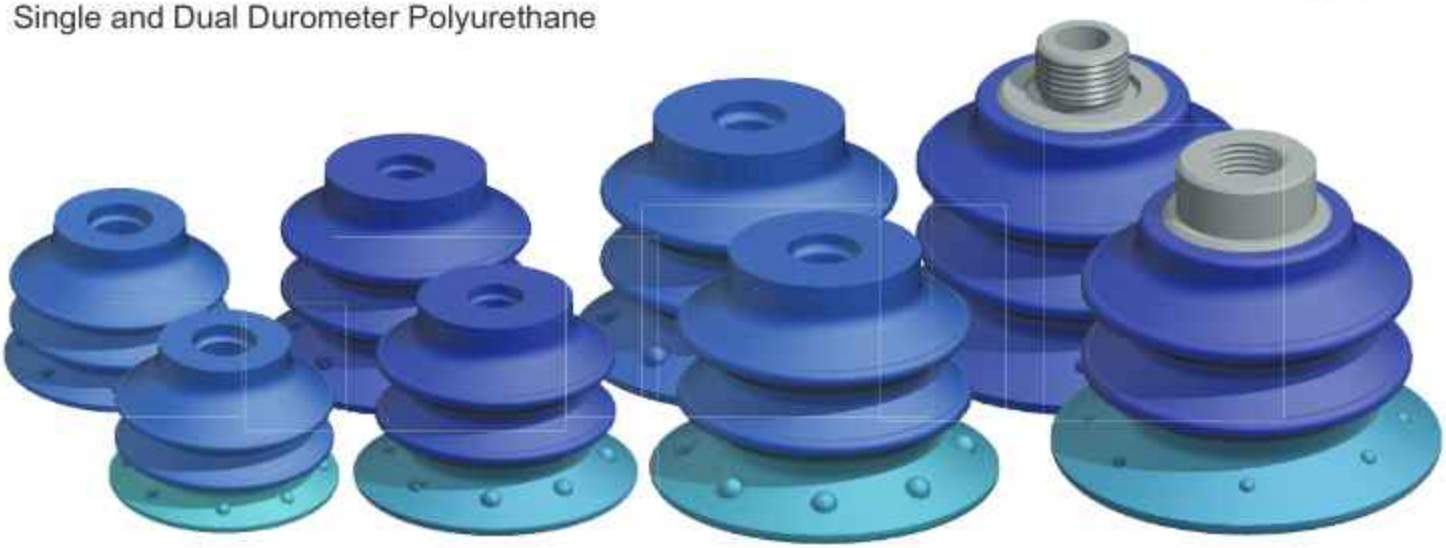

VFDB	40	DPU
Series	Model / Diameter (mm)	Cup Material

Model	Diameter (mm)
20	20
30	30
40	40
50	50
70	70

Cup Material	
PU	PU 60 Durometer
DPU	Dual PU 30/60 Durometer

For cup material data please refer to vacuforce.com/materials

Part number example VFDP40DPU
40mm Diameter double bellows vacuum cup in dual durometer polyurethane compound (30/60 = lip/body)

Dual Durometer Vacuum Cups (DPU)

The DPU compound variant of these vacuum cups offer a dual Durometer polyurethane construction. The body of the vacuum cup is a 60 Durometer polyurethane offering rigidity and strength, whereas the lip of the vacuum cup is a 30 Durometer polyurethane offering superior sealing capabilities particularly on rough or curved surfaces.

VFDB20 DOUBLE BELLOWS CUP

- 20mm Diameter (0.787") double bellows design
- Dual durometer option - rigid 60 durometer body with soft 30 duro lip
- Non marking materials
- Compensates for height variances in part picking
- Can seal on convex and concave surfaces
- Single and dual durometer polyurethane







APPLICATIONS

- Small part pick and place
- Plastic and steel handling
- Glass and decorative stone handling
- Cardboard box handling

DIMENSIONS (mm)

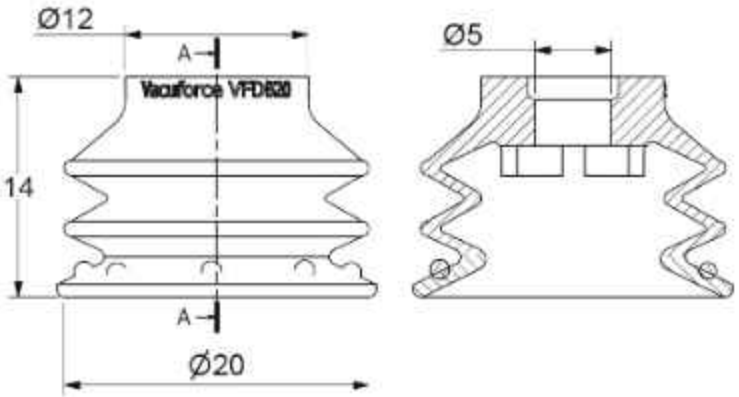

VFDB	20	PU
Series	Model / Diameter	Cup Material
	20 / 20	PU: 60 Durometer Polyurethane
		DPU: 30/60 Dual Durometer Polyurethane

Cup Fittings	
Use Fitting Type	C



For cup fittings refer to page 1.86

For cup material data please refer to vacuforce.com/materials

Part number example VFDB20DPU
20mm diameter dual durometer polyurethane diameter double bellows vacuum cup

VFDB30 DOUBLE BELLOWS CUP

- 30mm Diameter (1.18") double bellows design
- Dual durometer option - rigid 60 durometer body with soft 30 duro lip
- Non marking materials
- Compensates for height variances in part picking
- Can seal on convex and concave surfaces
- Single and dual durometer polyurethane







APPLICATIONS

- Small part pick and place
- Plastic and steel handling
- Glass and decorative stone handling
- Cardboard box handling

DIMENSIONS (mm)

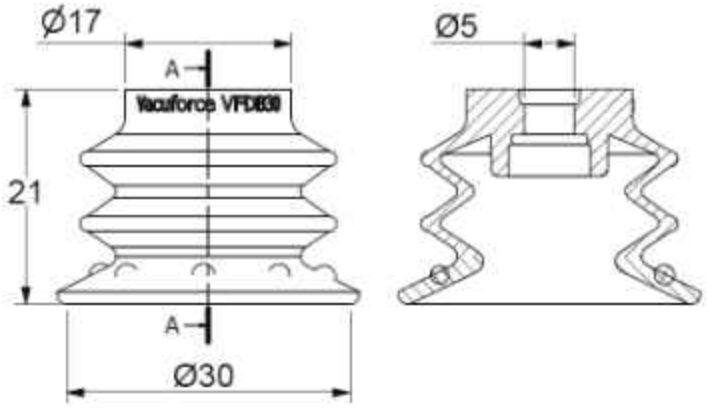

VFDB	30	PU
Series	Model / Diameter	Cup Material

Model	Diameter
30	30

	Cup Material
PU	60 Durometer Polyurethane
DPU	30/60 Dual Durometer Polyurethane

Cup Fittings	
Use Fitting Type	C



For cup material data please refer to vacuforce.com/materials

Part number example VFDB30DPU
30mm diameter dual durometer polyurethane diameter double bellows vacuum cup

VFDB35 DOUBLE BELLOWS CUP

- 35mm Diameter (1.37") double bellows design
- Dual durometer option - rigid 60 durometer body with soft 30 duro lip
- Non marking materials
- Compensates for height variances in part picking
- Can seal on convex and concave surfaces
- Single and dual durometer polyurethane







APPLICATIONS

- Small part pick and place
- Plastic and steel handling
- Glass and decorative stone handling
- Cardboard box handling

DIMENSIONS (mm)

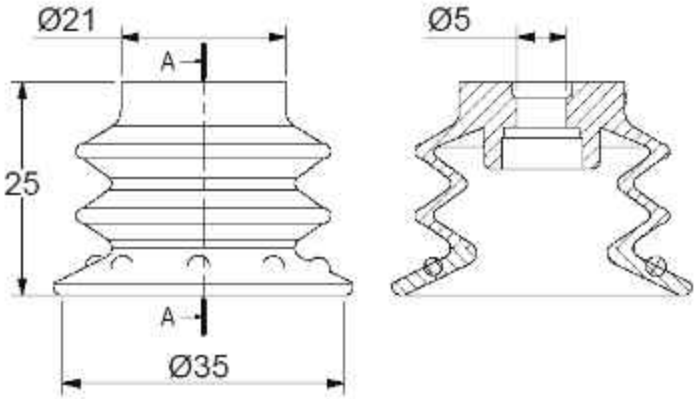

VFDB	35		PU	
Series	Model	Diameter	Cup Material	
	35	35	DPU	30/60 Dual Durometer Polyurethane

Cup Fittings	
Use Fitting Type	C



For cup material data please refer to vacuforce.com/materials

Part number example VFDB30DPU
35mm diameter dual durometer polyurethane diameter double bellows vacuum cup

VFDB40 DOUBLE BELLOWS CUP

- 40mm Diameter (0.787") double bellows design
- Dual durometer option - rigid 60 durometer body with soft 30 duro lip
- Non marking materials
- Compensates for height variances in part picking
- Can seal on convex and concave surfaces
- Single and dual durometer polyurethane







APPLICATIONS

- Small part pick and place
- Plastic and steel handling
- Glass and decorative stone handling
- Cardboard box handling

DIMENSIONS (mm)

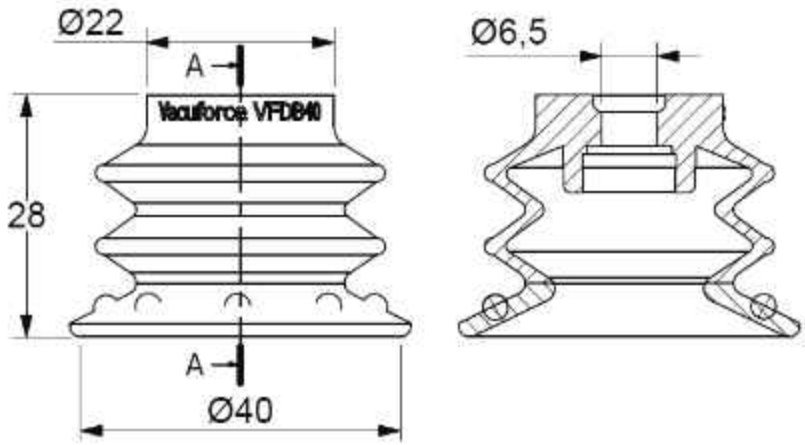

VFDB	40	PU
Series	Model / Diameter	Cup Material

Model	Diameter
40	40

Cup Material	
PU	60 Durometer Polyurethane
DPU	30/60 Dual Durometer Polyurethane

Cup Fittings	
Use Fitting Type	D



For cup material data please refer to vacuforce.com/materials

Part number example VFDB40DPU
40mm diameter dual durometer polyurethane diameter double bellows vacuum cup

VFDB50 DOUBLE BELLOWS CUP

- 50mm Diameter (1.97") double bellows design
- Dual durometer option - rigid 60 durometer body with soft 30 duro lip
- Non marking materials
- Compensates for height variances in part picking
- Can seal on convex and concave surfaces
- Single and dual durometer polyurethane







APPLICATIONS

- Small part pick and place
- Plastic and steel handling
- Glass and decorative stone handling
- Cardboard box handling

DIMENSIONS (mm)

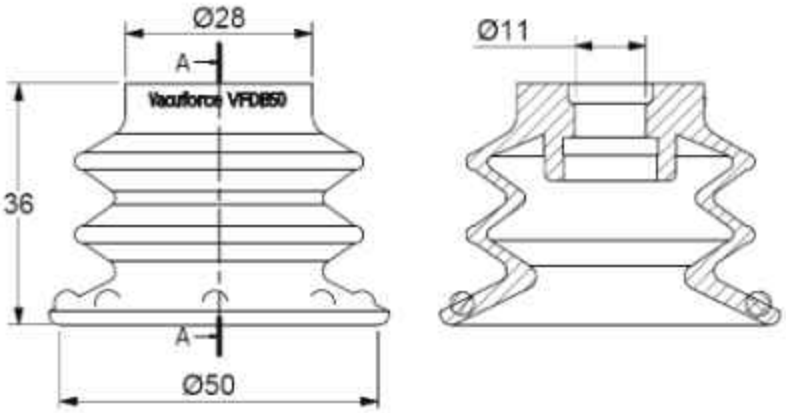

VFDB	50		PU	
Series	Model	Diameter	Cup Material	
	50	50	PU	60 Durometer Polyurethane
			DPU	30/60 Dual Durometer Polyurethane

Cup Fittings	
Use Fitting Type	E



For cup material data please refer to vacuforce.com/materials

Part number example VFDB50DPU
50mm diameter dual durometer polyurethane diameter double bellows vacuum cup

VFDB70 DOUBLE BELLOWS CUP

- 70mm Diameter (2.75") double bellows design
- Dual durometer option - rigid 60 durometer body with soft 30 duro lip
- Non marking materials
- Compensates for height variances in part picking
- Can seal on convex and concave surfaces
- Single and dual durometer polyurethane





DIMENSIONS (mm)

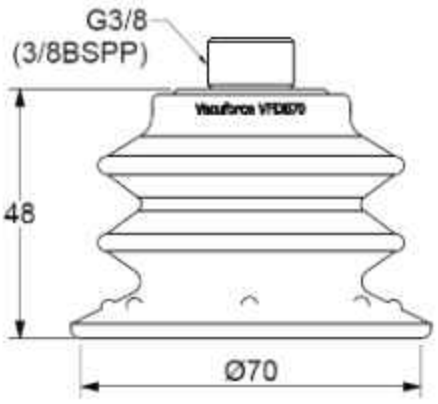

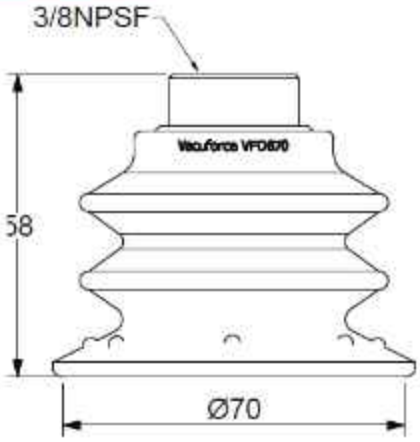

VFDB	70	PU	-	G3/8M
Series	Model / Diameter	Cup Material		Model

Model	Diameter
70	70

Cup Material	
PU	60 Durometer Polyurethane
DPU	30/60 Dual Durometer Polyurethane

Model
G3/8M
3/8NPSF

APPLICATIONS

- Part pick and place
- Plastic and steel handling
- Glass and decorative stone handling
- Cardboard box handling

For cup material data please refer to vacuforce.com/materials

Part number example VFDB70DPU-G3/8M
70mm diameter dual durometer polyurethane diameter double bellows vacuum cup with G3/8 male fitting

VFBL MULTIPLE BELLOWS CUP

- Multiple bellows design
- Compensates for height variances in part picking
- Thin web design allows for sealing on crinkled or uneven surfaces such as plastic wrapping in the food industry
- Available from 20mm to 50mm Diameter
- NBR, FDA Silicone and Metal Detectable Materials



VFBL | **40-2** | **N**

Series
VFBL

Model	Diameter
20-2	20
30-2	30
40-2	40
50-2	50

Cup Material	
N	Nitrile
S	Red Silicone
ST	White Translucent Silicone
SMI	Metal Impregnated Red Silicone

For cup material data please refer to vacuforce.com/materials

Part number example VFBL30-2SMI
30mm diameter single multiple vacuum cup in red metal impregnated silicone



This cup series is available in metal detectable FDA compliant silicone.

For red colored metal detectable silicone use material code SMI.

For white translucent metal detectable silicone use material code STMI.



VFBL20 DOUBLE BELLOWS CUP

- 20mm Diameter (0.787") multiple bellows design
- Thin web design allows for sealing on crinkled or uneven surfaces such as plastic wrapping in the food industry
- NBR, FDA Silicone and Metal Detectable Materials
- Compensates for height variances in part picking
- Can seal on convex and concave surfaces



This cup series is available in metal detectable FDA compliant silicone.







APPLICATIONS

- Small part pick and place
- Plastic and food packaging
- Direct food contact with silicone materials

DIMENSIONS (mm)

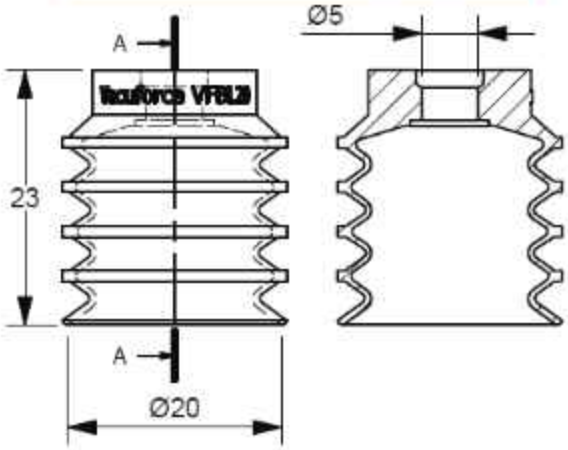

VFBL	20		S
Series	Model	Diameter	Cup Material
	20	20	

N	Nitrile
S	Red Silicone
ST	White Translucent Silicone
SMI	Metal Impregnated Red Silicone

Cup Fittings	
Use Fitting Type	C



For cup material data please refer to vacuforce.com/materials

Part number example VFBL20-2SMI
20mm diameter multiple bellows vacuum cup in red metal impregnated silicone

VFBL30-2 DOUBLE BELLOWS CUP

- 30mm Diameter (1.18") multiple bellows design
- Thin web design allows for sealing on crinkled or uneven surfaces such as plastic wrapping in the food industry
- NBR, FDA Silicone and Metal Detectable Materials
- Compensates for height variances in part picking
- Can seal on convex and concave surfaces



This cup series is available in metal detectable FDA compliant silicone.







APPLICATIONS

- Small part pick and place
- Plastic and food packaging
- Direct food contact with silicone materials

DIMENSIONS (mm)

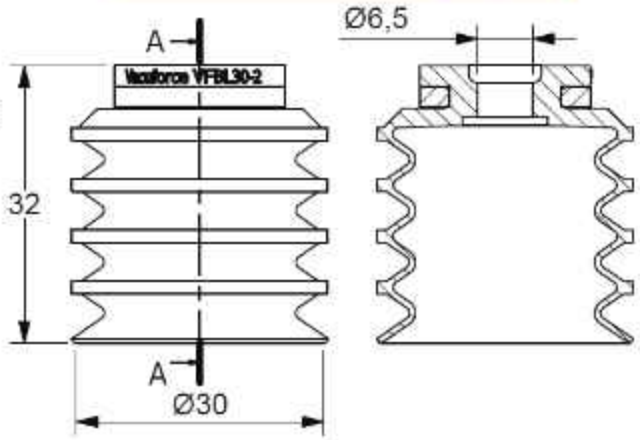

VFBL	30-2		S
Series	Model	Diameter	Cup Material
	30-2	30	

Cup Material	
N	Nitrile
S	Red Silicone
ST	White Translucent Silicone
SMI	Metal Impregnated Red Silicone

Cup Fittings	
Use Fitting Type	D



For cup material data please refer to vacuforce.com/materials

Part number example VFBL30-2SMI
30mm diameter multiple bellows vacuum cup in red metal impregnated silicone

VFBL40 DOUBLE BELLOWS CUP

- 40mm Diameter (1.57") multiple bellows design
- Thin web design allows for sealing on crinkled or uneven surfaces such as plastic wrapping in the food industry
- NBR, FDA Silicone and Metal Detectable Materials
- Compensates for height variances in part picking
- Can seal on convex and concave surfaces



This cup series is available in metal detectable FDA compliant silicone.







APPLICATIONS

- Small part pick and place
- Plastic and food packaging
- Direct food contact with silicone materials

DIMENSIONS (mm)

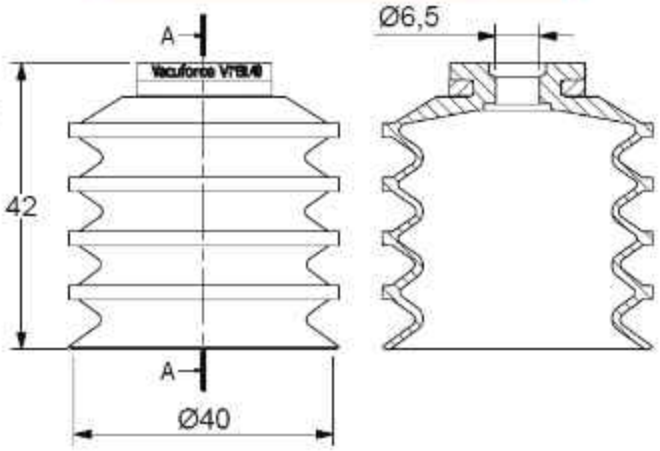

VFBL	40	S
Series	Model / Diameter	Cup Material

Model	Diameter
40-2	40

Cup Material	
N	Nitrile
S	Red Silicone
ST	White Translucent Silicone
SMI	Metal Impregnated Red Silicone

Cup Fittings	
Use Fitting Type	D



For cup material data please refer to vacuforce.com/materials

Part number example VFBL40-2SMI
40mm diameter multiple bellows vacuum cup in red metal impregnated silicone

VFBL50-2 DOUBLE BELLOWS CUP

- 50mm Diameter (1.97") multiple bellows design
- Thin web design allows for sealing on crinkled or uneven surfaces such as plastic wrapping in the food industry
- NBR and FDA Silicone materials
- Compensates for height variances in part picking
- Can seal on convex and concave surfaces



This cup series is available in metal detectable FDA compliant silicone.





APPLICATIONS

- Small part pick and place
- Plastic and food packaging
- Direct food contact with silicone materials

DIMENSIONS (mm)

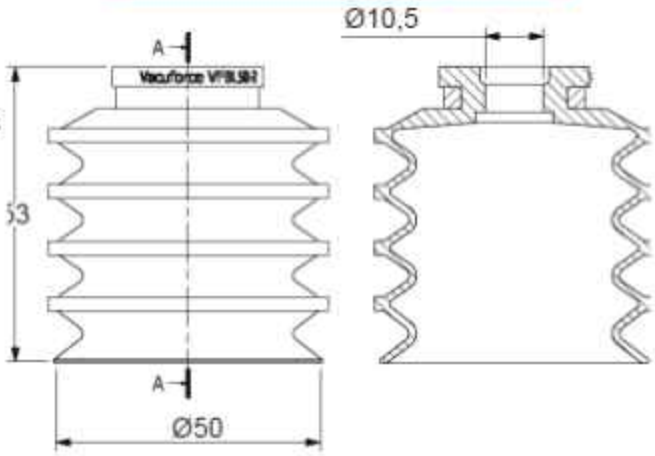

VFBL	50-2		S	
Series	Model	Diameter	Cup Material	
	50-2	50	N	Nitrile
			S	Red Silicone
			ST	White Translucent Silicone

Cup Fittings	
Use Fitting Type	E



For cup material data please refer to vacuforce.com/materials

Part number example VFBL50-2SMI
50mm diameter single multiple vacuum cup in red metal impregnated silicone

SBLP MULTIPLE BELLOWS CUPS

- Designed for handling thin plastic and paper bags
- Ultra thin seal lip ensures vacuum tight seal
- Ideal for bag opening and transfer
- High flow cup fitting
- Available in FDA silicone as standard



SBLP 30 S - G1/4

Series
SBLP

Model	Diameter
30	30
40	40
50	50

Cup Material	
S	Red Silicone

Fitting Thread	
G1/4	G1/4
G3/8	G3/8
G1/2	G1/2

Part number example SBLP40S
40mm vacuum suction cup in silicone
Part number example SBLP40S-G3/8
40mm vacuum suction cup in silicone with male G3/8 Cup Fitting

For cup material data please refer to vacuforce.com/materials

SBLP30 MULTIPLE BELLOWS CUP

- 30mm Diameter multiple bellows cup
- Designed for handling thin plastic and paper bags
- Ultra thin seal lip ensures vacuum tight seal
- Ideal for bag opening and transfer
- High flow cup fitting
- Available in FDA silicone as standard



APPLICATIONS

- Thin film packaging
- Frozen food packaging
- Direct food contact

DIMENSIONS (mm) Cup Only

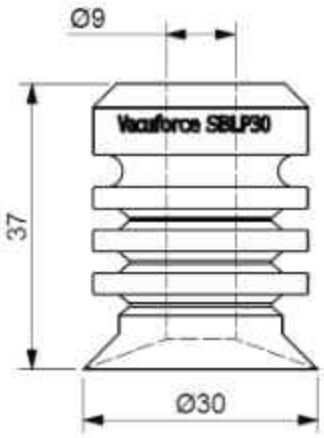

DIMENSIONS (mm) Cup & Fitting



SBLP	30	S	-	G1/4
Series	Model / Diameter	Cup Material		Fitting Thread

Model	Diameter
30	30

Cup Material	
S	Red Silicone

Fitting Thread	
G1/4	G1/4
N1/4	1/4NPT

For cup material data please refer to vacuforce.com/materials

Part number example SBLP30S - 30mm silicone vacuum cup
Part number example SBLP30S-G1/4 - 30mm silicone vacuum cup with G1/4 fitting

SBLP40 MULTIPLE BELLOWS CUPS

- 40mm Diameter multiple bellows cup
- Designed for handling thin plastic and paper bags
- Ultra thin seal lip ensures vacuum tight seal
- Ideal for bag opening and transfer
- High flow cup fitting
- Available in FDA silicone as standard



APPLICATIONS

- Thin film packaging
- Frozen food packaging
- Direct food contact

DIMENSIONS (mm) Cup Only

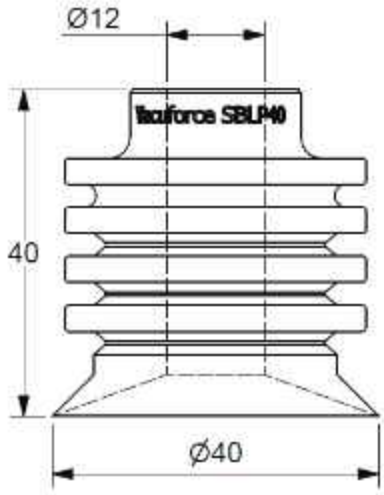

DIMENSIONS (mm) Cup & Fitting

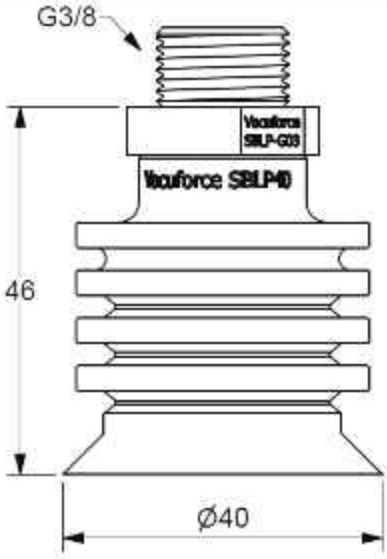

SBLP	40	S	–	G3/8
Series	Model / Diameter	Cup Material		Fitting Thread

Model	Diameter
40	40

Cup Material	
S	Red Silicone

Fitting Thread	
G3/8	G3/8
N3/8	3/8NPT

For cup material data please refer to vacuforce.com/materials

Part number example SBLP40S - 40mm silicone vacuum cup
Part number example SBLP40S-G3/8 - 40mm silicone vacuum cup with G1/4 fitting

SBLP50 BELLOWS CUP

- 50mm Diameter multiple bellows cup
- Designed for handling thin plastic and paper bags
- Ultra thin seal lip ensures vacuum tight seal
- Ideal for bag opening and transfer
- High flow cup fitting
- Available in FDA silicone as standard



APPLICATIONS

- Thin film packaging
- Frozen food packaging
- Direct food contact

DIMENSIONS (mm) Cup Only

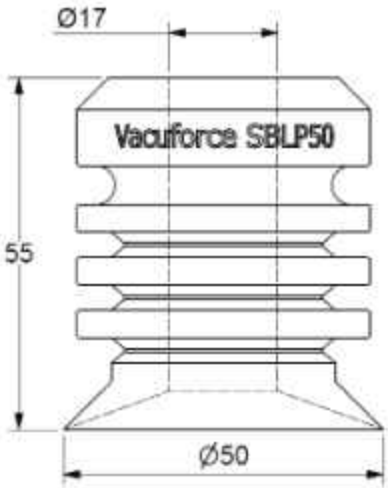

DIMENSIONS (mm) Cup & Fitting

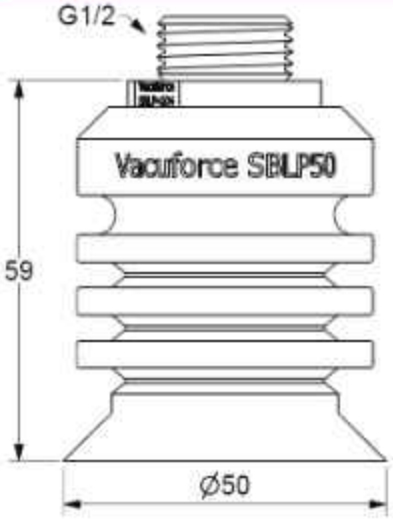

SBLP	50		S		-	G1/2	
Series	Model	Diameter	Cup Material			Fitting Thread	
	50	50	S	Red Silicone		G1/2	G1/2
						N1/2	1/2NPT

For cup material data please refer to vacuforce.com/materials

Part number example SBLP50S - 50mm silicone vacuum cup
Part number example SBLP50S-G1/2 - 50mm silicone vacuum cup with G1/2 fitting

STC SINGLE BELLOWS TRACTION CUPS

The STC series of vacuum cups are designed to offer the vacuum user a cup that can pick up on angled surfaces and adapt to products such as formed sheet steel that may have a tight radius. The cups include an aluminum male or female threaded fitting for machinery and vacuum source connection.

This cup is available in Nitrile rubber in 60 Durometer. Ideal for handling pressed steel sheet and glass products. The single bellows design offers slight vertical movement when vacuum is applied independent of the machinery which aids in sheet separation and also compliance on concave and convex surfaces.



STC 100N - 60 - G3/8F

Series	Model	Diameter (mm)	Durometer	Thread
	22N	22	60	G1/4F
	30N	30		G1/4M
	40N	40		G3/8F
	50N	50		M10M
	60N	60		M14M
	80N	80		RA
	100N	100		
	125N	125		

APPLICATIONS

- Automotive steel stamping
- Glass handling
- Plywood transfer
- Handling of oily steel surfaces
- Concave and convex surfaces
- Large box & carton handling

Part number example STC100N-60-G3/8F
100mm diameter bellows vacuum cup in 60 durometer NBR with G3/8 female thread connection port.

For cup material data please refer to vacuforce.com/materials

LEVEL COMPENSATORS



Refer to page 1.33 for suitable level compensators for this vacuum cup range.

QUICK RELEASE FITTINGS



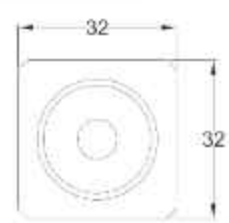

Model	T
QRG38	G3/8
QRN38	3/8NPSF



STC22 SINGLE BELLOWS TRACTION CUP

- 22mm Diameter single bellows traction cup
- Designed for steel stamping and glass handling industry
- Heavy duty construction offering superior cycle life
- Various machinery connection options



STC 22N - 60 - G3/8F

Series	Model	Diameter (mm)	Durometer	Thread
	22N	22	60	G1/4F
				G1/4M
				G3/8F
				M10M
				M14M
				RA

Part number example STC22N-60-G3/8F
22mm diameter bellows vacuum cup in 60 durometer NBR with G3/8 female thread connection port.

For cup material data please refer to vacuforce.com/materials

DIMENSIONS (mm)

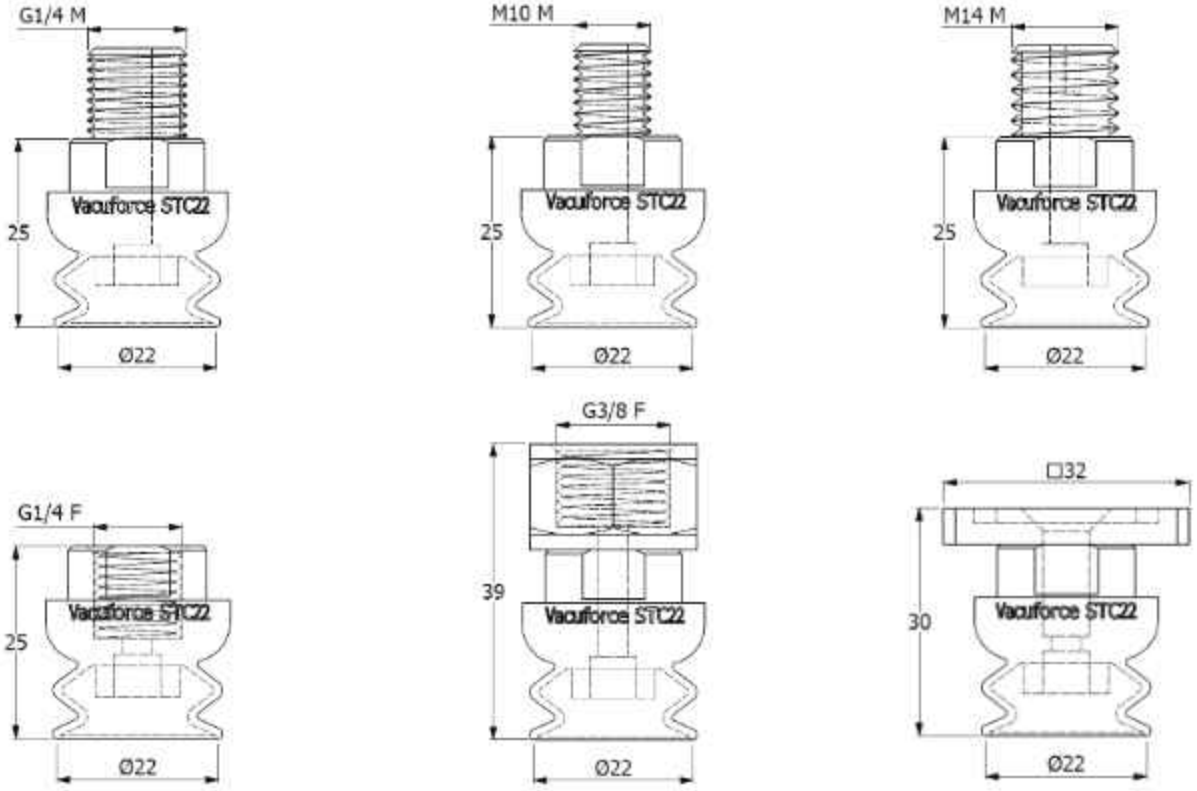

STC30 SINGLE BELLOWS TRACTION CUP

- 30mm Diameter single bellows traction cup
- Designed for steel stamping and glass handling industry
- Heavy duty construction offering superior cycle life
- Various machinery connection options



STC 30N – 60 – G3/8F

Series	Model	Diameter (mm)	Durometer	Thread
	30N	30	60	G1/4F
				G1/4M
				G3/8F
				M10M
				M14M
				RA

Part number example STC30N-60-G3/8F
30mm diameter bellows vacuum cup in 60 durometer NBR with G3/8 female thread connection port.

For cup material data please refer to vacuforce.com/materials

DIMENSIONS (mm)

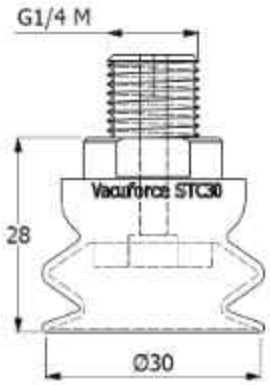

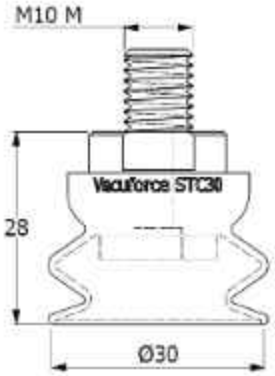

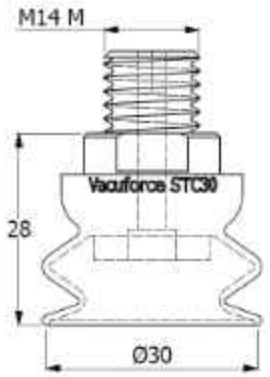

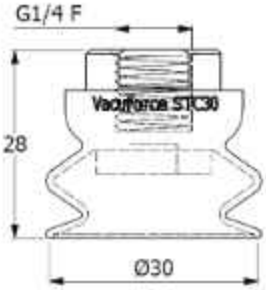

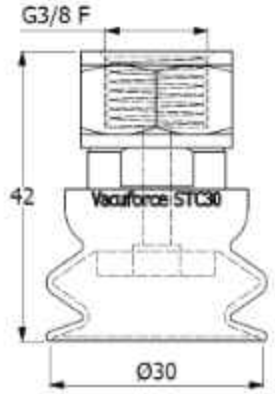



STC40 SINGLE BELLOWS TRACTION CUP

- 40mm Diameter single bellows traction cup
- Designed for steel stamping and glass handling industry
- Heavy duty construction offering superior cycle life
- Various machinery connection options



STC 40N - 60 - G3/8F

Series	Model	Diameter (mm)	Durometer	Thread
	40N	40	60	G1/4F
				G1/4M
				G3/8F
				M10M
				M14M
				RA

Part number example STC40N-60-G3/8F
40mm diameter bellows vacuum cup in 60 durometer NBR with G3/8 female thread connection port.

For cup material data please refer to vacuforce.com/materials

DIMENSIONS (mm)

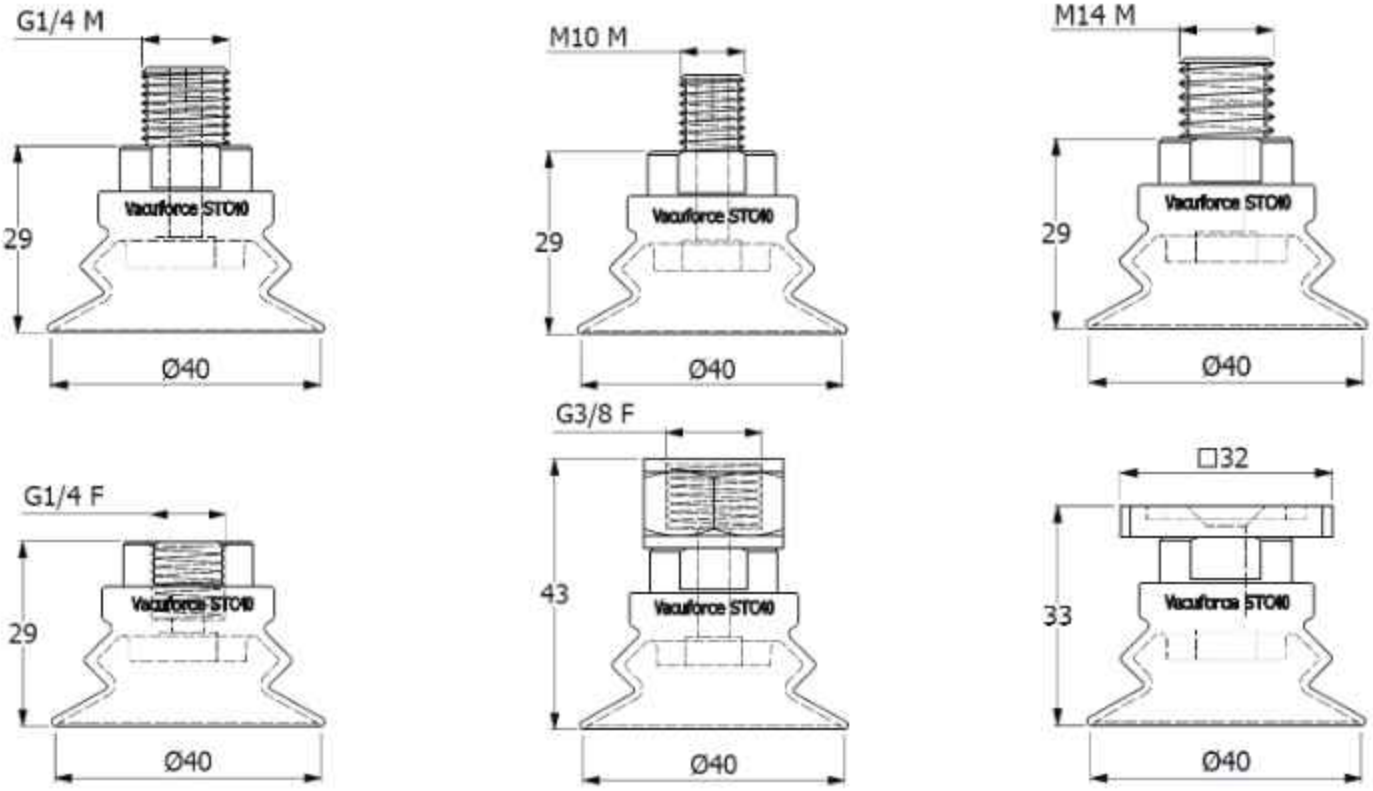

STC50 SINGLE BELLOWS TRACTION CUP

- 50mm Diameter single bellows traction cup
- Designed for steel stamping and glass handling industry
- Heavy duty construction offering superior cycle life
- Various machinery connection options

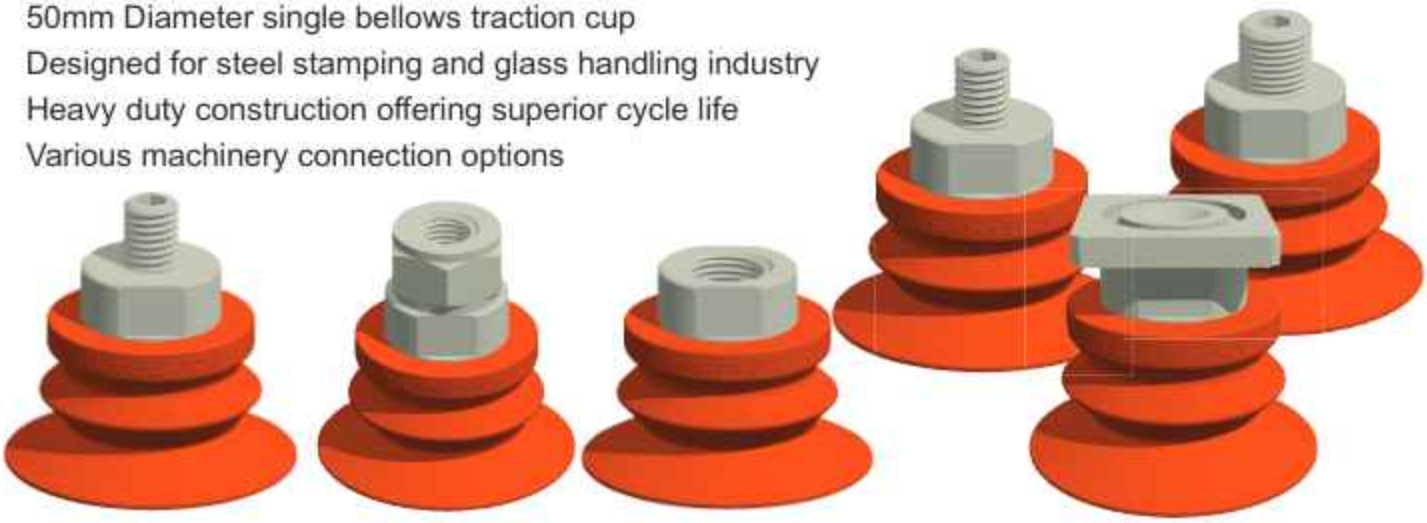

STC 50N – 60 – G3/8F

Series	Model	Diameter (mm)	Durometer	Thread
	50N	50	60	G1/4F
				G1/4M
				G3/8F
				M10M
				M14M
				RA

Part number example STC50N-60-G3/8F
50mm diameter bellows vacuum cup in 60 durometer NBR with G3/8 female thread connection port.

For cup material data please refer to vacuforce.com/materials

DIMENSIONS (mm)

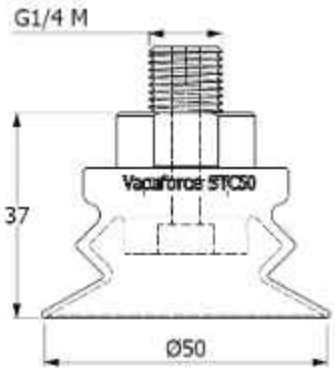

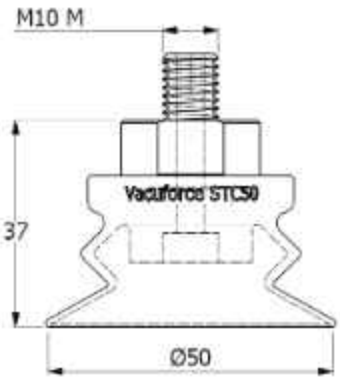

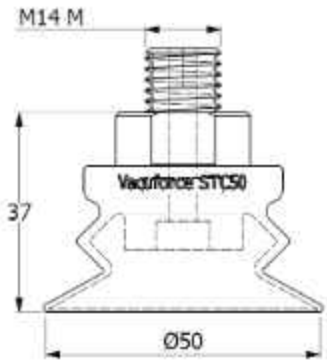

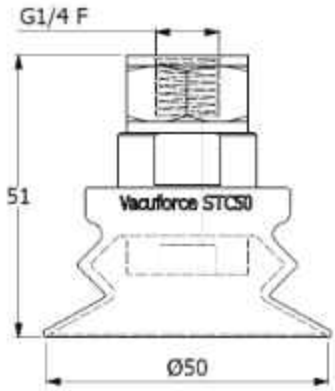

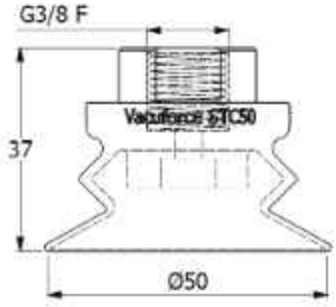

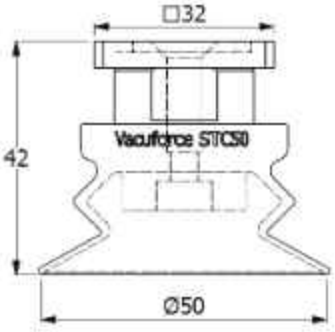

STC60 SINGLE BELLOWS TRACTION CUP

- 60mm Diameter single bellows traction cup
- Designed for steel stamping and glass handling industry
- Heavy duty construction offering superior cycle life
- Various machinery connection options

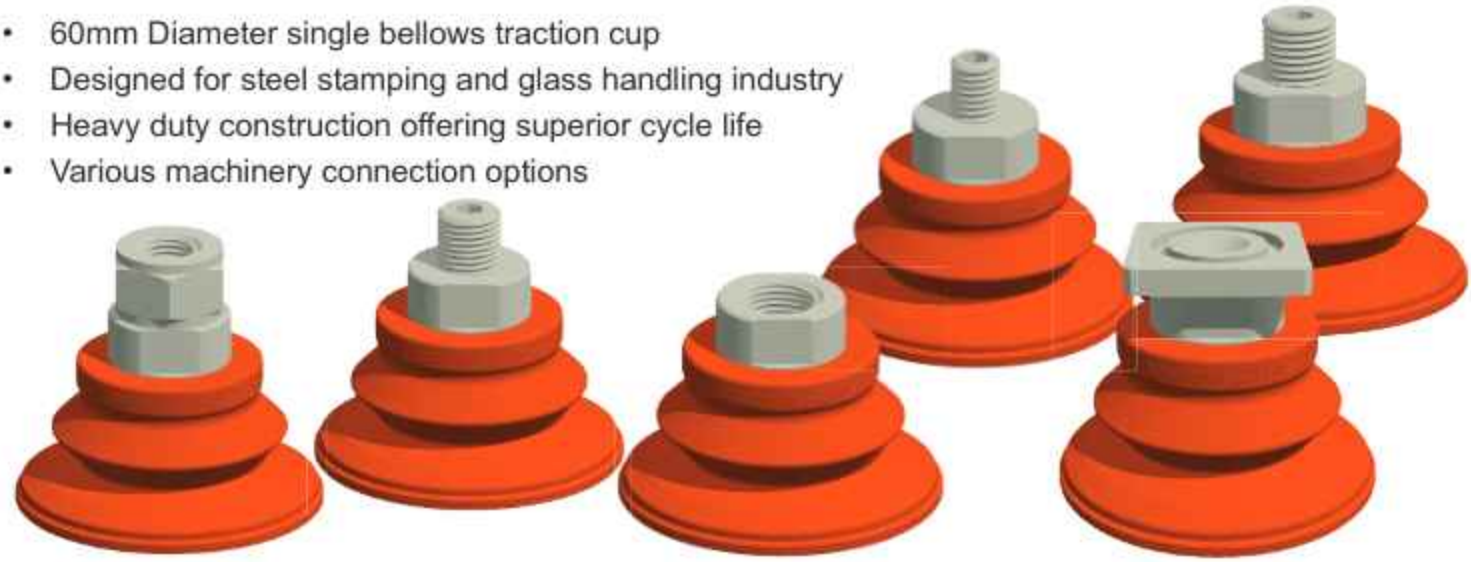

STC | **60N** | **60** | **G3/8F**

Series	Model	Diameter (mm)	Durometer	Thread
	60N	60	60	G1/4F
				G1/4M
				G3/8F
				M10M
				M14M
				RA

Part number example STC60N-60-G3/8F
60mm diameter bellows vacuum cup in 60 durometer NBR with G3/8 female thread connection port.

For cup material data please refer to vacuforce.com/materials

DIMENSIONS (mm)

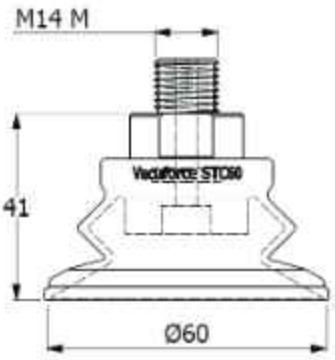

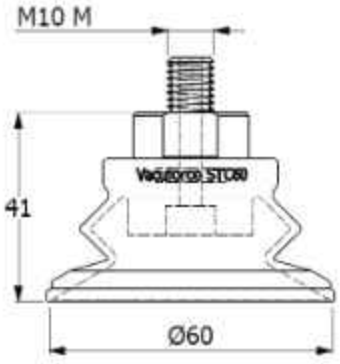

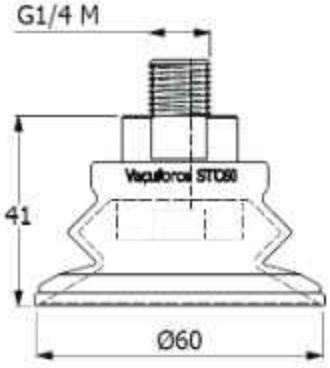

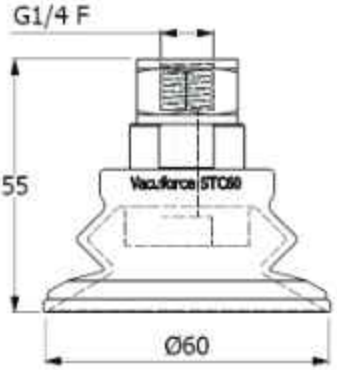

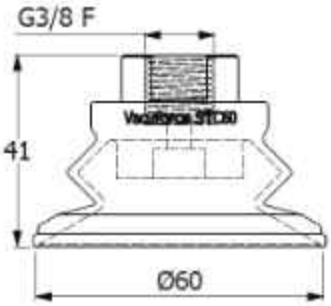

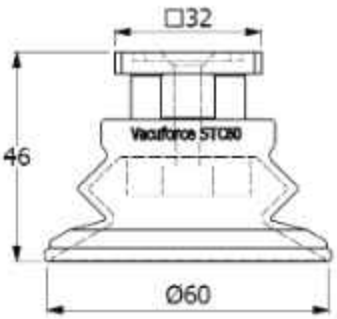

STC80 SINGLE BELLOWS TRACTION CUP

- 80mm Diameter single bellows traction cup
- Designed for steel stamping and glass handling industry
- Heavy duty construction offering superior cycle life
- Various machinery connection options



STC 80N - 60 - G3/8F

Series	Model	Diameter (mm)	Durometer	Thread
	80N	80	60	G1/4F
				G1/4M
				G3/8F
				M10M
				M14M
				RA

Part number example STC80N-60-G3/8F
80mm diameter bellows vacuum cup in 60 durometer NBR with G3/8 female thread connection port.

For cup material data please refer to vacuforce.com/materials

DIMENSIONS (mm)

G1/4 M

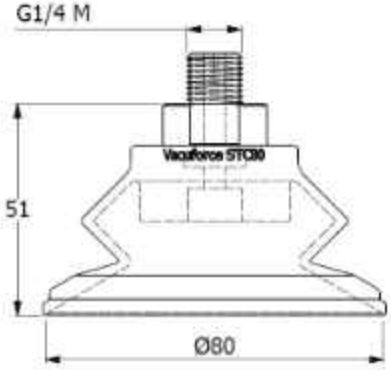

M10 M

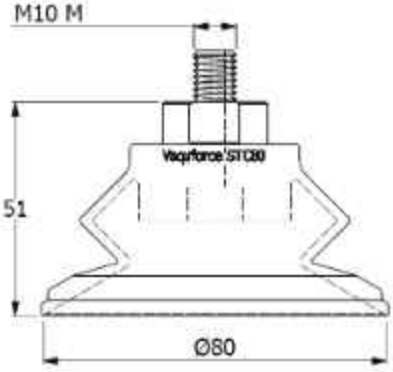

M14 M

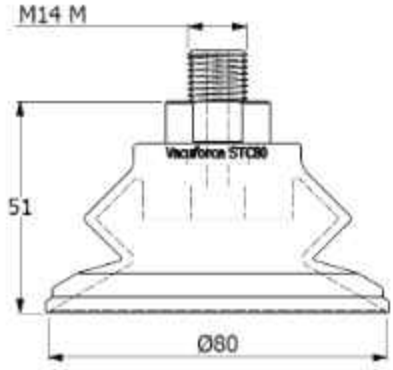

G1/4 F

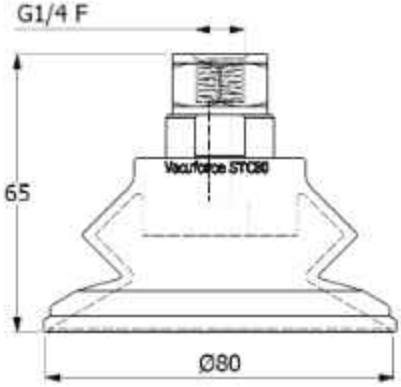

G3/8 F

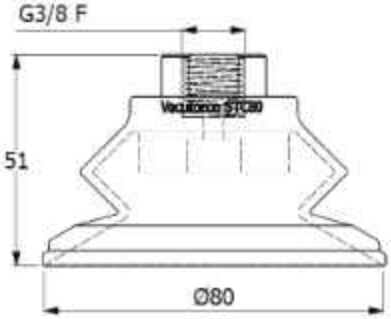

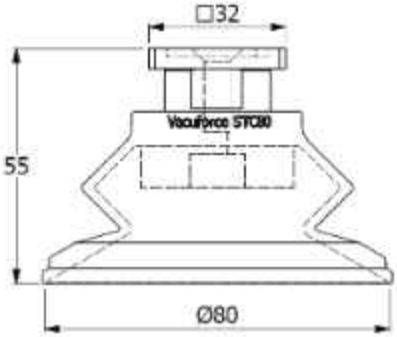

STC100 SINGLE BELLOWS TRACTION CUP

- 100mm Diameter single bellows traction cup
- Designed for steel stamping and glass handling industry
- Heavy duty construction offering superior cycle life
- Various machinery connection options



STC 100N - 60 - G3/8F

Series	Model	Diameter (mm)	Durometer	Thread
	100N	100	60	G1/4F
				G1/4M
				G3/8F
				M10M
				M14M
				RA

Part number example STC100N-60-G3/8F
100mm diameter bellows vacuum cup in 60 durometer NBR with G3/8 female thread connection port.

For cup material data please refer to vacuforce.com/materials

DIMENSIONS (mm)

G1/4 M

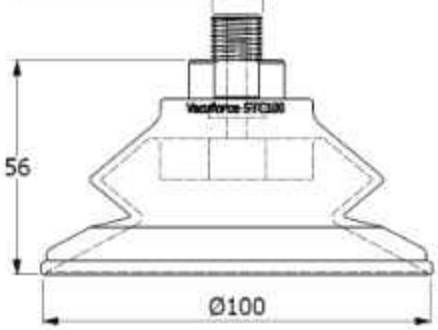

M10 M

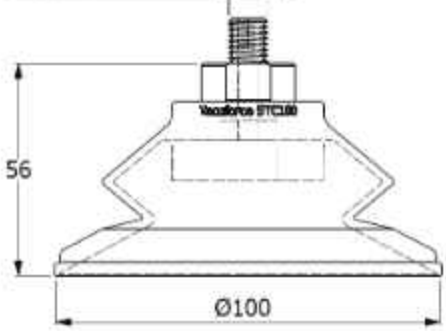

M14 M

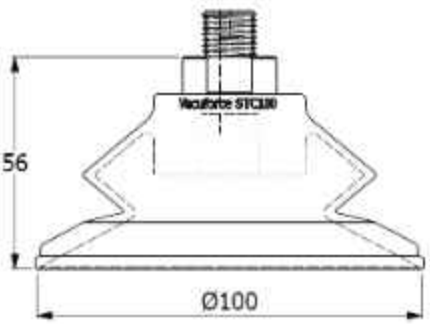

G1/4 F

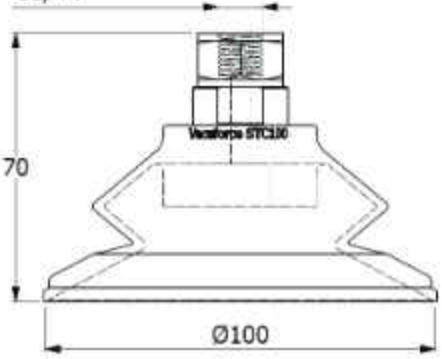

G3/8 F

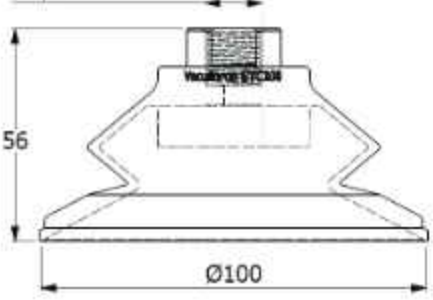

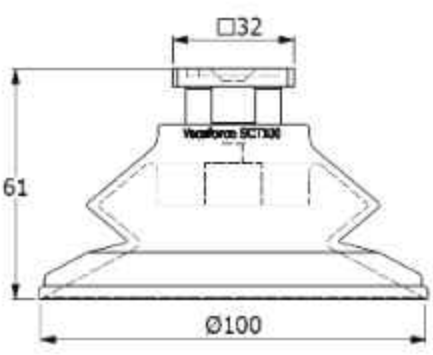

STC125 SINGLE BELLOWS TRACTION CUP

- 125mm Diameter single bellows traction cup
- Designed for steel stamping and glass handling industry
- Heavy duty construction offering superior cycle life
- Various machinery connection options



STC | **125N** – **60** – **G3/8F**

Series	Model	Diameter (mm)	Durometer	Thread
	125N	125	60	G1/4F
				G1/4M
				G3/8F
				M10M
				M14M
				RA

Part number example STC125N-60-G3/8F
125mm diameter bellows vacuum cup in 60 durometer NBR with G3/8 female thread connection port.

For cup material data please refer to vacuforce.com/materials

DIMENSIONS (mm)

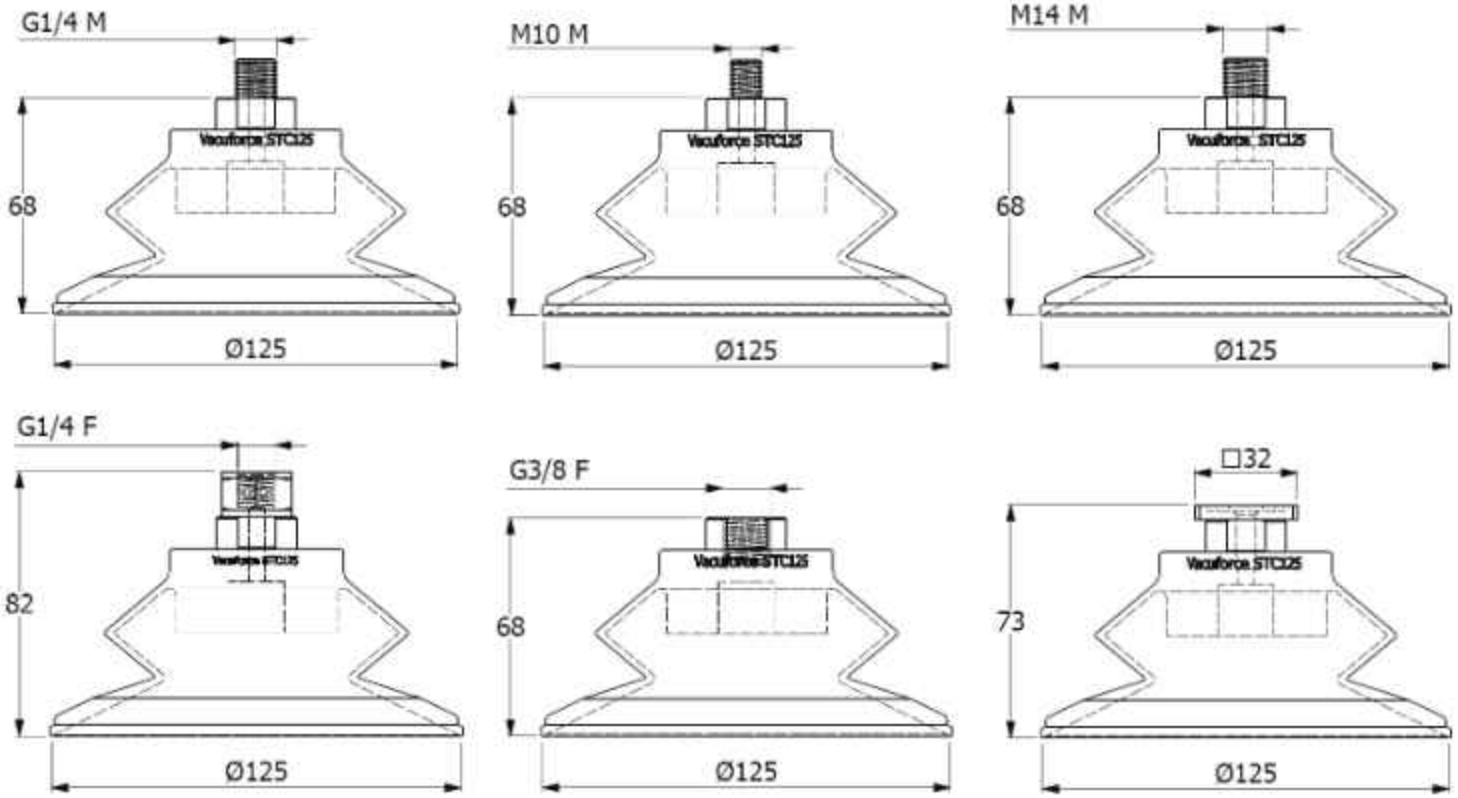

SBF POLYURETHANE BELLOWS TRACTION CUPS

The SBF series of vacuum cups are designed to offer the vacuum user a cup that can pick up on angled surfaces and adapt to products such as formed sheet steel that may have a tight radius. The cups include an aluminum male or female threaded fitting for machinery and vacuum source connection.

This cup is available as standard in POLYURETHANE which is a MARK FREE compound. It is as flexible as rubber but much harder wearing. Ideal for handling pressed steel sheet and glass products. Standard Durometer is 60 but other Durometer grades are available upon request.

The single bellows design offers slight vertical movement when vacuum is applied independent of the machinery aiding sheet separation and also compliance on concave and convex surfaces.



SBF - **80** - **PU** - **G3/8F**

Series
SBF

Model	Diameter (mm)
30	30
40	40
50	50
60	60
80	80
100	100

Material	
PU	Polyurethane

Thread
G1/4F
G1/4M
G3/8F
G3/8M
3/8NPSF

APPLICATIONS

- Automotive steel stamping
- Glass handling
- Plywood transfer
- Handling of oily steel surfaces
- Concave and convex surfaces
- Large box & carton handling

Part number example SBF60-PU-G3/8F 60mm diameter vacuum cup in polyurethane with G3/8 female thread.

LEVEL COMPENSATORS

Refer to page 1.33 for suitable level compensators for this vacuum cup range.



QUICK RELEASE FITTINGS



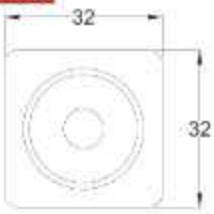

Model	T
QRG38	G3/8
QRN38	3/8NPSF

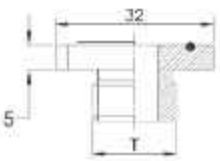

SBF30 PU BELLOWS CUP

- 30mm Diameter single bellows cup
- Designed for steel stamping and glass handling industry
- Heavy duty construction offering superior cycle life
- Non-marking polyurethane compound
- Various machinery connection options



SBF 30 - PU - 18F

Series	Model	Diameter
	30	30

Cup Material	
PU	Polyurethane

Fitting Thread	
18F	G1/8F
14F	G1/4F
14M	G1/4M
38F	G3/8F
RA	Quick Connector

For cup material data please refer to vacuforce.com/materials
Part number example SBF30-PU-38F - 30mm diameter polyurethane vacuum cup with G3/8 female fitting

DIMENSIONS (mm)

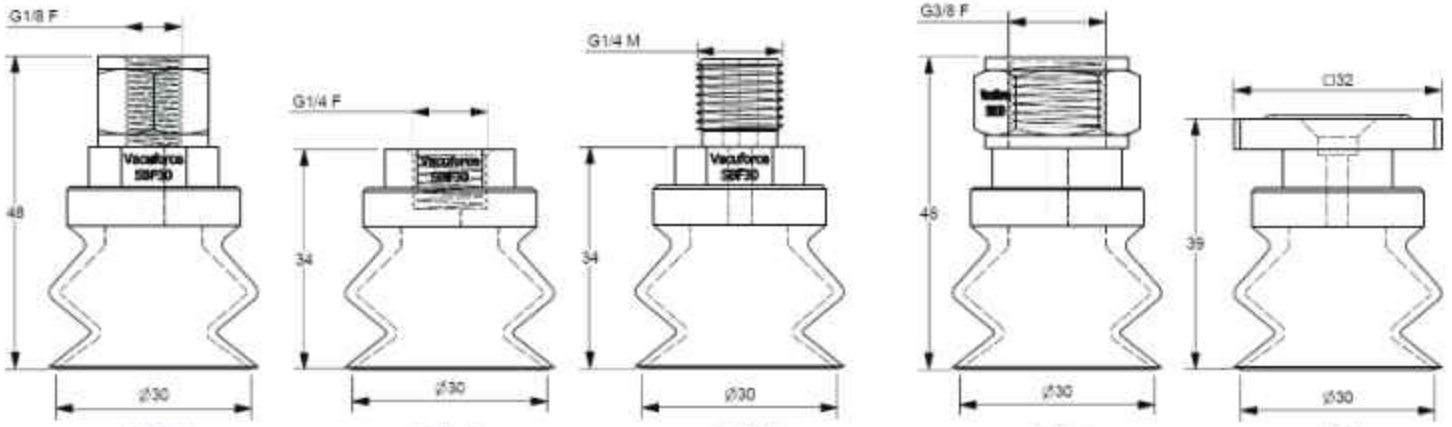

SBF40 PU BELLOWS CUP

- 40mm Diameter single bellows cup
- Designed for steel stamping and glass handling industry
- Heavy duty construction offering superior cycle life
- Non-marking polyurethane compound
- Various machinery connection options



SBF | **40** - **PU** - **18F**

Series	Model	Diameter
	40	40

Cup Material	
PU	Polyurethane

Fitting Thread	
18F	G1/8F
14F	G1/4F
14M	G1/4M
38F	G3/8F
RA	Quick Connector

For cup material data please refer to vacuforce.com/materials
Part number example SBF40-PU-38F - 40mm diameter polyurethane vacuum cup with G3/8 female fitting

DIMENSIONS (mm)

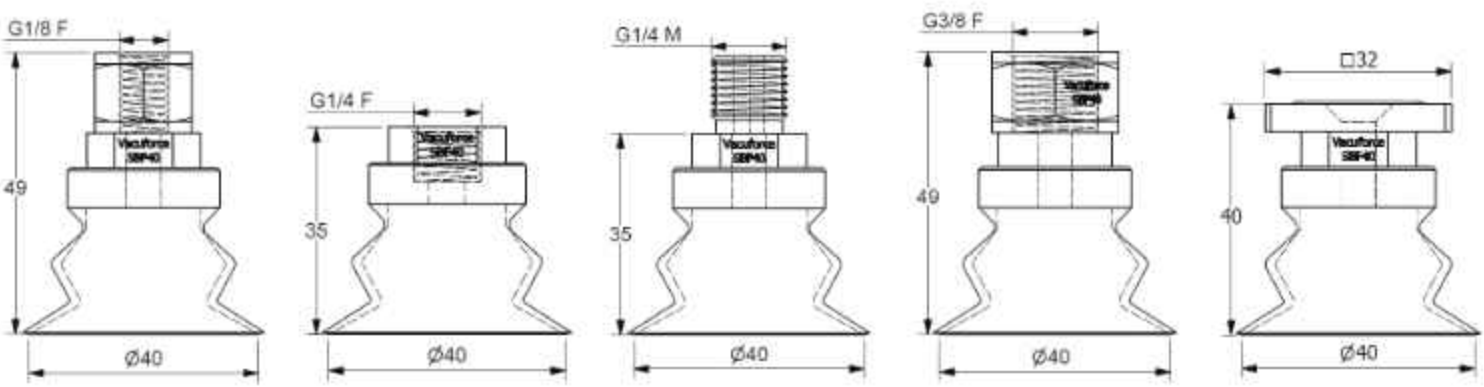

18F **14F** **14M** **38F** **RA**

SBF50 PU BELLOWS CUP

- 50mm Diameter single bellows cup
- Designed for steel stamping and glass handling industry
- Heavy duty construction offering superior cycle life
- Non-marking polyurethane compound
- Various machinery connection options



SBF 50 - PU - 18F

Series	Model	Diameter
	50	50

Cup Material	
PU	Polyurethane

Fitting Thread	
18F	G1/8F
14F	G1/4F
14M	G1/4M
38F	G3/8F
RA	Quick Connector

For cup material data please refer to vacuforce.com/materials
Part number example SBF50-PU-38F - 50mm diameter polyurethane vacuum cup with G3/8 female fitting

DIMENSIONS (mm)

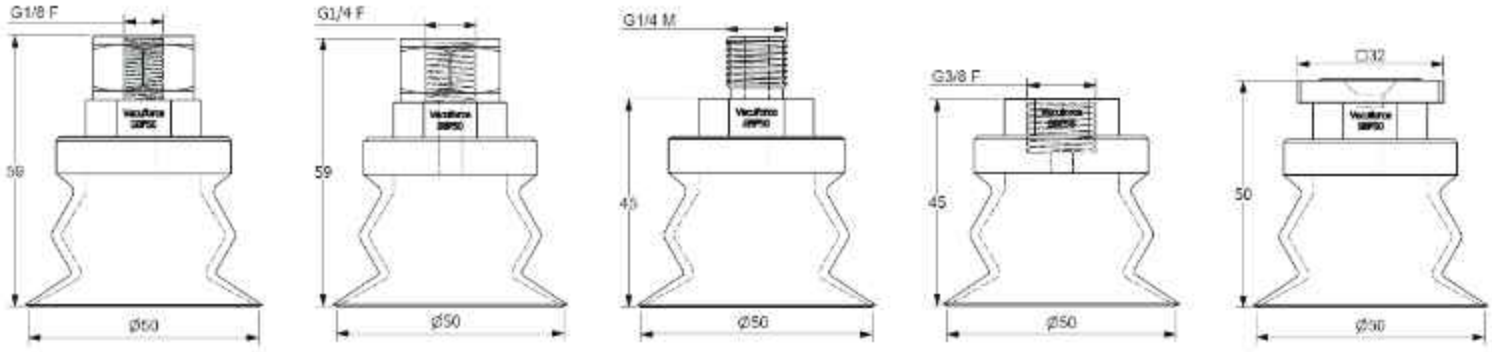

18F 14F 14M 38F RA

SBF60 PU BELLOWS CUP

- 60mm Diameter single bellows cup
- Designed for steel stamping and glass handling industry
- Heavy duty construction offering superior cycle life
- Non-marking polyurethane compound
- Various machinery connection options



SBF 60 - PU - 18F

Series	Model	Diameter
	60	60

Cup Material	
PU	Polyurethane

Fitting Thread	
18F	G1/8F
14F	G1/4F
14M	G1/4M
38F	G3/8F
RA	Quick Connector

For cup material data please refer to vacuforce.com/materials
Part number example SBF60-PU-38F - 60mm diameter polyurethane vacuum cup with G3/8 female fitting

DIMENSIONS (mm)

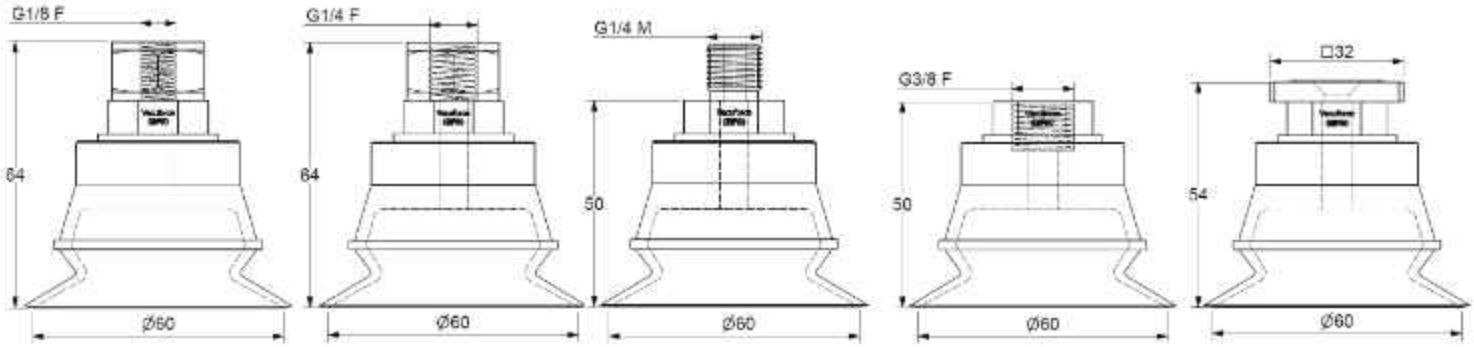

18F **14F** **14M** **38F** **RA**

SBF80 PU BELLOWS CUP

- 80mm Diameter single bellows cup
- Designed for steel stamping and glass handling industry
- Heavy duty construction offering superior cycle life
- Non-marking polyurethane compound
- Various machinery connection options



SBF 80 - PU - 18F

Series	Model	Diameter
	80	80

Cup Material	
PU	Polyurethane

Fitting Thread	
18F	G1/8F
14F	G1/4F
14M	G1/4M
38F	G3/8F
RA	Quick Connector

For cup material data please refer to vacuforce.com/materials
Part number example SBF80-PU-38F - 80mm diameter polyurethane vacuum cup with G3/8 female fitting

DIMENSIONS (mm)

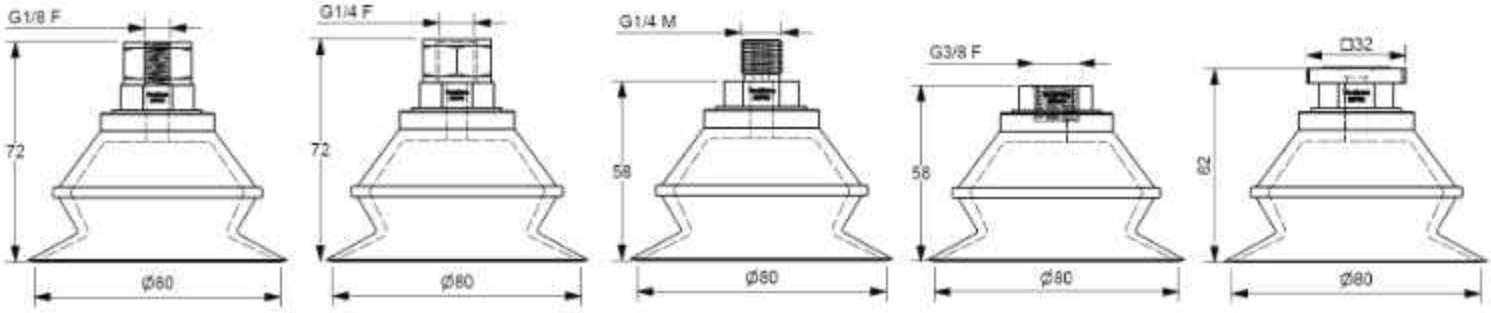

18F 14F 14M 38F RA

SBF100 PU BELLOWS CUP

- 100mm Diameter single bellows cup
- Designed for steel stamping and glass handling industry
- Heavy duty construction offering superior cycle life
- Non-marking polyurethane compound
- Various machinery connection options



SBF 100 – PU – 18F

Series	Model	Diameter
	100	100

Cup Material	
PU	Polyurethane

Fitting Thread	
18F	G1/8F
14F	G1/4F
14M	G1/4M
38F	G3/8F
RA	Quick Connector

For cup material data please refer to vacuforce.com/materials

Part number example SBF100-PU-38F - 100mm diameter polyurethane vacuum cup with G3/8 female fitting

DIMENSIONS (mm)

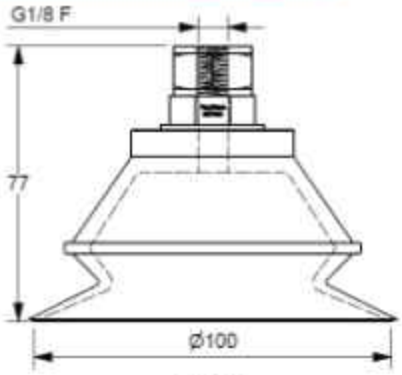

18F

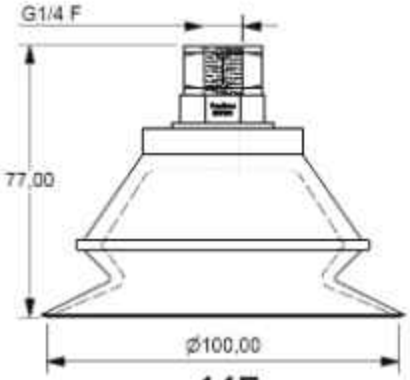

14F

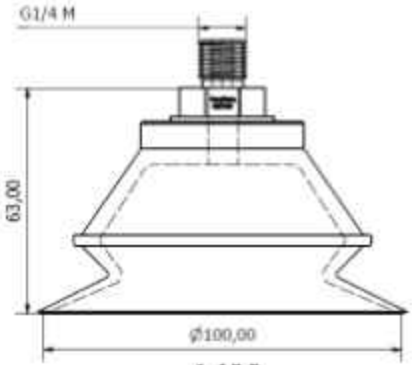

14M

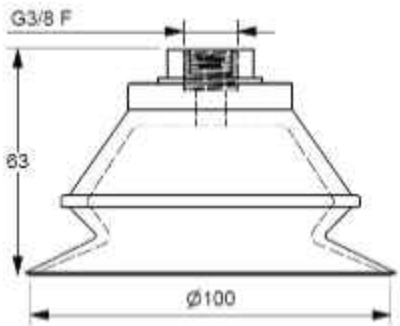

38F

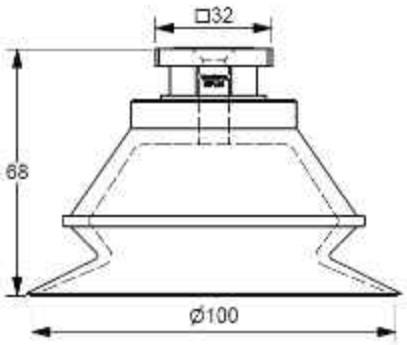

RA

SOB OVAL BELLOWS CUP

The SOB series of vacuum cups are designed to offer the vacuum user a cup that can pick up on narrow surfaces and adapt to products such as formed sheet steel.

The cups include an aluminum male or female threaded fitting for machinery and vacuum source connection.

This cup is available in Nitrile rubber in both 45 and 60 Durometer. Ideal for handling pressed steel sheet and glass products.

The single bellows design offers slight vertical movement when vacuum is applied independent of the machinery aiding sheet separation and also compliance on concave and convex surfaces.



SOB **30X60N** - **60** - **G3/8F**

Series	Model	L x W (mm)	Durometer	Thread
	30X60N	30 x 60	60	G1/4F
	40X80N	40 x 80		G1/4M
	55X110N	55 x 110		G3/8F
	70X140N	70 x 140		3/8NPSF
				M10M
				M14M

Part number example SOB30X60N-60-G3/8F
30mm x 60mm Oval Bellows Cup 60 Durometer with a G3/8 female threaded fitting.

LEVEL COMPENSATORS

Refer to page 1.33 for suitable level compensators for this vacuum cup range.



QUICK RELEASE FITTINGS



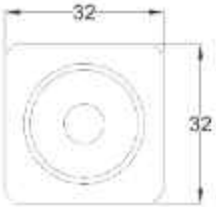

Model	T
QRG38	G3/8
QRN38	3/8NPSF

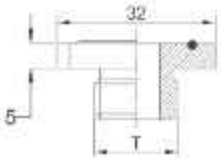

SOB30X60 OVAL BELLOWS CUP

- 30mm x 60mm single bellows oval cup
- Designed for steel stamping and glass handling industry
- Heavy duty construction offering superior cycle life
- Various machinery connection options



SOB | **30X60N** – **60** – **G3/8F**

Series	Model	L x W (mm)
	30X60N	30 x 60

Durometer
60

Thread
G1/4F
G1/4M
G3/8F
M10M
M14M
RA

Part number example SOB30X60N-60-G3/8F
30mm x 60mm single bellows oval cup in 60 durometer NBR with G3/8 female thread connection port.

For cup material data please refer to vacuforce.com/materials

DIMENSIONS (mm)

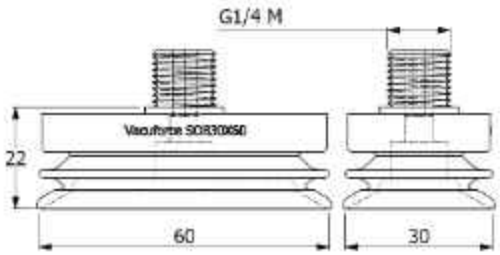

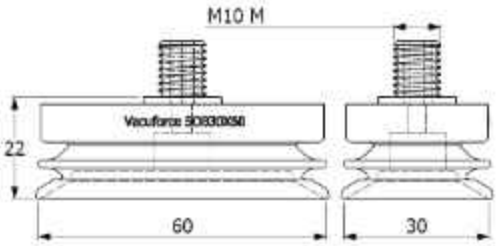

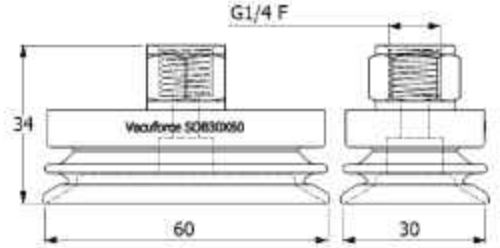

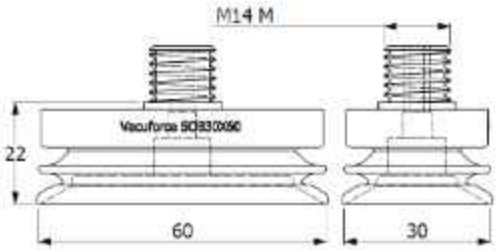

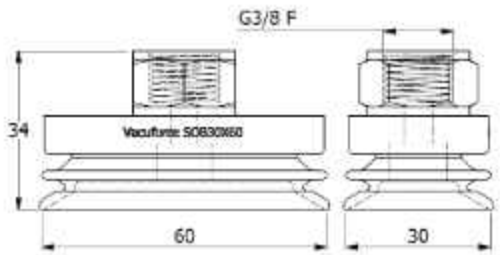

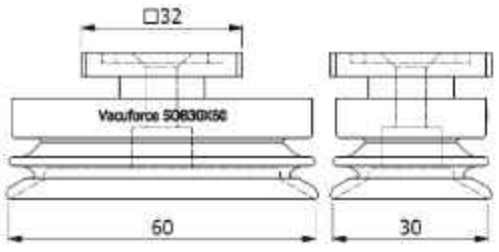

SOB40X80 OVAL BELLOWS CUP

- 40mm x 80mm single bellows oval cup
- Designed for steel stamping and glass handling industry
- Heavy duty construction offering superior cycle life
- Various machinery connection options



SOB | **40X80N** – **60** – **G3/8F**

Series	Model	L x W (mm)
	40X80N	40 x 80

Durometer
60

Thread
G1/4F
G1/4M
G3/8F
M10M
M14M
RA

Part number example SOB40X80N-60-G3/8F
40mm x 80mm single bellows oval cup in 60 durometer NBR with G3/8 female thread connection port.

For cup material data please refer to vacuforce.com/materials

DIMENSIONS (mm)

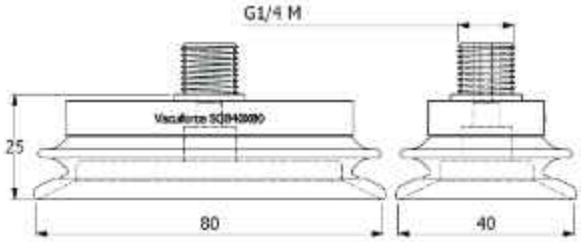

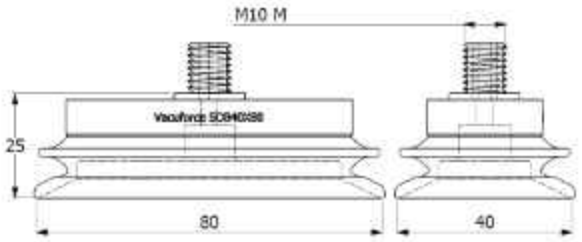

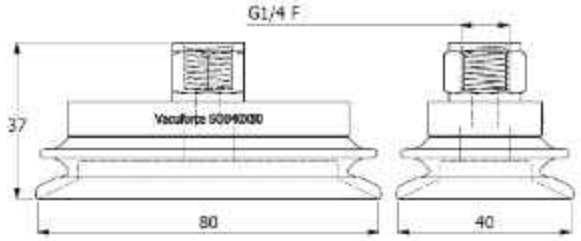

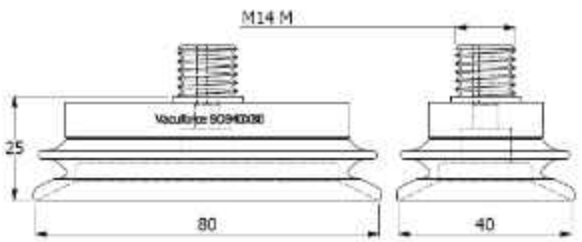

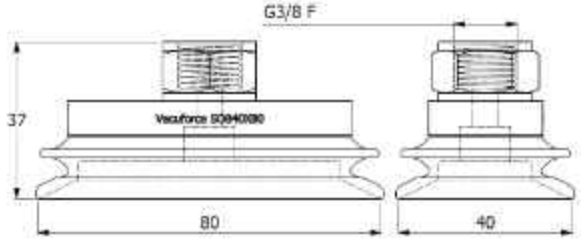

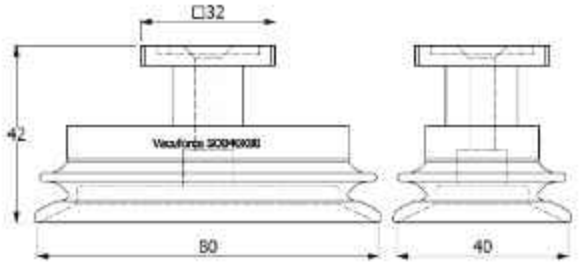

SOB55X110 OVAL BELLOWS CUP

- 55mm x 110mm single bellows oval cup
- Designed for steel stamping and glass handling industry
- Heavy duty construction offering superior cycle life
- Various machinery connection options



SOB | **55X110N** – **60** – **G3/8F**

Series	Model	L x W (mm)
	55X110N	55 x 110

Durometer
60

Thread
G1/4F
G1/4M
G3/8F
M10M
M14M
RA

Part number example SOB55X110N-60-G3/8F
55mm x 110mm single bellows oval cup in 60 durometer NBR with G3/8 female thread connection port.

For cup material data please refer to vacuforce.com/materials

DIMENSIONS (mm)

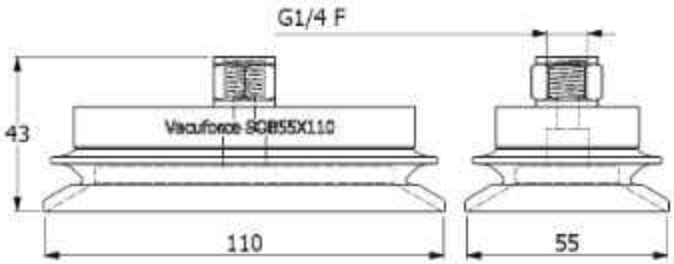

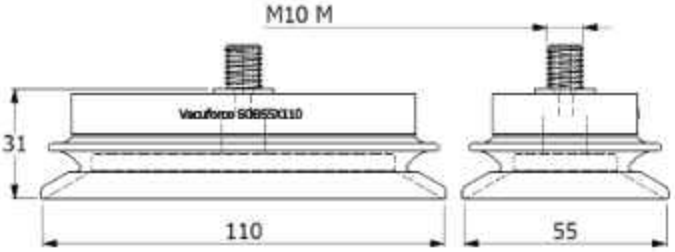

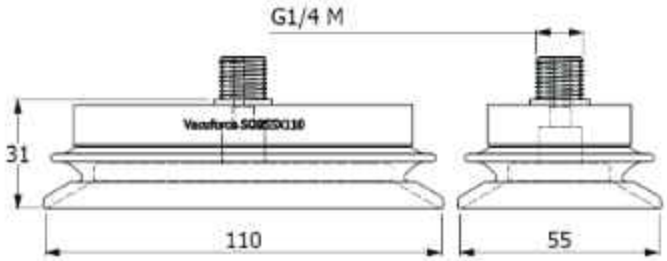

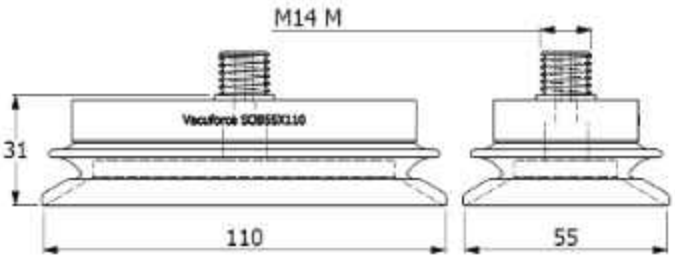

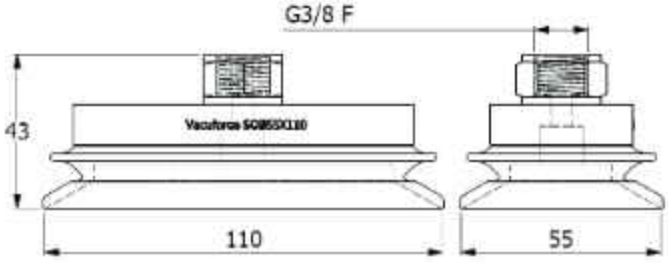

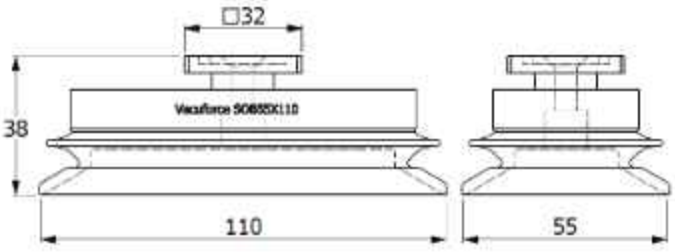

SOB70X140 OVAL BELLOWS CUP

- 70mm x 140mm single bellows oval cup
- Designed for steel stamping and glass handling industry
- Heavy duty construction offering superior cycle life
- Various machinery connection options



SOB 70X140N – 60 – G3/8F

Series	Model	L x W (mm)
SOB	70X140N	70 x 140

Durometer
60

Thread
G1/4F
G1/4M
G3/8F
M10M
M14M
RA

Part number example SOB70X140N-60-G3/8F
70mm x 140mm single bellows oval cup in 60 durometer NBR with G3/8 female thread connection port.

For cup material data please refer to vacuforce.com/materials

DIMENSIONS (mm)

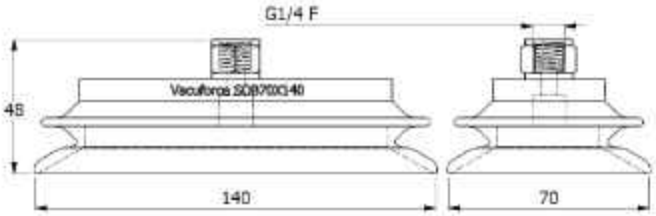

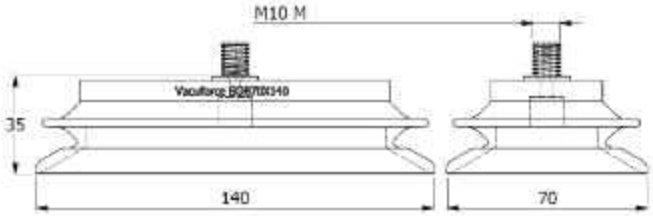

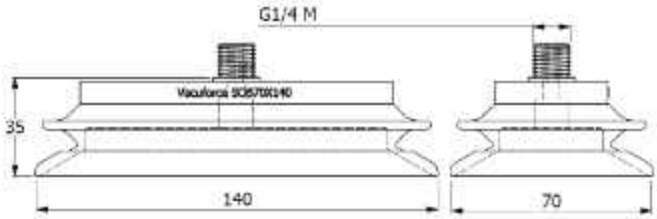

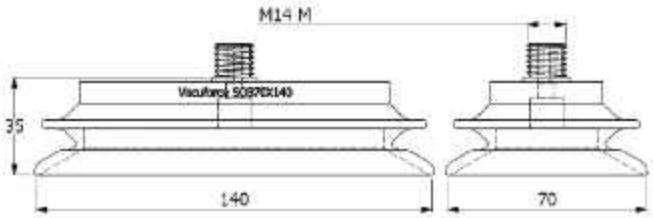

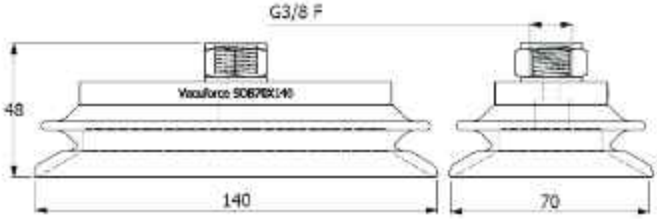

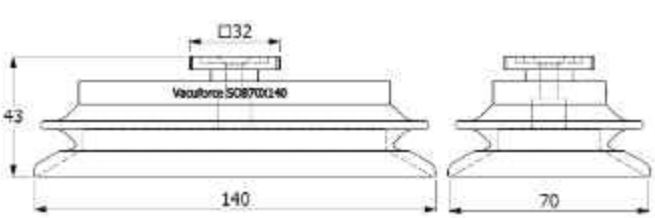

EHC EGG HANDLING CUPS

- Egg handling vacuum cups
- Available in FDA silicone as standard
- Multiple bellows offers vacuum lift independent of machine movement



EHC | **3475** | **N**

Series
EHC

Model	Diameter
3475	34
3566	35
3776	37

Cup Material	
N	NBR Black 50 Durometer
S	Silicone White 30 Durometer
SBLK	Silicone Black 50 Durometer
SR	Silicone Red 50 Durometer
SBLU	Silicone Blue 50 Durometer

Part number example EHC3475N
34mm Egg Handling Cup in NBR

Note - #3566 only available in Blue Silicone
#3766 only available in Red Silicone

DIMENSIONS (mm)

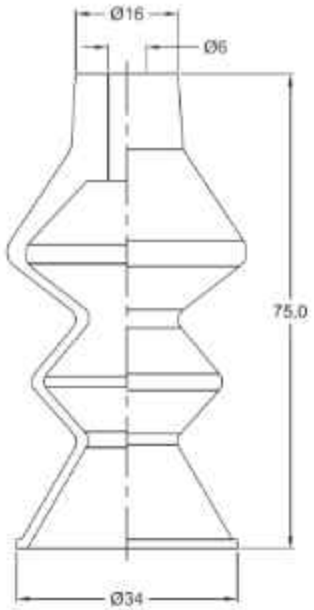

Model 3475

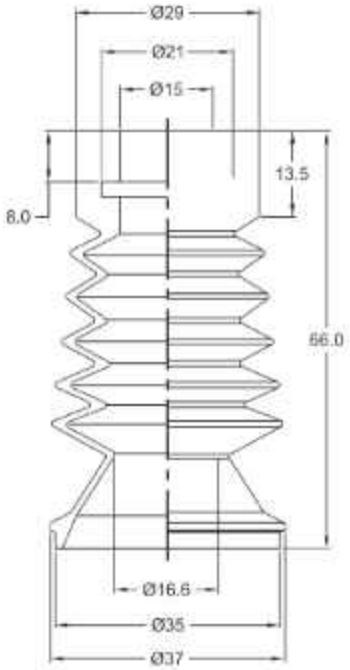

Model 3566

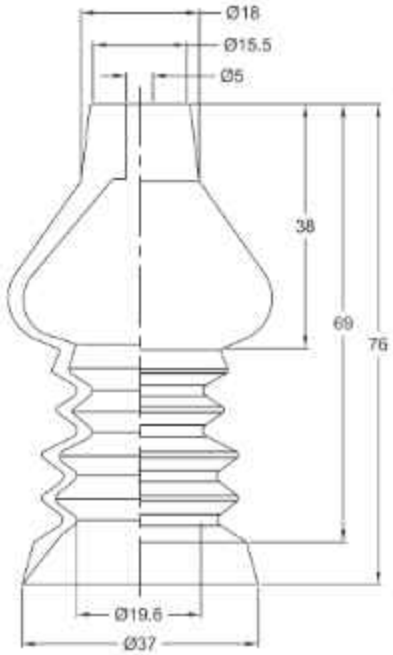

Model 3776



This cup series is available in metal detectable FDA compliant silicone.

For red colored metal detectable silicone use material code SMI.

For white translucent metal detectable silicone use material code STMI.

FCR FOAM CUP RINGS

- Foam seal lips for VFB series vacuum cups
- Used for handling rough or embossed surfaces
- Self adhesive seal bonds to base of VFB series vacuum cups



FCR	30	S

Series	Model	Suitable for Cup Model
	20	VFB20
	30	VFB30-2
	40	VFB40
	50	VFB50-2

Seal Material	
N	NBR
S	Silicone

ASSEMBLY



Ensure that the vacuum cup is free from dirt and grease on the sealing lip and is in good overall condition. Remove the self adhesive seal from the foam ring and place on a flat surface with sticky face upwards.

Place cup centrally over foam ring and press against the foam ring squarely and firmly for 1-2 seconds.

DIMENSIONS (mm)

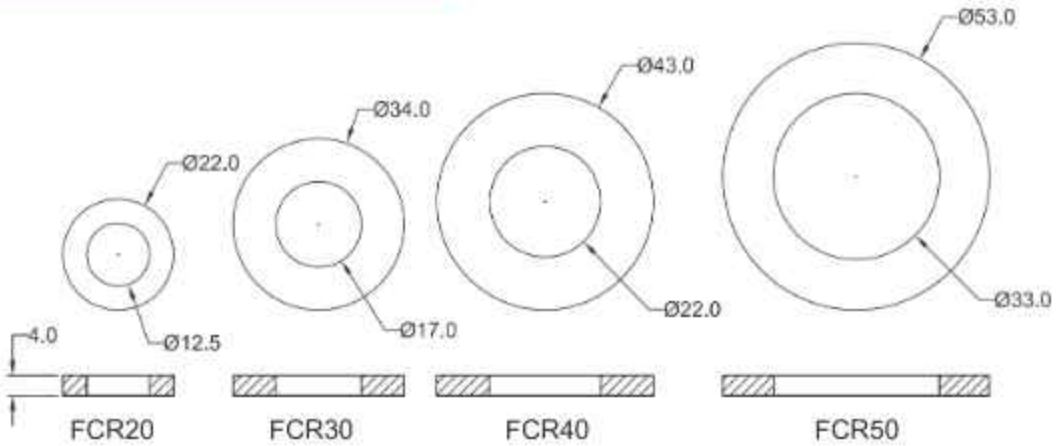

For larger foam cups please refer to pages 1.30 - 1.32



VFF FLAT CUPS

- Flat design vacuum cup
- Internal cleats for increased grip in lateral movement
- Good for shear movement and grip
- Available from 15mm to 150mm diameter
- NBR and FDA Silicone



VFF | **40-2** | **N**

Series
VFF

Model	Diameter
15	15
20	20
30-2	30
40-2	40
50-2	50
75W	75
110W	110
150W	150

Cup Material	
N	Nitrile
S	Red Silicone
ST	White Translucent Silicone

For cup material data please refer to vacuforce.com/materials

Part number example VFF30-2S 30mm diameter flat vacuum cup in red silicone

LEVEL COMPENSATORS

Refer to page 1.33 for suitable level compensators for this vacuum cup range.





For cup fittings refer to page 1.86

VFF15 FLAT VACUUM CUP

- 16mm Diameter (0.787") flat cup design
- Internal cleats for increased grip in lateral movement
- Good for shear movement and grip
- NBR and FDA Silicone materials





APPLICATIONS

- Small part pick and place
- Plastic and food packaging
- Direct food contact with silicone materia

DIMENSIONS (mm)

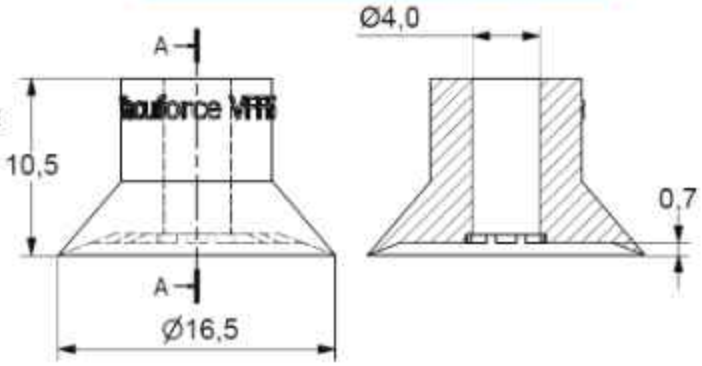

VFF	15	S
Series	Model / Diameter	Cup Material

Model	Diameter
15	16.5

Cup Material	
N	Nitrile
S	Red Silicone

Cup Fittings	
Use Fitting Type	B

For cup material data please refer to vacuforce.com/materials

Part number example VFF15S
16.5mm diameter flat vacuum cup in red silicone



For cup fittings
refer to page 1.86

VFF20 FLAT VACUUM CUP

- 22mm Diameter (0.866") flat cup design
- Internal cleats for increased grip in lateral movement
- Good for shear movement and grip
- NBR and FDA Silicone materials







APPLICATIONS

- Small part pick and place
- Plastic and food packaging
- Direct food contact with silicone materials

DIMENSIONS (mm)

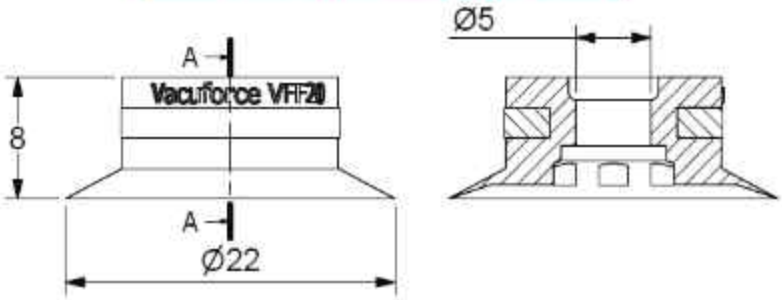

VFF	20		S	
Series	Model	Diameter	Cup Material	
	20	22	N	Nitrile
			S	Red Silicone
			ST	White Translucent Silicone

Cup Fittings	
Use Fitting Type	C

For cup material data please refer to vacuforce.com/materials

Part number example VFF20S
22mm diameter flat vacuum cup in red silicone



For cup fittings
refer to page 1.86

VFF30-2 FLAT VACUUM CUP

- 32mm Diameter (1.26") flat cup design
- Internal cleats for increased grip in lateral movement
- Good for shear movement and grip
- NBR and FDA Silicone materials





APPLICATIONS

- Small part pick and place
- Plastic and food packaging
- Direct food contact with silicone materials

DIMENSIONS (mm)

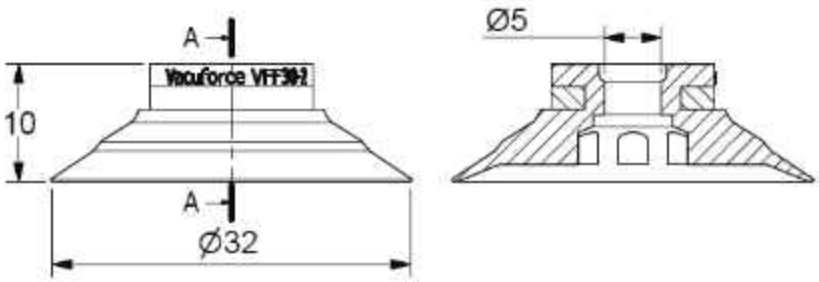

VFF	30-2		S	
Series	Model	Diameter	Cup Material	
	30	32	N	Nitrile
			S	Red Silicone
			ST	White Translucent Silicone

Cup Fittings	
Use Fitting Type	C

For cup material data please refer to vacuforce.com/materials

Part number example VFF30-2S
32mm diameter flat vacuum cup in red silicone



For cup fittings
refer to page 1.86

VFF40-2 FLAT VACUUM CUP

- 42mm Diameter (1.65") flat cup design
- Internal cleats for increased grip in lateral movement
- Good for shear movement and grip
- NBR and FDA Silicone materials



APPLICATIONS

- Small part pick and place
- Plastic and food packaging
- Direct food contact with silicone materials

DIMENSIONS (mm)

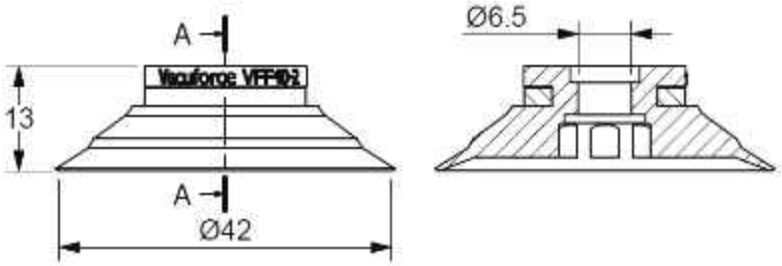

VFF	40-2		S	
Series	Model	Diameter	Cup Material	
	40-2	42	N	Nitrile
			S	Red Silicone
			ST	White Translucent Silicone

Cup Fittings	
Use Fitting Type	D

For cup material data please refer to vacuforce.com/materials

Part number example VFF40-2S
42mm diameter flat vacuum cup in red silicone



For cup fittings
refer to page 1.86

VFF50-2 FLAT VACUUM CUP

- 52mm Diameter (2.05") flat cup design
- Internal cleats for increased grip in lateral movement
- Good for shear movement and grip
- NBR and FDA Silicone materials



APPLICATIONS

- Small part pick and place
- Plastic and food packaging
- Direct food contact with silicone materials

DIMENSIONS (mm)

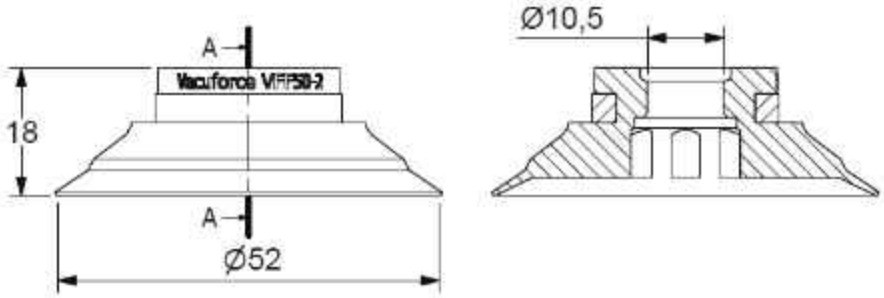

VFF	50-2		S	
Series	Model	Diameter	Cup Material	
	50	52	N	Nitrile
			S	Red Silicone
			ST	White Translucent Silicone

Cup Fittings	
Use Fitting Type	E



For cup fittings refer to page 1.86

For cup material data please refer to vacuforce.com/materials

Part number example VFF50-2S
52mm diameter flat vacuum cup in red silicone

VFF75W FLAT VACUUM CUP

- 75mm Diameter (3") flat cup design
- Internal cleats for increased grip in lateral movement
- Ideal for high speed shear movement and grip
- NBR and FDA Silicone materials





APPLICATIONS

- Part pick and place
- Sheet metal and lumber handling
- High shear force pick and place

DIMENSIONS (mm)

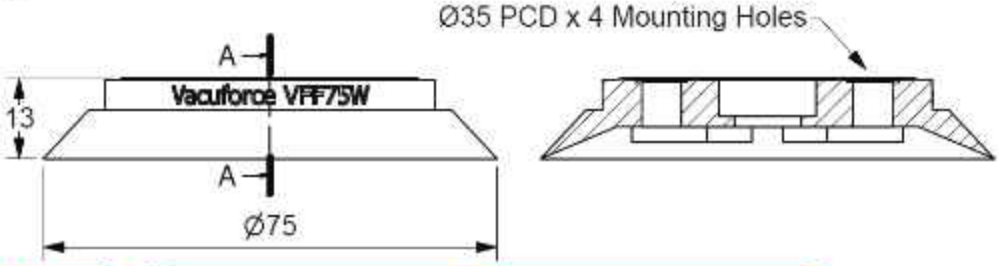

VFF	75W	S
Series	Model / Diameter	Cup Material
	75W / 75	N: Nitrile
		S: Red Silicone

For cup material data please refer to vacuforce.com/materials

Part number example VFF75WS - 75mm diameter flat vacuum cup in red silicone

VFF75W Cup Fittings



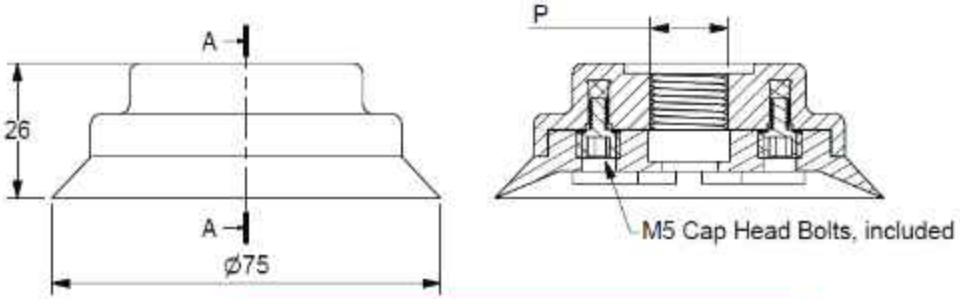

Fitting Model	P (Vacuum Port)
VFCF75-1/8	G1/8
VFCF75-1/4	G1/4
VFCF75-3/8	G3/8

VFF110W FLAT VACUUM CUP

- 112mm Diameter (4.4") flat cup design
- Internal cleats for increased grip in lateral movement
- Ideal for high speed shear movement and grip
- NBR and FDA Silicone materials

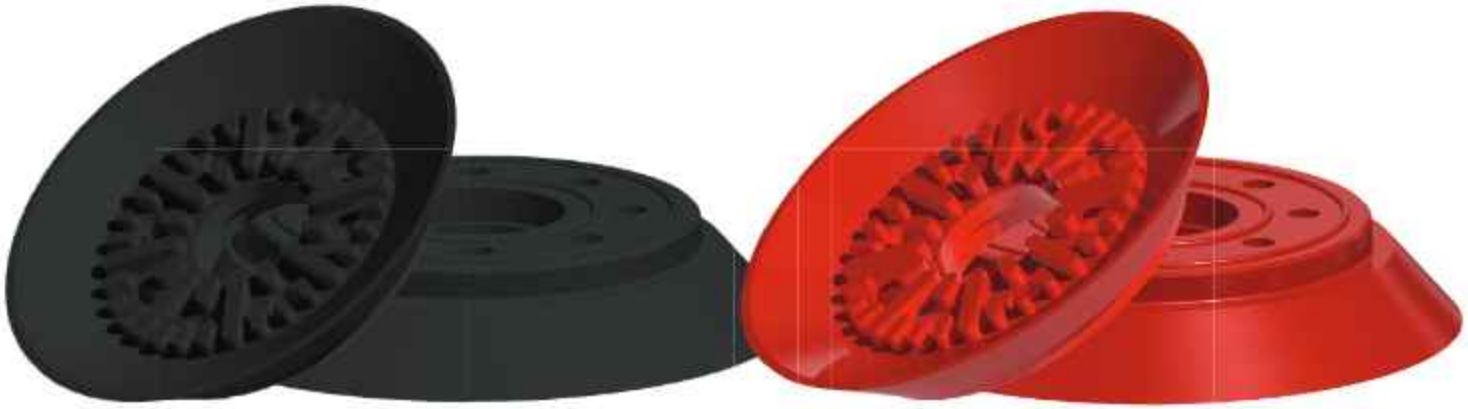

APPLICATIONS

- Part pick and place
- Sheet metal and lumber handling
- High shear force pick and pla

DIMENSIONS (mm)

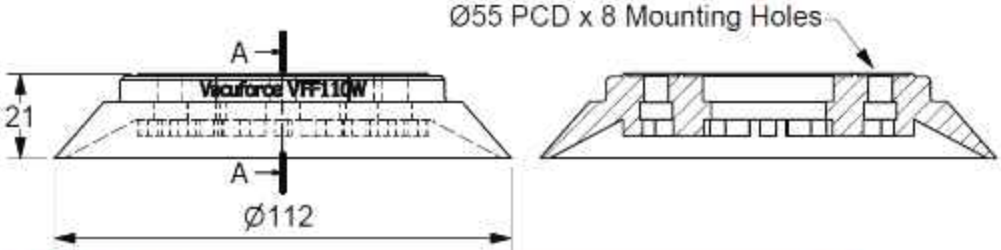

VFF	110W		S	
Series	Model	Diameter	Cup Material	
	110W	112	N	Nitrile
			S	Red Silicone

For cup material data please refer to vacuforce.com/materials

Part number example VFF110WS - 112mm diameter flat vacuum cup in red silicone

VFF110W Cup Fittings



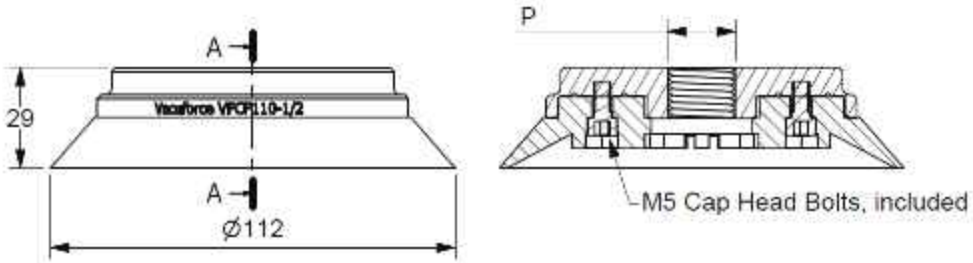

Fitting Model	P (Vacuum Port)
VFCF110-3/8	G3/8
VFCF110-1/2	G1/2

VFF150W FLAT VACUUM CUP

- 154mm Diameter (6.06") flat cup design
- Internal cleats for increased grip in lateral movement
- Ideal for high speed shear movement and grip
- NBR and FDA Silicone materials

APPLICATIONS

- Part pick and place
- Sheet metal and lumber handling
- High shear force pick and place



DIMENSIONS (mm)

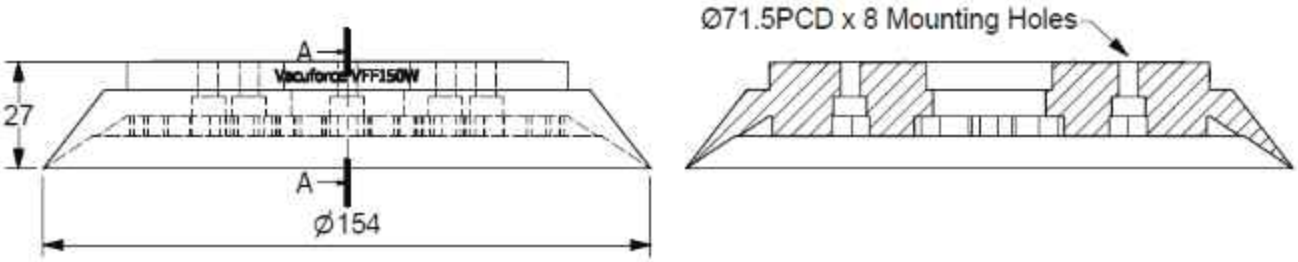

VFF	150W	S
Series	Model: 150W	Diameter: 154

Cup Material	
N	Nitrile
S	Red Silicone

For cup material data please refer to vacuforce.com/materials

Part number example VFF150WS - 154mm diameter flat vacuum cup in red silicone

VFF150W Cup Fittings



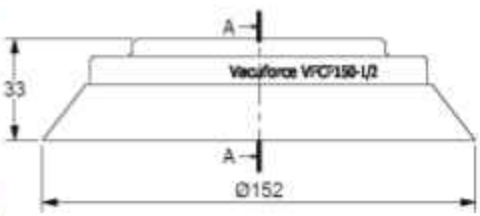

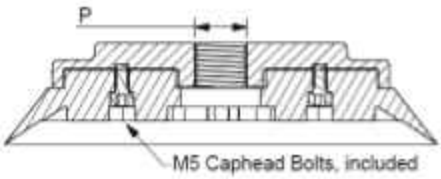

Fitting Model	P (Vacuum Port)
VFCF150-1/2	G1/2

VFF200N FLAT VACUUM CUP

- 200mm Diameter (8"") flat cup design
- Internal cleats for increased grip in lateral movement
- Ideal for high speed shear movement and grip
- NBR material

APPLICATIONS

- Part pick and place
- Sheet metal and lumber handling
- High shear force pick and place



DIMENSIONS (mm)

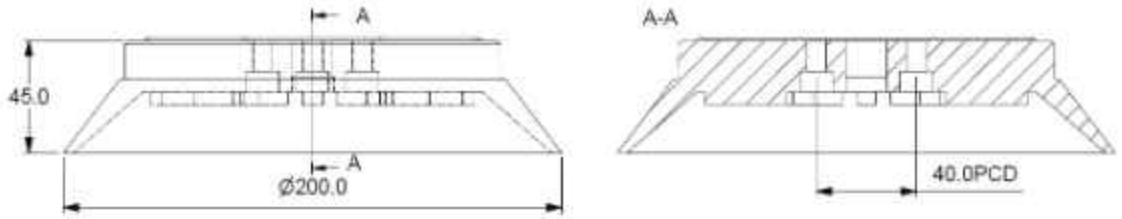

VFF	200		N	
Series	Model	Diameter	Cup Material	
	200	200	N	Nitrile

For cup material data please refer to vacuforce.com/materials
Part number example VFF200N - 200mm diameter flat vacuum cup in NBR rubber

VFF200N Cup Fittings



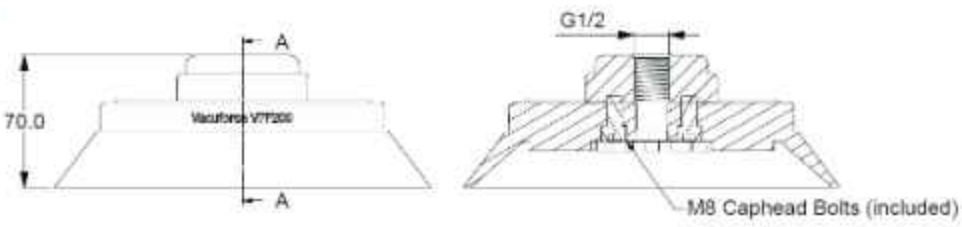

Fitting Model	P (Vacuum Port)
VFCF200-1/2	G1/2

PFG FLAT VACUUM CUPS

- Flat design vacuum cup
- Good for shear movement and grip
- Available from 2mm to 50mm diameter
- NBR and Silicone



PFG – **50** – **NBR**

Series

Model	Diameter (mm)
2	2
3.5	3.5
5	5
6	6
8	8
20	20
25	25
30	30
35	35
40	40
50	50

Cup Material	
NBR	Nitrile
SI	White Silicone

For cup material data please refer to vacuforce.com/materials

Part number example PFG-50-NBR 50mm diameter flat vacuum cup in NBR rubber.

PFG-2-*



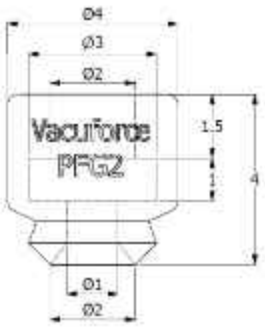

PFG-3.5-*



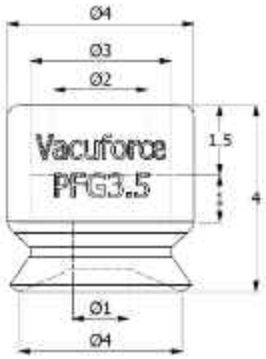

PFG-5-*





PFG-6-*



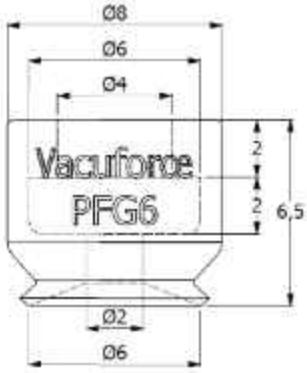

PFG-8-*





PFG-10-*



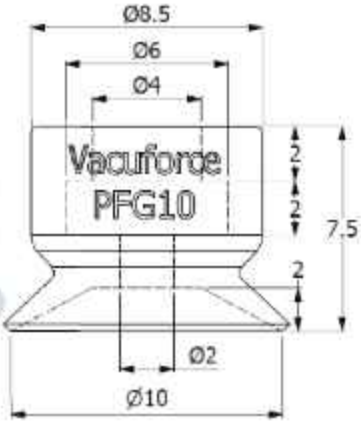

PFG-15-*



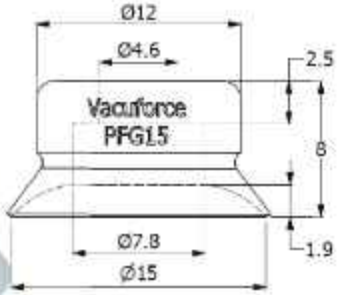

PFG-20-*



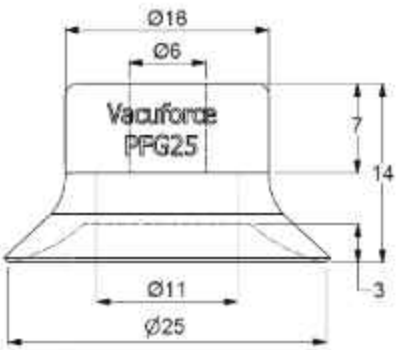

PFG FLAT VACUUM CUPS

PFG-30-*





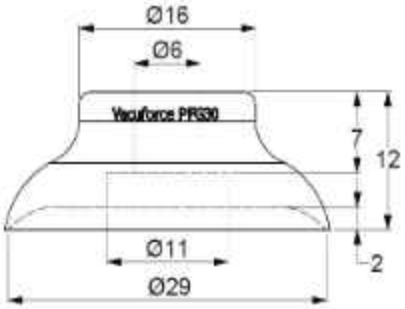

PFG-35-*





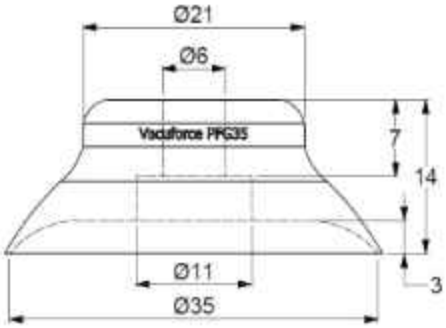

PFG-40-*



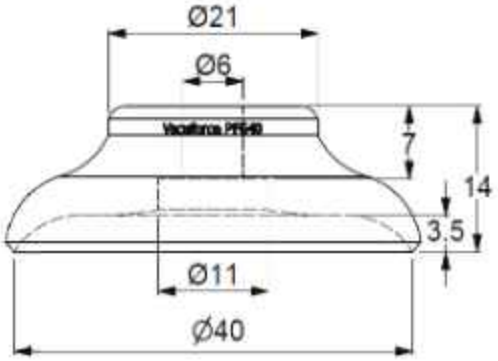

PFG-50-*

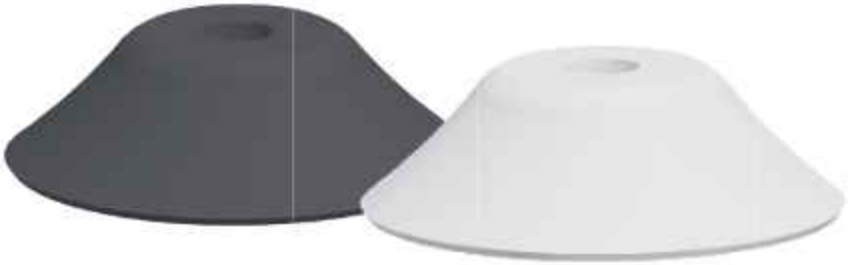

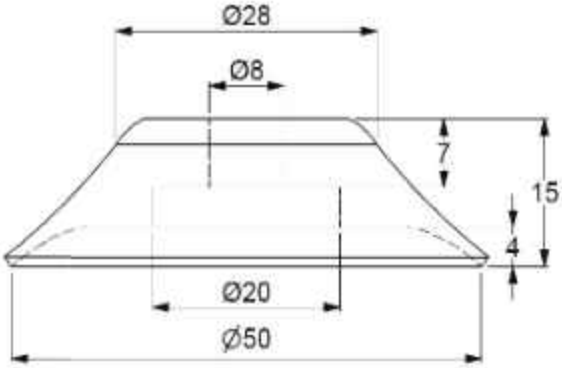

STP SERIES SUPER THIN LIP

- Ultra thin 0.25mm thick pick up sealing lip
- 60mm Diameter
- Designed to seal against thin packaged products a bags
- Inner support ribs enable high speed transfer of products



APPLICATIONS

- Part pick and place
- Plastic wrapped food packaging
- Bags and sacks

DIMENSIONS (mm)

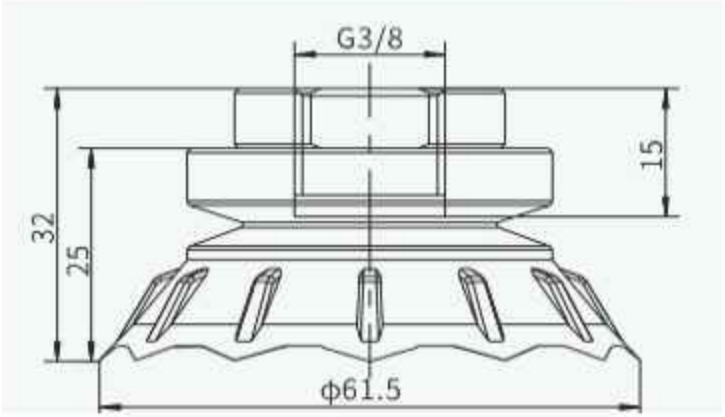

STP	60		S	
Series	Model	Diameter	Cup Material	
	60	60	S	Red Silicone

For cup material data please refer to vacuforce.com/materials

SFF FLAT CUPS

The SFF series of vacuum cups are designed to offer the vacuum user very high speed lateral transfer especially on wet or oily surfaces such as steel stamped parts.

The SFF cups are also suitable for shear plane applications where the part is being turned through 90 degrees. The cups include an aluminum male or female threaded fitting for machinery and vacuum source connection.

These vacuum cups are available in 45 and 60 Durometer NBR.





APPLICATIONS

- Automotive steel stamping
- Glass handling
- Plywood transfer
- Handling of oily steel surfaces
- Large box & carton handling

SFF	80	N	-	60	-	G3/8F
Series	Diameter (mm)	Material		Durometer		Thread
	30	N NBR		45		G1/4F
	40			60		G1/4M
	50					G3/8F
	60					3/8NPSF
	80					M10M
	100					M14M
	125					

Part number example SFF80N-60-G3/8F
80mm diameter flat cup 60 Durometer NBR with G3/8 female thread

LEVEL COMPENSATORS

Refer to page 1.33 for suitable level compensators for this vacuum cup range.



QUICK RELEASE FITTINGS



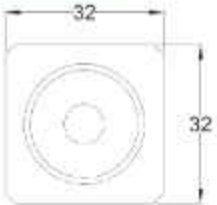

Model	T
QRG38	G3/8
QRN38	3/8NPSF

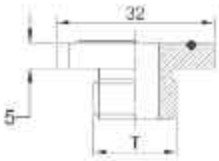

SFF30 FLAT CUPS

- 30mm Diameter single bellows cup
- Available in 45 and 60 durometer NBR
- Designed for steel stamping and glass handling industry
- Heavy duty construction offering superior cycle life
- Non-marking polyurethane compound
- Various machinery connection options

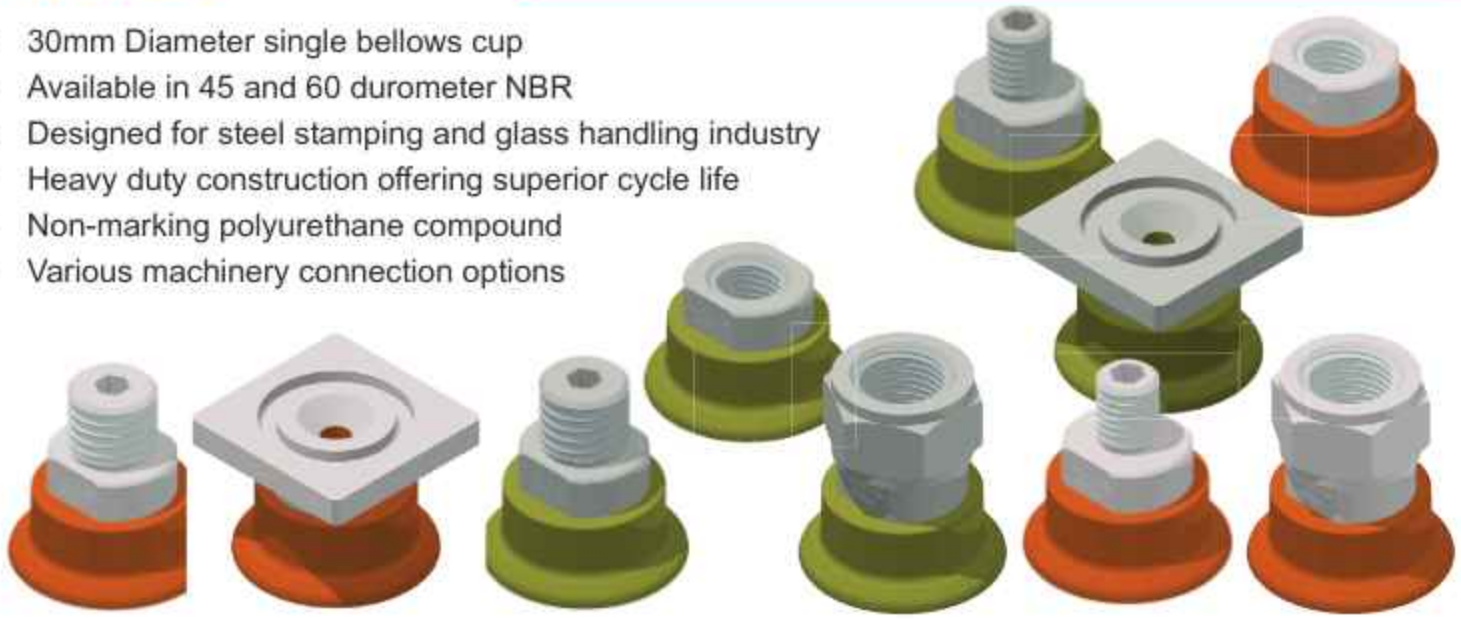

SFF	30	N	-	60	-	G3/8F
Series	Diameter (mm)	Material		Durometer		Thread
	30	N NBR		45 (green)		G1/4F
				60 (orange)		G1/4M
						G3/8F
						M10M
						M14M
						RA

For cup material data please refer to vacuforce.com/materials
Part number example SFF30N-60-G3/8F - 30mm diameter 60 durometer NBR rubber vacuum cup with G3/8 female fitting

DIMENSIONS (mm)

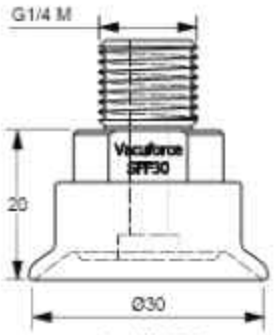

G1/4M

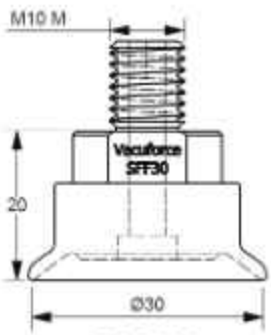

M10M

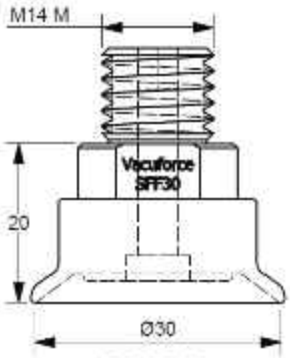

M14M

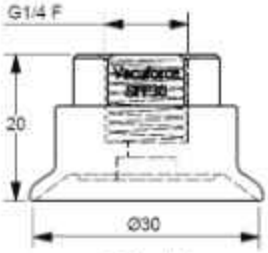

G14F

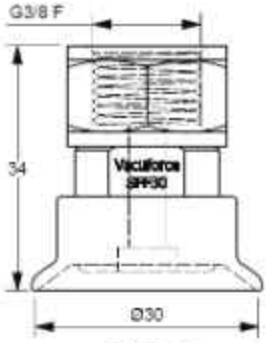

G38F

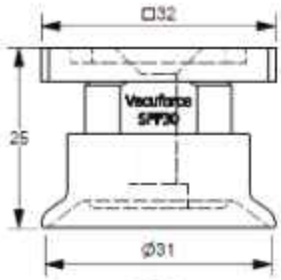

RA

SFF40 FLAT CUPS

- 40mm Diameter single bellows cup
- Available in 45 and 60 durometer NBR
- Designed for steel stamping and glass handling industry
- Heavy duty construction offering superior cycle life
- Various machinery connection options



SFF 40 N - 60 - G3/8F

Series	Diameter (mm)	Material		Durometer	Thread
SFF	40	N	NBR	45 (green)	G1/4F
				60 (orange)	G1/4M
					G3/8F
					M10M
					M14M
					RA

For cup material data please refer to vacuforce.com/materials
Part number example SFF40N-60-G3/8F - 40mm diameter 60 durometer NBR rubber vacuum cup with G3/8 female fitting

DIMENSIONS (mm)

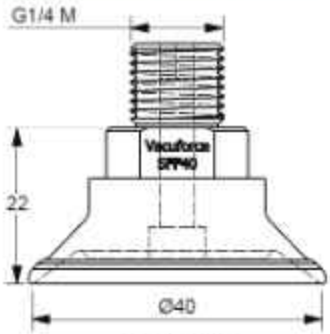

G1/4M

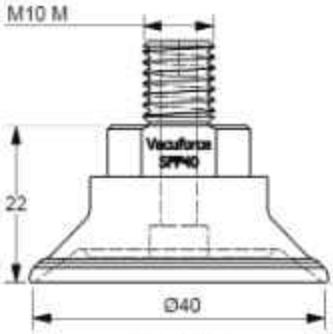

M10M

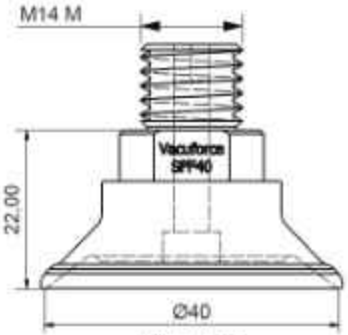

M14M

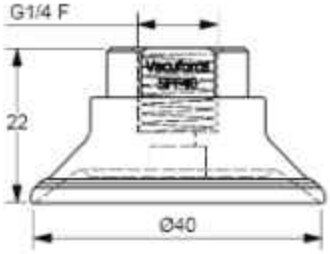

G1/4F

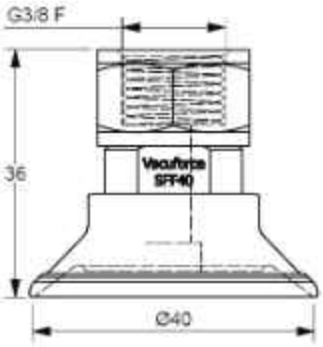

G3/8F

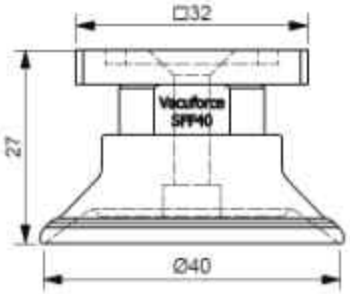

RA

SFF50 FLAT CUPS

- 50mm Diameter single bellows cup
- Available in 45 and 60 durometer NBR
- Designed for steel stamping and glass handling industry
- Heavy duty construction offering superior cycle life
- Various machinery connection options



SFF 50 N - 60 - G3/8F

Series	Diameter (mm)	Material		Durometer	Thread
SFF	50	N	NBR	45 (green)	G1/4F
				60 (orange)	G1/4M
					G3/8F
					M10M
					M14M
					RA

For cup material data please refer to vacuforce.com/materials
Part number example SFF50N-60-G3/8F - 50mm diameter 60 durometer NBR rubber vacuum cup with G3/8 female fitting

DIMENSIONS (mm)

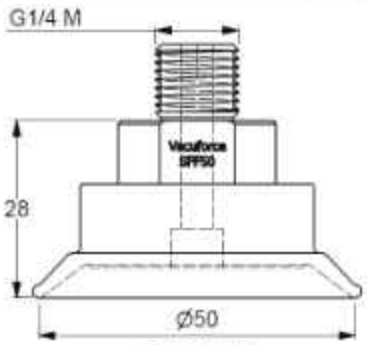

G1/4M

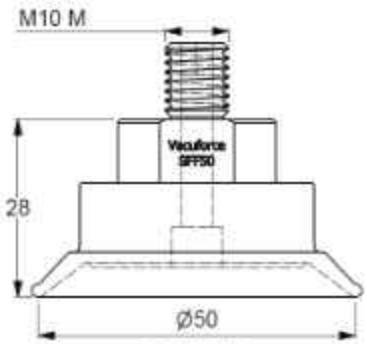

M10M

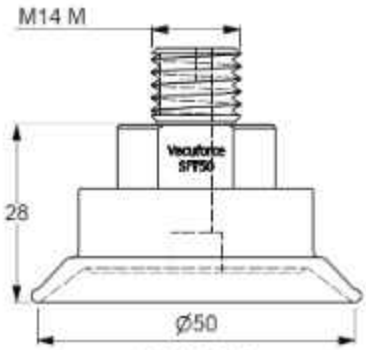

M14M

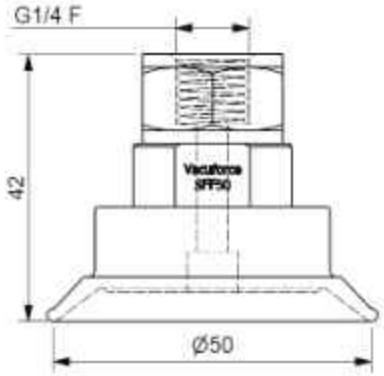

G1/4F

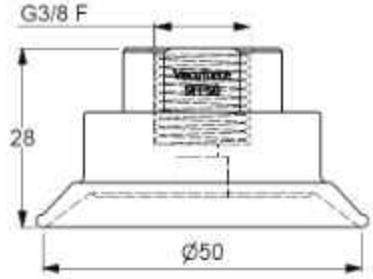

G3/8F

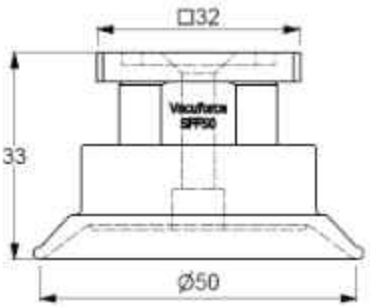

RA

SFF60 FLAT CUPS

- 60mm Diameter single bellows cup
- Available in 45 and 60 durometer NBR
- Designed for steel stamping and glass handling industry
- Heavy duty construction offering superior cycle life
- Various machinery connection options



SFF 60 N - 60 - G3/8F

Series	Diameter (mm)	Material		Durometer	Thread
	60	N	NBR	45 (green)	G1/4F
				60 (orange)	G1/4M
					G3/8F
					M10M
					M14M
					RA

For cup material data please refer to vacuforce.com/materials
Part number example SFF60N-60-G3/8F - 60mm diameter 60 durometer NBR rubber vacuum cup with G3/8 female fitting

DIMENSIONS (mm)

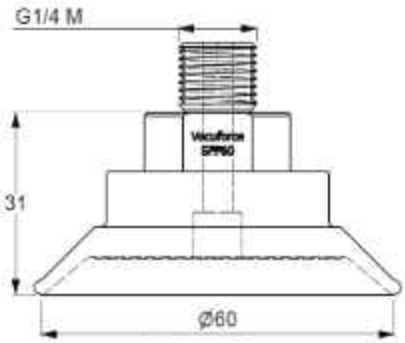

G1/4M

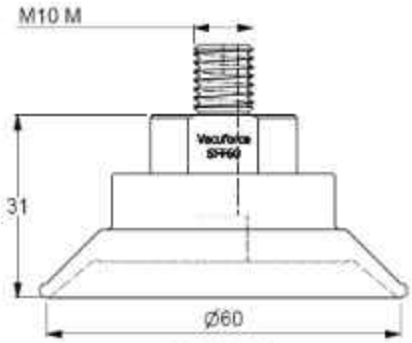

M10M

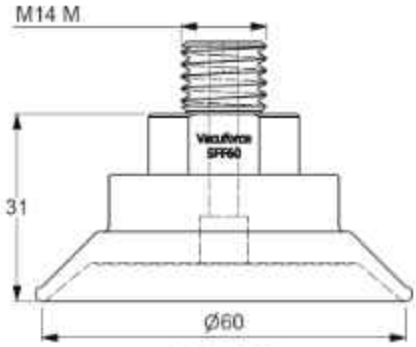

M14M

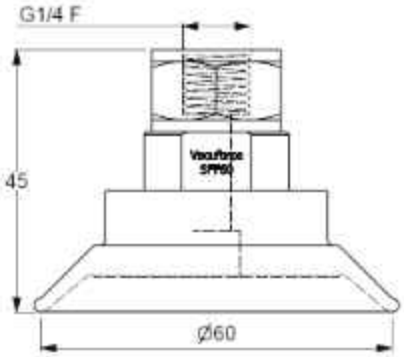

G1/4F

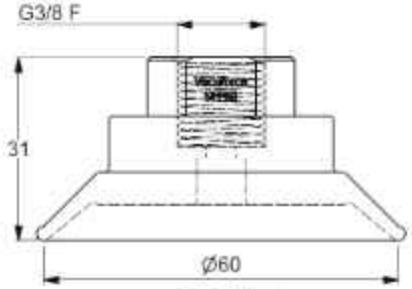

G3/8F

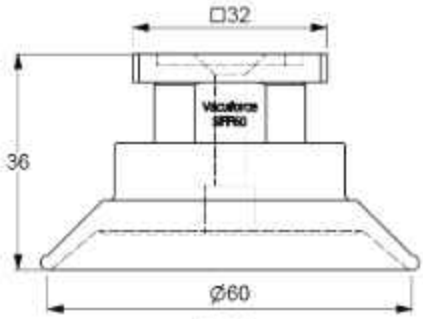

RA

SFF80 FLAT CUPS

- 80mm Diameter single bellows cup
- Available in 45 and 60 durometer NBR
- Designed for steel stamping and glass handling industry
- Heavy duty construction offering superior cycle life
- Various machinery connection options



SFF 80 N - 60 - G3/8F

Series	Diameter (mm)	Material		Durometer	Thread
SFF	80	N	NBR	45 (green)	G1/4F
				60 (orange)	G1/4M
					G3/8F
					M10M
					M14M
					RA

For cup material data please refer to vacuforce.com/materials
Part number example SFF80N-60-G3/8F - 80mm diameter 60 durometer NBR rubber vacuum cup with G3/8 female fitting

DIMENSIONS (mm)

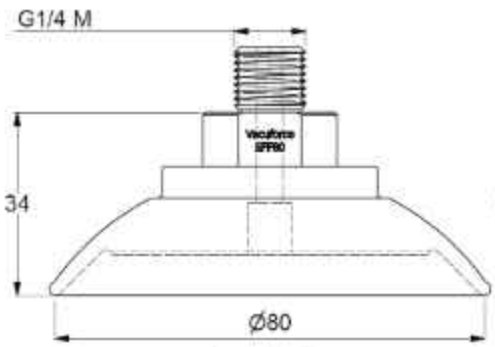

G1/4M

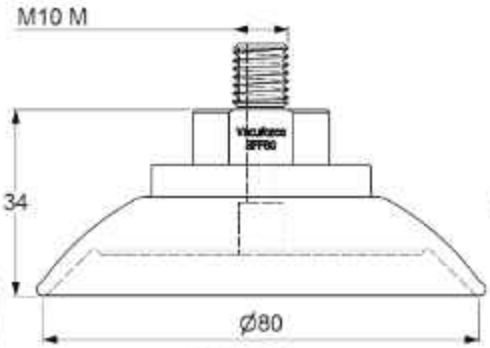

M10M

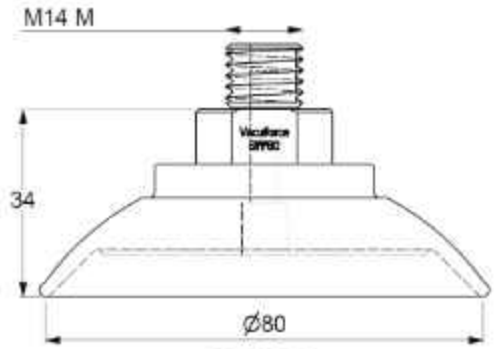

M14M

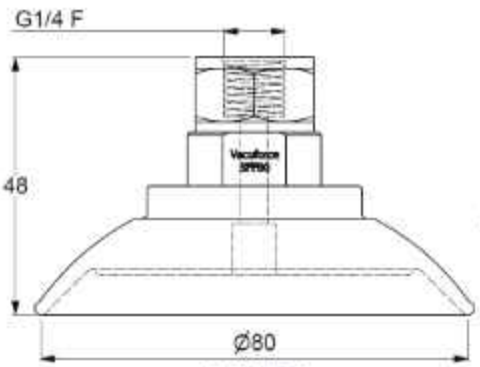

G1/4F

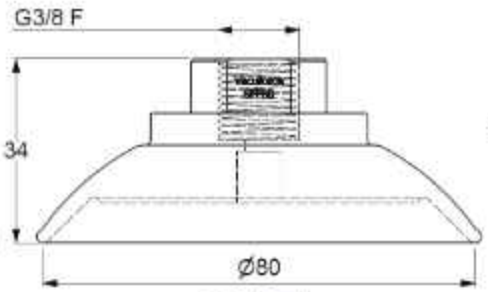

G3/8F

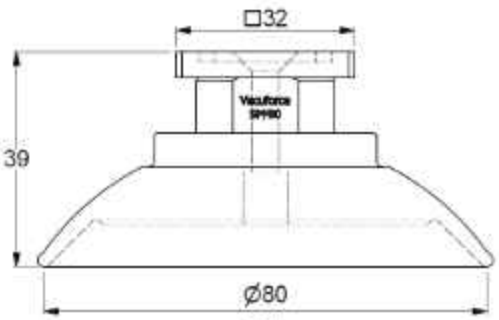

RA

SFF100 FLAT CUPS

- 100mm Diameter single bellows cup
- Available in 45 and 60 durometer NBR
- Designed for steel stamping and glass handling industry
- Heavy duty construction offering superior cycle life
- Various machinery connection options



SFF 100 N - 60 - G3/8F

Series	Diameter (mm)	Material		Durometer	Thread
	100	N	NBR	45 (green)	G1/4F
				60 (orange)	G1/4M
					G3/8F
					M10M
					M14M
					RA

For cup material data please refer to vacuforce.com/materials
Part number example SFF100N-60-G3/8F - 100mm diameter 60 durometer NBR rubber vacuum cup with G3/8 female fitting

DIMENSIONS (mm)

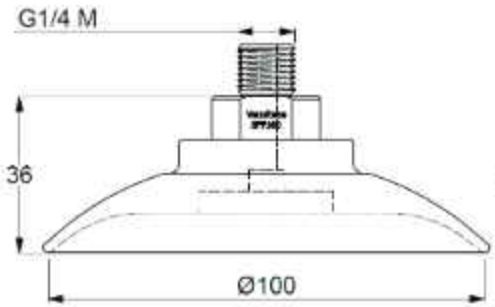

G1/4M

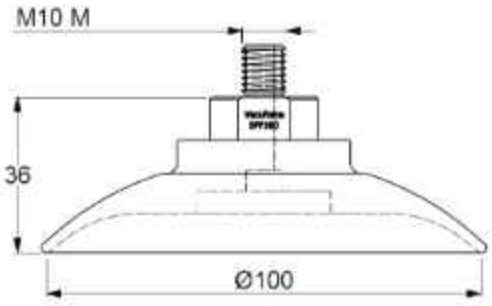

M10M

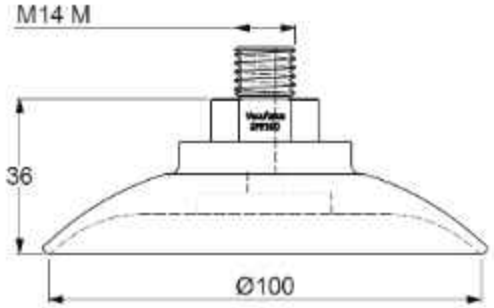

M14M

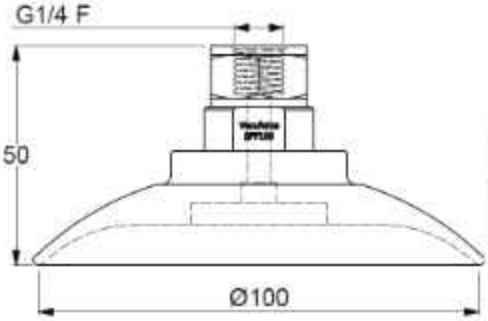

G1/4F

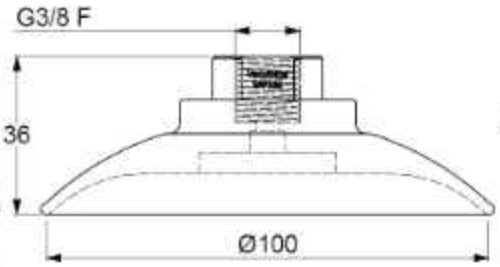

G3/8F

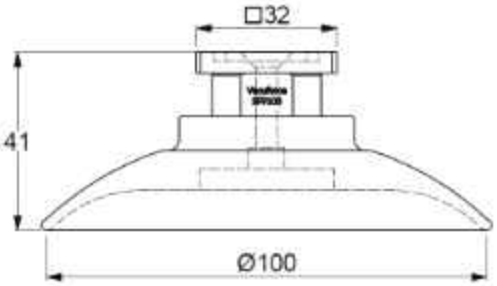

RA

SFF125 FLAT CUPS

- 125mm Diameter single bellows cup
- Available in 45 and 60 durometer NBR
- Designed for steel stamping and glass handling industry
- Heavy duty construction offering superior cycle life
- Various machinery connection options



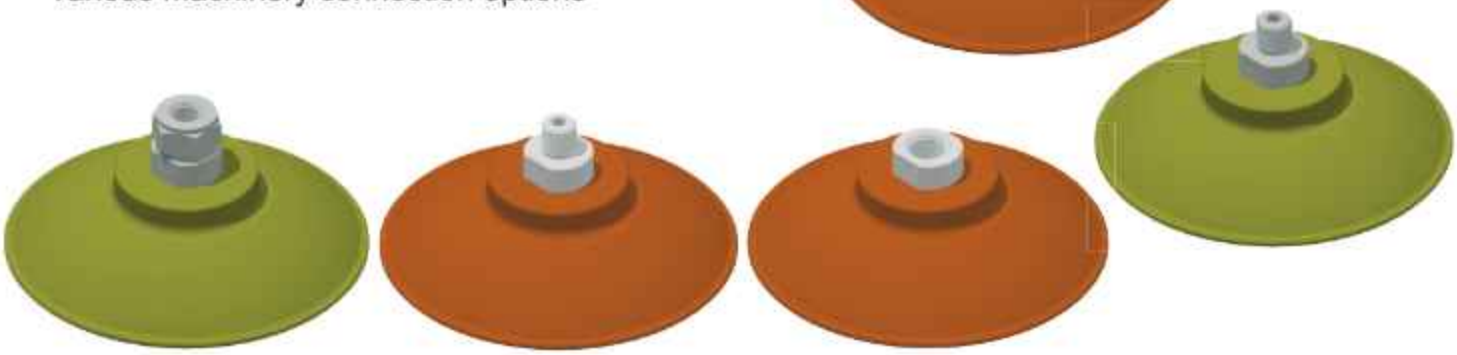

SFF	125	N	-	60	-	G3/8F
Series	Diameter (mm)	Material		Durometer		Thread
	80	N NBR		45 (green)		G1/4F
				60 (orange)		G1/4M
						G3/8F
						M10M
						M14M
						RA

For cup material data please refer to vacuforce.com/materials
Part number example SFF125N-60-G3/8F - 125mm diameter 60 durometer NBR rubber vacuum cup with G3/8 female fitting

DIMENSIONS (mm)

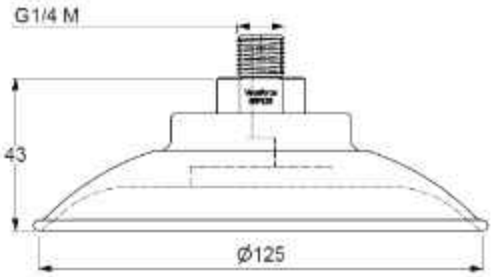

G1/4M

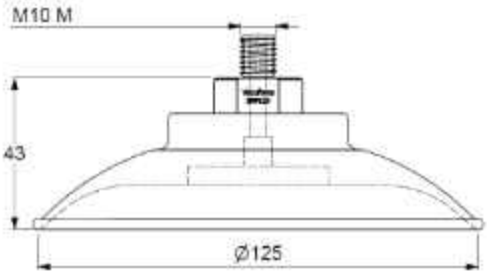

M10M

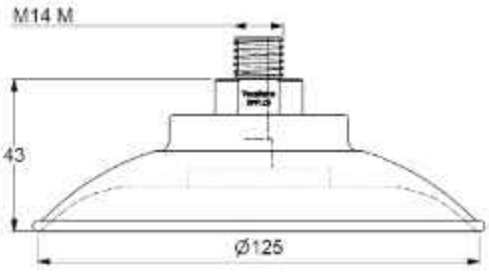

M14M

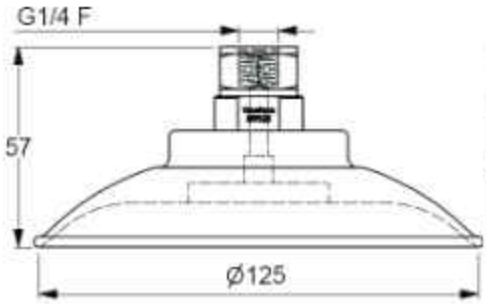

G1/4F

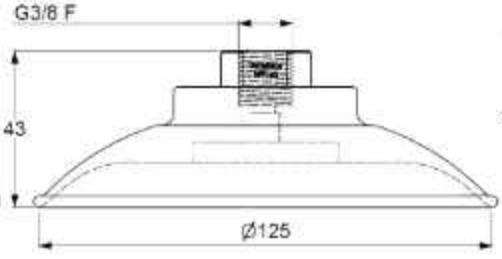

G3/8F

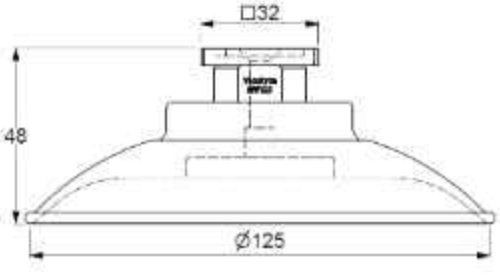

RA

SOF OVAL FLAT CUP

The SOF series of vacuum cups are designed to offer the vacuum user a cup that can pick up on narrow surfaces.

The cups include an aluminum male or female threaded fitting for machinery and vacuum source connection.

This cup is available in NBR rubber compound in both 45 and 60 Durometer. Ideal for handling pressed steel sheet and glass products.

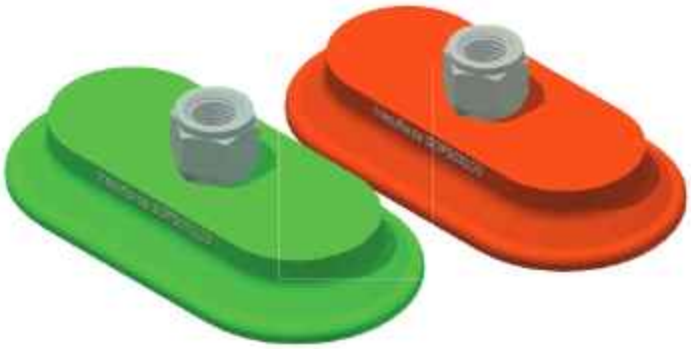

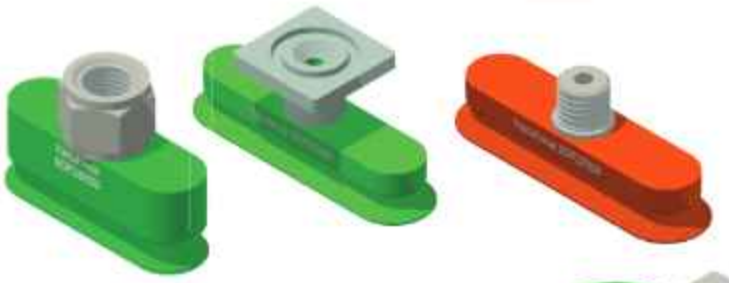



APPLICATIONS

- Automotive steel stamping
- Glass handling
- Plywood transfer
- Handling of oily steel surfaces
- Large box & carton handling

SOF 20X80 - 45 - G3/8F

Series	Model	L x W (mm)
	16X50	16 x 50
	20X80	20 x 80
	23X60	23 x 60
	30X90	30 x 90
	40X110	40 x 110
	50X100	50 x 100
	60X120	60 x 120
	70X140	70X140

Durometer
45
60

Thread
G1/4F
G1/4M
G3/8F
M10M
M14M
RA

For cup material data please refer to vacuforce.com/materials
Part number example SFF80N-60-G3/8F
80mm diameter flat cup 60 Durometer NBR with G3/8 female thread

QUICK RELEASE FITTINGS



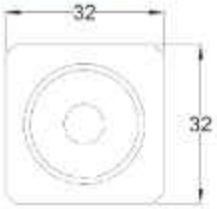

Model	T
QRG38	G3/8
QRN38	3/8NPSF

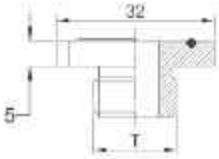

LEVEL COMPENSATORS

Refer to page 1.33 for suitable level compensators for this vacuum cup range.



SOF16X50 FLAT OVAL CUP

- 16mm x 50mm flat oval vacuum cup
- Available in 45 and 60 durometer NBR
- Designed for steel stamping and glass handling industry
- Ideal for narrow surfaces such as a steel door frame
- Heavy duty construction offering superior cycle life
- Various machinery connection options



SOF 16X50 - 45 - G3/8F

Series	Model	L x W (mm)
	16X50	16 x 50

Durometer
45
60

Thread
G1/4F
G1/4M
G3/8F
M10M
M14M
RA

For cup material data please refer to vacuforce.com/materials
Part number example SOF16X50-45-G3/8F - 16mm x 50mm oval cups in 45 durometer NBR rubber vacuum cup with G3/8 female fitting

DIMENSIONS (mm)

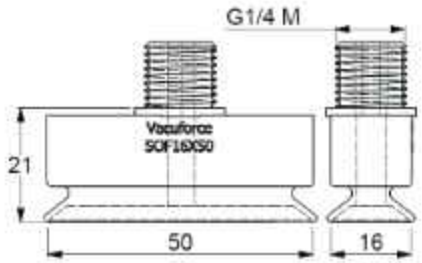

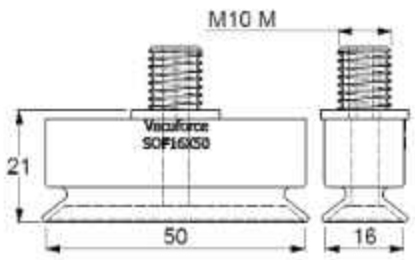

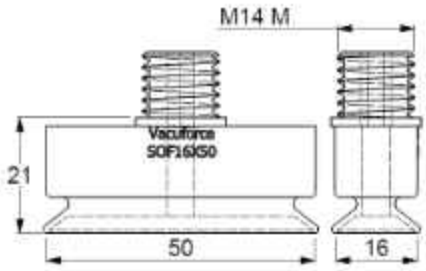

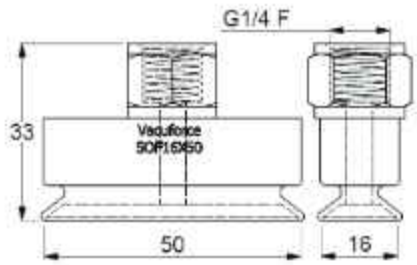

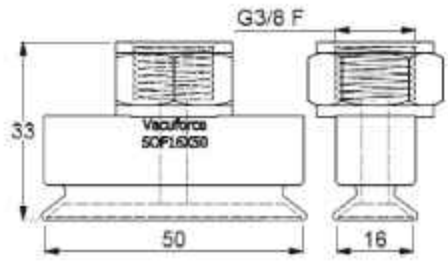

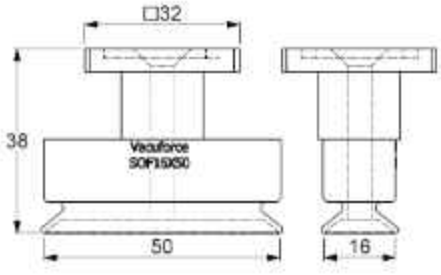

SOF20X80 FLAT OVAL CUP

- 20mm x 80mm flat oval vacuum cup
- Available in 45 and 60 durometer NBR
- Designed for steel stamping and glass handling industry
- Ideal for narrow surfaces such as a steel door frame
- Heavy duty construction offering superior cycle life
- Various machinery connection options

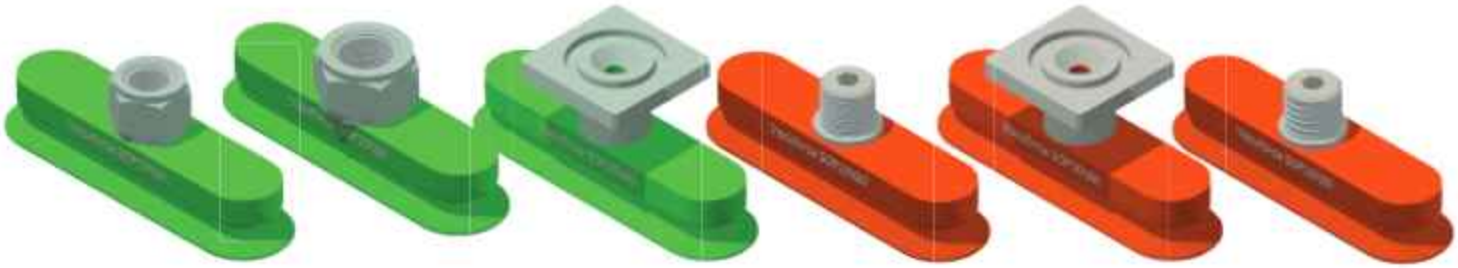

SOF – 20X80 – 45 – G3/8F

Series	Model	L x W (mm)
	20X80	20 x 80

Durometer
45
60

Thread
G1/4F
G1/4M
G3/8F
M10M
M14M
RA

For cup material data please refer to vacuforce.com/materials
Part number example SOF20X80-45-G3/8F - 20mm x 80mm oval cups in 45 durometer NBR rubber vacuum cup with G3/8 female fitting

DIMENSIONS (mm)

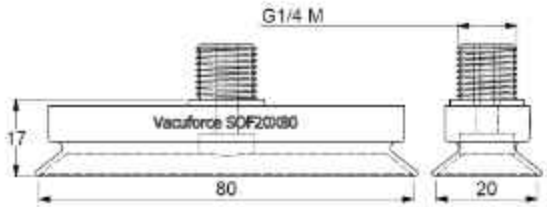



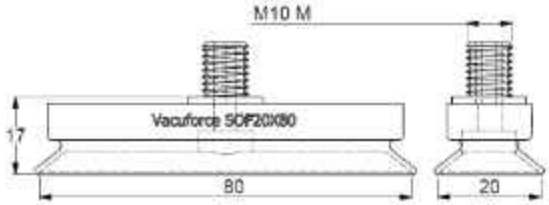



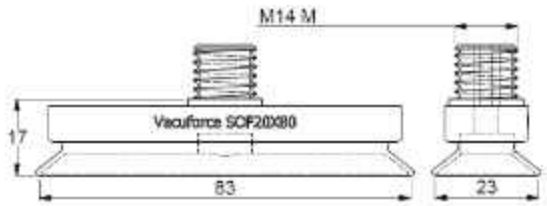

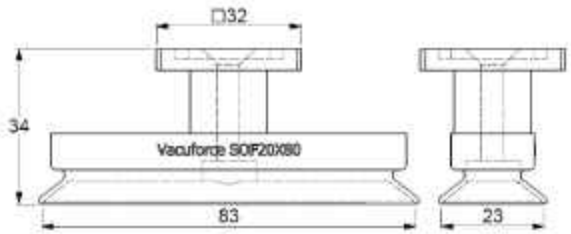

SOF30X90 FLAT OVAL CUP

- 30mm x 90mm flat oval vacuum cup
- Available in 45 and 60 durometer NBR
- Designed for steel stamping and glass handling industry
- Ideal for narrow surfaces such as a steel door frame
- Heavy duty construction offering superior cycle life
- Various machinery connection options

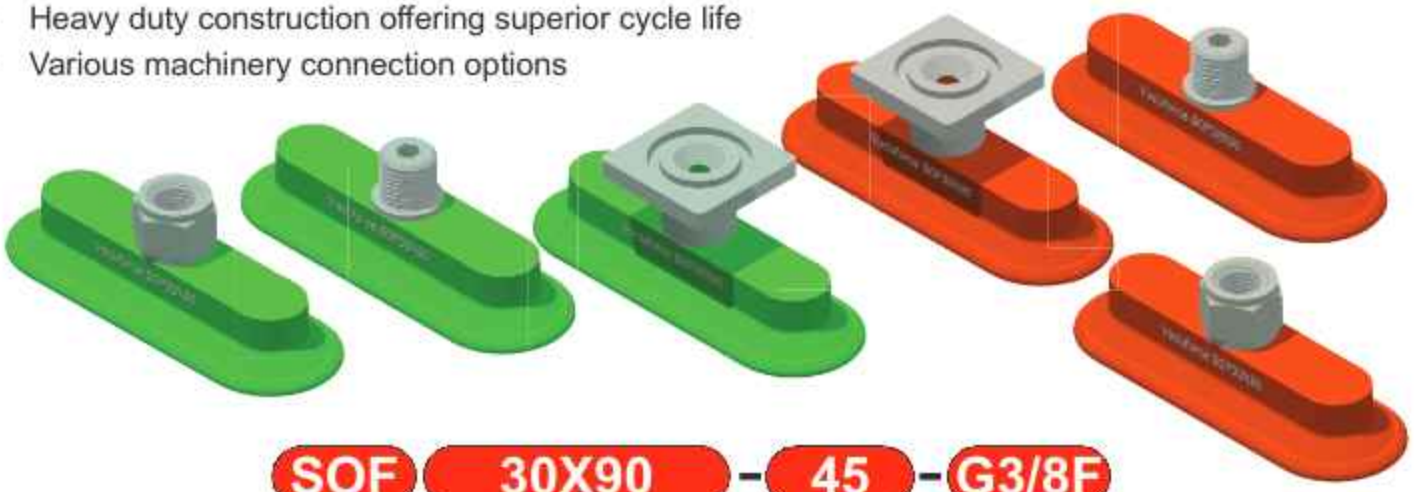

SOF | **30X90** | **45** | **G3/8F**

Series	Model	L x W (mm)
	30X90	30 x 90

Durometer
45
60

Thread
G1/4F
G1/4M
G3/8F
M10M
M14M
RA

For cup material data please refer to vacuforce.com/materials
Part number example SOF30X90-45-G3/8F - 30mm x 90mm oval cups in 45 durometer NBR rubber vacuum cup with G3/8 female fitting

DIMENSIONS (mm)

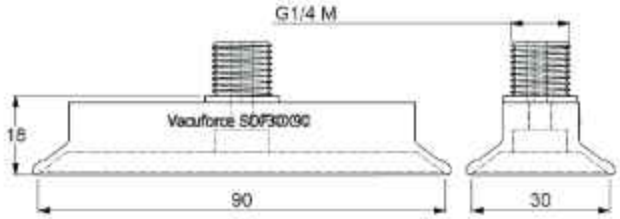

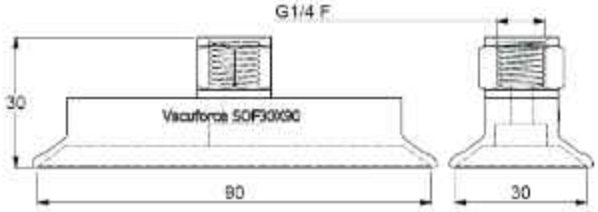

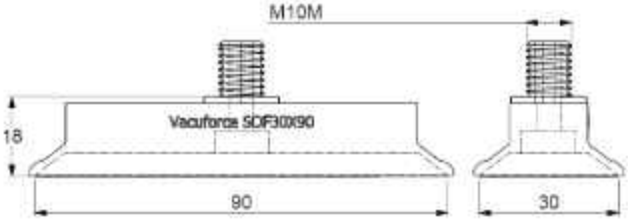

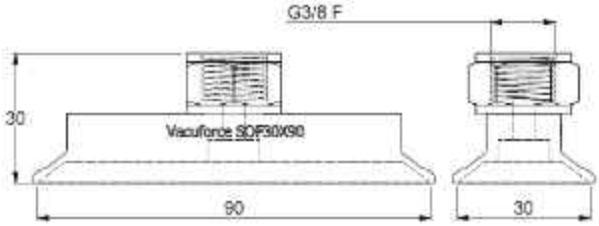

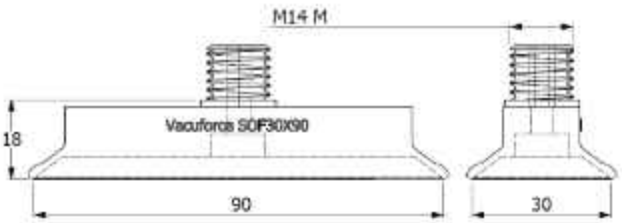

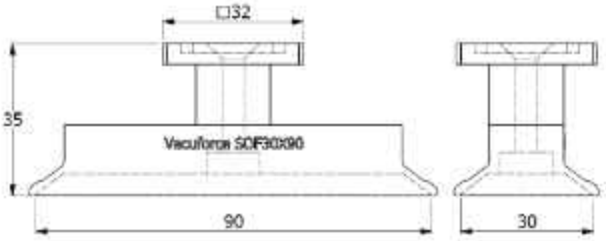

SOF40X110 FLAT OVAL CUP

- 40mm x 110mm flat oval vacuum cup
- Available in 45 and 60 durometer NBR
- Designed for steel stamping and glass handling industry
- Ideal for narrow surfaces such as a steel door frame
- Heavy duty construction offering superior cycle life
- Various machinery connection options

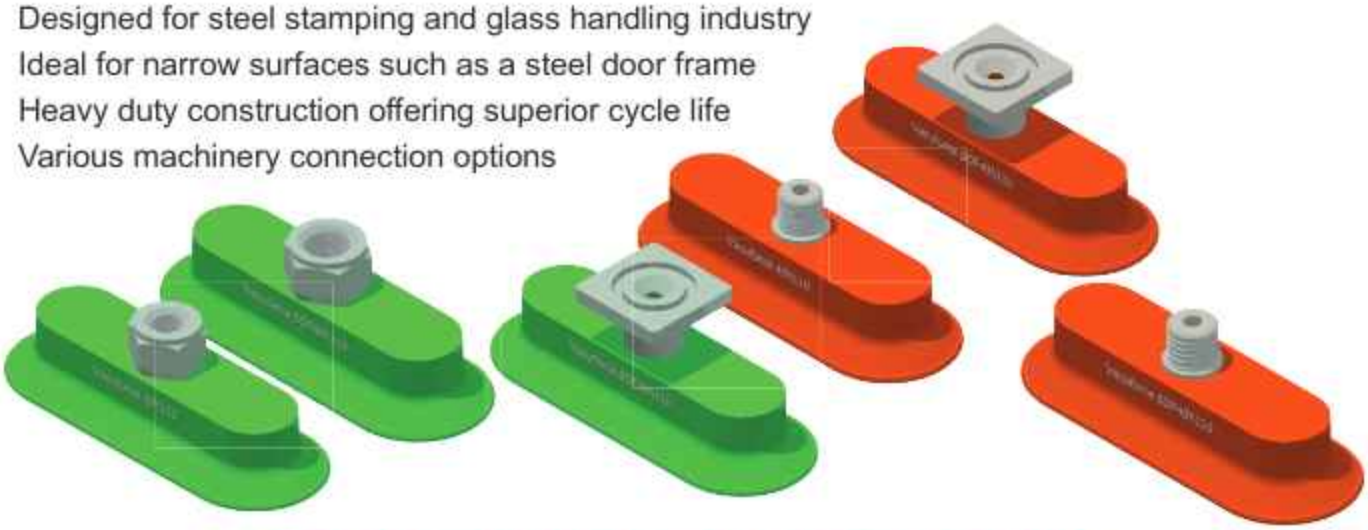

SOF 40X110 - 45 - G3/8F

Series	Model	L x W (mm)
	40X110	40 x 110

Durometer
45
60

Thread
G1/4F
G1/4M
G3/8F
M10M
M14M
RA

For cup material data please refer to vacuforce.com/materials
Part number example SOF40X110-45-G3/8F - 40mm x 110mm oval cups in 45 durometer NBR rubber vacuum cup with G3/8 female fitting

DIMENSIONS (mm)

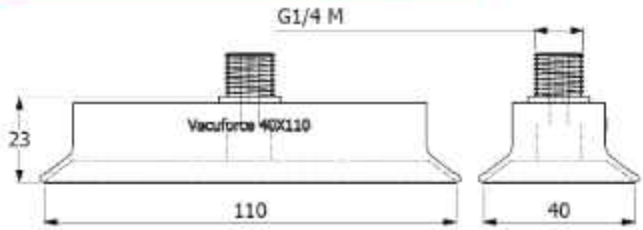

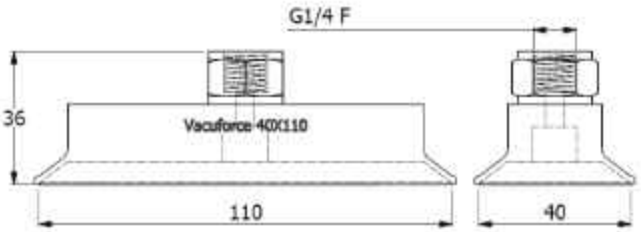

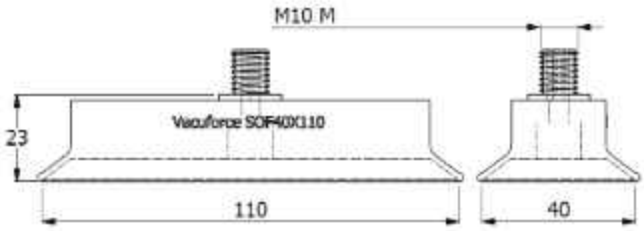

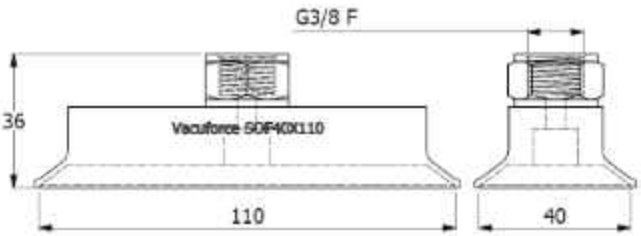

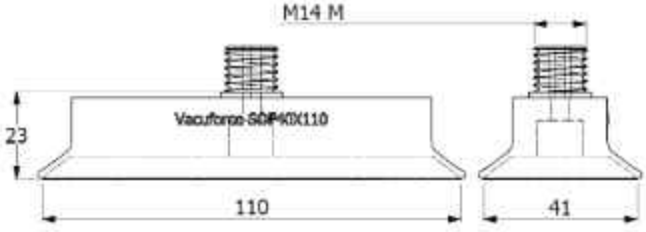

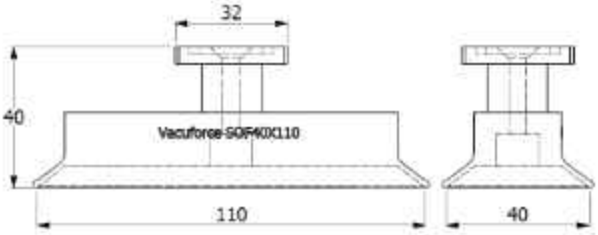

SOF50X100 FLAT OVAL CUP

- 50mm x 100mm flat oval vacuum cup
- Available in 45 and 60 durometer NBR
- Designed for steel stamping and glass handling industry
- Ideal for narrow surfaces such as a steel door frame
- Heavy duty construction offering superior cycle life
- Various machinery connection options



SOF | **50X100** – **45** – **G3/8F**

Series	Model	L x W (mm)
	50X100	50 x 100

Durometer
45
60

Thread
G1/4F
G1/4M
G3/8F
M10M
M14M
RA

For cup material data please refer to vacuforce.com/materials
Part number example SOF50X100-45-G3/8F - 50mm x 100mm oval cups in 45 durometer NBR rubber vacuum cup with G3/8 female fitting

DIMENSIONS (mm)

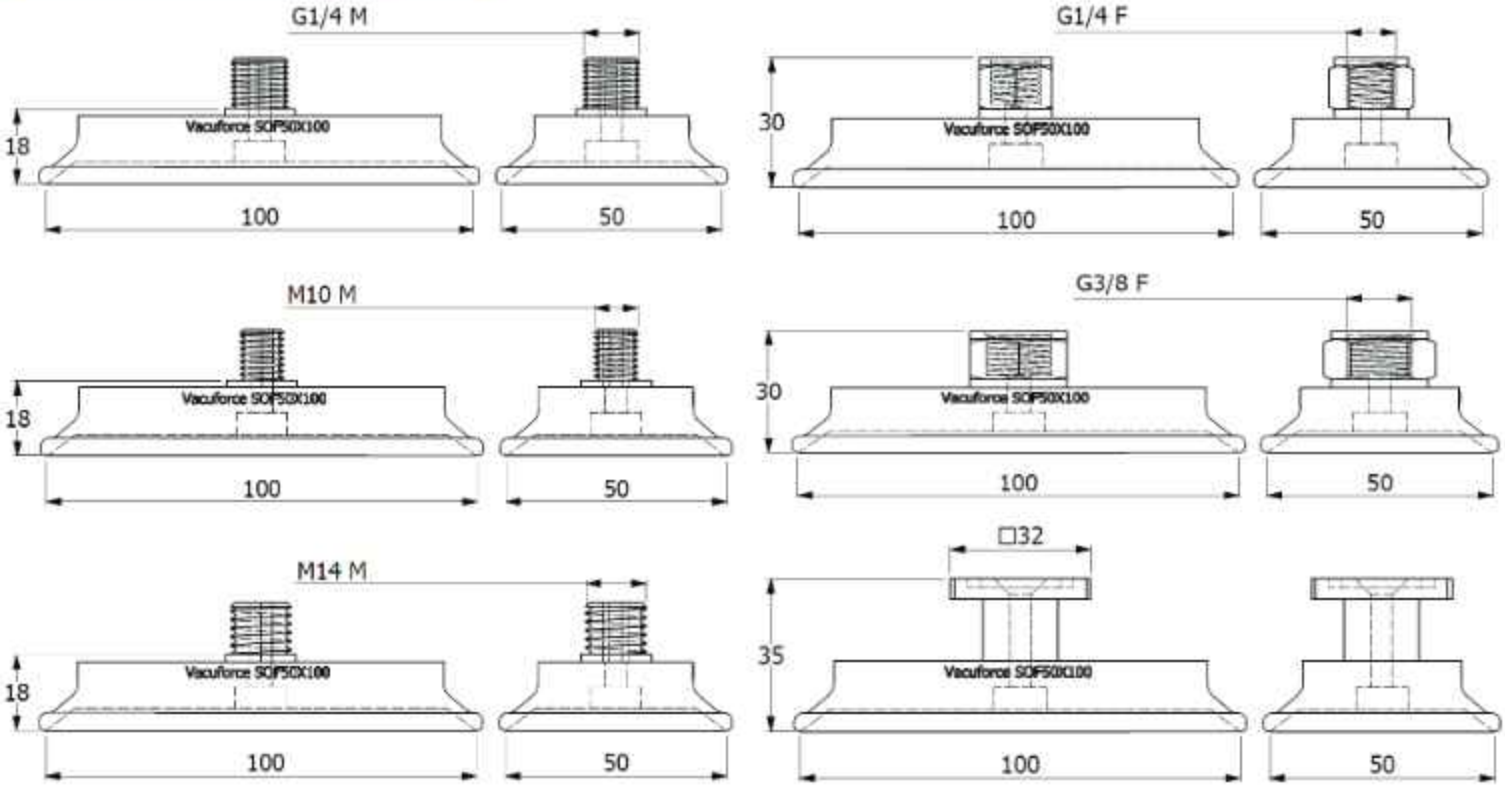

SOF60X120 FLAT OVAL CUP

- 60mm x 120mm flat oval vacuum cup
- Available in 45 and 60 durometer NBR
- Designed for steel stamping and glass handling industry
- Ideal for narrow surfaces such as a steel door frame
- Heavy duty construction offering superior cycle life
- Various machinery connection options



SOF | **60X120** | **45** | **G3/8F**

Series	Model	L x W (mm)
	60X120	60 x 120

Durometer
45
60

Thread
G1/4F
G1/4M
G3/8F
M10M
M14M
RA

For cup material data please refer to vacuforce.com/materials
Part number example SOF60X120-45-G3/8F - 60mm x 120mm oval cups in 45 durometer NBR rubber vacuum cup with G3/8 female fitting

DIMENSIONS (mm)

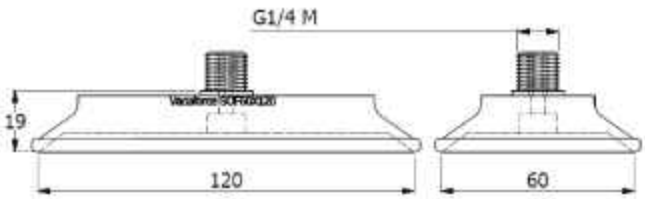

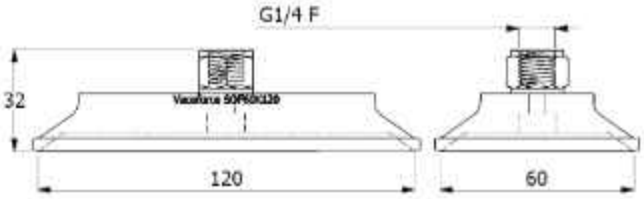

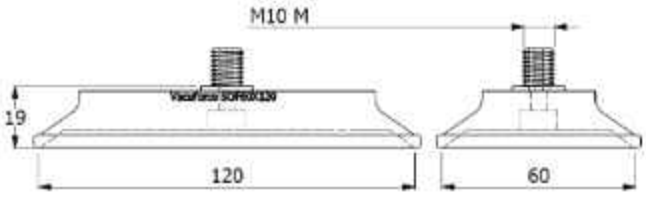

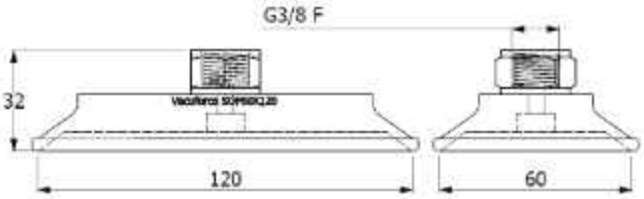

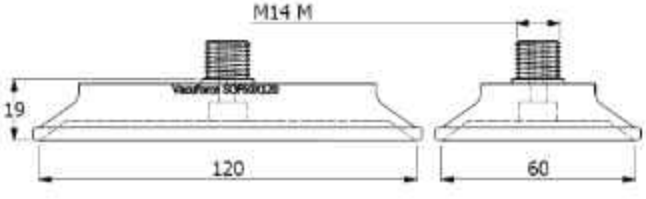

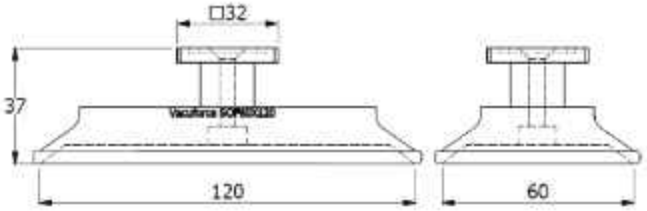

SOF70X140 FLAT OVAL CUP

- 70mm x 140mm flat oval vacuum cup
- Available in 45 and 60 durometer NBR
- Designed for steel stamping and glass handling industry
- Ideal for narrow surfaces such as a steel door frame
- Heavy duty construction offering superior cycle life
- Various machinery connection options









SOF – **70X140** – **45** – **G3/8F**

Series	Model	L x W (mm)
	70X140	70 x 140

Durometer
45
60

Thread
G1/4F
G1/4M
G3/8F
M10M
M14M
RA

For cup material data please refer to vacuforce.com/materials
Part number example SOF70X140-45-G3/8F - 70mm x 140mm oval cups in 45 durometer NBR rubber vacuum cup with G3/8 female fitting

DIMENSIONS (mm)

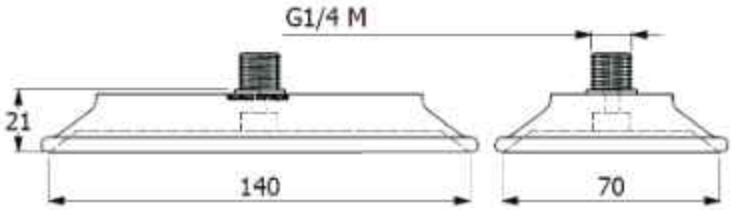

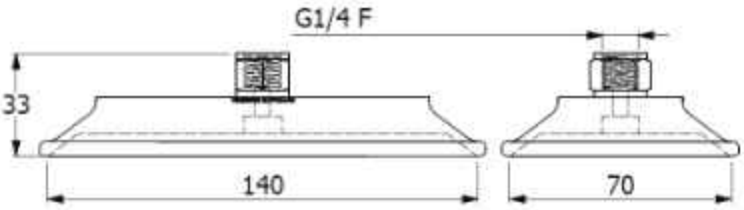

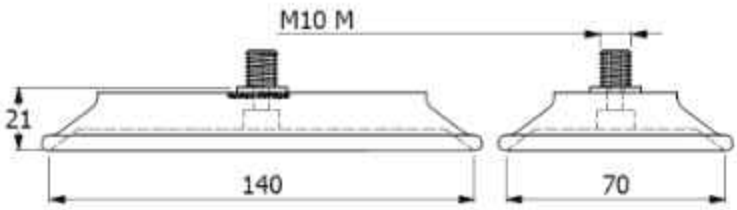

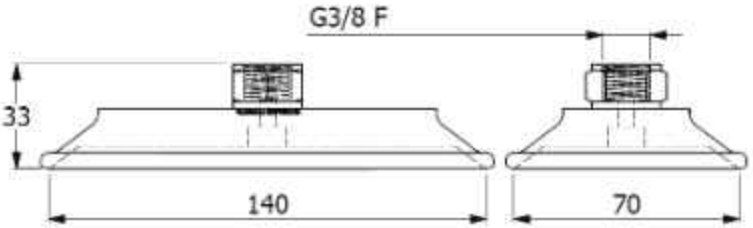

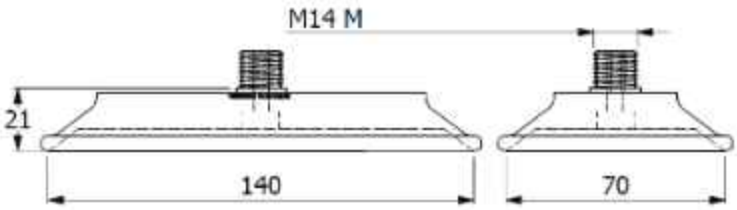

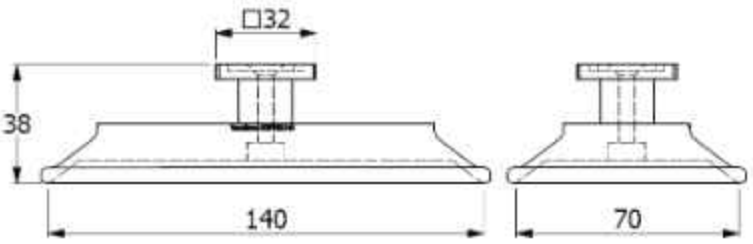

SNP FOAM SEAL CUPS

- Designed for handling rough or embossed materials
- Excellent vacuum seal for wood, brick, stone and more
- Two types of foam density depending on application
- Self adhesive foam seal



SNP	107x 75	NAT

Series	Length x Width (mm)
	107x75
	135x50
	135x60
	290x68
	290x140

Foam Type	
NAT	Natural Rubber
NBR	Nitrile Rubber

Part number example SNP107X75NAT
107mm x 75mm Natural Foam Rubber Suction Cup Including Fitting

DIMENSIONS (mm)

SNP107X75, SNP135X50 & SNP135X60

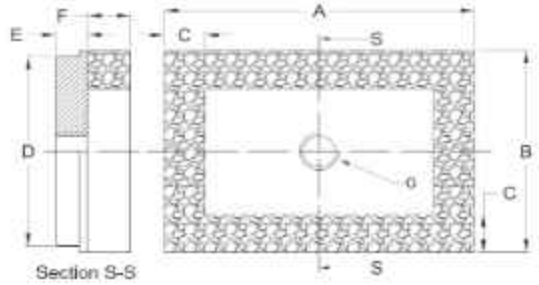

Model	A	B	C	D	E	F	G
SNP107X75	107	75	15	70	11	15	G1/8
SNP135X50	135	50		45			
SNP135X60		60		55			
SNP290X68	290	68		62			G1/2
SNP290X140		140		134			

SNP290X68, SNP290X140

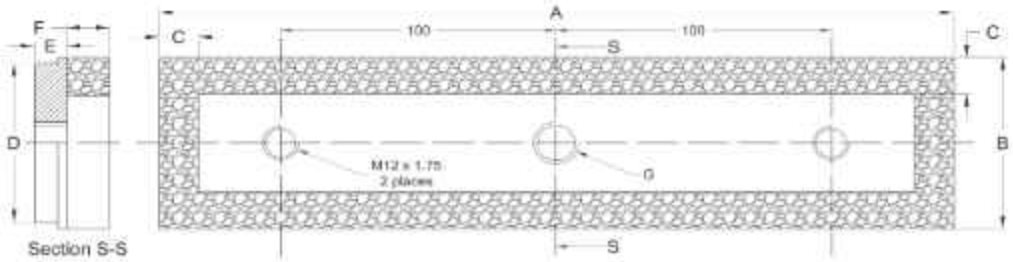

Spare Seals

Assembly	Spare Seal
SNP107X75	FR107X75
SNP135X50	FR135X50
SNP135X60	FR135X60
SNP290X68	FR290X68
SNP290X140	FR290X140



LEVEL COMPENSATORS

Refer to page 1.33 for suitable NON-ROTATING level compensators for this vacuum cup range.



SOP FOAM SEAL CUPS

- Designed for handling rough or embossed materials
- Excellent vacuum seal for wood, brick, stone and more
- Two types of foam density depending on application
- Self adhesive foam seal



DIMENSIONS (mm)

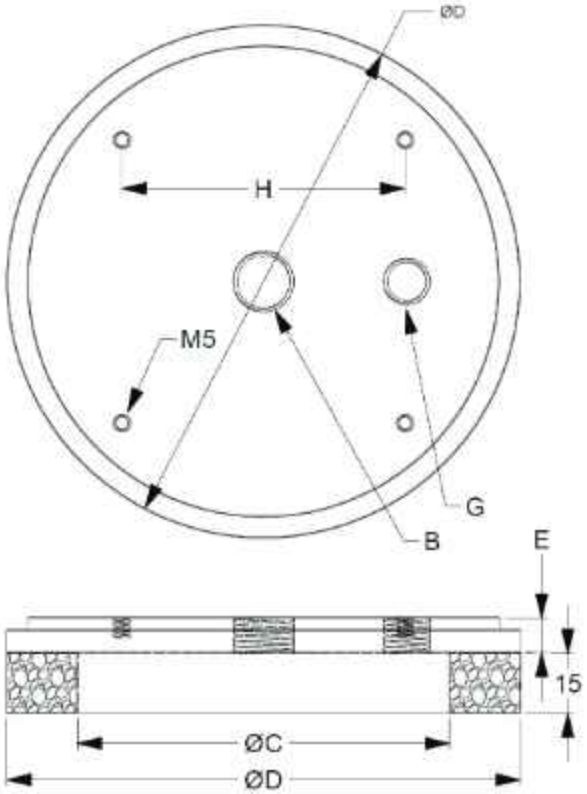

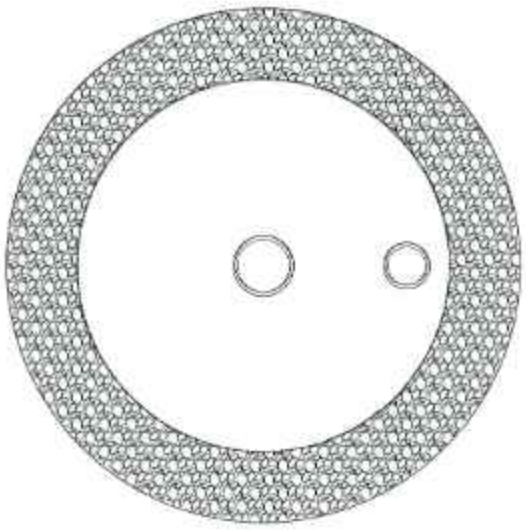

SOP	92	NAT

Series	Diameter (mm)
	40
	64
	92
	127
	180

Foam Type	
NAT	Natural Rubber
NBR	Nitrile Rubber

Part number example SOP92NAT
92mm Diameter Natural Foam Rubber Suction Cup Including Fitting

Model	A	B	C	D	E	F	G
SOP40	40	G1/4	20	40	10	15	n/a
SOP64	60		40	64			
SOP92	88	G3/8	64	92	15		G3/8
SOP127	120		92	127			
SOP180	160	G1/2	140	180			

Spare Seals

Assembly	Natural Rubber Seal	Nitrile Rubber Seal
SOP40	FR40NAT	FR40NBR
SOP64	FR64NAT	FR64NBR
SOP92	FR92NAT	FR92NBR
SOP127	FR127NAT	FR127NBR
SOP180	FR180NAT	FR180NBR



VS FOAM SEAL CUPS

The EPDM foam vacuum cups are developed for handling very rough or coarse products such as concrete, rough sawn wood, marble and granite etc. These cups are sold as two separate parts.

1. Anodized Aluminum Support
2. Foam Seal

The foam is able to deform to the profile of the product being handled and offer a virtually air tight seal to enable safe lift and transfer. A mounting port is central to the support. This thread is suitable for either 1/2NPT or G1/2 studding.

If a separate vacuum port is required, the offset G1/4 port can be used. This port is used for either a venturi or vacuum gauge connection.



Fitting and Cup Seal Assembled



The cup fitting and seal should be ordered seperately

Cup Fitting Only	Seal Only
VFCF150MMF	VS150-E







DIMENSIONS (mm)

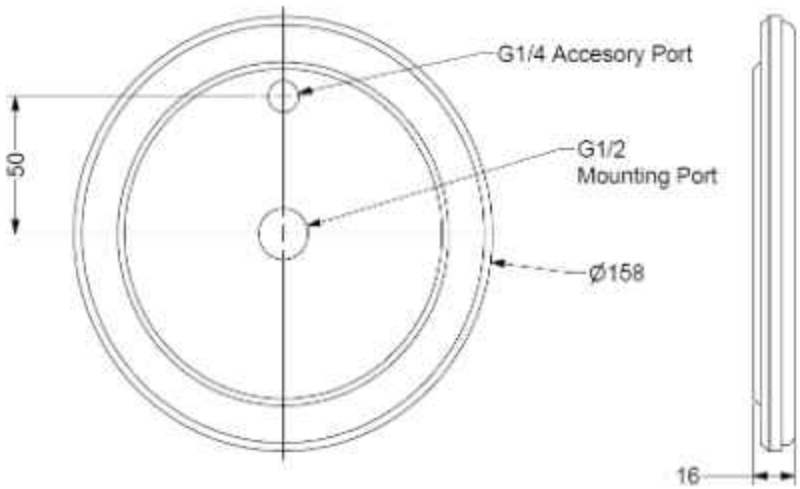

These cup fittings enable the vacuum cups shown in this catalogue to be mounted to machinery and other apparatus. All male threads utilize the Vacuforce Tri Thread which is a universal thread form suitable for connection to female NPT, NPSF, BSPT and BSPP threads.

All fittings are hard anodized and can be used with all VFB, VFBL, VFDB and VFF vacuum cups.



FITTING TYPE A

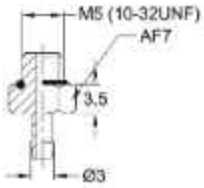

Model
VFCFB3-M5

FITTING TYPE B

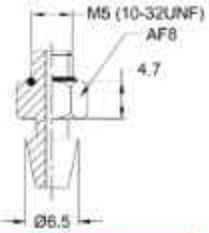

Model
VFCFB6.5-M5

FITTING TYPE B

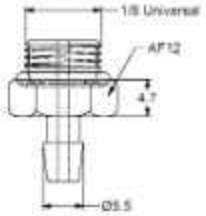

Model
VFCF10-U01



FITTING TYPE C

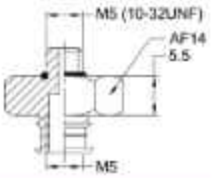

Model
VFCF20-M5

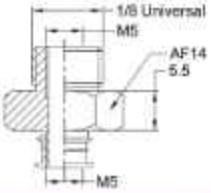

Model
VFCF20-U01

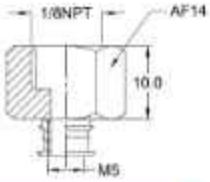

Model
VFCF20-1/8FNPT

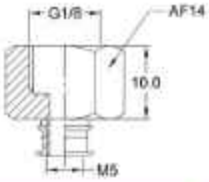

Model
VFCF20-FG1/8

FITTING TYPE D

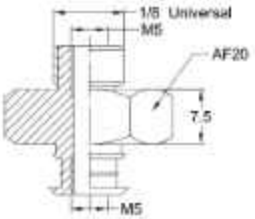

Model
VFCF40-U01

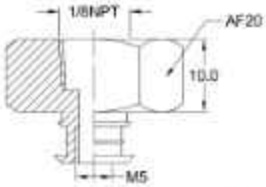

Model
VFCF40-1/8FNPT

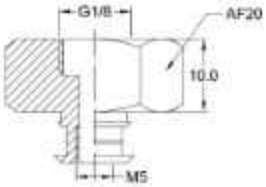

Model
VFCF40-FG1/8

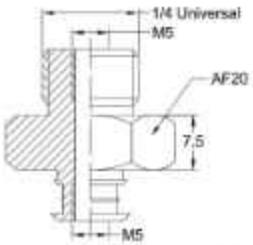

Model
VFCF40-U02

VACUUM CUP FITTINGS

FITTING TYPE D

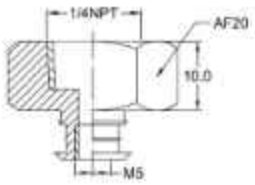

Model
VFCF40-1/4FNPT

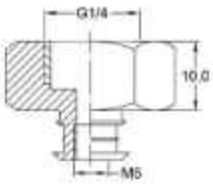

Model
VFCF40-FG1/4

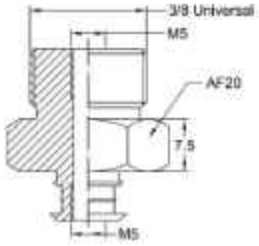

Model
VFCF40-U03

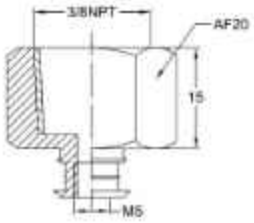

Model
VFCF40-3/8FNPT

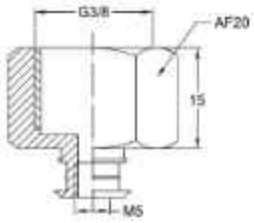

Model
VFCF40-FG3/8

FITTING TYPE E

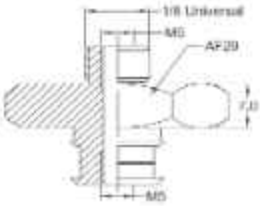

Model
VFCF50-U01

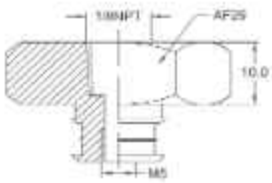

Model
VFCF50-1/8FNPT

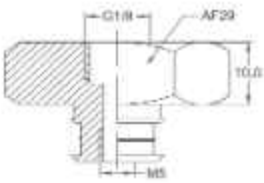

Model
VFCF50-FG1/8

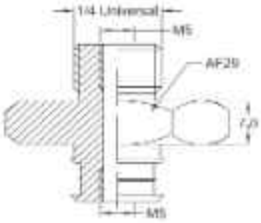

Model
VFCF50-U02

FITTING TYPE E

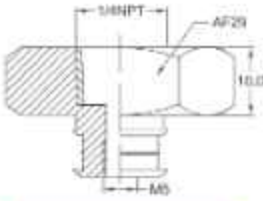

Model
VFCF50-1/4FNPT

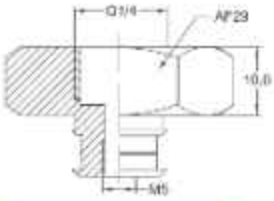

Model
VFCF50-FG1/4

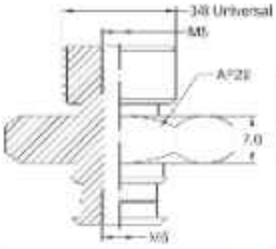

Model
VFCF50-U03

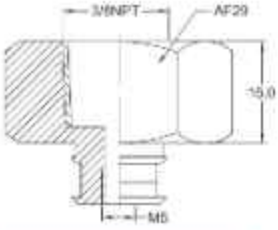

Model
VFCF50-3/8FNPT

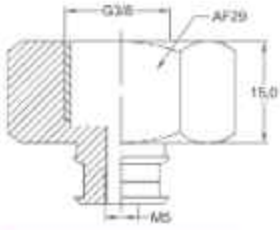

Model
VFCF50-FG3/8

FITTING TYPE F

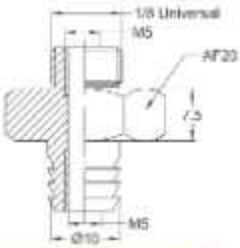

Model
VFCFB10-U01

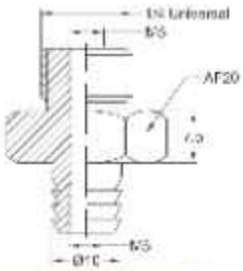

Model
VFCFB10-U02

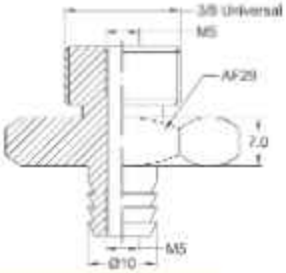

Model
VFCFB10-U03

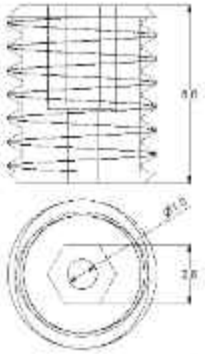

Model
VFOS1.0

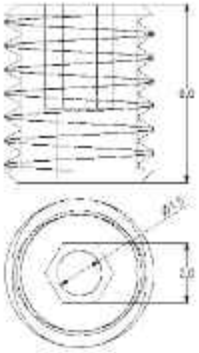

Model
VFOS1.5

FITTING TYPE J, K & L

The cup fitting series J, K and L utilize M4 bolts to attach the corresponding cup to the fitting body. The fitting model number shown in the table below includes the necessary bolts.

The K & L series fitting has an optional 1/8 vacuum port as shown by T2 in the drawing below.

VFCF	75	-	1/8	N
Series	Model		Mounting Thread	Thread Type

Model
75
110
150

Thread Type	
	BSPP
N	NPT



Fitting Type	Model	ØA	PCD	T1	T2	H	ØB
J	VFCF75-1/8	45	35	1/8	n/a	18	55
	VFCF75-1/4			1/4			
	VFCF75-3/8			3/8			
K	VFCF110-1/4	70	55	1/4	1/8	15	79
	VFCF110-3/8			3/8			
	VFCF110-1/2			1/2			
L	VFCF150-3/8	90	71	3/8		16	112
	VFCF150-1/2			1/2			

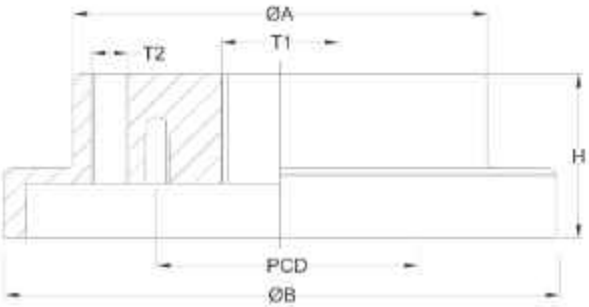

Blanking Plugs



These blanking plugs are used to block female threads in a vacuum, compressed air system or a component port. These fittings utilize universal threads and are suitable for NPT, BSPT and BSPP(G) pipe thread connection.

Model	Thread Size
VFBP1/8	1/8 Universal
VFBP1/4	1/4 Universal
VFBP3/8	3/8 Universal

QUICK RELEASE FITTINGS



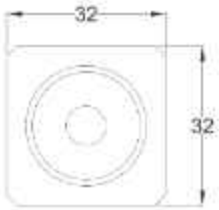

Model	T
QRG38	G3/8
QRN38	3/8NPSF

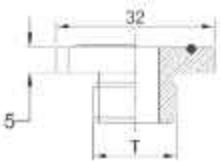

VACUUM CUP HOLDERS

The Vacuforce cup holders, often referred to as level compensators, are normally used on multiple vacuum cup systems such as sheet or plate handling where the height of the load varies during production cycles. These cup holders have been developed with the best materials to offer maximum life in the toughest applications.



Materials

- Hard anodized aluminum thread fittings
- Nickel Plated bushings and lock nuts
- Hard anodized aluminum or chrome plated steel rods

VFLC	EX	NR	18	25	M16	X40
	Spring Type	Rotating	Cup Thread	Buffer Stroke	Bulkhead Thread	Bulkhead Length

Spring Type		Rotating	
EX	External	NR	Non-Rotating
IN	Internal		Rotating

Cup Thread	
M5	M5
18	G1/8
14	G1/4
38	G3/8
12	G1/2

Non-Rotating Models

Non-Rotating models models are used in applications where a single unit is being used for pick and place. They are also suitable for connection to a square or oval suction cup where orientation of the cup and part must remain constant.



Rotating Models



VFLCINM515M10X23

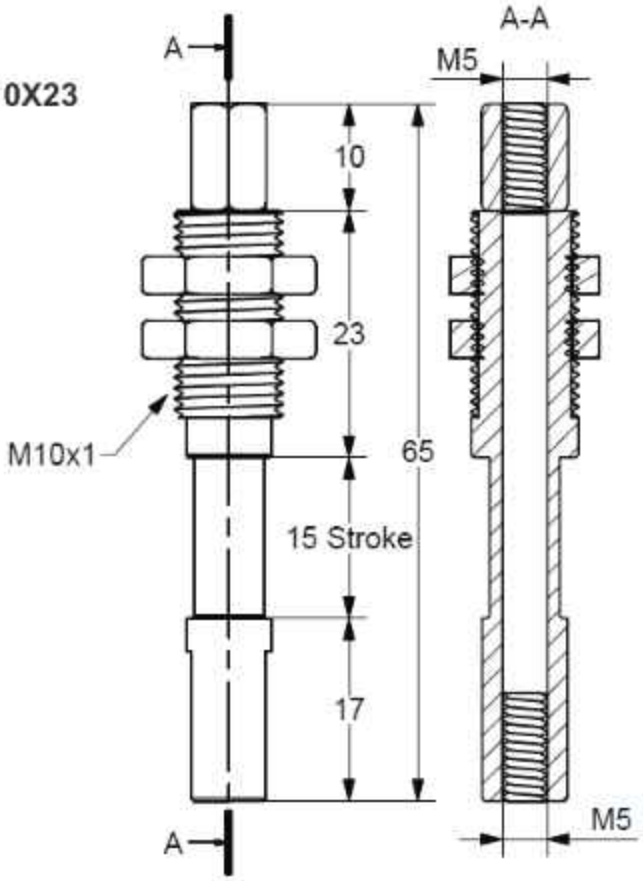

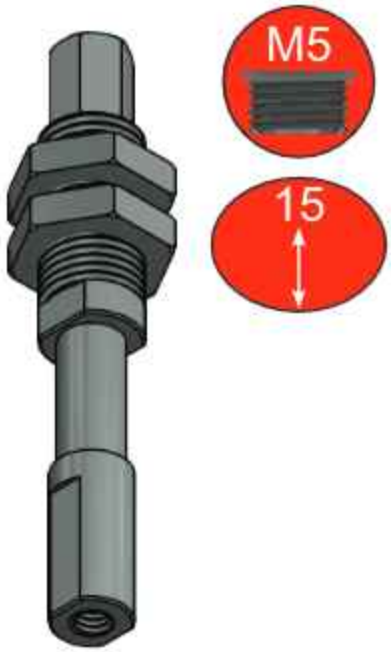

VACUUM CUP HOLDERS G1/8

VFLCIN1820M16X40

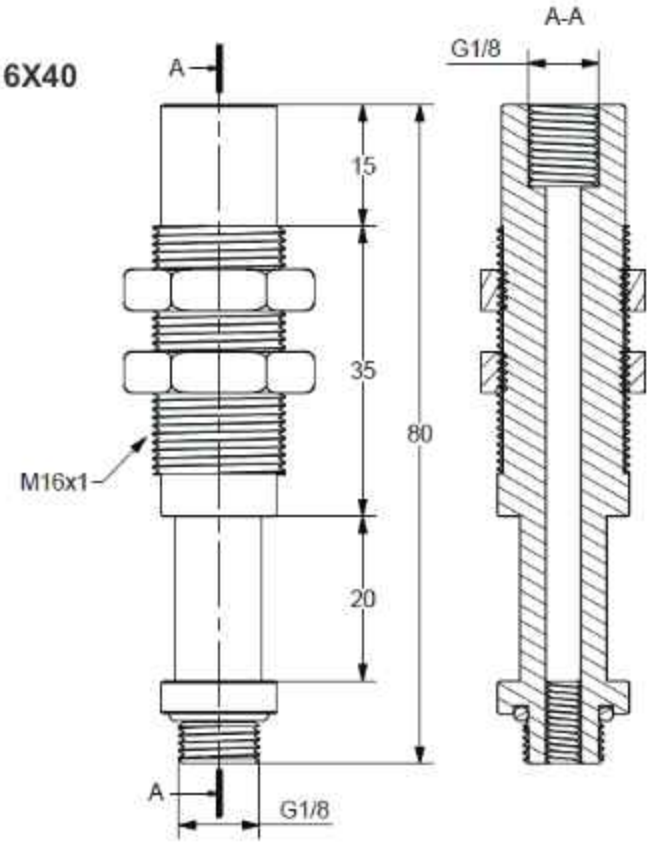

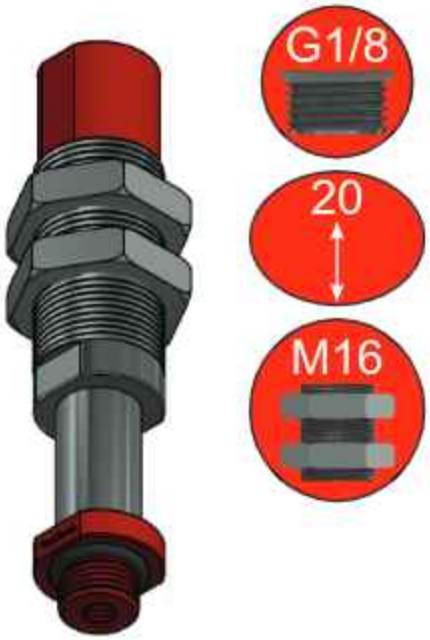

VFLCINNR1820M16X40

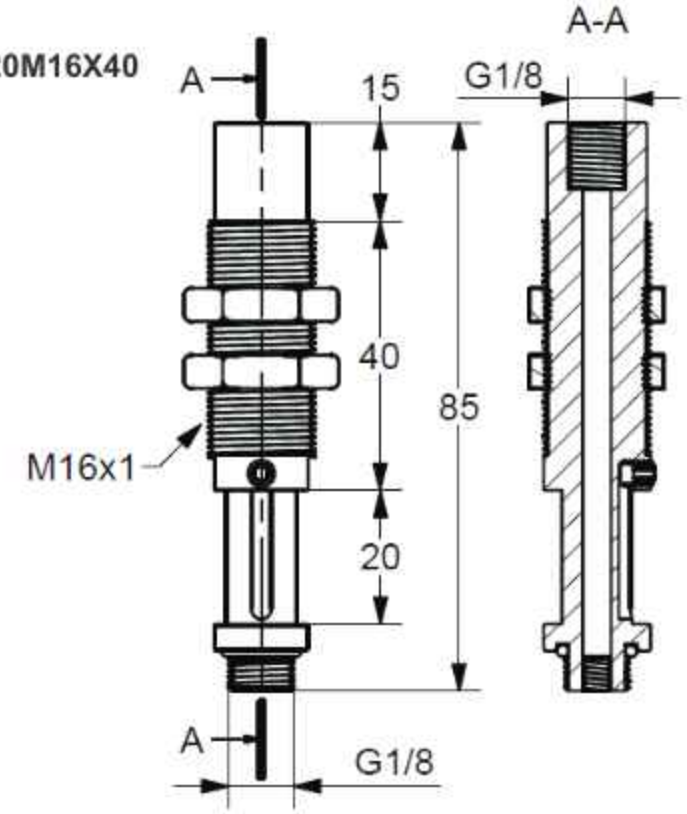

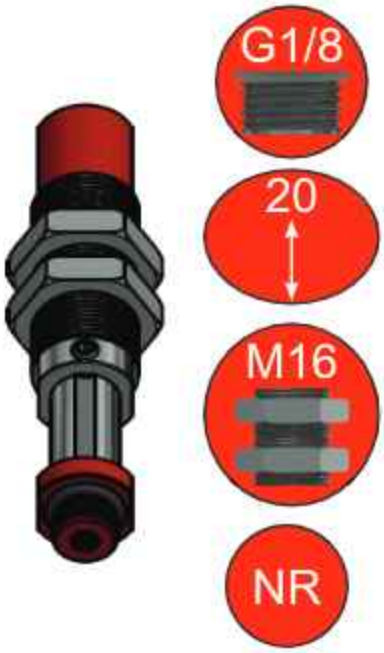

VFLCEX1825M16X40

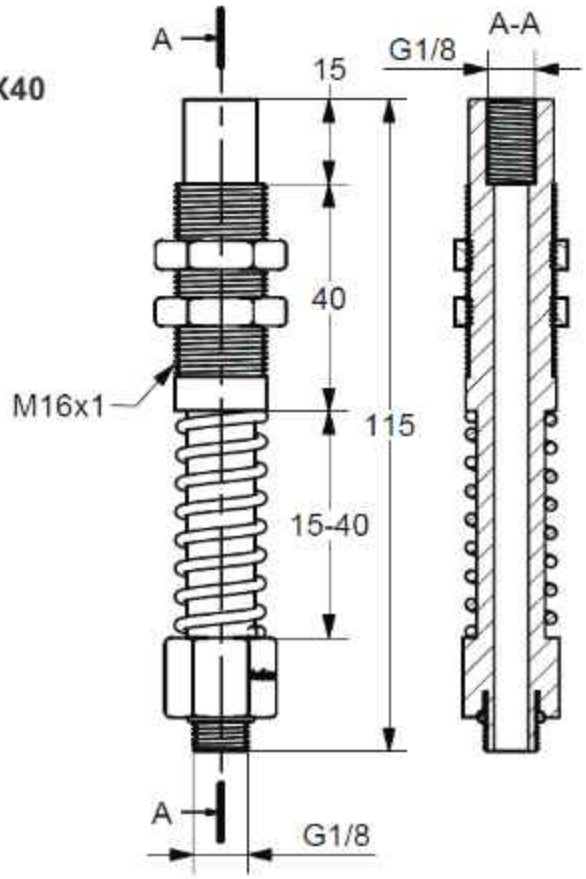



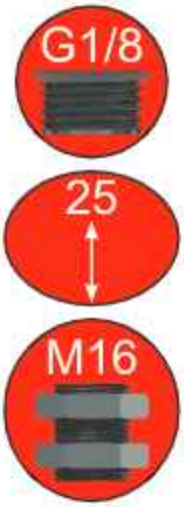

VFLCEXNR1825M16X40

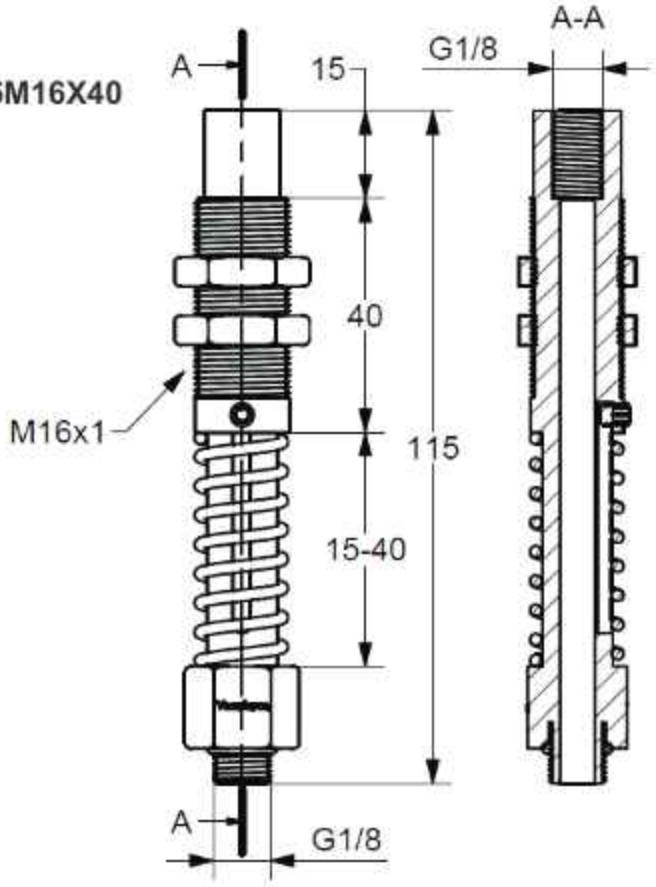



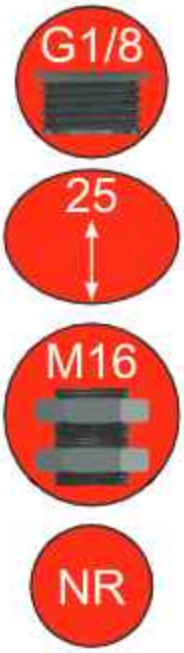

VACUUM CUP HOLDERS G1/8

VFLCIN1830M16X49

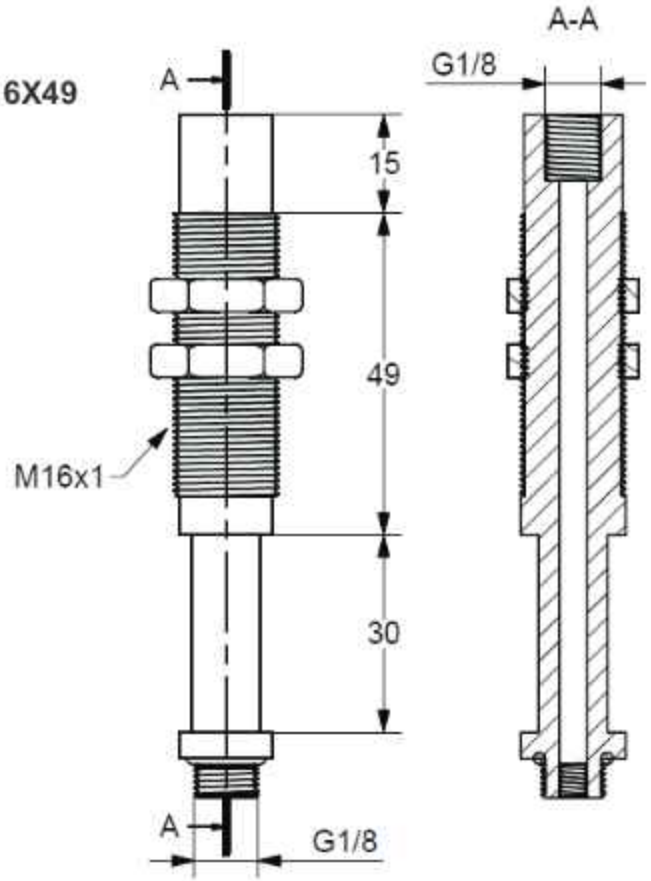



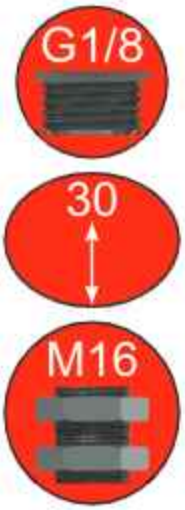

VFLCINNR1830M16X53

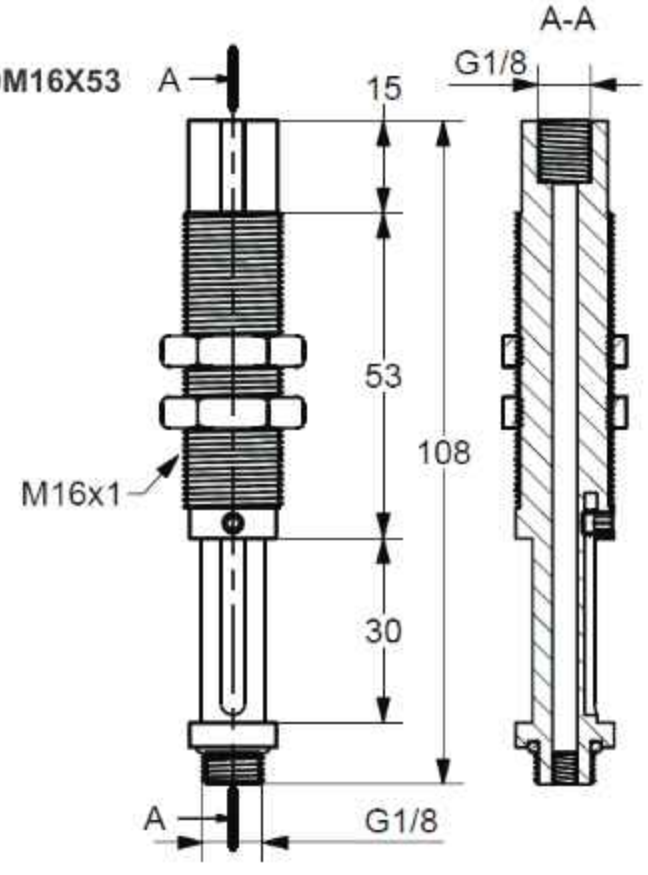



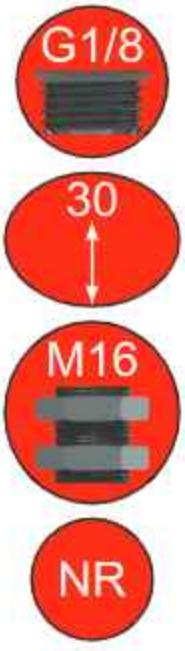

VFLCEX1850M16X50

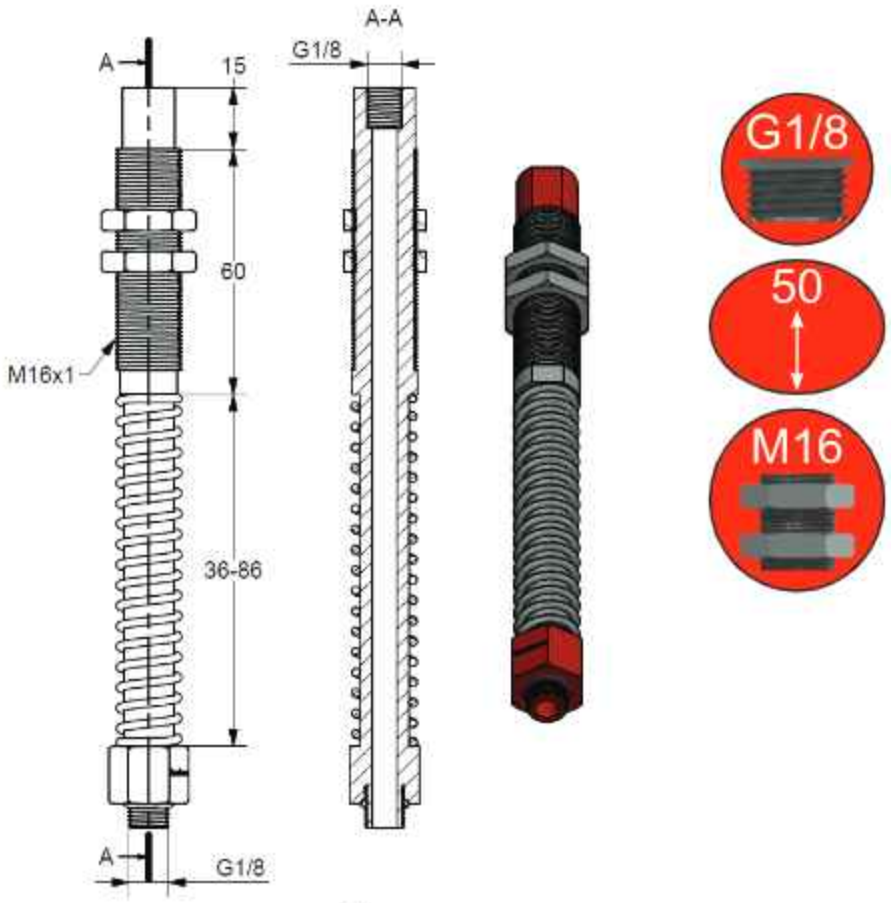

VFLCEXNR1850M16X50

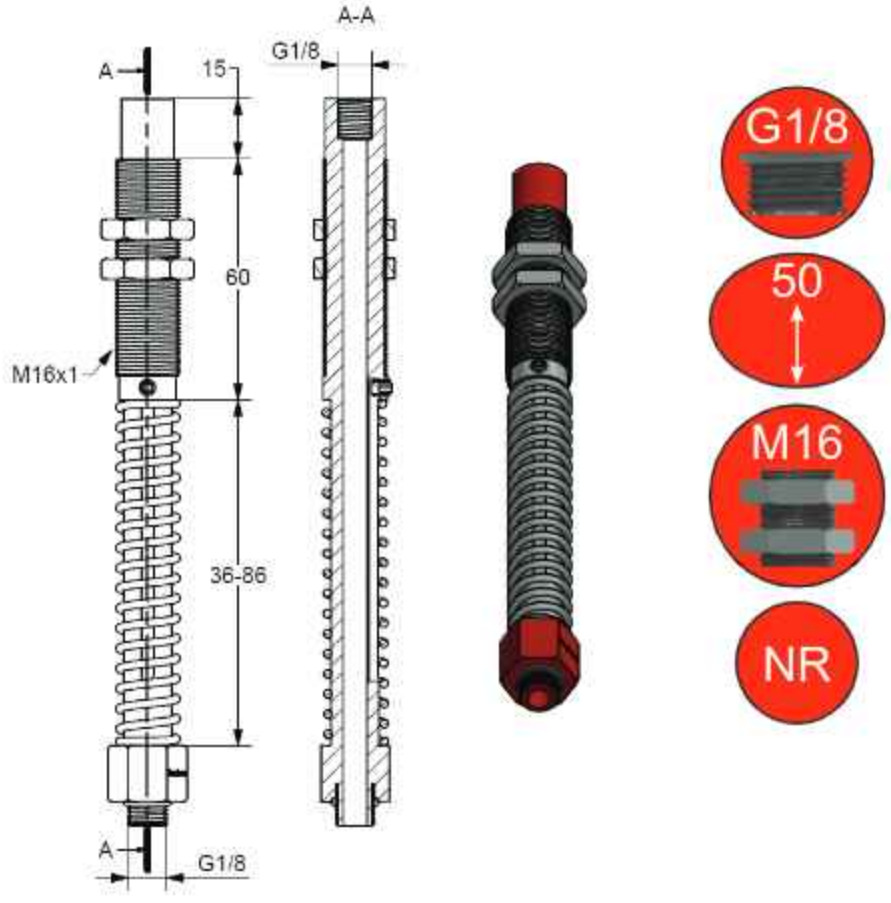

VACUUM CUP HOLDERS G1/8

VFLCEX1875M16X80

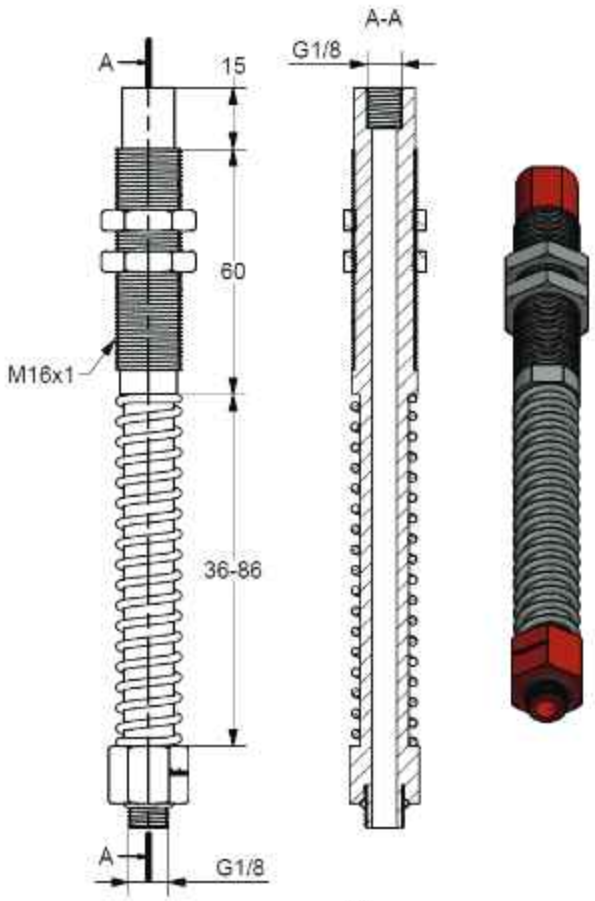

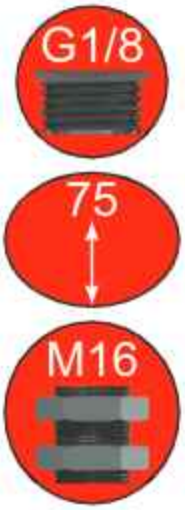

VFLCEXNR1875M16X80

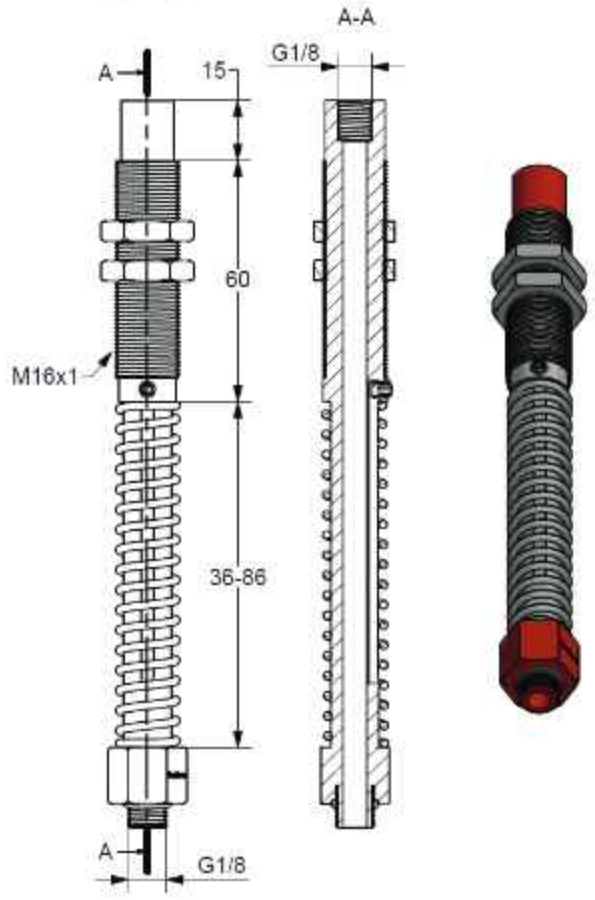

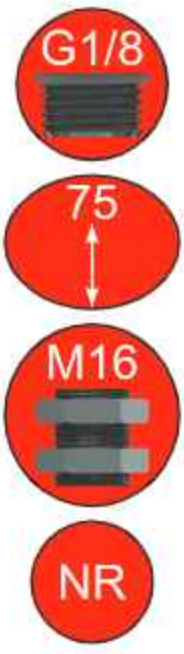

VFLCEX18100M16X80

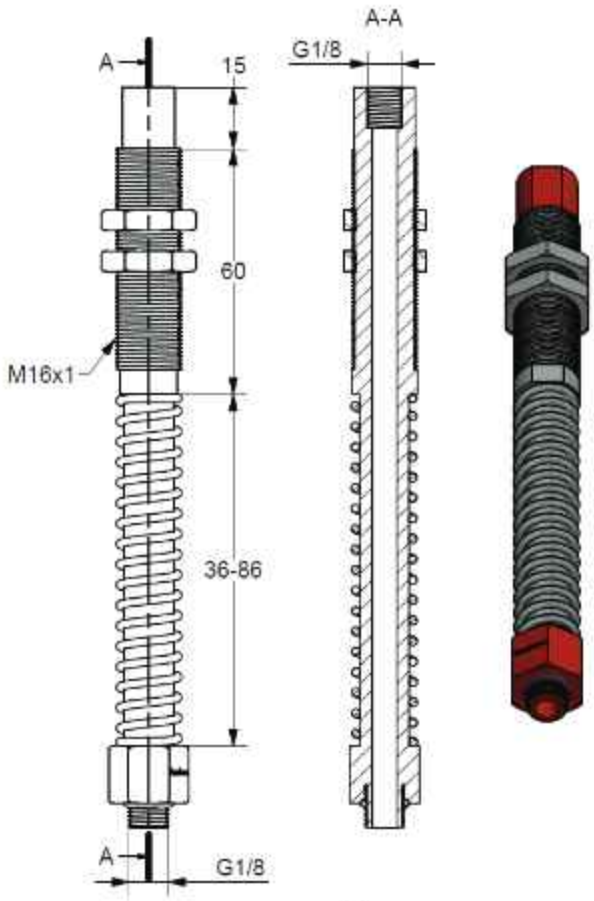

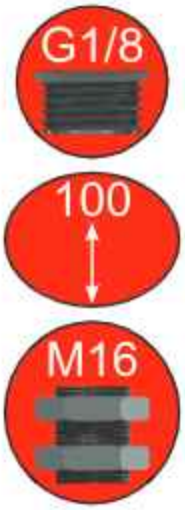

VFLCEXNR18100M16X80

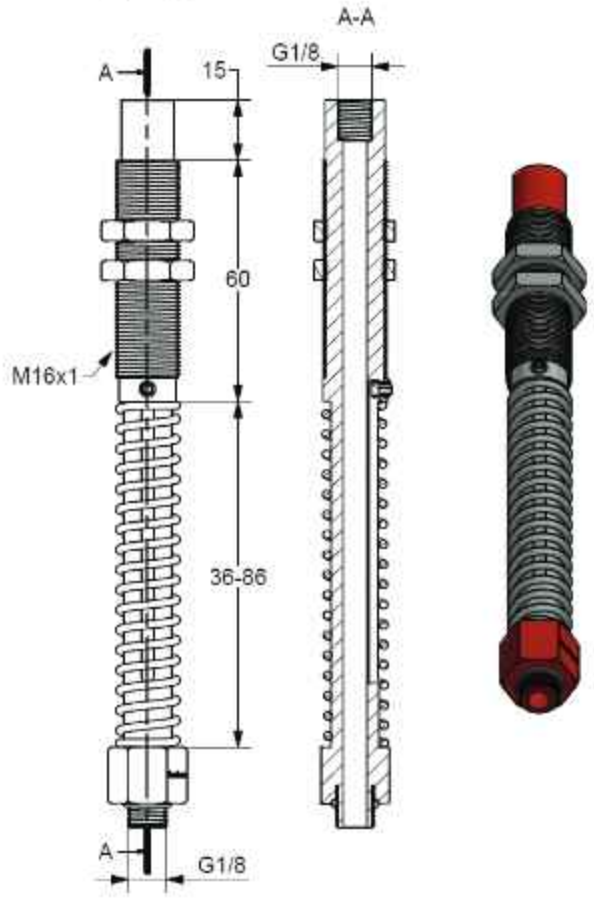

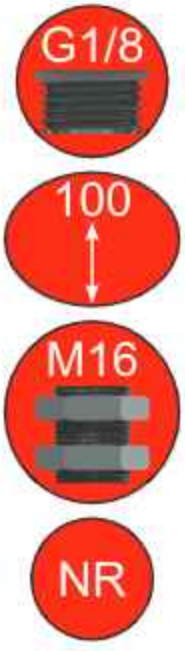

VACUUM CUP HOLDERS G1/4

VFLCEX1425M16X40

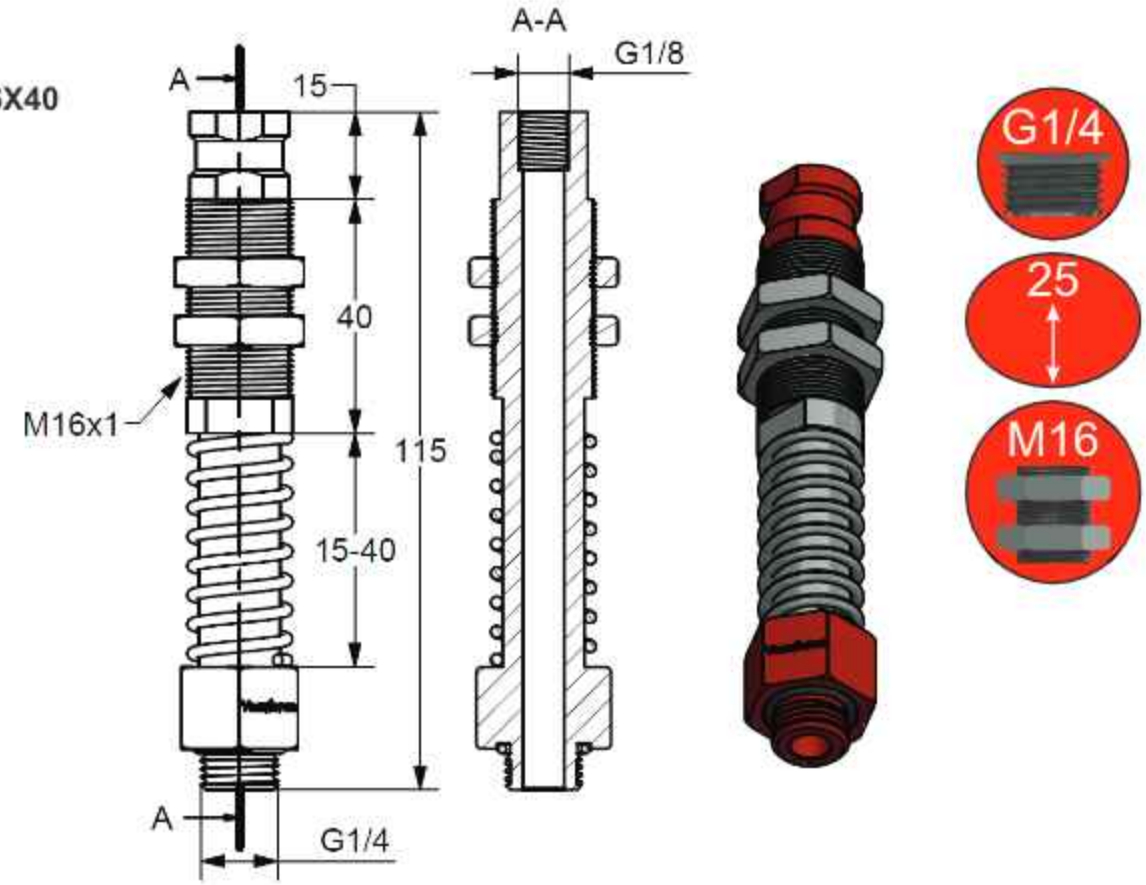

VFLCEXNR1425M16X40

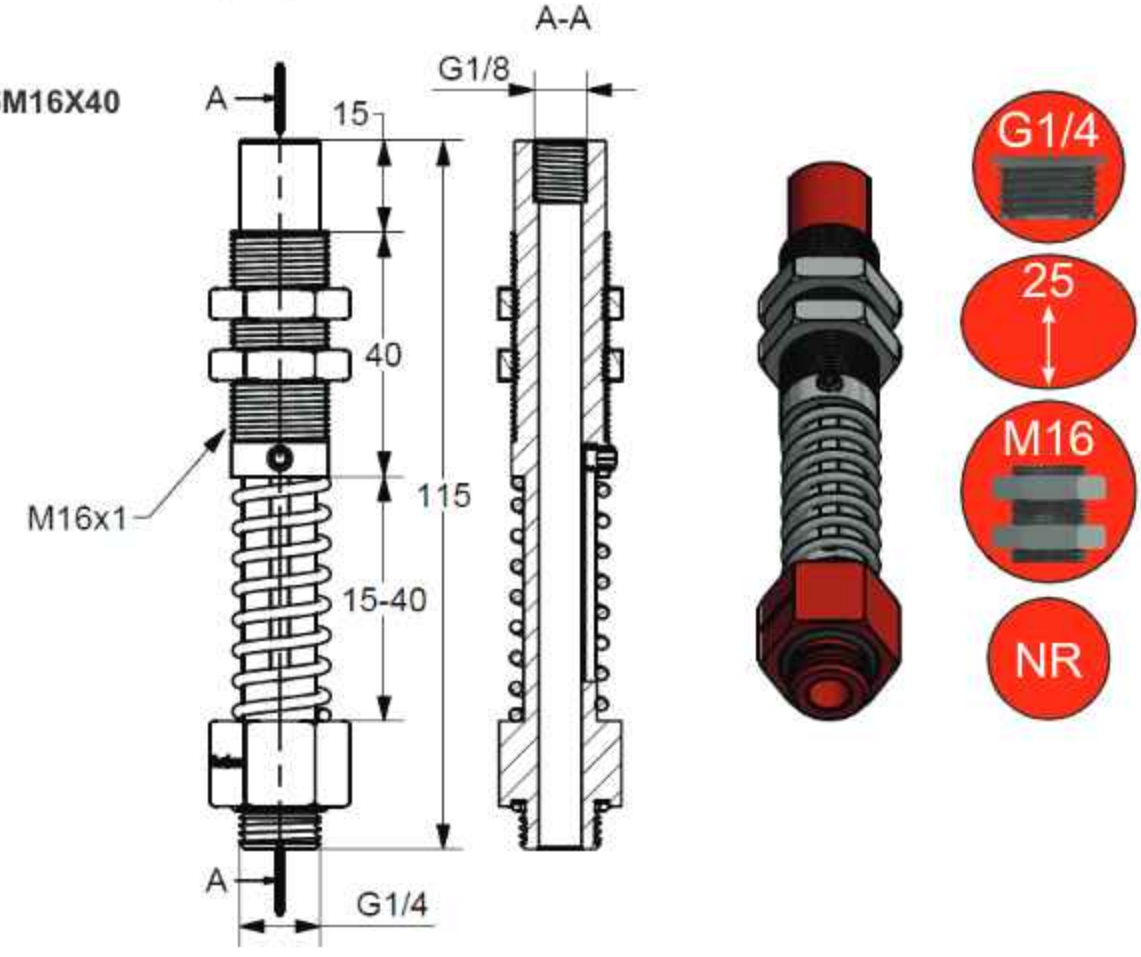

VFLCEX1425M18X40

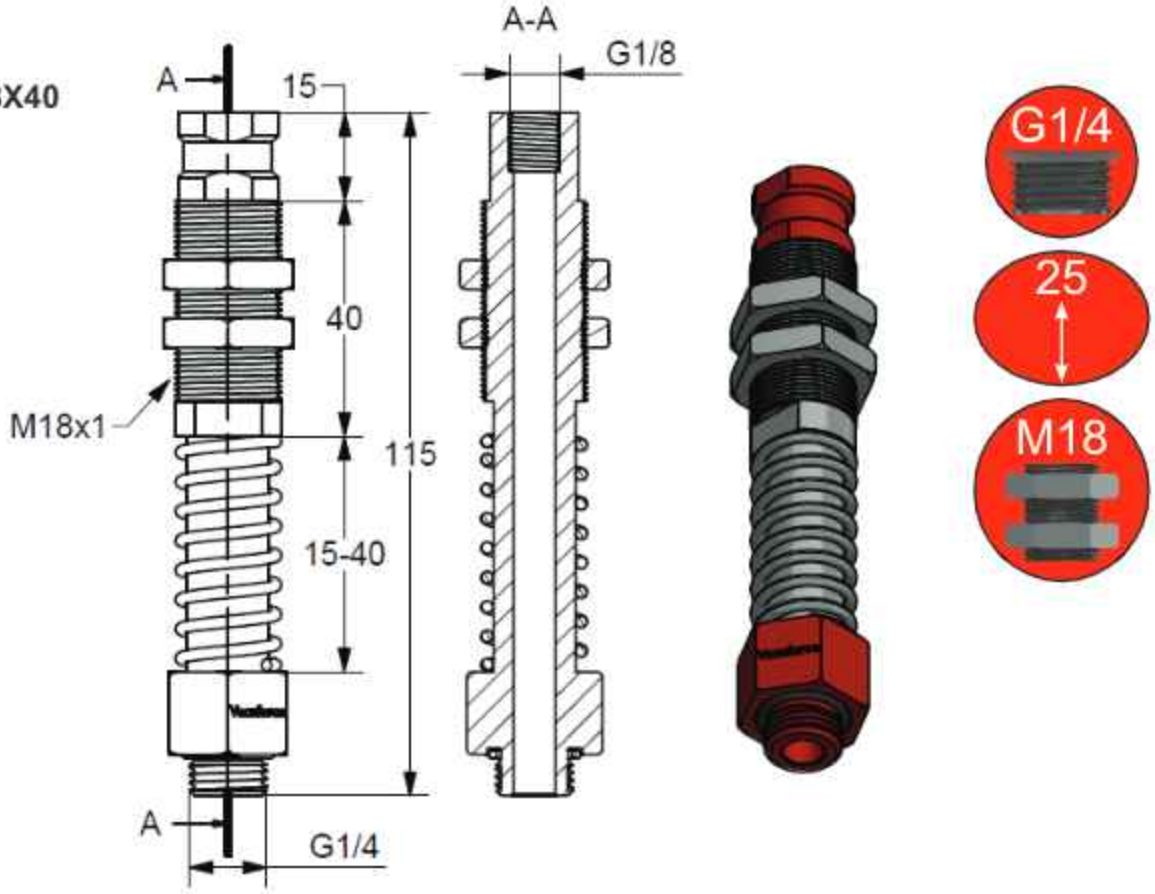

VFLCEXNR1425M18X40

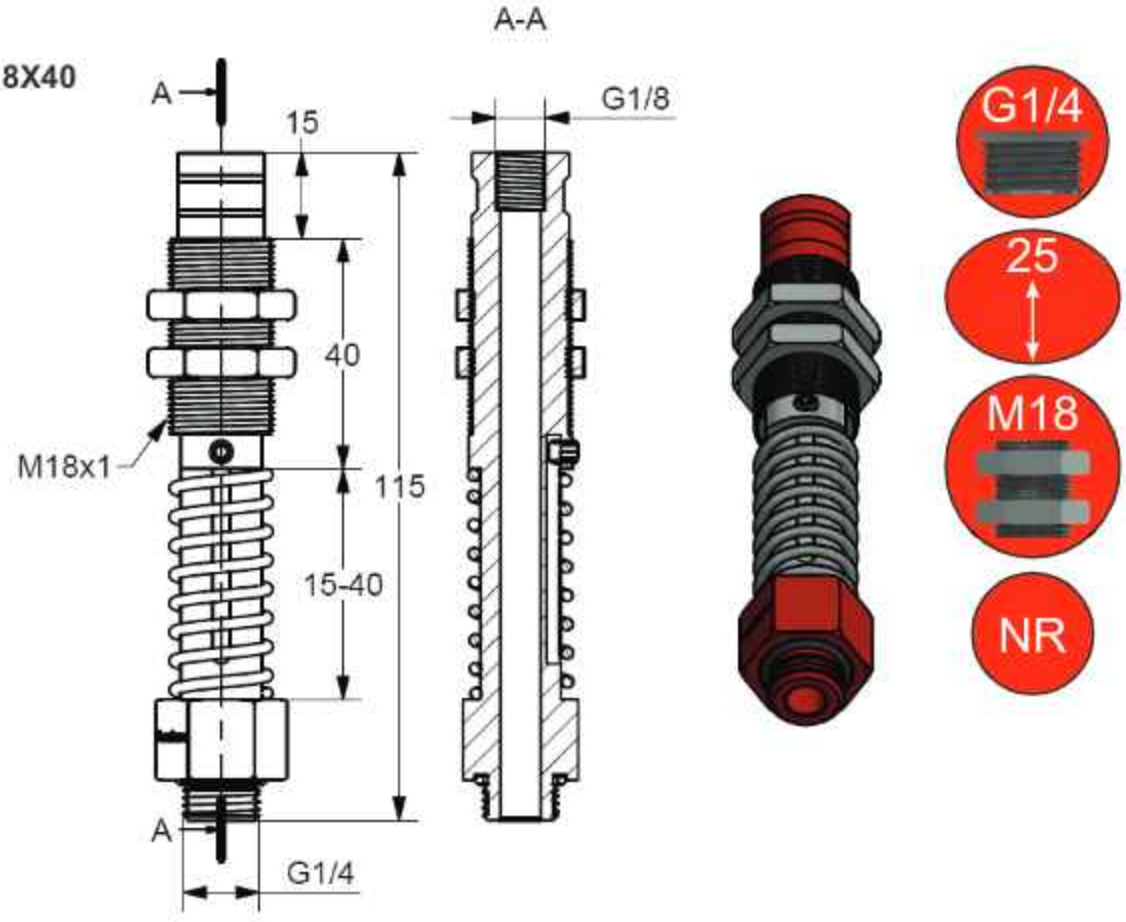

VACUUM CUP HOLDERS G1/4

VFLCEX1450M16X60

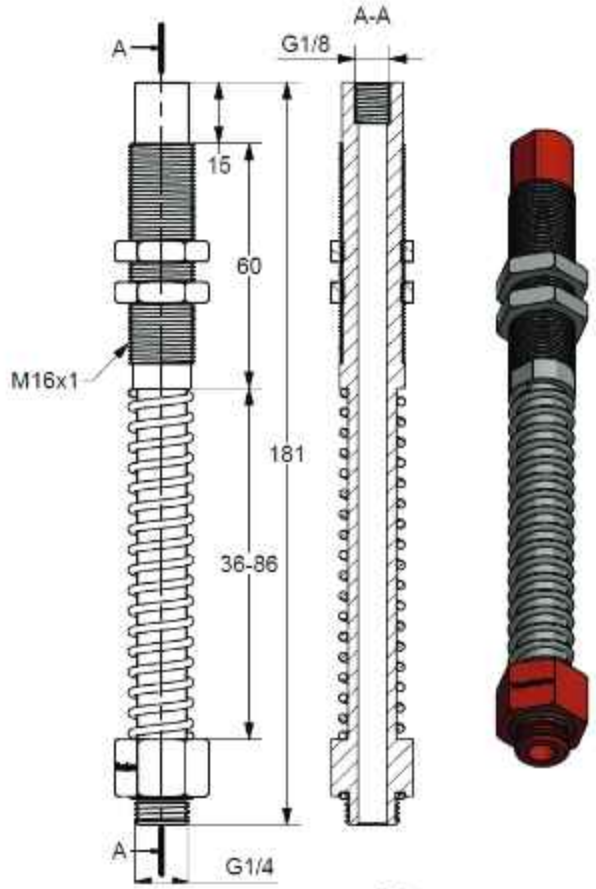

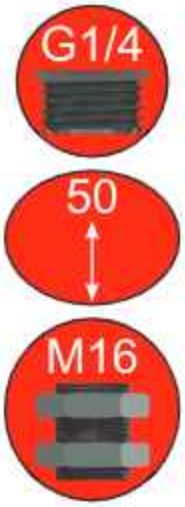

VFLCEXNR1450M16X60

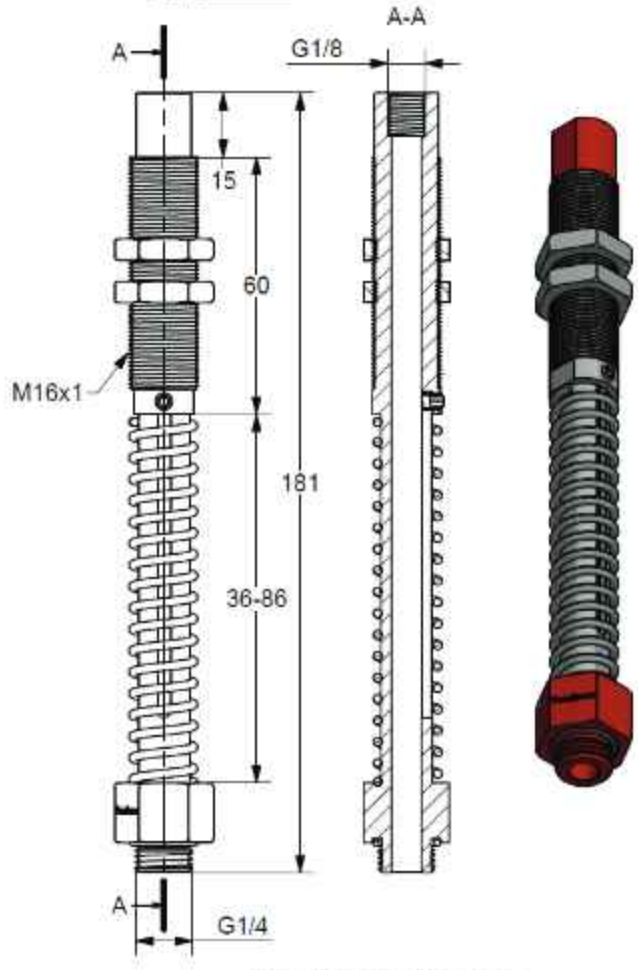

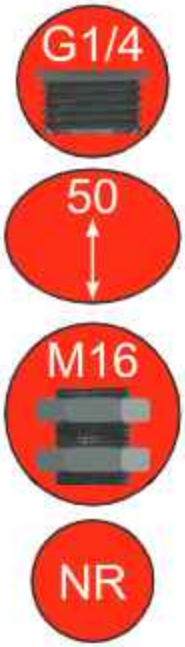

VFLCEX1450M18X60

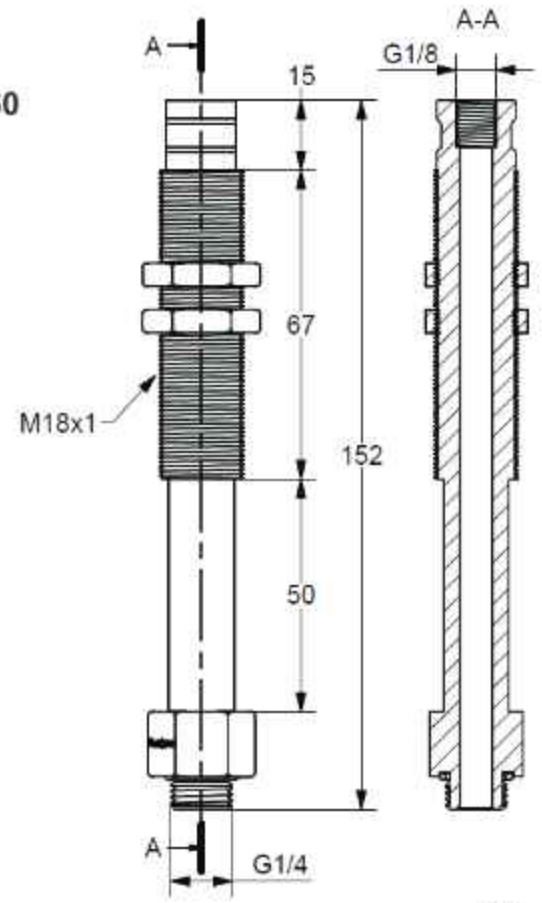



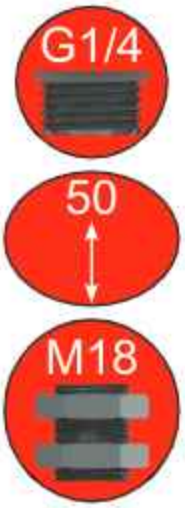

VFLCEXNR1450M18X60

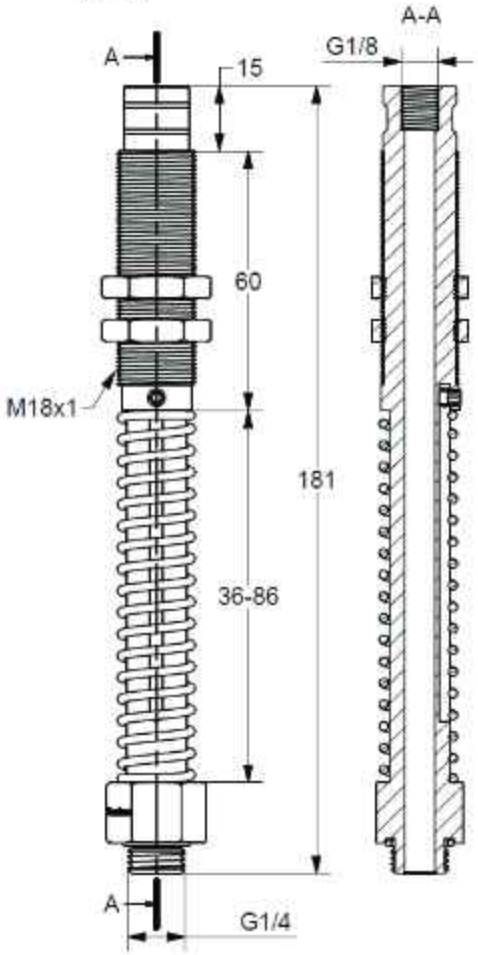



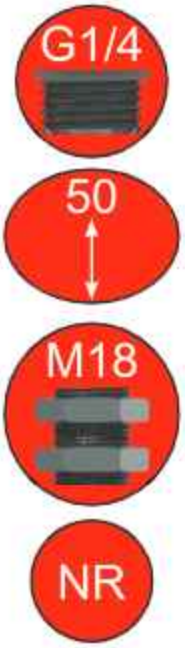

VACUUM CUP HOLDERS G1/4

VFLCEX1475M16X80

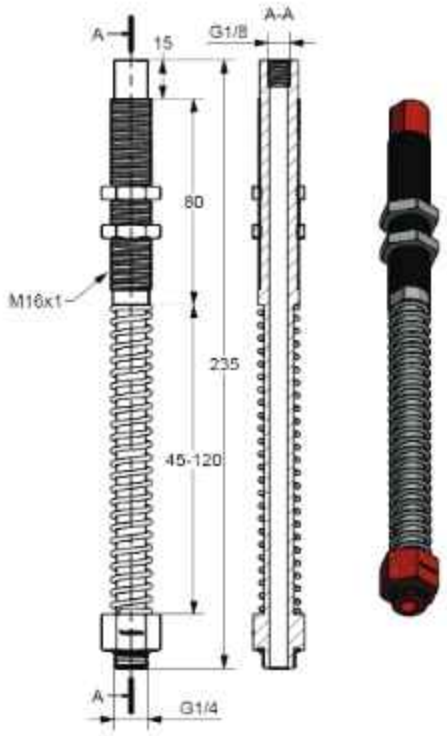

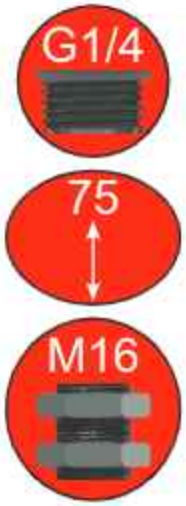

VFLCEXNR1475M16X80

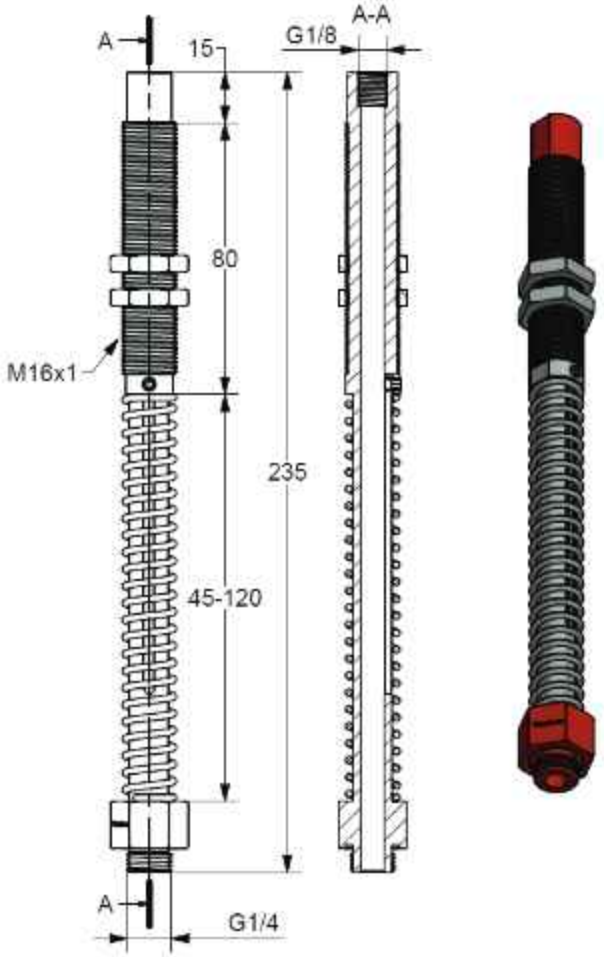

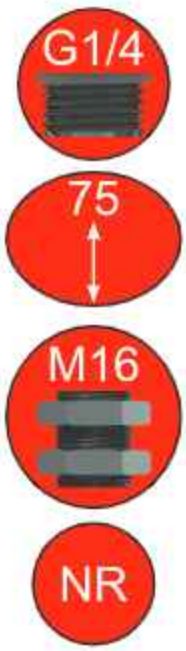

VFLCEX1475M18X80

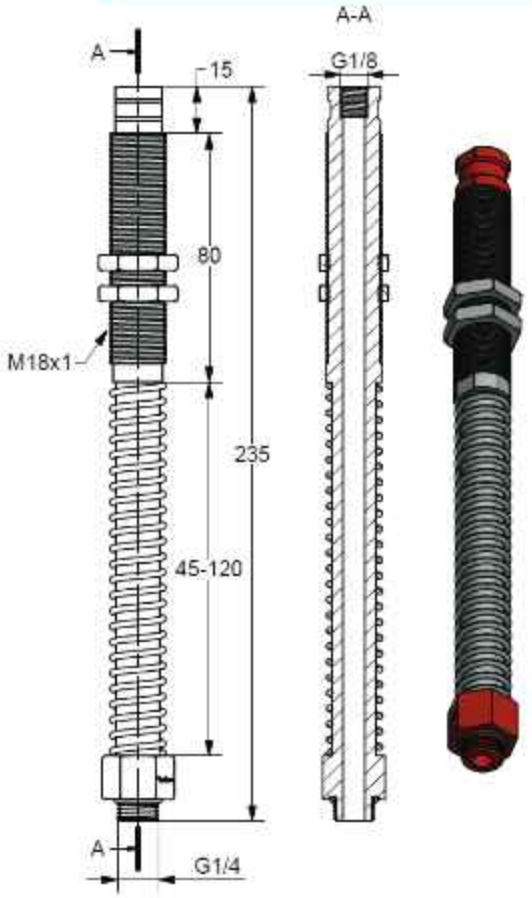

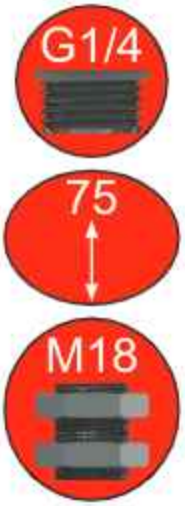

VFLCEXNR1475M18X80

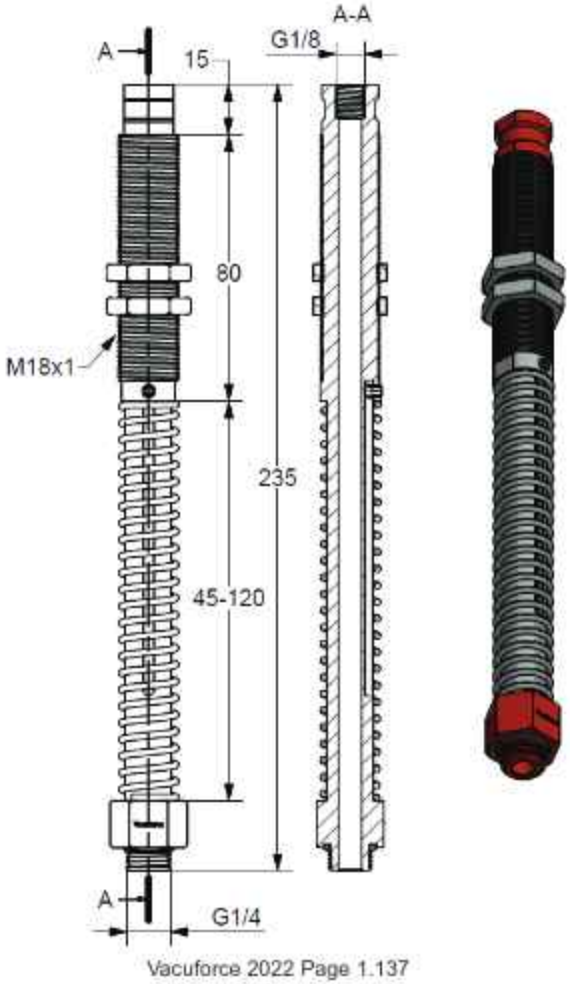

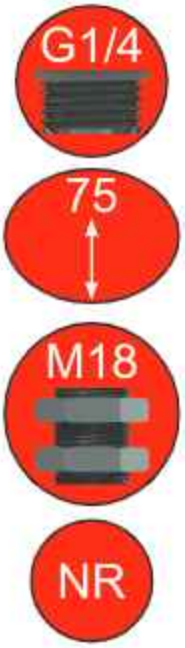

VACUUM CUP HOLDERS G1/4

VFLCEX14100M16X80

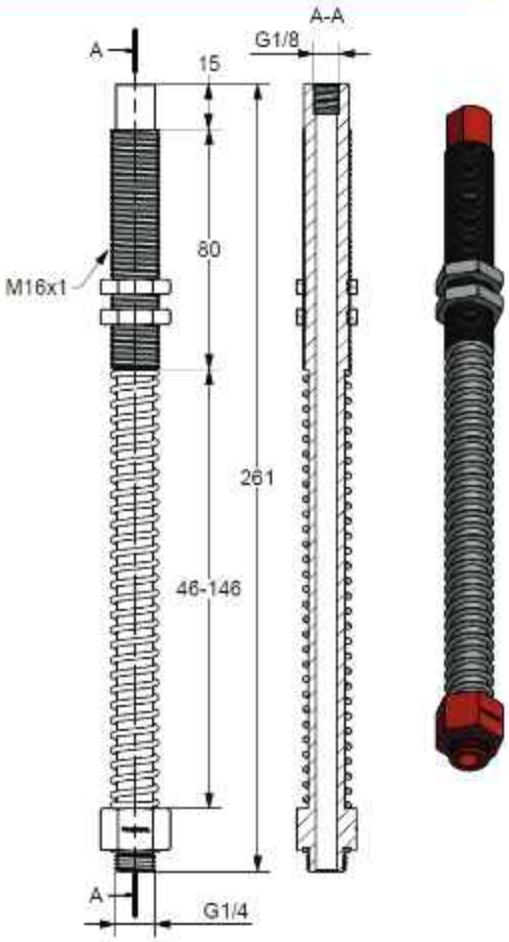

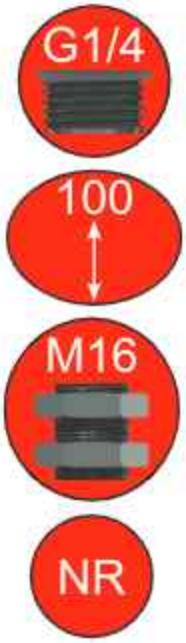

VFLCEXNR14100M16X80

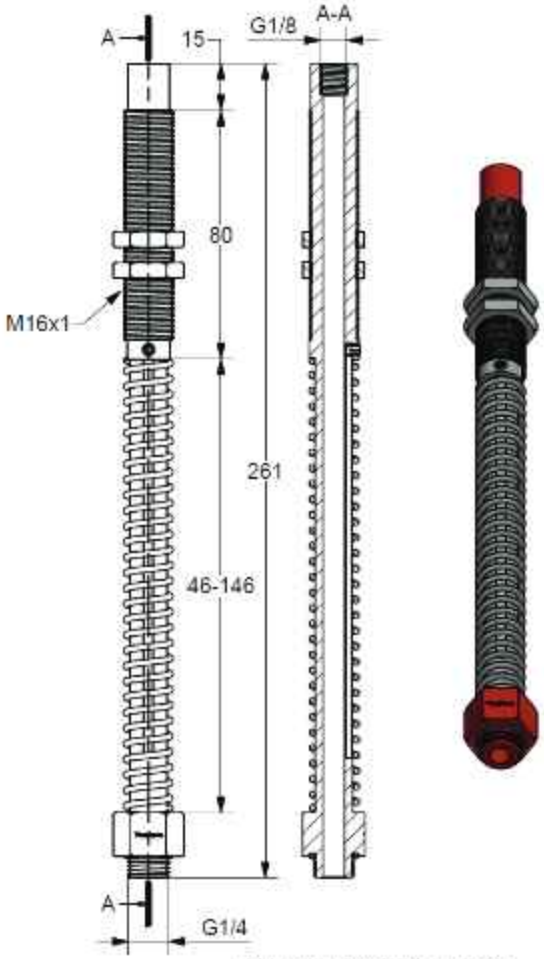

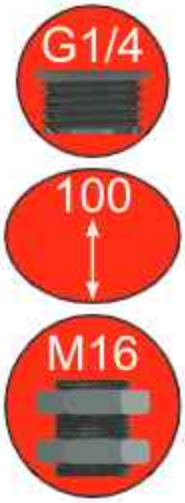

VFLCEXNR14100M18X80

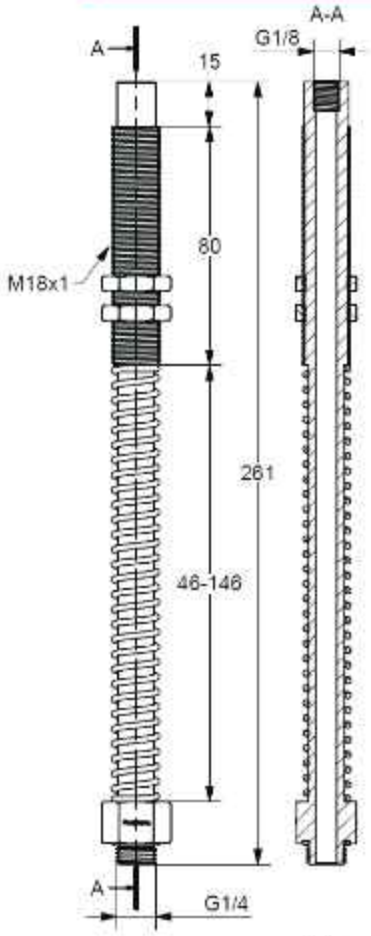



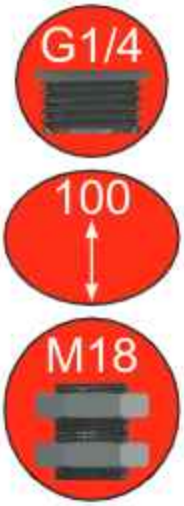

VFLCEX14100M18X80

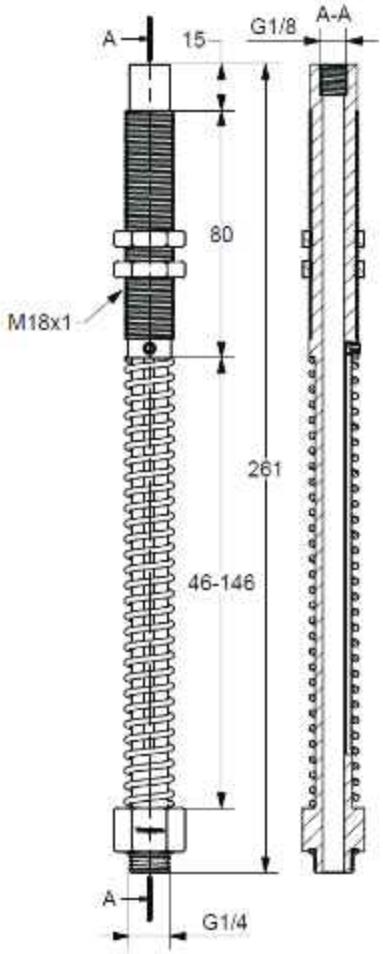



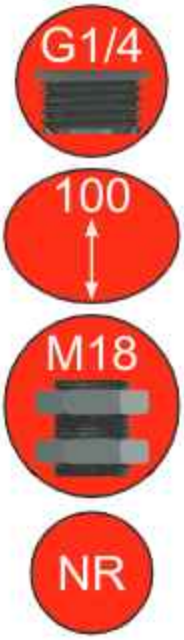

VFLCIN1425M18X42

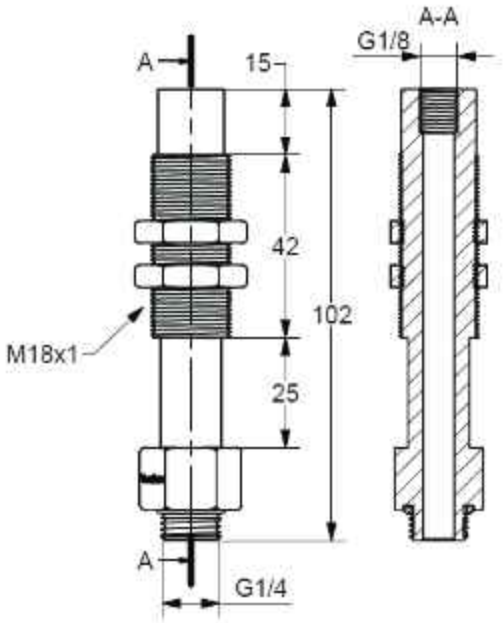



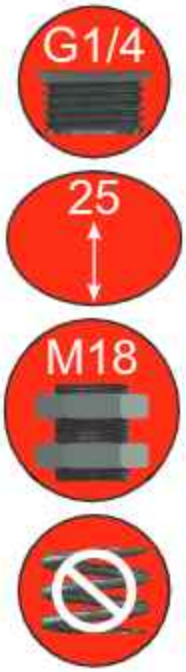

VFLCIN1450M18X67

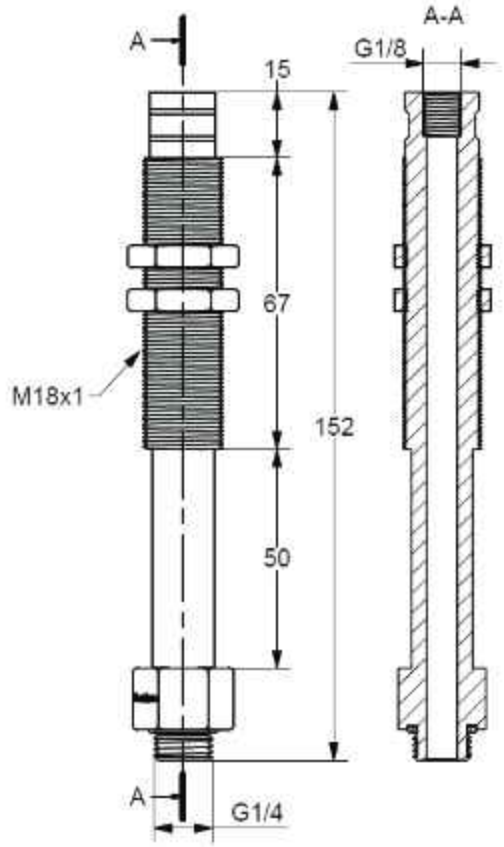



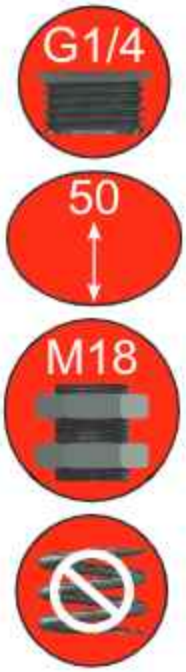

VFLCEX3825M18X40

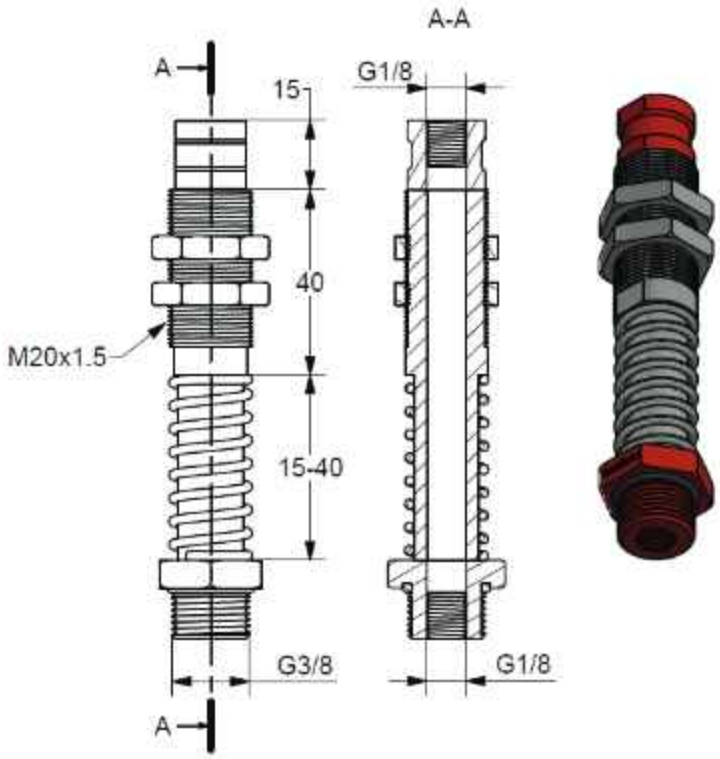

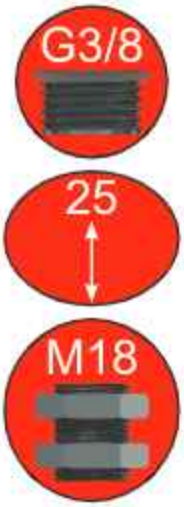

VFLCEXNR3825M18X40

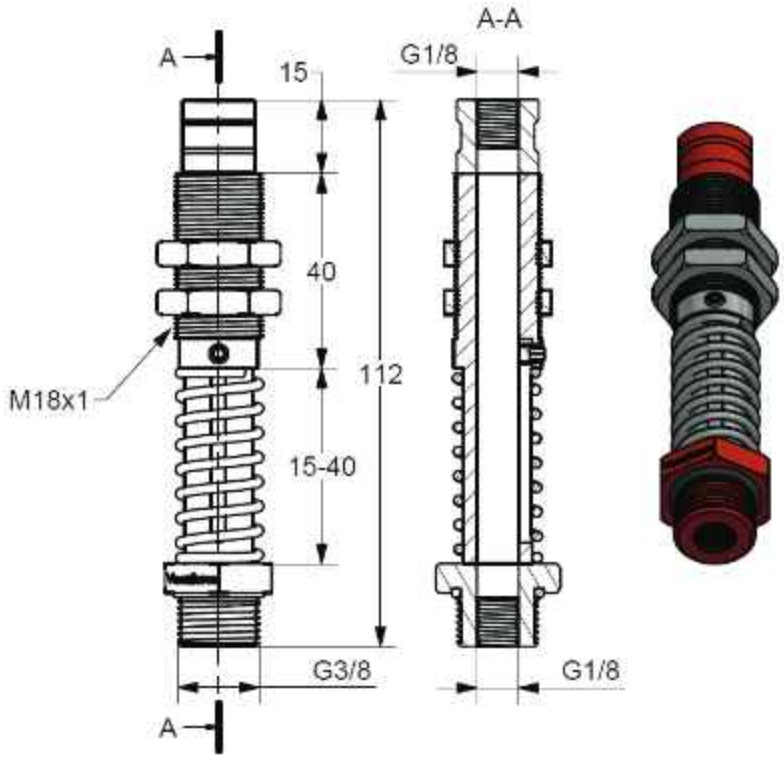

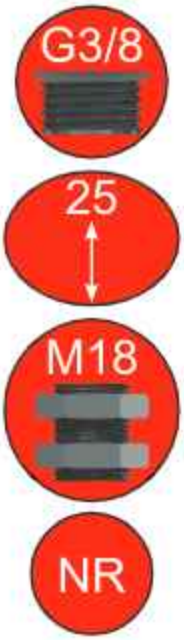

VFLCEX3825M20X40

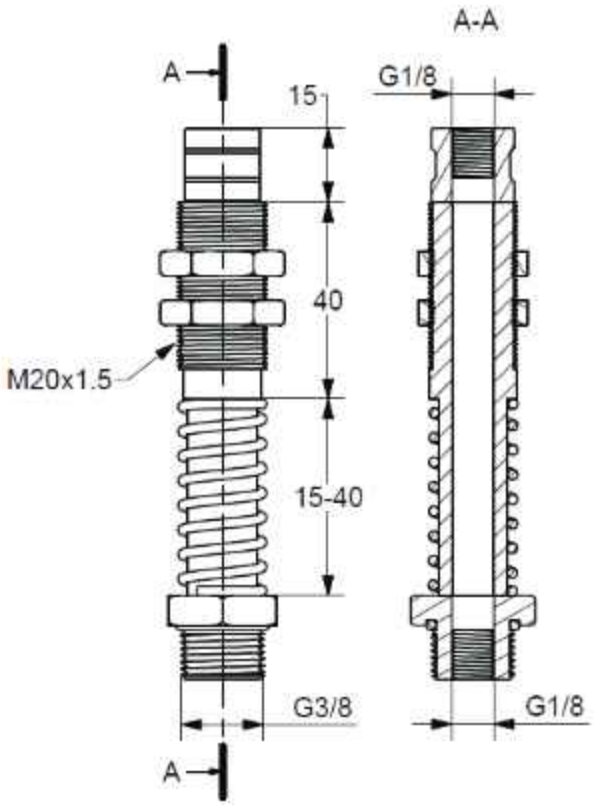



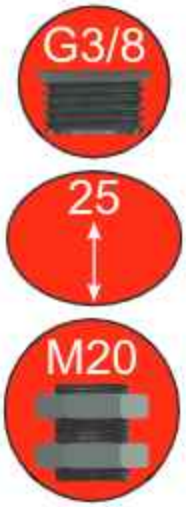

VFLCEX3850M18X60

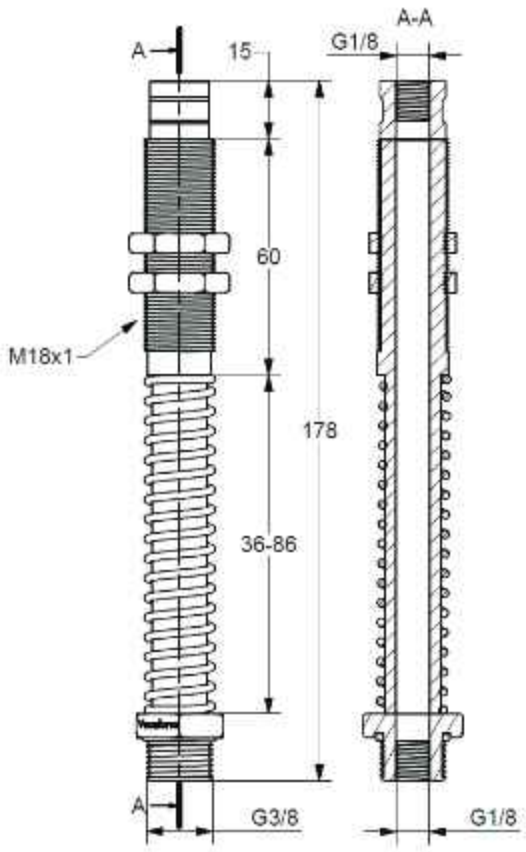



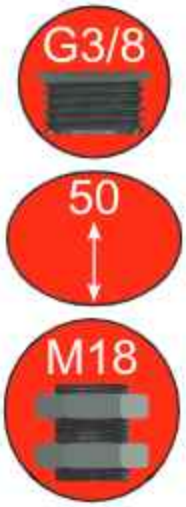

VFLCEXNR3850M18X60

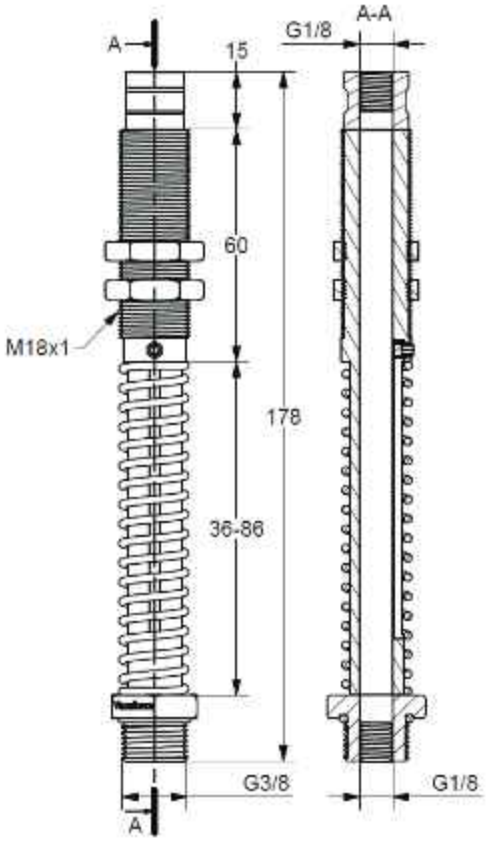



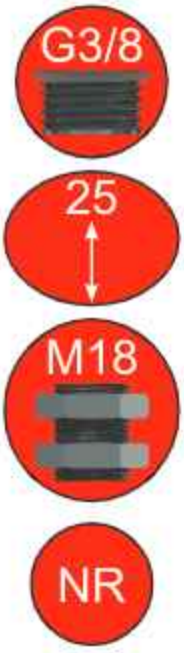

VFLCEX3850M20X60

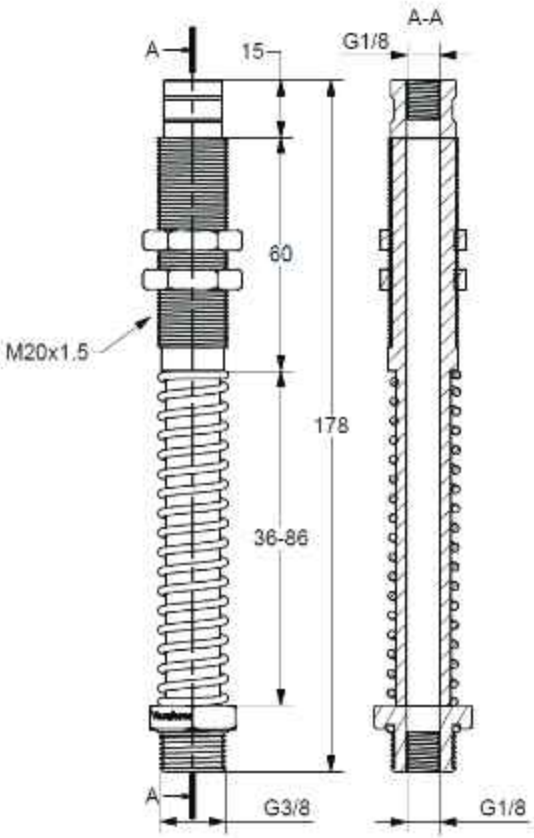



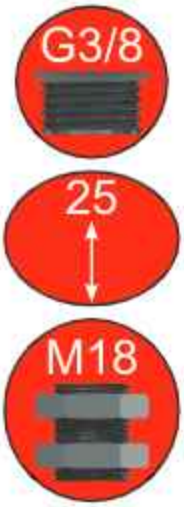

VACUUM CUP HOLDERS G3/8

VFLCEX3875M18X80

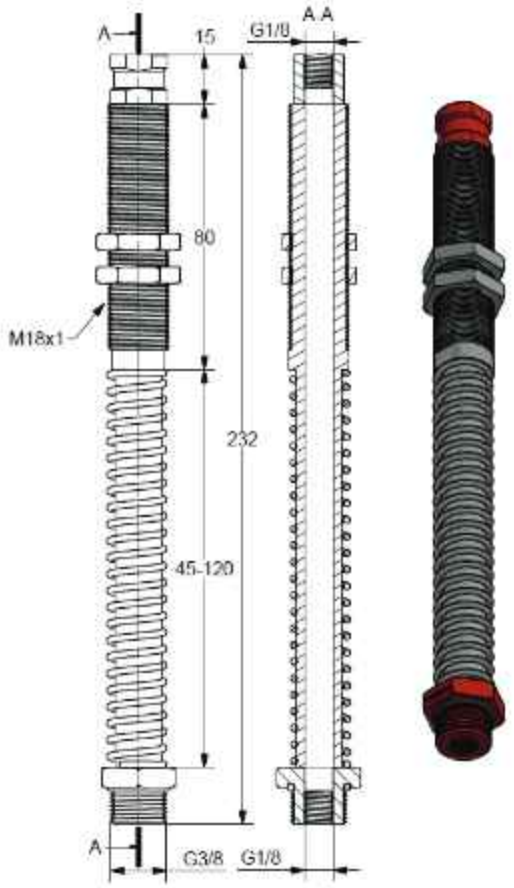

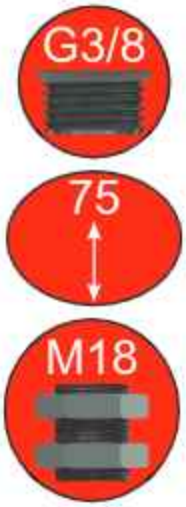

VFLCEXNR3875M18X80

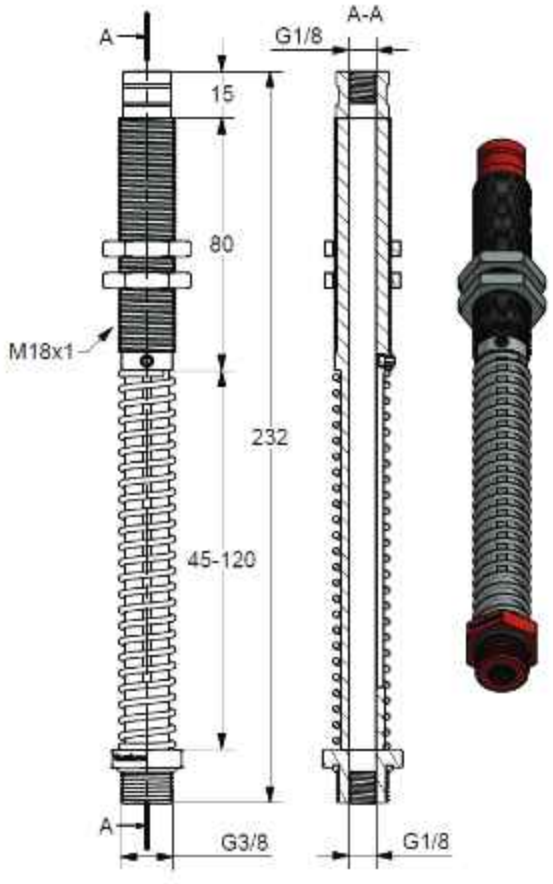

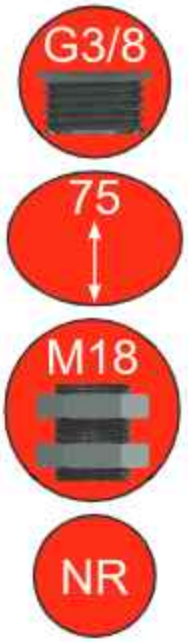

VFLCEX3875M20X80

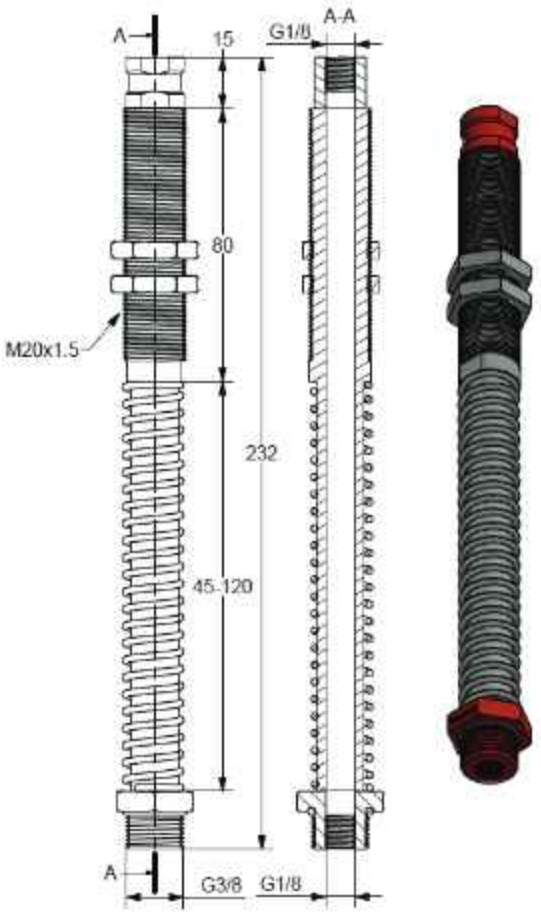

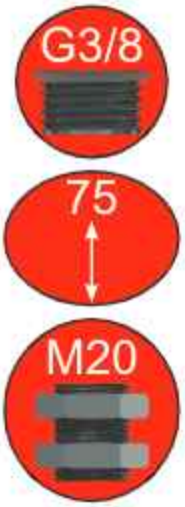

VFLCEX38100M18X80

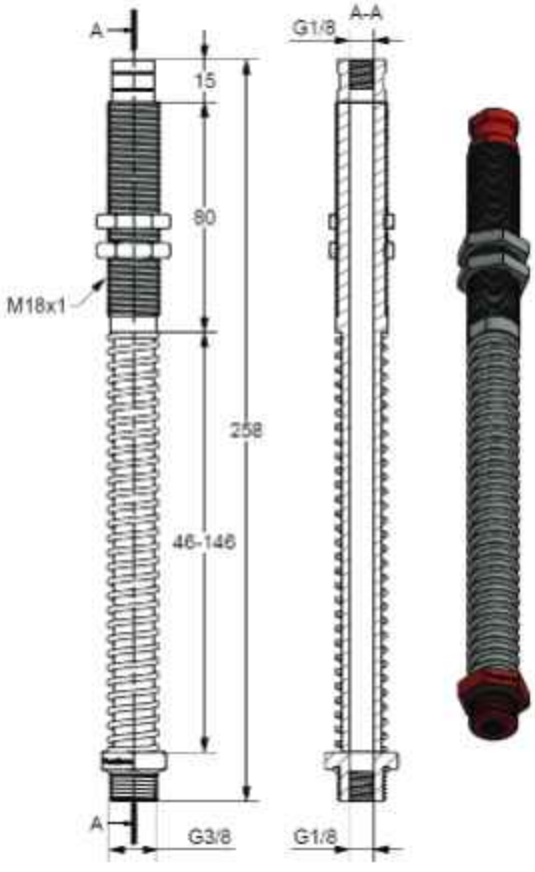

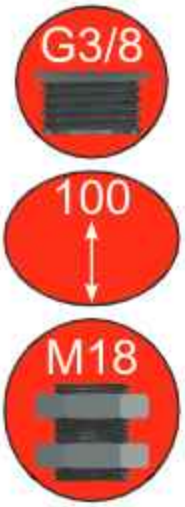

VFLCEXNR38100M18X80

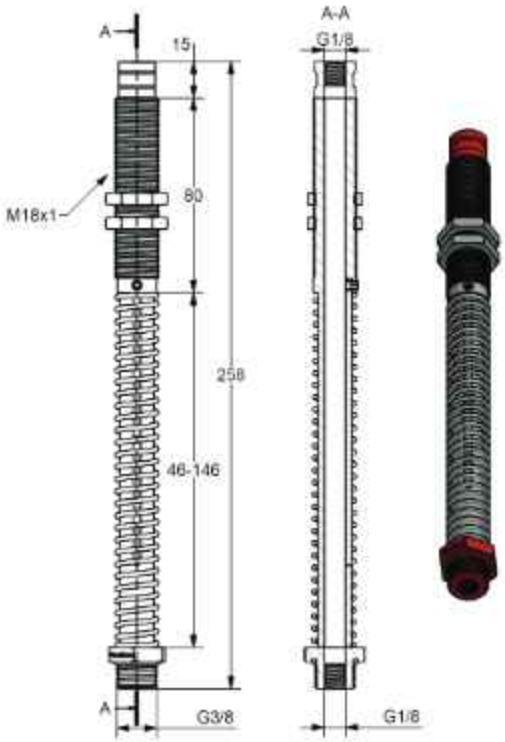

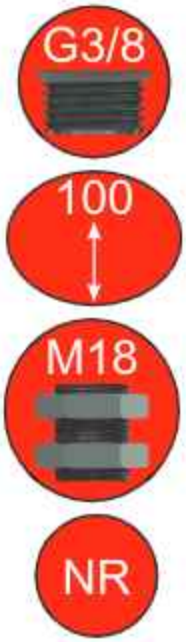

VFLCIN3850M18X67

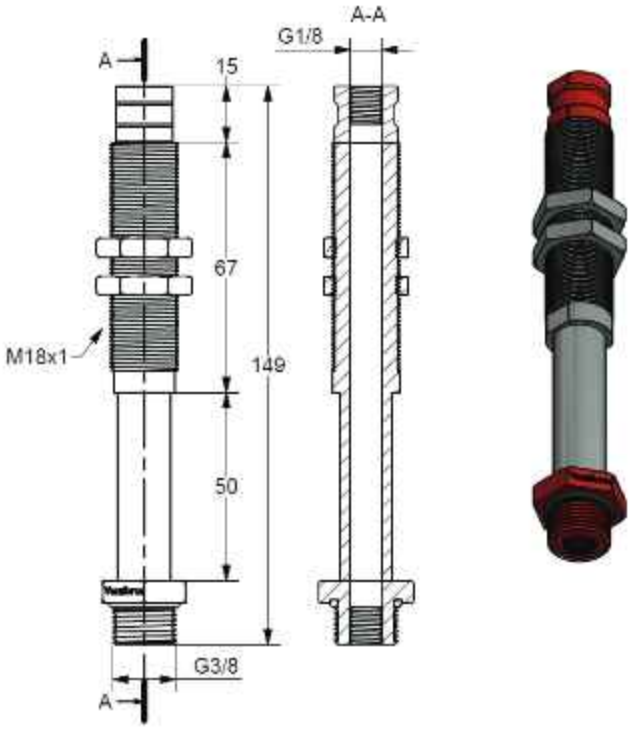

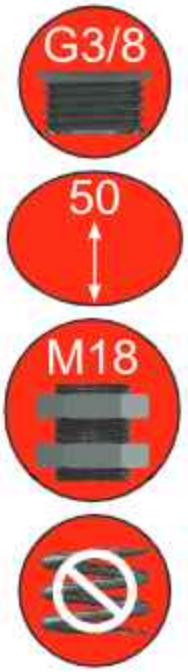

VFLCEX1225M20X40

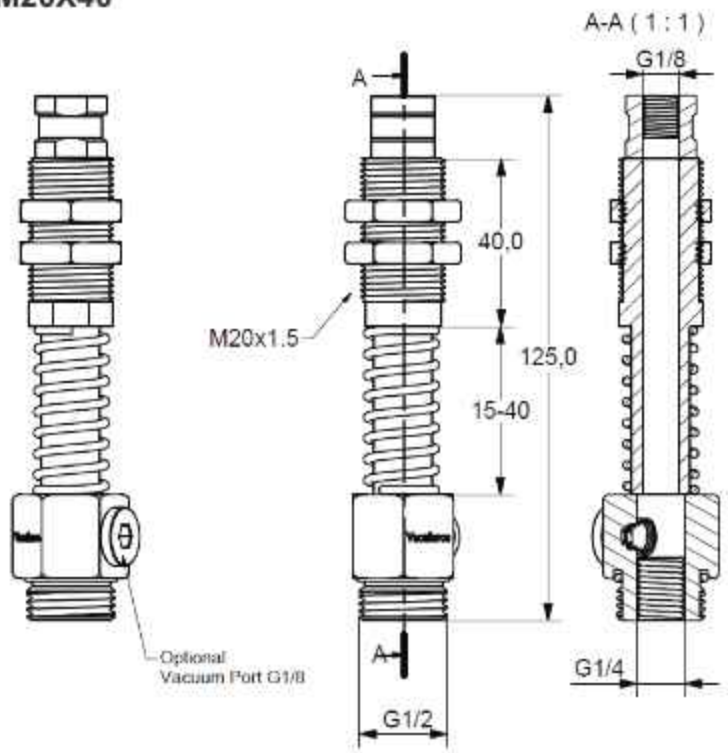



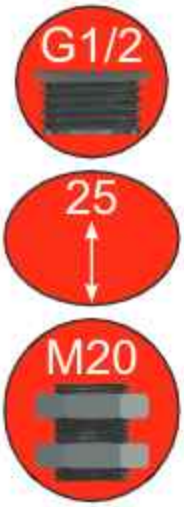

VFLCEX1250M20X60

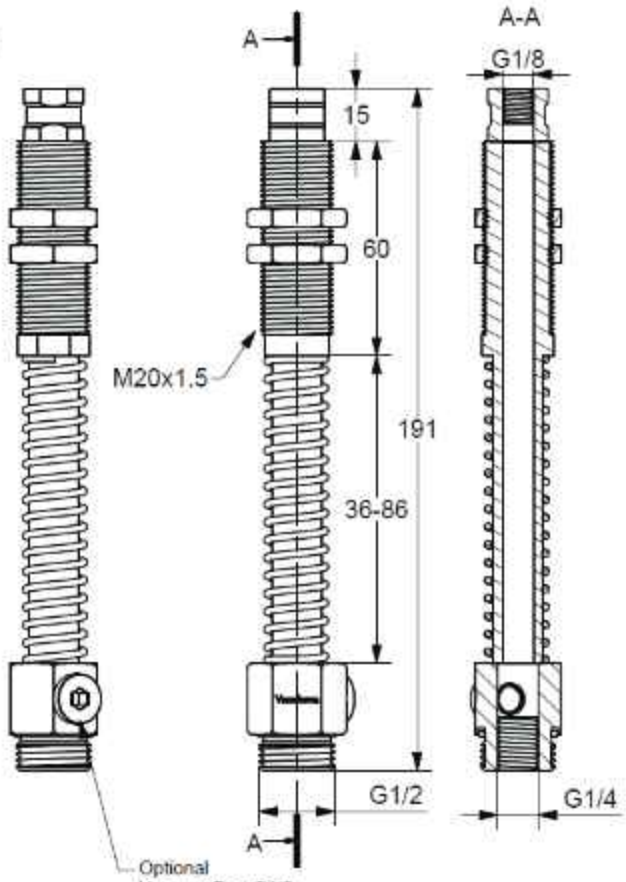



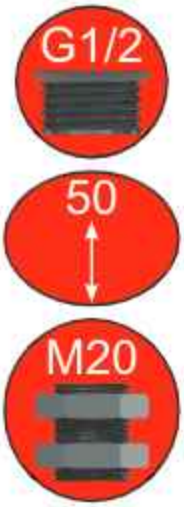

VFLCEX1275M20X80

