Engineering Specification

Job Name _____ Contractor _____

Job Location _____ Approval _____

Engineer _____ Contractor's P.O. No. _____

Approval _____ Representative _____

Large Duplex Strainers

Models: 691M, Class 125
692M, Class 150
Sizes: 8" – 16" (200 – 400mm)

Strainers provide economical protection for costly pumps, meters, valves, and other similar mechanical equipment by straining foreign matter from the connected piping system. Installation of a strainer before mechanical equipment can ensure trouble free service and avoid costly shutdowns for repair or replacement of equipment damaged by foreign matter. The size of the perforation or mesh in the basket screen will determine the smallest particles captured. See Strainer Information section of the Mueller Steam Specialty binder for detailed information including sizes and materials available.

Typical Service

- Duplex Strainers are designed for use in fluid handling systems where the flow cannot be shut down for basket cleaning.
- Typical services include cooling water, compressors, condensers, fire lines, fuel lines, lubrication systems, salt and fresh water systems, chemical process systems, pump suction service, and more.
- Consider strainer body and screen material as well as gasket and seat materials for suitability for particular service.

Features

- One gear operator actuates both diverter valves.
- Gear mechanism is enclosed, protecting it from corrosion.
- Shaft and internals are made of Stainless Steel.
- Discs and seats are available in Stainless Steel or Bronze.
- All internal parts are field replaceable.

Construction

- All body parts are heavy castings.
- Covers are bolted, clamped covers are available (limited to 150psi, 100ºF).

Baskets

- Gasketed and seated to prevent particle bypass around the basket.
- Large Open Area Ratios ensure minimum pressure drop across the unit.
- See Technical Data section of the Mueller Steam Specialty Engineering binder.



Models: 691, 692

Pressure/Temperature–Non-Shock (with Clamped Covers)		
		CWP
691MFA	8"-16"	150psi @ 150°F (10.3 bar @ 38°C)
692MFB	8"-16"	150psi @ 150°F (10.3 bar @ 38°C)
692MFD	8"-16"	150psi @ 150°F (10.3 bar @ 38°C)
692MFH	8"-16"	150psi @ 150°F (10.3 bar @ 38°C)

Pressure/Temperature–Non-Shock (with Bolted Covers)	
691MFA	
8"-12" CWP 150 PSI @ 150°F (10.3 bar @ 38°C) 150 PSI @ 250°F	14"-16" CWP 150psi @ 150°F (10.3 bar @ 38°C) 150psi @ 250°F
692MFB	
8"-12" CWP 200 PSI @ 150°F (15.5 bar @ 38°C) 175 PSI @ 250°F	14"-16" CWP 150psi @ 150°F (10.3 bar @ 38°C) 150psi @ 250°F
692MFD	
8"-12" CWP 200 PSI @ 150°F (15.5 bar @ 38°C) 175 PSI @ 250°F	14"-16" CWP 150psi @ 150°F (10.3 bar @ 38°C) 150psi @ 250°F
692MFH	
8"-12" CWP 200 PSI @ 100°F (19 bar @ 38°C) 80 PSI @ 400°F	14"-16" CWP 150psi @ 150°F (10.3 bar @ 38°C) 150psi @ 250°F

Max. temp. can be limited by gasket and seat material. Consult factory.

NOTICE

The information contained herein is not intended to replace the full product installation and safety information available or the experience of a trained product installer. You are required to thoroughly read all installation instructions and product safety information before beginning the installation of this product.

Mueller Steam Specialty product specifications in U.S. customary units and metric are approximate and are provided for reference only. For precise measurements, please contact Mueller Steam Specialty Technical Service. Mueller Steam Specialty reserves the right to change or modify product design, construction, specifications, or materials without prior notice and without incurring any obligation to make such changes and modifications on Mueller Steam Specialty products previously or subsequently sold.

Mueller Steam Specialty™

A WATTS Brand

Standard (Water)			
Model	**Sizes**	**Material**	**Opening**
691MFA 692MFB 692MFD 692MFH	8" - 16"	304SS	.125 perf

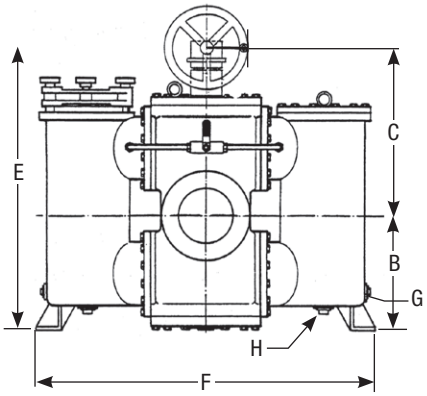

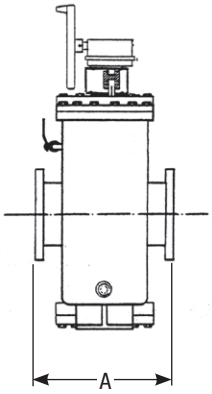

Models: 691, 692

Material

	691MFA	692MFB	692MFD	692MFH
Body	Cast Iron ASTM A126 B	Aluminum Bronze ASTM B148	Carbon Steel ASTM A216 WCB	Stainless Steel ASTM A351 CF8M
Cover	Plate A516-70	Bronze Plate	Carbon Steel Plate 516-70	Stainless Steel Plate A240-316
Seat	Bronze	Bronze	Bronze	A351-CF8M
Shaft	316SS	316SS	316SS	316SS
O-ring Seals	Buna-N	Buna-N	Buna-N	Buna-N

For stainless steel pickling and passivation available upon request. Consult factory.

Dimensions and Weights

SIZE		DIMENSIONS														WEIGHT		CV VALUE
		A		B		C		E Screen Removal		F		G (NPT)		H (NPT)				
in.	*mm*	*in.*	*mm*	*in.*	*mm*	*in.*	*mm*	*in.*	*mm*	*in.*	*mm*	*in.*	*mm*	*in.*	*mm*	*lbs.*	*kgs.*	
8	200	20	508	19	483	24 9/16	623	62	1575	54 3/4	1391	1	25	2	50	1365	620	650
10	250	24	610	20 1/2	521	28 3/4	730	72 1/2	1842	61	1549	1	25	2	50	1970	894	960
12	300	30	762	25 1/2	648	30 3/4	781	87 1/2	2223	65 7/8	1673	1	25	2	50	2800	1272	1450
14	350	32	813	27 7/8	708	30 1/8	765	95 1/2	2426	71	1803	1	25	2	50	3300	1500	2000
16	400	36 3/4	933	32	813	34 3/4	883	80 1/2	2045	80 1/2	2045	1 1/2	40	2	50	4400	2000	2500

Apply For Certified Drawings.

Note: Handwheel dimension is 18".

Limited Warranty: Mueller Steam Specialty warrants each product to be free from defects in material and workmanship under normal usage for a period of one year from the date of original shipment. In the event of such defects within the warranty period, the Company will, at its option, replace or recondition the product without charge. This shall constitute the sole and exclusive remedy for breach of warranty, and the Company shall not be responsible for any incidental, special or consequential damages, including without limitation, lost profits or the cost of repairing or replacing other property which is damaged if this product does not work properly, other costs resulting from labor charges, delays, vandalism, negligence, fouling caused by foreign material, damage from adverse water conditions, chemical, or any other circumstances over which the Company has no control. This warranty shall be invalidated by any abuse, misuse, misapplication or improper installation of the product. **THIS WARRANTY IS IN LIEU OF ALL OTHER WARRANTIES, EXPRESS OR IMPLIED, INCLUDING ANY IMPLIED WARRANTIES OF MERCHANTABILITY OR FITNESS FOR A PARTICULAR PURPOSE.** Any implied warranties that are imposed by law are limited in duration to one year.

Some States do not allow limitations on how long an implied warranty lasts, and some States do not allow the exclusion or limitation of incidental or consequential damages. Therefore the above limitations may not apply to you. This Limited Warranty gives you specific legal rights, and you may have other rights that vary from State to State. You should consult applicable state laws to determine your rights.

Mueller Steam Specialty™

A WATTS Brand

USA: T: (800) 334-6259 • F: (800) 421-6772 • MuellerSteam.com
Latin America: T: (52) 55-4122-0138 • MuellerSteam.com

© 2021 Watts