Engineering Specification

Job Name _____ Contractor _____

Job Location _____ Approval _____

Engineer _____ Contractor's P.O. No. _____

Approval _____ Representative _____

Ball-Plex™ Carbon Steel Flanged Ends Duplex Strainers

Models: 792MFD, Class 150
794MFD, Class 300
**796MFD, Class 600

Sizes: 2" – 6" (50 – 150mm)

Strainers provide positive and inexpensive protection for costly pumps, meters, valves, and other similar mechanical equipment by straining foreign matter from the connected piping system. Installation of a strainer before mechanical equipment can ensure trouble free service and avoid costly shutdowns for repair or replacement of equipment damaged by foreign matter. The size of the perforation or mesh in the basket screen will determine the smallest particles captured. See Strainer Information section of the Mueller Steam Specialty Engineering binder for detailed information including sizes and materials available.

Typical Service

- Duplex Strainers are designed for use in fluid handling systems where the flow cannot be shut down for basket cleaning.
- Typical services include cooling water, compressors, condensers, fire lines, fuel lines, lubrication systems, salt and fresh water systems, chemical process systems, pump suction service, and more.
- Consider strainer body and screen material as well as gasket and seat materials for suitability for particular service.

Features

- Ball-Plex™ Duplex Strainers use 3-way balls as the diverter valves.
- Balls are 316SS for corrosion resistance, strength, and resistance to build-up of solids on the balls' surfaces.
- PTFE seats provide bubble-tight sealing, superior to metal seats in other designs. This eliminates potentially dangerous leakage into the chamber being cleaned.
- The pressurized chamber in use is covered by the handle. This prevents accidental opening of the pressurized chamber, and allows easy access to the chamber to be cleaned.
- NEW! Three Piece Design!
- Center body casting holds all moving parts. Baskets housings are identical and symmetrical around the body.
- After removal of either basket housing, all internal components are easily accessible for service, even with the unit still installed in line.

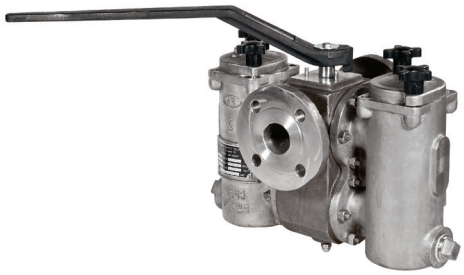

Model 792MFD

Pressure/Temperature - Non-Shock		
Model	**Material**	**Rating**
792MFD	Carbon Steel	285psi @ -20 to 100°F 19.6 bar @ 38°C 260psi @ 200°F 17.7 Bar @ 100°C
794MFD	Carbon Steel	740 psi @ -20 to 100°F 51.1 bar @ 38°C 680psi @ 200°F 46.6 bar @ 100°C
796MFD	Carbon Steel	740psi @ -20 to 100°F 51.1 bar @ 38°C 680psi @ 200°F 46.6 bar @ 100°C

* Max. temp. can be limited by gasket and seat material. Consult factory.

Baskets

- Large open area ratios ensure minimum pressure drop across the unit.
- See Pressure Drop Charts in the Technical Data section of the Mueller Steam Specialty Engineering binder.

		STANDARD (WATER)	
MODEL	**SIZES**	**MATERIAL**	**OPENING**
792MFD, 794MFD, 796MFD	2" – 4"	304SS	.062
	5" – 6"	304SS	.125

⚠ WARNING

The 796MFD is a Class 300 Strainer drilled for Class 600 Flanges.

Bolted Covers required above 150 psi or 200°F.

NOTICE

The information contained herein is not intended to replace the full product installation and safety information available or the experience of a trained product installer. You are required to thoroughly read all installation instructions and product safety information before beginning the installation of this product.

Mueller Steam Specialty product specifications in U.S. customary units and metric are approximate and are provided for reference only. For precise measurements, please contact Mueller Steam Specialty Technical Service. Mueller Steam Specialty reserves the right to change or modify product design, construction, specifications, or materials without prior notice and without incurring any obligation to make such changes and modifications on Mueller Steam Specialty products previously or subsequently sold.

Mueller Steam Specialty™

A WATTS Brand

Material

	792MFD, 794MFD, 796MFD
Body	Carbon Steel A216-WCB
Cover	Carbon Steel A216-WCB
Seats	PTFE
O-Rings	BUNA

Pickling and passivation available on request, consult factory.
*Alternate seats and O-ring materials available.

Reference Standards

ASME B16.5 Pipe Flanges and Flanged Fittings

ASME B16.34 Valves - Flanged, Threaded and Welding End

Dimensions and Weights

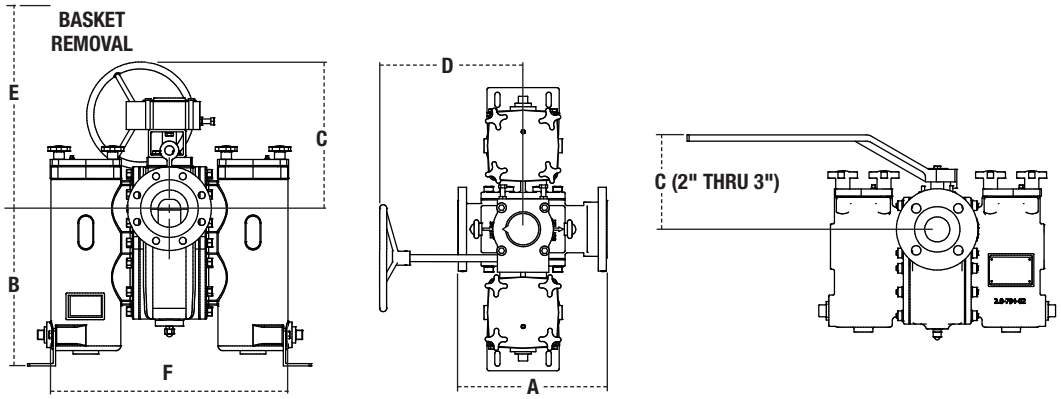

Models 792MFD, 794MFD

SIZE		DIMENSIONS																WEIGHT				C_v VALUE
		A				B		C		D		E		F		G (NPT)						
		CLASS 150		CLASS 300														792		794		
in.	mm	in.	mm	in.	mm	in.	mm	in.	mm	in.	mm	in.	mm	in.	mm	in.	mm	lbs.	kgs.	lbs.	kgs.	
2	51	10⅝	270	10⅝	270	8 3/16	208	7½	191	20	508	12⅝	321	16⅜	416	1¼	32	115	52	121	55	45
2½	64	13½	343	14¼	362	12	305	8 5/16	211	20	508	18	457	21	533	1½	38	223	101	233	106	45
3	76	13½	343	14¼	362	12	305	8 5/16	211	20	508	18	457	21	533	1½	38	223	101	233	106	110
4	102	16	406	16½	419	16⅞	429	15¾	400	15⅜	403	23⅜	594	25½	648	1½	38	443	201	466	211	160
5	127	22	559	22⅞	581	18½	470	17½	445	15⅜	403	23⅞	606	26⅝	276	1½	38	820	372	850	385	450
6	152	22	559	22⅞	581	18½	470	17½	445	15⅜	403	23⅞	606	26⅝	276	1½	38	820	372	850	385	450

Limited Warranty: Mueller Steam Specialty warrants each product to be free from defects in material and workmanship under normal usage for a period of one year from the date of original shipment. In the event of such defects within the warranty period, the Company will, at its option, replace or recondition the product without charge. This shall constitute the sole and exclusive remedy for breach of warranty, and the Company shall not be responsible for any incidental, special or consequential damages, including without limitation, lost profits or the cost of repairing or replacing other property which is damaged if this product does not work properly, other costs resulting from labor charges, delays, vandalism, negligence, fouling caused by foreign material, damage from adverse water conditions, chemical, or any other circumstances over which the Company has no control. This warranty shall be invalidated by any abuse, misuse, misapplication or improper installation of the product. **THIS WARRANTY IS IN LIEU OF ALL OTHER WARRANTIES, EXPRESS OR IMPLIED, INCLUDING ANY IMPLIED WARRANTIES OF MERCHANTABILITY OR FITNESS FOR A PARTICULAR PURPOSE.** Any implied warranties that are imposed by law are limited in duration to one year.

Some States do not allow limitations on how long an implied warranty lasts, and some States do not allow the exclusion or limitation of incidental or consequential damages. Therefore the above limitations may not apply to you. This Limited Warranty gives you specific legal rights, and you may have other rights that vary from State to State. You should consult applicable state laws to determine your rights.

Mueller Steam Specialty™

A WATTS Brand

USA: T: (800) 334-6259 • F: (800) 421-6772 • MuellerSteam.com
Latin America: T: (52) 55-4122-0138 • MuellerSteam.com

© 2021 Watts