"Apollo®



INSTALLATION, OPERATION & MAINTENANCE MANUAL

2-1/2" - 12" Double Check Valve | Double Check Detector Assembly

DC4AN | DCLF4AN | DCDA4AN | DCDLF4AN | DCDA24AN | DCDA2LF4AN

ES1597 IOM BFMMDC4ANLBF rev.a

INSTALLATION, OPERATION & MAINTENANCE MANUAL

SECTION	DESCRIPTION	PAGE
Double Check Valve Backflow Preventer DC4AN / DCLF4AN		
I	Description and Operation	3
II	Installation	3
III	Troubleshooting Guide	4
IV	Maintenance Instructions (DC/DCDA mainline)	4
	2-1/2" - 6"	4-5
	8" - 12"	5-6
V	Testing Procedures	7
Double Check Valve Detector Assembly DCDA4AN / DCDALF4AN & DCDA24AN / DCDA2LF4AN		
VI	Description and Operation	9
VII	Installation	9
VIII	Maintenance Instructions - Bypass Single Check (Type 2)	16
IX	Maintenance Instructions - Bypass Double Check (Type 1)	27
Parts List		
	2-1/2" - 6" DC & DCDA (Mainline)	11-12
	8" - 12" DC & DCDA (Mainline)	13-14
	2-1/2" - 12" DCDA2 (Type 2) Bypass Single Check	15
	2-1/2" - 12" DCDA (Type 1) Bypass DC	28
Repair Kits		
	2-1/2" - 6" Check Valves	12-13
	8" - 12" Check Valves	14
	Bypass Line Kits	16-26
	Shut-off Valves	29-31

BFMMDC4ANLBF
ES1597 REV A

I. DESCRIPTION AND OPERATION

The Double Check Valve (DC) device consists of two independently-acting, spring-loaded check valves. Two resilient seated shut-off valves and four test cocks complete the assembly. Each check is designed to maintain a minimum of 1 psi across the check during normal operation. If at any time the pressure downstream of the device increases above the supply pressure, both check valves will close to prevent any backflow from occurring. The no flow condition is illustrated in Figure 1. To initiate flow, supply pressure must be sufficient to open both checks and overcome friction, normally a minimum of 3 to 5 psi above the downstream pressure.

II. INSTALLATION

1. The DC must be installed in an accessible location to facilitate periodic field testing and maintenance.
2. Flush all upstream piping thoroughly to remove foreign matter prior to installing the device.
3. The device may be installed in the n-flow position as shown in Figure 1. Adequate clearance between the lower most portion of the device and flood grade or floor should be provided for ease of maintenance.
4. If shut-off valves are provided separately, they should be installed with test cocks on the upstream and downstream sides of
5. The wedge of the inlet shut-off valve (as shown in Figure 1). Contact local jurisdictional authorities for local requirements.
6. After installing the assembly and with downstream or #2 shut-off valve closed, pressurize the device and bleed air through test cock #4. Then open #2 shut-off valve.

FIGURE 1

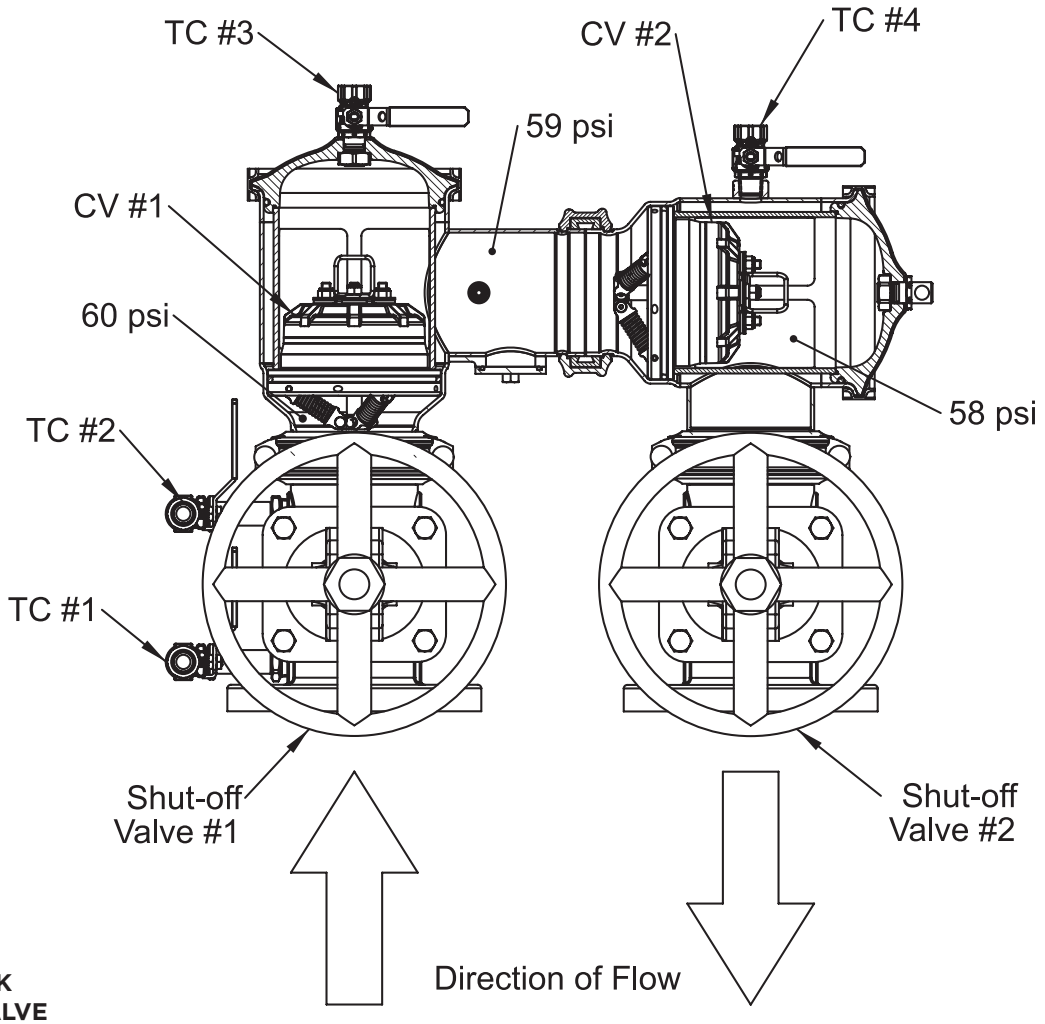

TC: TEST COCK
CV: CHECK VALVE

Note: Pressures are for illustrative purposes only and are not necessarily indicative of any actual valve.

III. TROUBLESHOOTING

SYMPTOM	CAUSE	CORRECTIVE ACTION
Check valve fails to hold 1 psid.	1. Shut-off valve not closed completely. 2. Check valve fouled with debris. 3. Check poppet stem not moving freely in guide.	1. Close #2 shut-off valve or inspect for possible through leakage. 2. Inspect and clean seat disc and seat. 3. Inspect for debris or deposit on poppet stem or guide.

IV. MAINTENANCE INSTRUCTIONS

2-1/2" - 6" SIZES

Open test cocks #2, #3, and #4 to relieve pressure from the device. Both shut-off valves must be closed.

A. CHECK REMOVAL

Note: If the first check seat disc needs only to be cleaned, it is not necessary to remove the entire check module from the valve body. See the next section, "Check Maintenance", for seat disc cleaning instructions.

1. Remove the cover clamp by backing off the nut until the latch can be disengaged from the T-bolt. Pull the clamp apart and slide away from the valve. See Figure 2.
2. Lift off the cover. A flat screwdriver will aid in lifting the cover out of the body. See Figure 2.
3. Remove the check-retaining spacer from the body. Pull the check module straight out of body. The check module is sealed in place with an o-ring. See Figure 3.

FIGURE 2

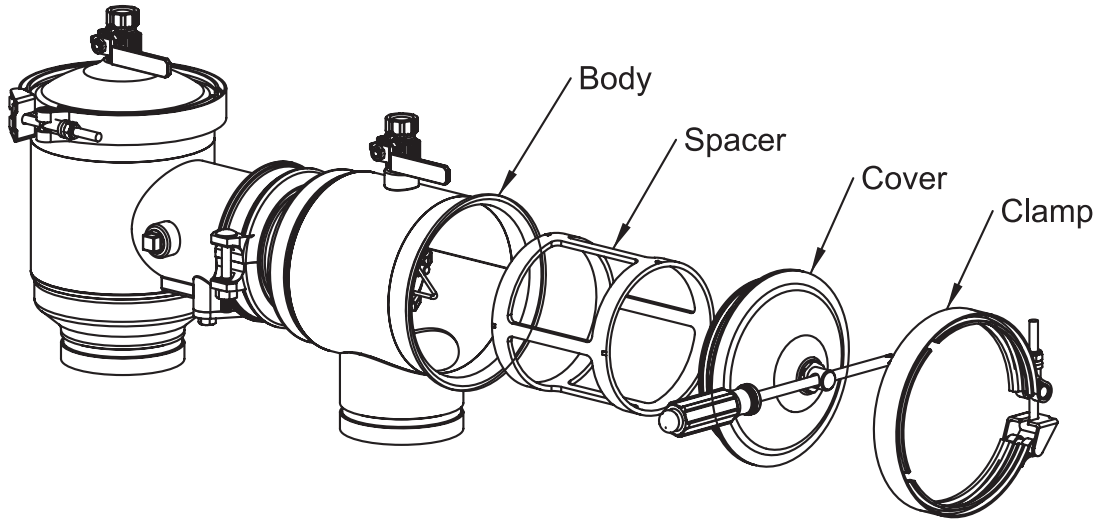

FIGURE 3

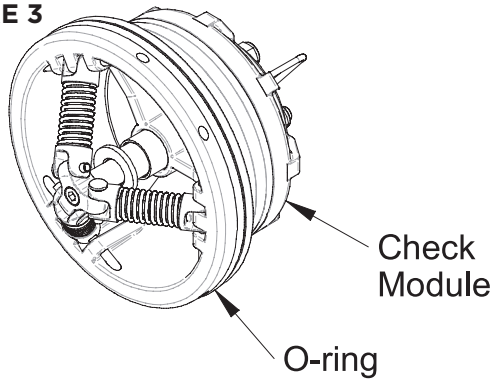

IV. MAINTENANCE INSTRUCTIONS

B. CHECK MAINTENANCE

If only cleaning of the first check is necessary, simply remove the three (3) nuts for 2-1/2" & 3" valves/ four(4) nuts for 4" & 6" valves on the black plastic disc retainer (See Figure 4). Remove the check handle and washer and lift the disc retainer and disc out of the body. Rinse the disc with clean water or replace if necessary. The disc may be flipped over for a temporary repair, but should be replaced if damaged. Replace the disc, disc retainer, washer, handle, and nuts. **Do not over tighten locknuts.**

NOTE: The springs are factory installed and should not be removed or adjusted. Serious injury could occur if springs are disassembled.

FIGURE 4
2-1/2" – 6" SIZES

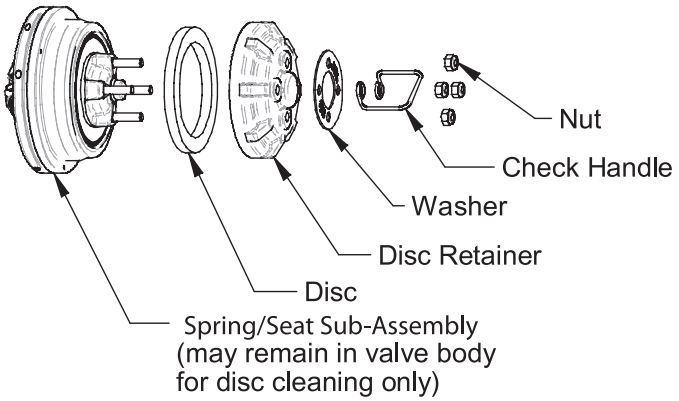

FIGURE 5

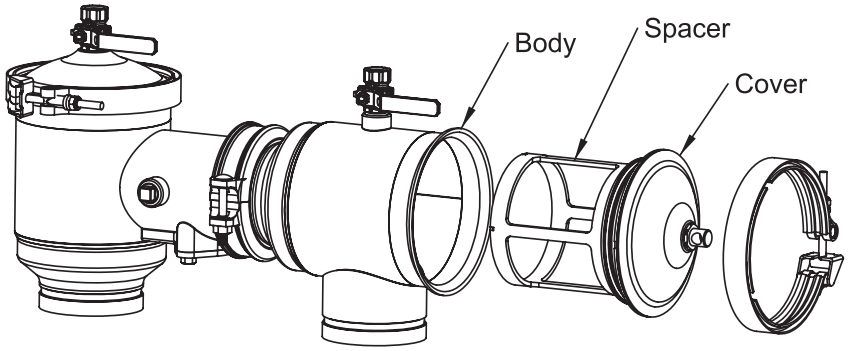

8" - 12" SIZES

Open test cocks #2, #3, and #4 to relieve pressure from the device. Both shut-off valves must be closed.

A. CHECK REMOVAL

Note: If the first check disc needs only to be cleaned, it is not necessary to remove the entire check module from the valve body. See the next section, "Check Maintenance", for disc cleaning instructions.

1. Take off the cover coupling by removing the two bolts and nuts. The gasket may remain on the valve body.
2. Lift off the cover. (See Figure 6)
3. Remove the six (6) nuts for 8" valves/ eight (8) nuts for 10" & 12" valves with a 3/4" socket and ratchet.
4. Slide the entire check module off the body studs and remove from body (see Figure 7).

IV. MAINTENANCE INSTRUCTIONS

FIGURE 6

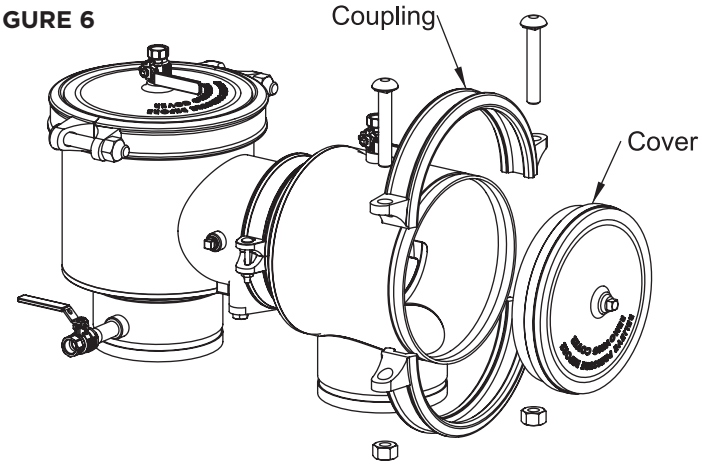

FIGURE 7

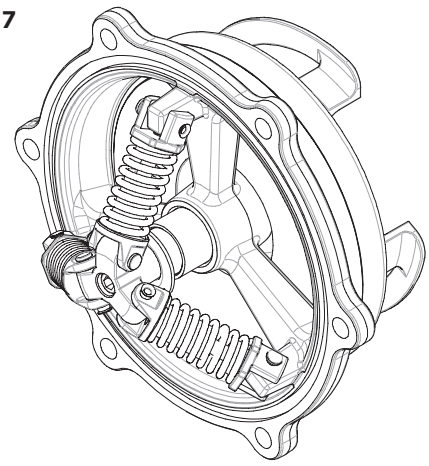

B. CHECK MAINTENANCE (CAN BE ACHIEVED WITHOUT REMOVING ENTIRE CHECK.)

If only cleaning of either check is necessary, simply remove the six (6) nuts for 8" valves / eight (8) nuts for 10" & 12" valves on the black plastic disc retainer (See Figure 8). Remove the check handles and washers and lift the disc retainer and disc out of the body. Rinse the disc with clean water or replace if necessary. The disc may be flipped over for a temporary repair, but should be replaced if damaged. Replace the disc, disc retainer, washer, handle, and nuts. **Do not over tighten locknuts.**

NOTE: ***The springs are factory installed and should not be removed or adjusted. Serious injury could occur if springs are disassembled.***

FIGURE 8
8" - 12" SIZES

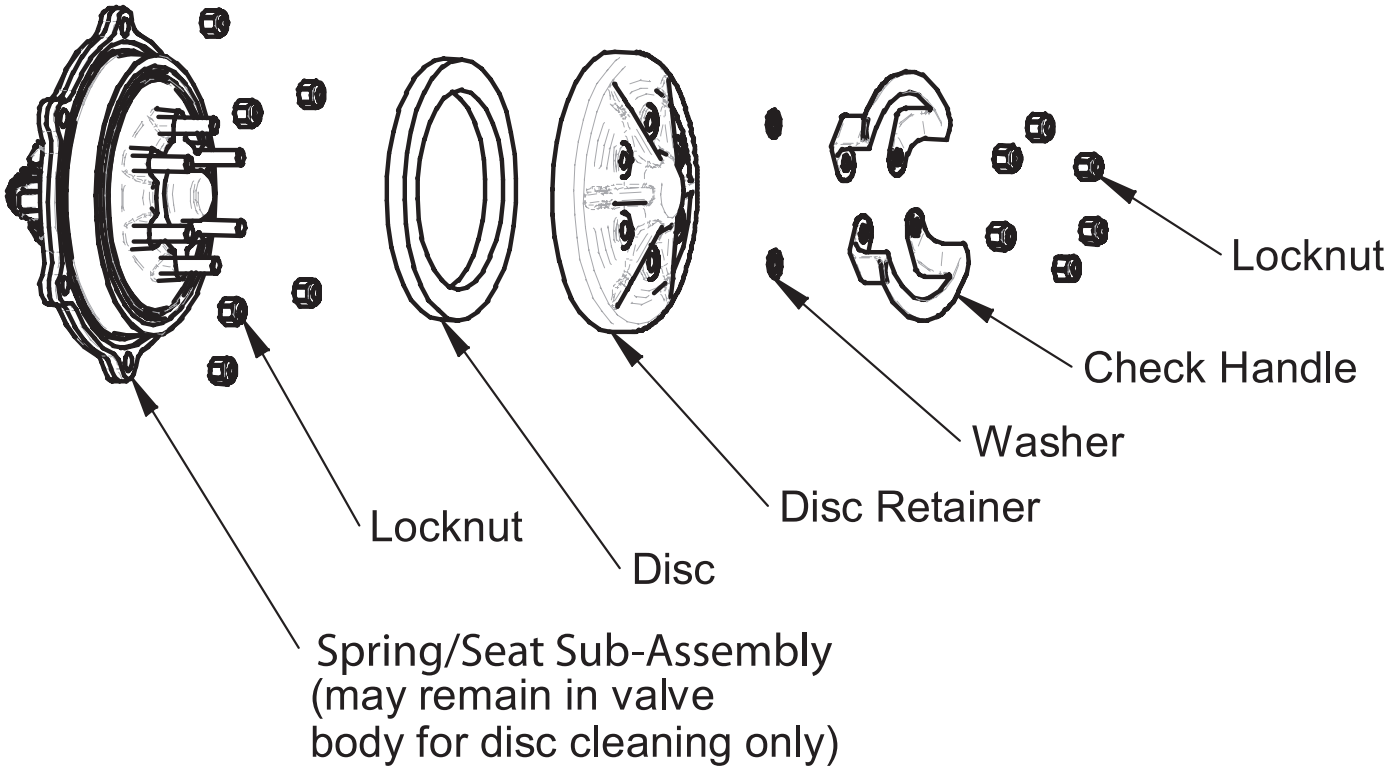

V. TESTING PROCEDURES

NOTE: This is a three-valve test kit procedure. Your local water purveyor should be consulted for acceptable test procedures. This procedure is to be used on a stand-alone double check valve (DC), the mainline DC of a double check detector, and/or the bypass DC of a standard (Type 1) double check detector. See Figure 9 for a schematic of the test setup.

TEST SETUP:

Flush test cocks (TC) (#1, #2, #3 & #4). Close shut-off valve #2. All TCs should be closed.

CHECK VALVE #1:

1. Close all valves on test kit.
2. Connect the high side hose to TC #2 and the low side hose to TC #3. Open TC #2 and TC #3.
3. Open vent valve "C" and high "A" on the test kit to bleed air from the high side of the kit. Close high "A" valve and then open low "B" valve to bleed the low side. Close low "B" valve.
4. Record the gauge reading. It must be a minimum of 1.0 psid to pass. Close TC #2 and TC #3.

CHECK VALVE #2:

1. Move the high side hose to TC #3 and the low side hose to TC #4. Open TC #3 and TC #4.
2. Open vent "C" valve. Then open high "A" and bleed air from the high side of the kit. Close high "A" valve, and then open low "B" valve and bleed the low side of the kit. Close low "B" valve.
3. Record the gauge reading. It must be a minimum of 1.0 psid to pass. Close TC #3 and TC#4. Remove hoses and drain test kit.
4. Slowly open shut-off valve #2 to restore water flow.

LEAKING #2 SHUT-OFF VALVE:

The following test will expose a leaking #2 shut-off valve.

1. Both shut-off valves should be open. Make sure all valves on test kit are closed. Connect the high "A" hose to TC #2 and the low "B" hose to TC #3. Open TC #2 and TC #3.
2. Open the high "A" valve and vent "C" valve to bleed air from high side of gauge. Open low "B" valve to bleed air from low side of gauge. Close valves "A", "B" and "C" on test kit.
3. Connect the vent hose to TC #4. Open TC #4.
4. Close shut-off valve #2. The differential gauge needle should read at least 1.0 psid.
5. Open the high "A" valve and vent "C" valve. This will put back pressure on check valve #2.
6. Close TC #2.

If gauge is steady, then shut-off valve #2 is holding tight. However, if gauge drops to zero psid, then shut-off valve #2 is leaking. If the gauge rises then the #2 shut-off valve is still leaking, but is under back-pressure from a downstream source.

TESTING PROCEDURE FOR SINGLE CHECK ON DCDA TYPE 2 BYPASS:

Note: The first check of the mainline valve is also the first check of the bypass assembly and the test results for the first mainline check should be recorded as the first check of the bypass assembly. If the local water authority requires a second test for the first check, perform the test again and record the results. The second check is the single check on the bypass line. (See page 10 for test cock locations)

7. Flush water through the bypass line test cocks to eliminate foreign material.
8. To test the bypass single check, connect the "high" side hose to the first test cock on the bypass line (upstream of single check valve). Hold the "low" side hose level with the gauge.
9. Close the inlet shut-off valve on the mainline and bypass line. The single check valve must hold at least 1.0 psid.

WRAP UP:

Close all test cocks. Open #2 shut-off valve. Drain gauge.

3 VALVE TEST KIT

FIGURE 9

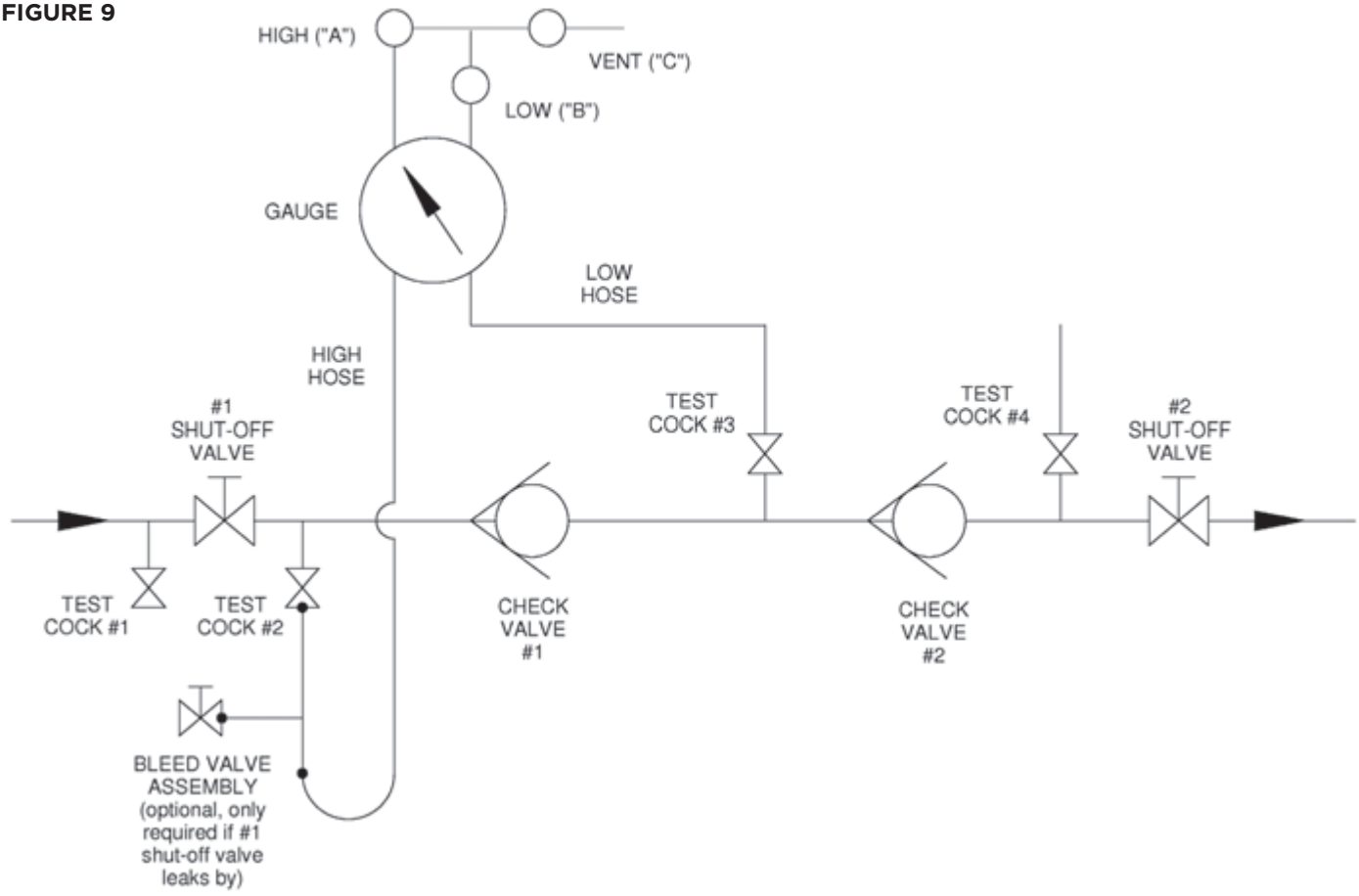

VI. DESCRIPTION AND OPERATION

The Double Check Detector Assembly (DCDA Type 1) contains a mainline DC incorporating two spring loaded check valves and a bypass line consisting of an approved DC assembly and a water meter. The DCDA Type 2 contains a mainline DC incorporating two spring loaded check valves and a bypass line consisting of a single check valve and a water meter. Each device is equipped with test cocks for periodic field testing and is normally supplied with inlet and outlet shut-off valves. NOTE: UL and FM installations must include indicating type shut-off valves.

During no flow conditions, the mainline and by-pass check valves will remain closed. If there is a low flow demand (up to a minimum of 2 gpm) of water downstream, the flow is routed through the water meter to monitor such consumption. If the downstream pressure increases above the supply pressure or there is a reduction in the inlet pressure, the mainline and bypass check valves will close to prevent backflow.

VII. INSTALLATION

1. The DCDA must be installed in an accessible location to facilitate periodic field testing and maintenance.
2. Flush all upstream piping system thoroughly to remove foreign matter prior to installing the device.
3. The device may be installed in the n-flow position. A clearance of 12" to 30" between the lower most portion of the device and flood grade or floor should be provided for ease of maintenance.
4. After installing the assembly and with downstream (#2) shut-off valve closed, pressurize the device and bleed air through test cock #4. Then open #2 shut-off valve.

OTHER INSTALLATION TIPS

- Installing this device in a pit requires consideration for future maintenance and repair. Along with necessary clearances, there must be adequate drainage within the pit to deter potential accumulation of standing water. Also, check with local codes and/or inspectors prior to making such installations.
- Do not install in areas subject to freezing without using a properly designed enclosure.
- As in any piping system, provisions should be made to minimize water hammer and pressure rise due to thermal expansion, as these conditions can create damaging and dangerously high internal pressures.

DCDA BYPASS TYPES

DCDA4AN TYPE 1
DCDALF4AN TYPE 1

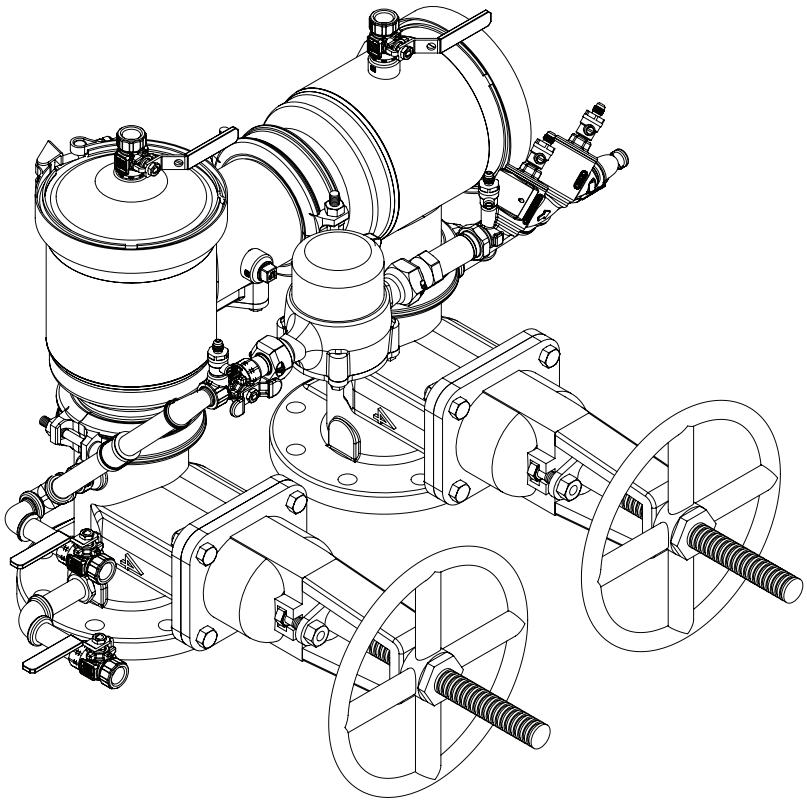

DCDA24N TYPE 2
DCDA2LF4AN TYPE 2

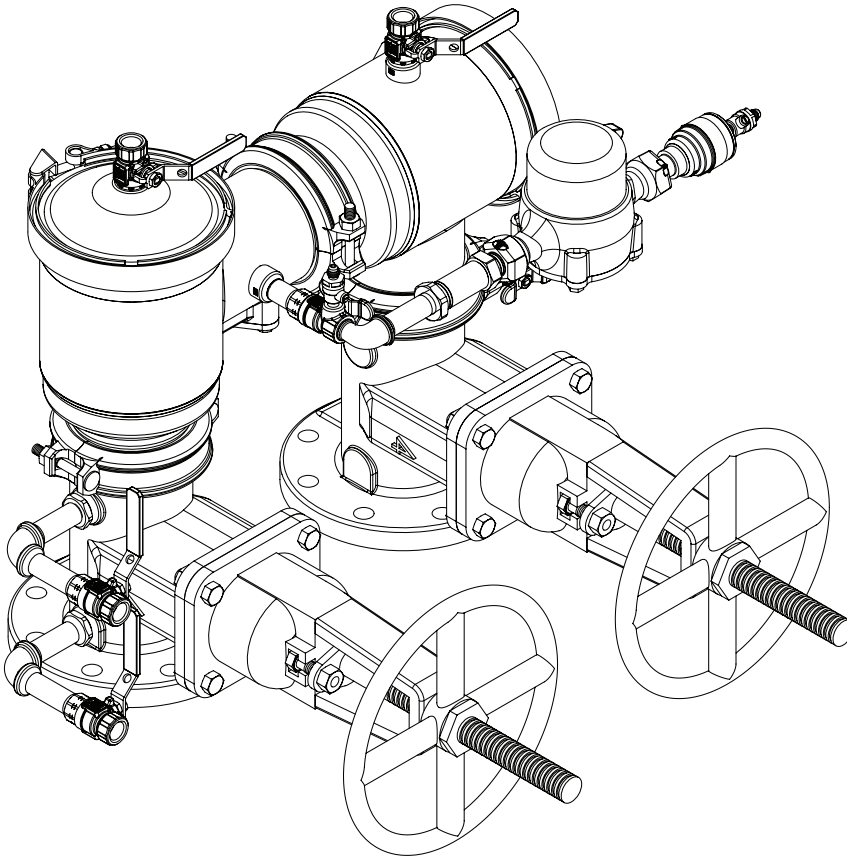

BFMMDC4ANLBF
ES1597 REV A

PART NUMBER DIAGRAM - 2-1/2" - 6"

FIGURE 10
DC4AN, DCLF4AN
DCDA4AN, DCDALF4AN (MAINLINE)
DCDA24AN, DCDA2LF4AN (MAINLINE)

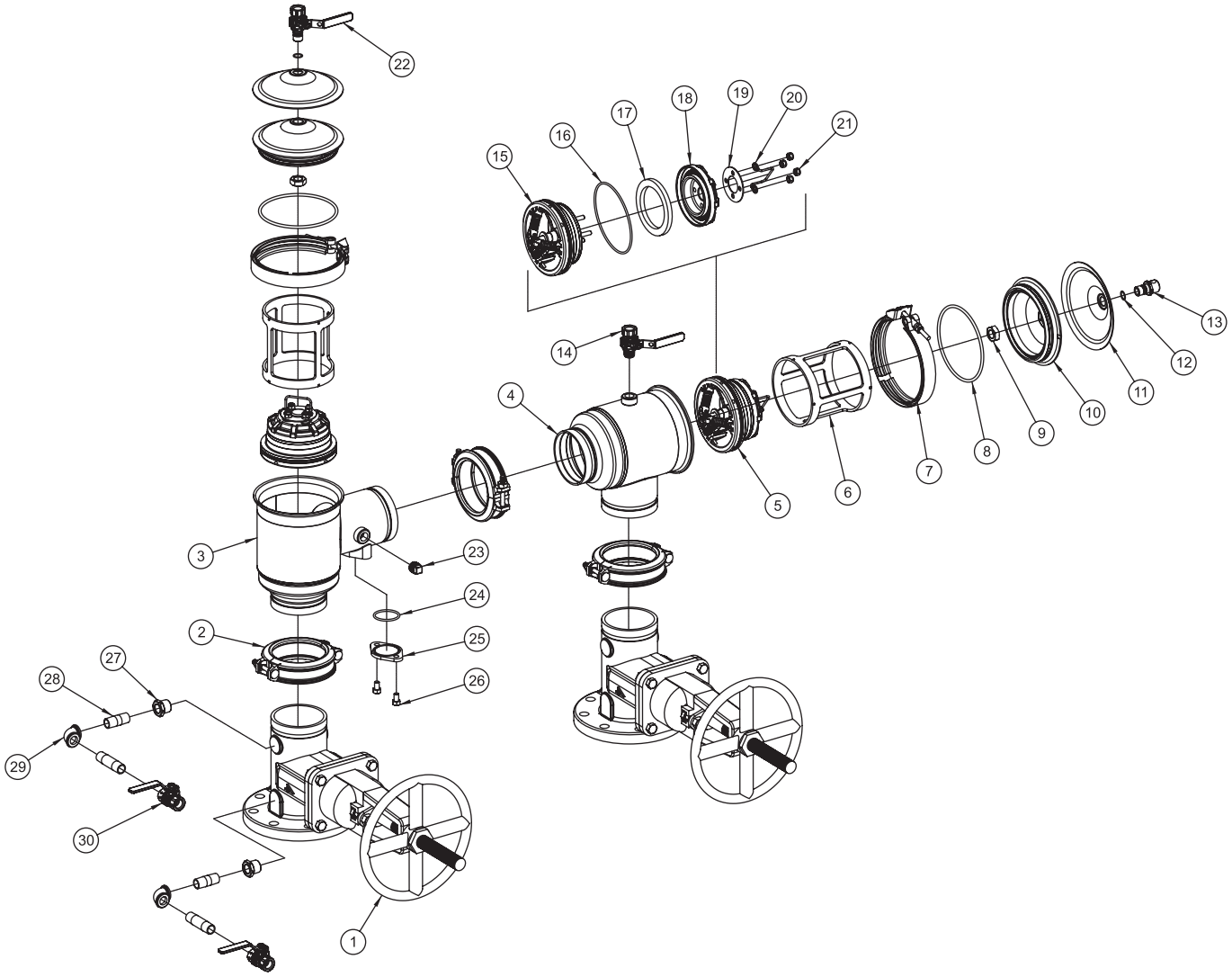

PARTS LIST - 2-1/2" - 6"

DC4AN/DCDA4AN (MAINLINE) / DCDA24AN (MAINLINE) PARTS LIST
DCLF4AN/DCDALF4AN (MAINLINE) / DCDA2LF4A (MAINLINE) PARTS LIST

ITEM #	DESCRIPTION	QTY.	PART NUMBER			
			2-1/2"	3"	4"	6"
1	Shut-off Valve	2	See Pages 18 & 19			
2	Coupling	3	W-5237-00	W-5238-00	W-5239-00	W-5240-00
3	First Check Body	1	Consult Factory			
4	Second Check Body	1	Consult Factory			
5	Check Module	2	W-9856-05		W-9668-05	W-9669-05
6	Check Retaining Spacer	2	G-4832-00		G-4804-00	G-4805-00
7	Cover Clamp	2	W-9293-00		W-9183-00	W-9221-00
8	O-ring, Cover	2	D-4976-00		D-4870-00	D-5001-00
9	Retaining Nut	2	C-2635-00			C-1756-00
10	Cover, Inner	2	F-3900-00		F-3864-00	F-3865-00
11	Cover, Outer	2	E-2903-00		E-2865-00	E-2866-00
12	O-ring, Test Cock	2	D-4892-00			D-3904-00
13	Second Check Cover Plug	1	L-8462-06			L-8463-06
14	Test Cock, MxF	1	77CLF-803-10			77CLF-804-10
15	Seat/Spring Sub-Assy	2	W-9715-05		W-9717-05	W-9719-05
16	Check Seat O-ring	1	D-5171-00		D-4869-00	D-5000-00
17	Disc	1	D-4958-00		D-4862-00	D-4890-00
18	Disc Retainer	1	L-7800-00		F-3862-00	F-3863-00
19	Washer	(QTY)	E-2905-00 (1)		E-2920-00 (1)	E-2878-00 (4)
20	Handle	1	H-3814-00		H-3792-00	H-3793-00
21	Locknut	(QTY)	C-1900-00 (3)		C-2052-00 (4)	C-2053-00 (4)
22	Test Cock, Cover	2	77CLF-803-A0			77CLF-804-A0
23	Plug, 1/2" NPT	2	K-4594-05			
24	O-ring, RV Port	1	D-4866-00			
25	Cover, RV Port	1	F-3875-00			
26	Screw, 3/8-16 x .63	2	B-1921-00			
27	Reducer Bushing	2	K-4605-00			N/A
28	Nipple	4	K-3406-00			K-3412-00
29	Elbow, 90°	2	K-4598-00			K-3501-00
30	Test Cock, FxF	2	77CLF-103-10			77CLF-104-10

Individual parts are only available for bulk sales. Please refer to the appropriate repair kits below and on page 13.
*Note: All bronze components listed are lead-free**
**LEAD FREE: The wetted surfaces of this product shall contain no more than 0.25% lead by weighted average. Complies with CA AB1953, VT Act 193, MD HB*

REPAIR KITS - 2-1/2" - 6"

CHECK RUBBER ONLY KIT (ONE KIT REPAIRS ONE CHECK)		SIZE		
		2-1/2" & 3"	4"	6"
	REPAIR KIT MODEL NUMBER	RK4A3CMR	RK4A4CMR	RK4A6CMR
ITEM #	ORDERING NUMBER	4A-000-01	4A-00A-01	4A-00C-01
not Shown	Lubricant	I-9016-00		
17	Disc	D-4958-00	D-4862-00	D-4890-00
16	Check O-ring	D-5171-00	D-4869-00	D-5000-00
24	Relief Valve Port O-ring	D-4866-00		
8	Cover O-ring	D-4976-00	D-4870-00	D-5001-00
12	Test Cock O-ring	D-4892-00		D-3904-00

*Note: All bronze components listed are lead-free**
** LEAD FREE: The wetted surfaces of this product shall contain no more than 0.25% lead by weighted average. Complies with CA AB1953, VT Act 193, MD HB372, LA HB471, and Federal Public Law 111-380.*

BFMMDC4ANLBF
ES1597 REV A

REPAIR KITS (MAINLINE) 2-1/2" - 6"

DC CHECK COMPLETE KIT (ONE KIT REPAIRS ONE CHECK)		SIZE		
		2-1/2" & 3"	4"	6"
	REPAIR KIT MODEL NUMBER	RK4A3CMC	RK4A4CMC	RK4A6CMC
ITEM #	ORDERING NUMBER	4A-000-02	4A-00A-02	4A-00C-02
not shown	Lubricant	I-9016-00		
5	Check Module S-Assy	W-9856-05	W-9668-05	W-9669-05
16	Check O-ring	D-5171-00	D-4869-00	D-5000-00
8	Cover O-ring	D-4976-00	D-4870-00	D-5001-00

*Note: All bronze components listed are lead-free**
** LEAD FREE: The wetted surfaces of this product shall contain no more than 0.25% lead by weighted average. Complies with CA AB1953, VT Act 193, MD HB372, LA HB471, and Federal Public Law 111-380.*

PART NUMBER DIAGRAM - 8 - 12"

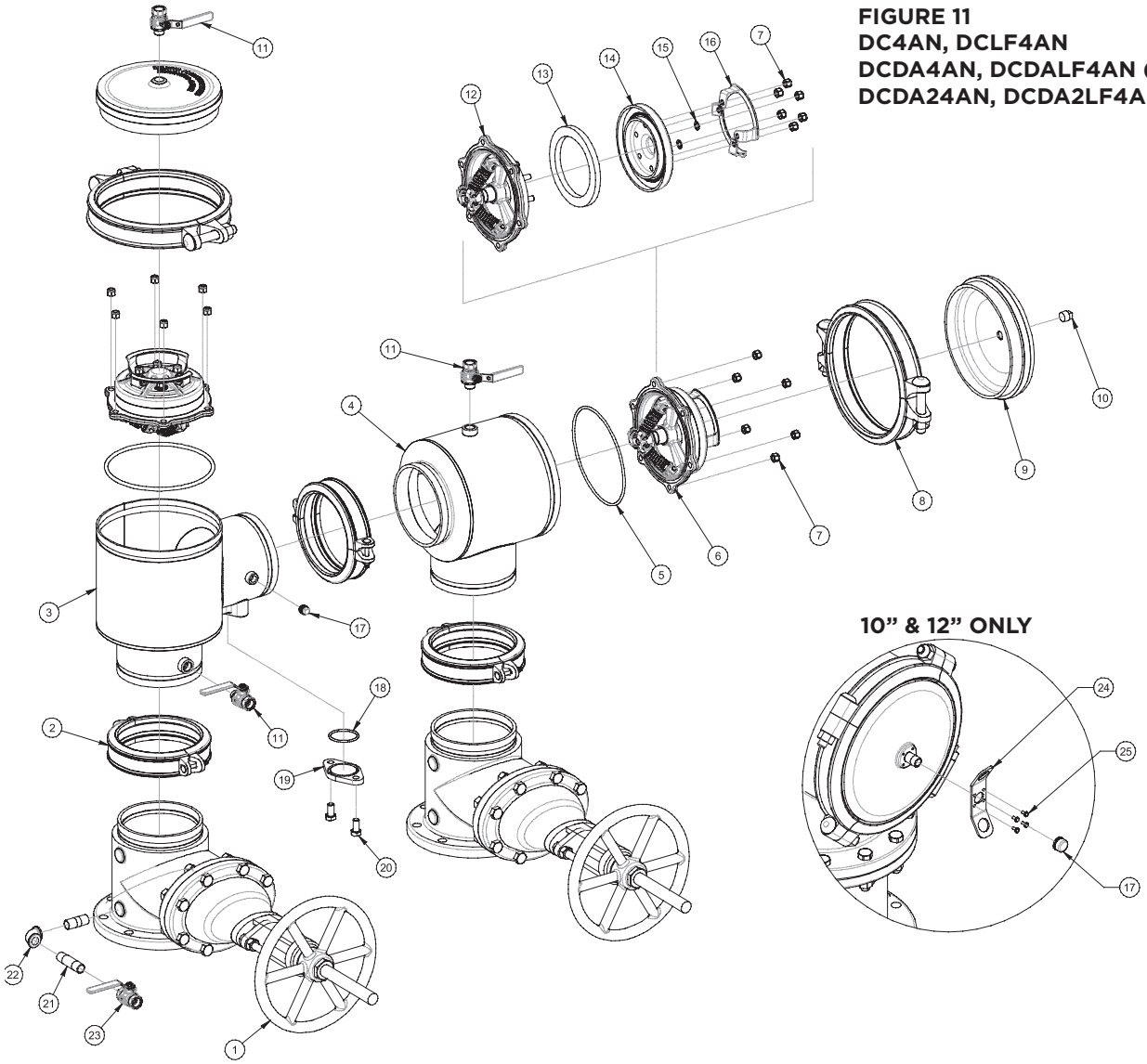

FIGURE 11
DC4AN, DCLF4AN
DCDA4AN, DCDALF4AN (MAINLINE)
DCDA24AN, DCDA2LF4AN (MAINLINE)

PARTS LIST & REPAIR KITS - 8" - 12"

DC4AN/DCDA4AN (MAINLINE) / DCDA24AN (MAINLINE) PARTS LIST
DCLF4AN/DCDALF4AN (MAINLINE) / DCDA2LF4AN (MAINLINE) PARTS LIST

ITEM #	DESCRIPTION	QTY.	PART NUMBER		
			8"	10"	12"
1	Shut-off Valve	2	See Page 18 & 19		
2	Coupling	(QTY)	W-9791-00 (3)	W-5242-00 (3)	W-9243-00 (1)
	Bolt Pack	1	N/A	N/A	40-00H-BP
3	First Check Valve Body	1	Consult Factory		
4	Second Check Valve Body	1	Consult Factory		
5	Check O-ring	2	D-4935-00	D-4997-00	
6	Check Module	2	W-9672-05	W-9861-05	
7	Locknut, 1/2-13	(QTY)	C-2638-00 (24)	C-2638-00 (32)	
8	Cover Clamp	2	W-9243-00	W-9355-00	
9	Cover	2	E-2898-05	Q-7064-19	
10	Plug, 3/4" NPT	1	K-4595-05	N/A	
11	Test Cock	3	77CLF-804-10	77CLF-104-10	
12	Seat/Spring Sub-Assy	2	W-9721-05	W-9723-05	
13	Disc	2	D-4934-00	D-4960-00	
14	Disc Retainer	1	F-3899-00	F-3903-00	
15	Washer	2	E-2897-00		
16	Handle	2	H-3828-00	H-3813-00	
17	Cap, 1/2" NPT	5	N/A	K-4656-00	
	Plug, 1/2" NPT	2	K-4594-05	N/A	N/A
18	O-ring, RV Port	1	D-4963-00	D-2304-00	
19	Cover, RV Port	1	F-3898-05	F-3922-00	
20	Screw	2	B-2348-00	B-1690-00	
21	Nipple	2	K-3412-00		
22	Elbow, 3/4", 90°	1	K-4599-00		
23	Test Cock, FxF	1	77CLF-104-10		
24	Lifting Tab	2	N/A	E-2955-05	
25	Screw, 1/4-20 X .50	8	N/A	B-1913-00	

Individual parts are only available for bulk sales. Please refer to the appropriate repair kits below.
*Note: All bronze components listed are lead-free**
**LEAD FREE: The wetted surfaces of this product shall contain no more than 0.25% lead by weighted average. Complies with CA AB1953, VT Act 193, MD HB372, LA HB471, and Federal Public Law 111-380.*

REPAIR KITS (MAINLINE) 8"–12"

CHECK RUBBER ONLY KIT (ONE KIT REPAIRS ONE CHECK)		SIZE	
		8"	10" & 12"
	REPAIR KIT MODEL NUMBER	RK4A8CMR	RK4A12INCMR
ITEM #	ORDERING CODE	4A-00E-01	4A-00H-01
not shown	Lubricant	I-9016-00	
13	Disc	D-4934-00	D-4960-00
5	Check O-ring	D-4935-00	D-4997-00
18	Relief Valve Port O-ring	D-4963-00	D-2304-00
DC Check Complete Kit (One kit repairs one check)		Size	
		8"	10" & 12"
	Repair Kit Model Number	RK4A8CMC	RK4A12INCMC
Item #	Ordering Code	4A-00E-00	4A-00H-00
not shown	Lubricant	I-9016-00	
6	Check Module S-Assy	W-9672-05	W-9861-05
5	Check O-ring	D-4935-00	D-4997-00

*Note: All bronze components listed are lead-free**
** LEAD FREE: The wetted surfaces of this product shall contain no more than 0.25% lead by weighted average. Complies with CA AB1953, VT Act 193, MD HB372, LA HB471, and Federal Public Law 111-380.*

BFMMDC4ANLBF
ES1597 REV A

PART LIST - BYPASS SINGLE CHECK (TYPE 2)
W977005 SINGLE CHECK VALVE (LEAD FREE*)

ITEM	PART #	DESCRIPTION	QTY
1	K-4587-06	Tail Piece	1
2	C-1844-05	Union Nut	1
3	Q-7281-05	Body	1
4	D-3885-00	Check O-ring	1
5	I-9342-00	Nameplate	1
6	F-3228-00	Check Valve	1
7	D-3589-00	Cap O-ring	1
8	F-4042-05	Cap	1
9	78LF-270-01	Test Cock	1

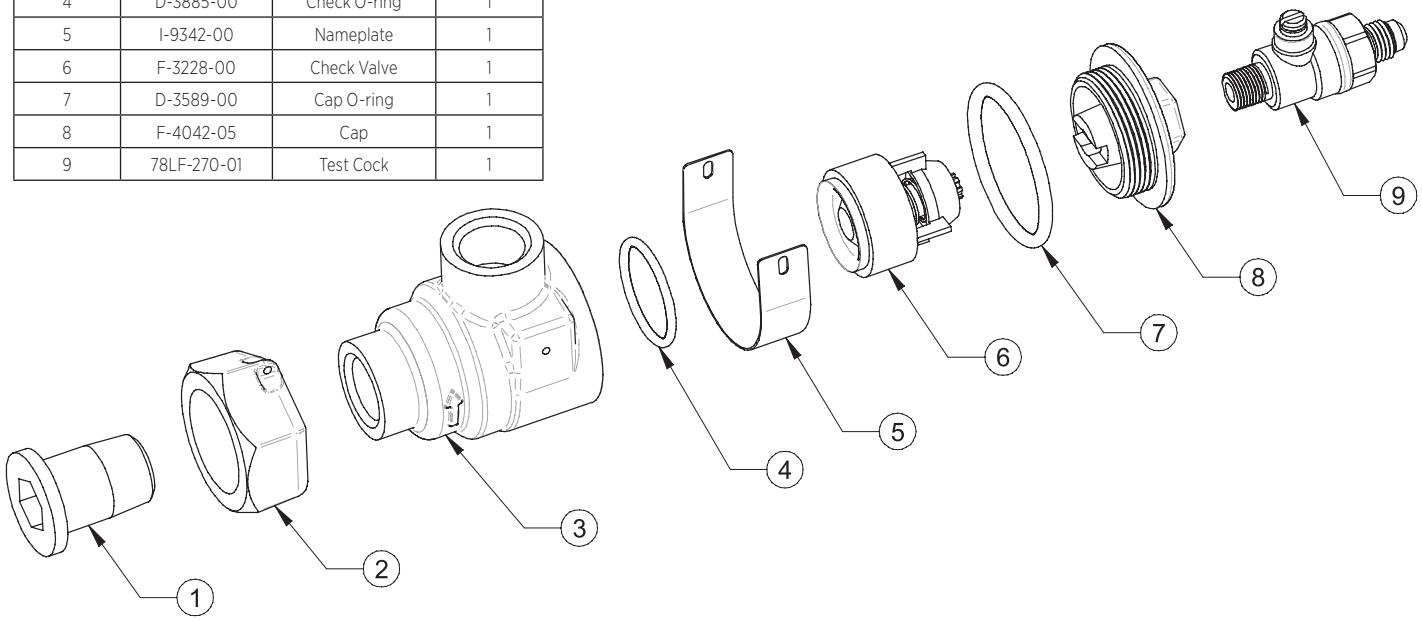

Individual parts are only available for bulk sales.
Please refer to the appropriate repair kits below.

BYPASS SINGLE CHECK REPAIR KITS
4A-003-12:
Check Repair Kit: Includes items 4, 6, and 7 (1 ea.)

4A-003-13:
Check Complete Kit: Includes items 1-9 (1 ea.)
*Note: All bronze components listed are lead-free**
** LEAD FREE: The wetted surfaces of this product shall contain no more than 0.25% lead by weighted average. Complies with CA AB1953, VT Act 193, MD HB372, LA HB471, and Federal Public Law 111-380.*

VIII. MAINTENANCE INSTRUCTIONS - BYPASS SINGLE CHECK (TYPE 2)

A. DISASSEMBLY - CHECK VALVE MODULE

1. Close #2 bypass line shut-off valve, then close #1 bypass line shut-off valve.
2. Bleed pressure from the assembly by opening the upstream test cock (located on the bypass line #1 shut-off valve) and the downstream test cock (located on the check valve cap).
3. Unscrew cap using hex head provided.
4. Pull check module straight out of body. Needle-nose pliers will aid in removing check valve. Check o-ring may remain in *valve body.*

NOTE: Check valve modules are not user serviceable. In the event of check failure, replacement modules are sold individually. However, debris caught in the check may be rinsed out.

B. ASSEMBLY - CHECK VALVE MODULE

1. Install new or cleaned check valve module into body (ensure check o-ring is in place).
2. Apply a thin coat of Apollo®* supplied lubricant, DOW 111 or equal, on cap o-ring.
3. Install cap.

BYPASS LINE KITS

SIZE	METER OPTION	TYPE 1 BYPASS KIT PART NO.	TYPE 2 BYPASS KIT PART NO.
2-1/2"	GALLONS PER MIN	4ALF-600-BPE	4ALF-620-BPE
	CUBIC FT PER MIN	4ALF-600-BPC	4ALF-620-BPC
	NO METER	4ALF-600-BPG	4ALF-620-BPG
3"	GALLONS PER MIN	4ALF-600-BPE	4ALF-620-BPE
	CUBIC FT PER MIN	4ALF-600-BPC	4ALF-620-BPC
	NO METER	4ALF-600-BPG	4ALF-620-BPG
4"	GALLONS PER MIN	4ALF-60A-BPE	4ALF-62A-BPE
	CUBIC FT PER MIN	4ALF-60A-BPC	4ALF-62A-BPC
	NO METER	4ALF-60A-BPG	4ALF-62A-BPG
6"	GALLONS PER MIN	4ALF-60C-BPE	4ALF-62C-BPE
	CUBIC FT PER MIN	4ALF-60C-BPC	4ALF-62C-BPC
	NO METER	4ALF-60C-BPG	4ALF-62C-BPG
8"	GALLONS PER MIN	4ALF-60E-BPE	4ALF-62E-BPE
	CUBIC FT PER MIN	4ALF-60E-BPC	4ALF-62E-BPC
	NO METER	4ALF-60E-BPG	4ALF-62E-BPG
10"	GALLONS PER MIN	4ALF-60G-BPE	4ALF-62G-BPE
	CUBIC FT PER MIN	4ALF-60G-BPC	4ALF-62G-BPC
	NO METER	4ALF-60G-BPG	4ALF-62G-BPG
12"	GALLONS PER MIN	4ALF-60H-BPE	4ALF-62H-BPE
	CUBIC FT PER MIN	4ALF-60H-BPC	4ALF-62H-BPC
	NO METER	4ALF-60H-BPG	4ALF-62H-BPG

BFMMDC4ANLBF
ES1597 REV A

BYPASS KITS

2-1/2" & 3" TYPE 1 BYPASS LINE

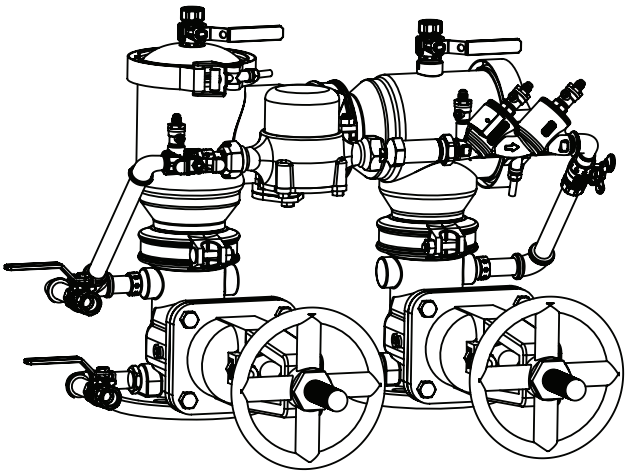

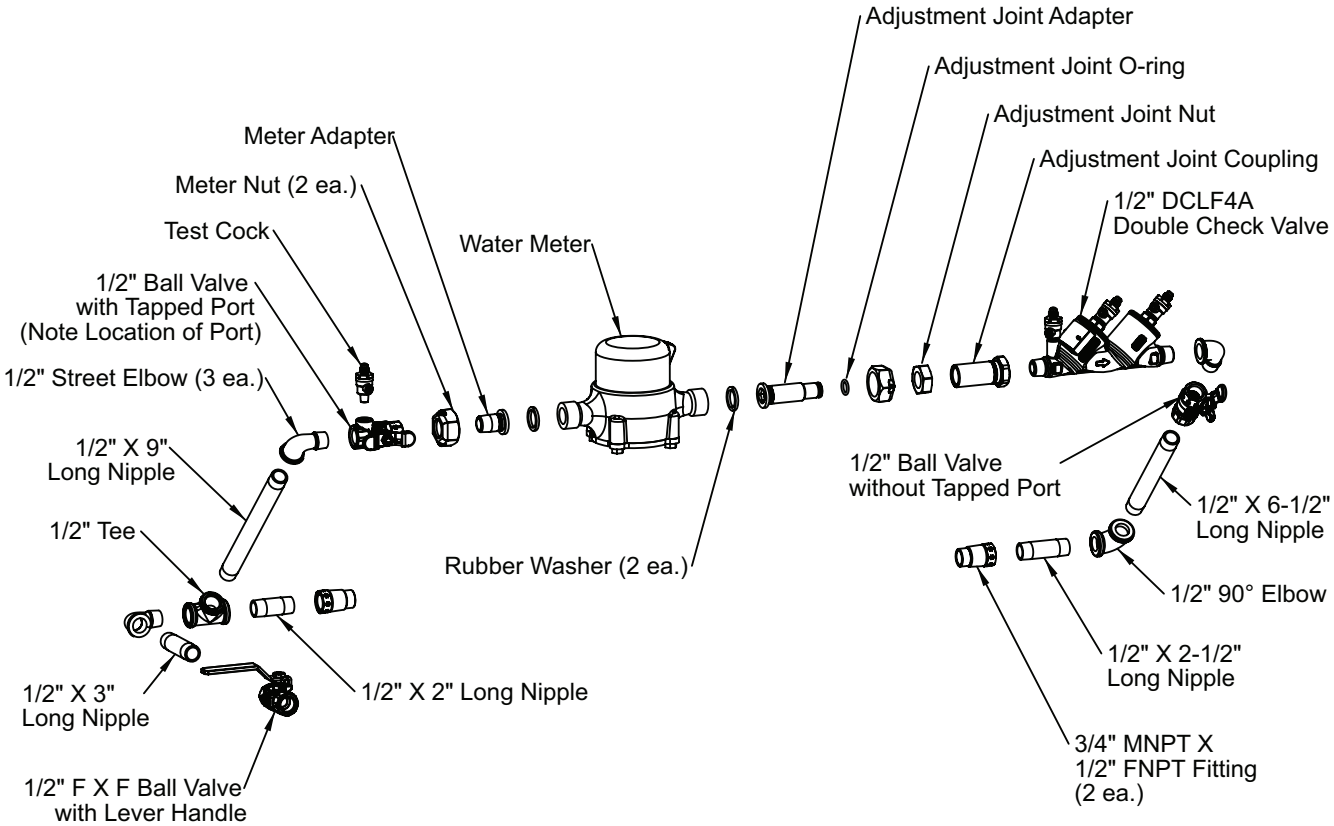

APPLY TEFLON TAPE TO PIPE THREADS AND INSTALL COMPONENTS AS SHOWN.

BYPASS KITS

4" TYPE 1 BYPASS LINE

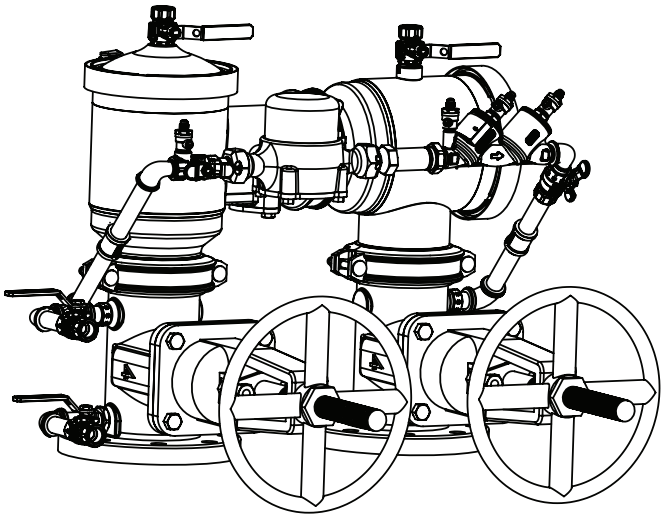

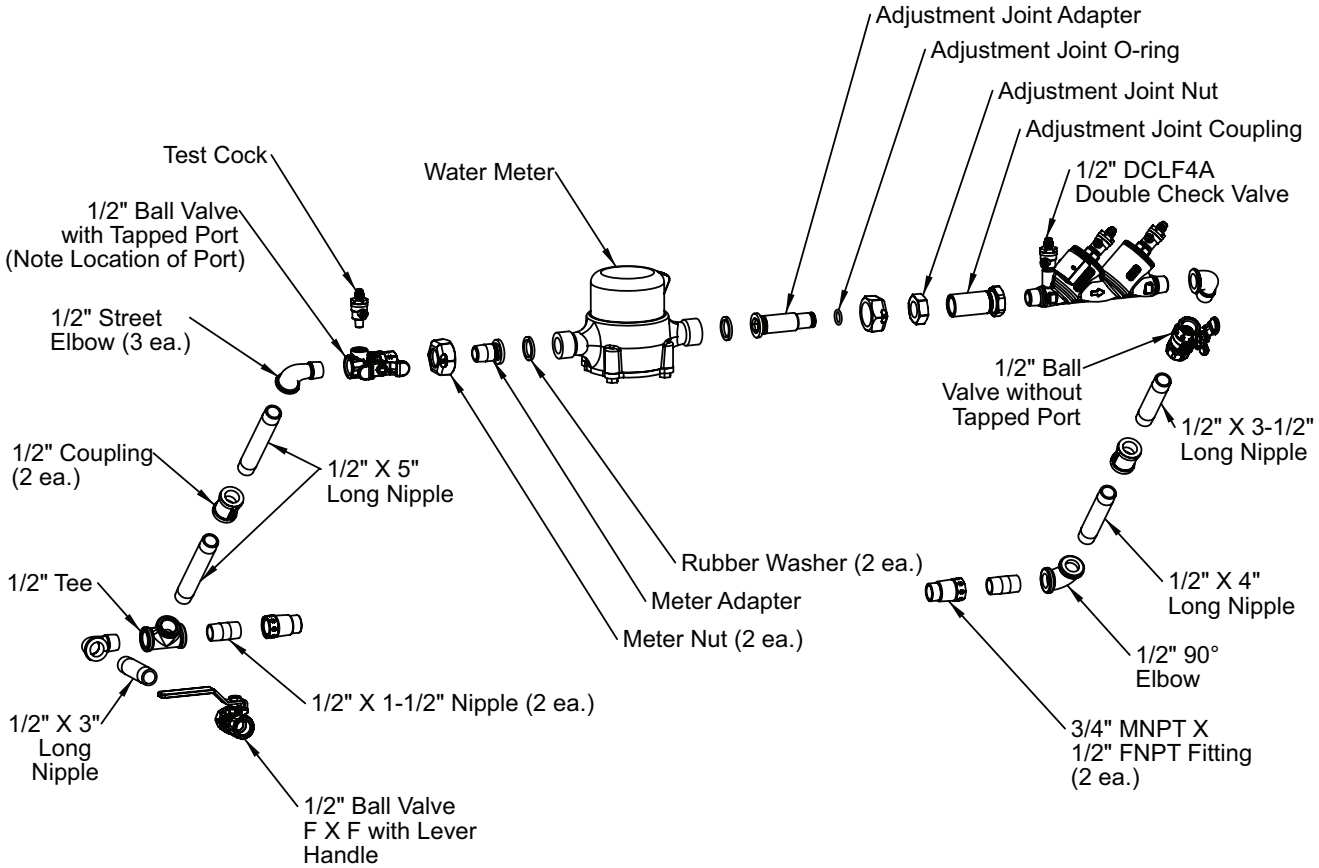

APPLY TEFLON TAPE TO PIPE THREADS AND INSTALL COMPONENTS AS SHOWN.

BFMMDC4ANLBF
ES1597 REV A

BYPASS KITS

6" TYPE 1 BYPASS LINE

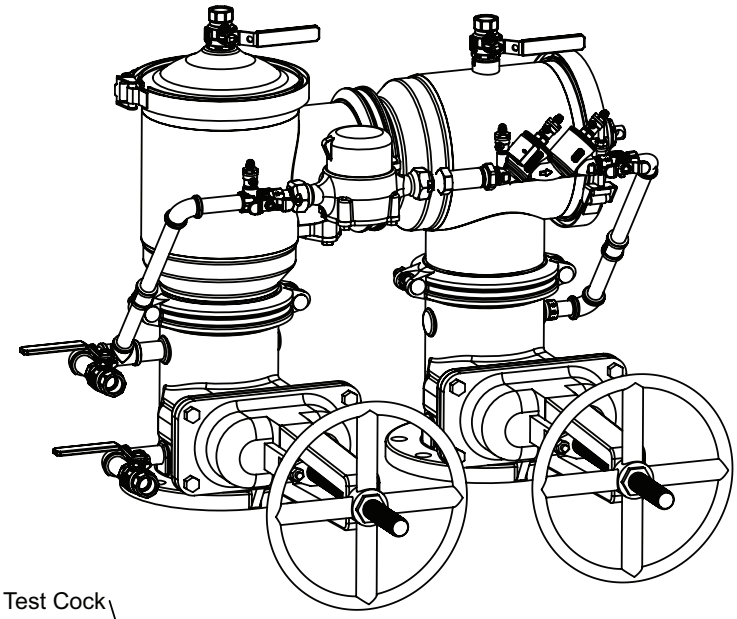

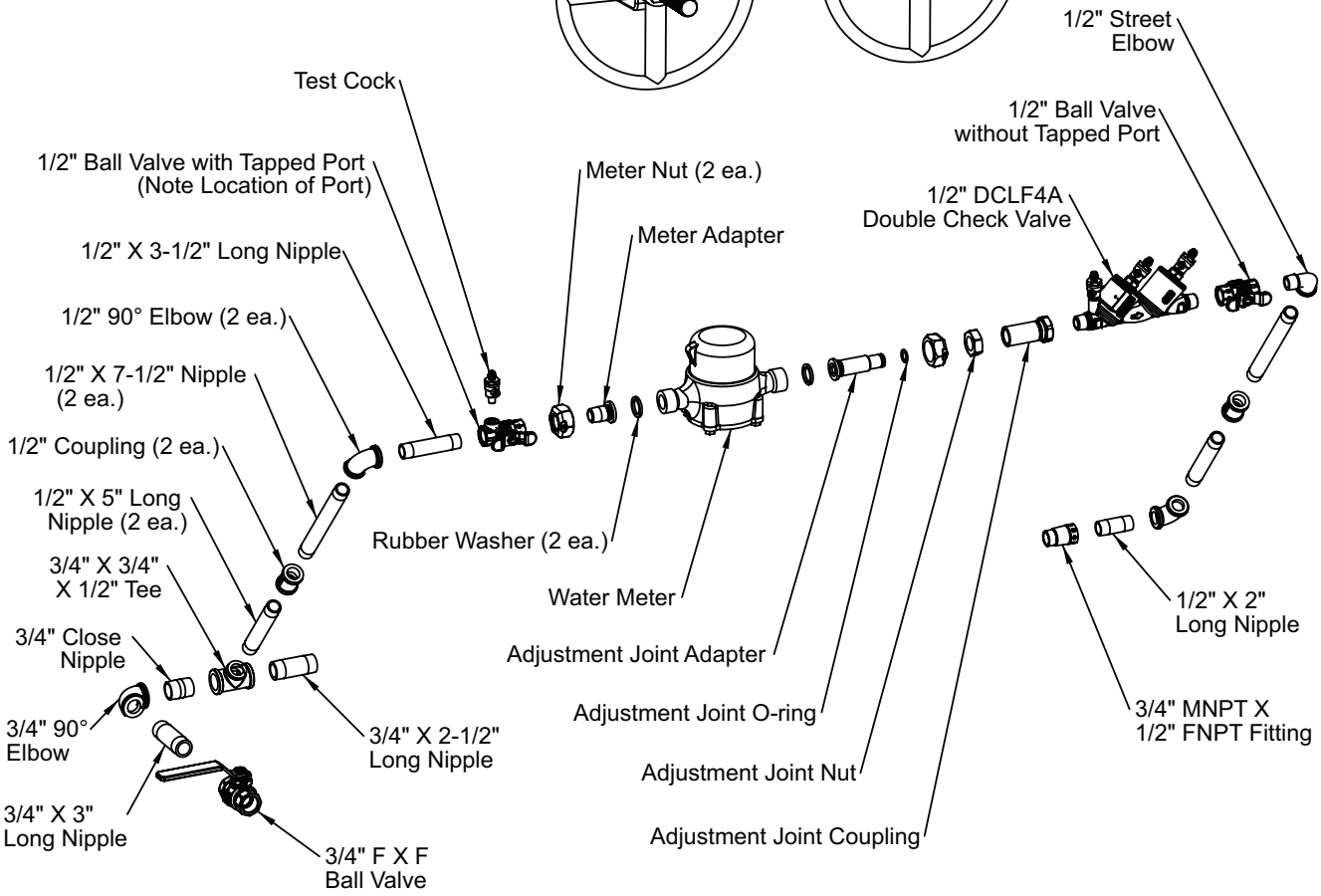

APPLY TEFLON TAPE TO PIPE THREADS AND INSTALL COMPONENTS AS SHOWN.

BYPASS KITS

8" TYPE 1 BYPASS LINE

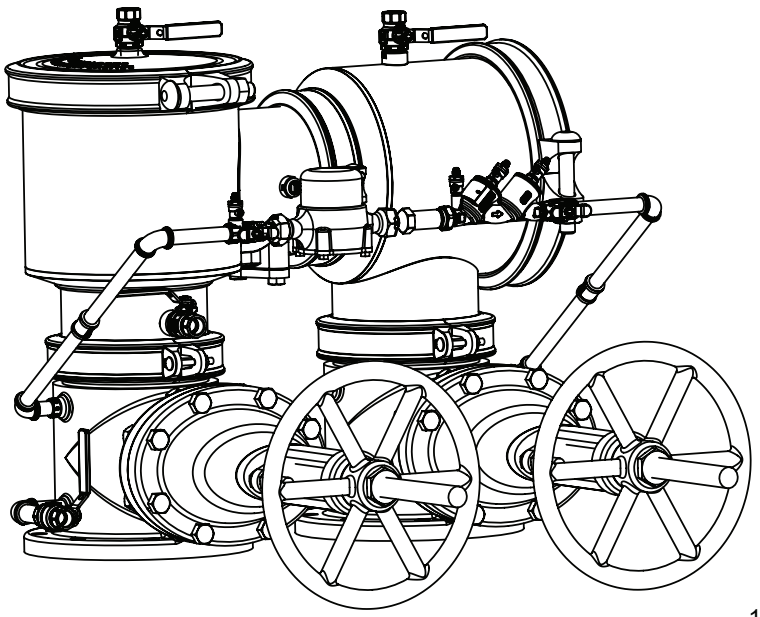

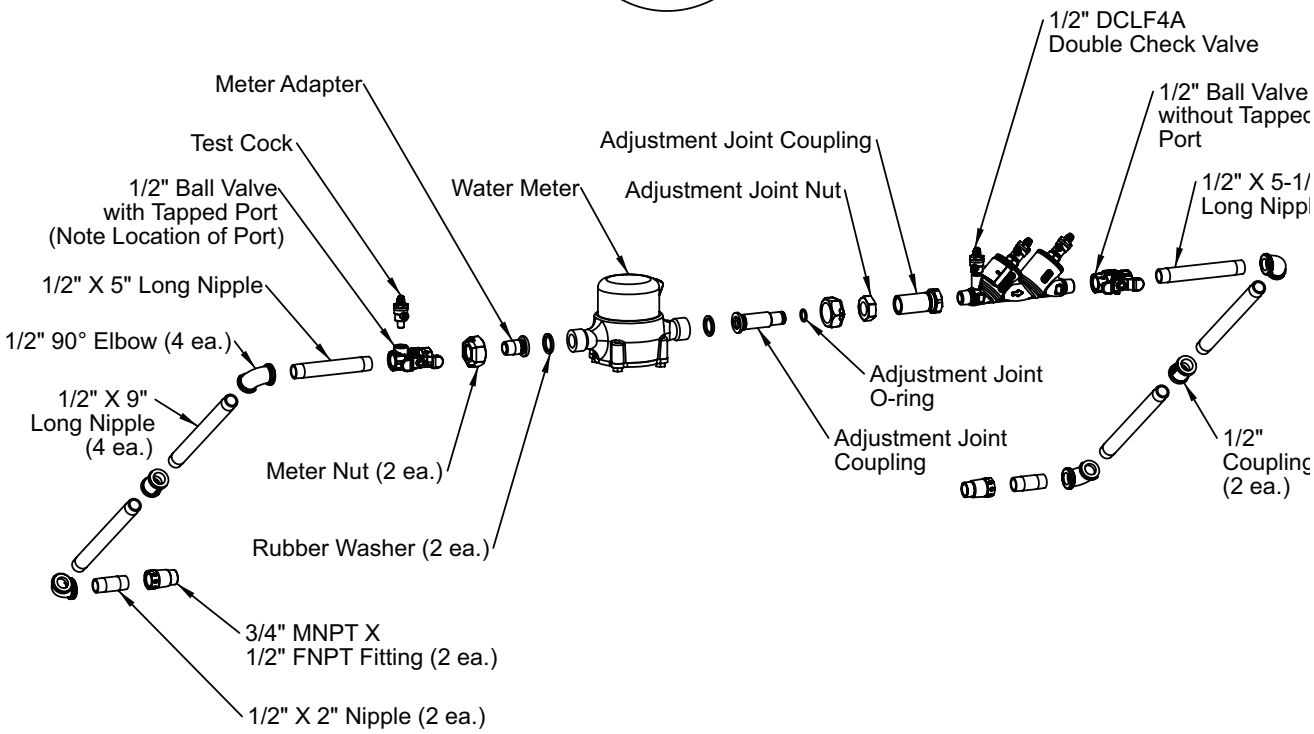

APPLY TEFLON TAPE TO PIPI
THREADS AND INSTALL
COMPONENTS AS SHOWN.

BFMMDC4ANLBF
ES1597 REV A

BYPASS KITS

10" TYPE 1 BYPASS LINE

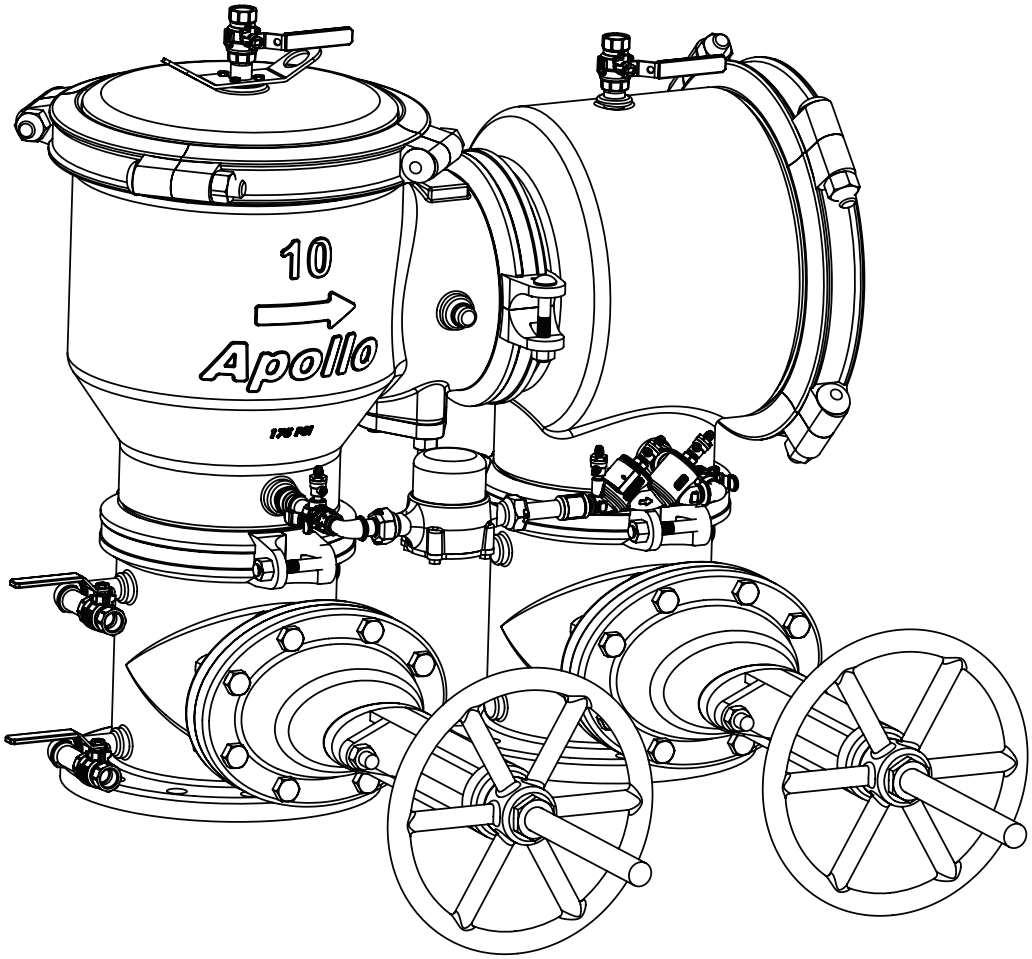

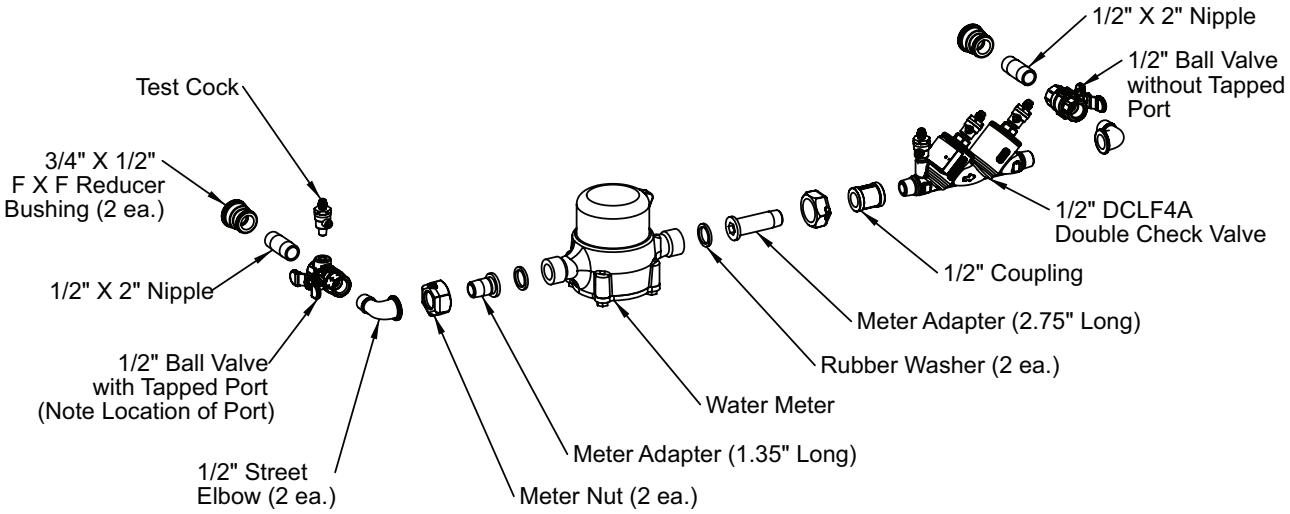

APPLY TEFLON TAPE TO PIPE THREADS AND INSTALL COMPONENTS AS SHOWN.

BYPASS KITS

12" TYPE 1 BYPASS LINE

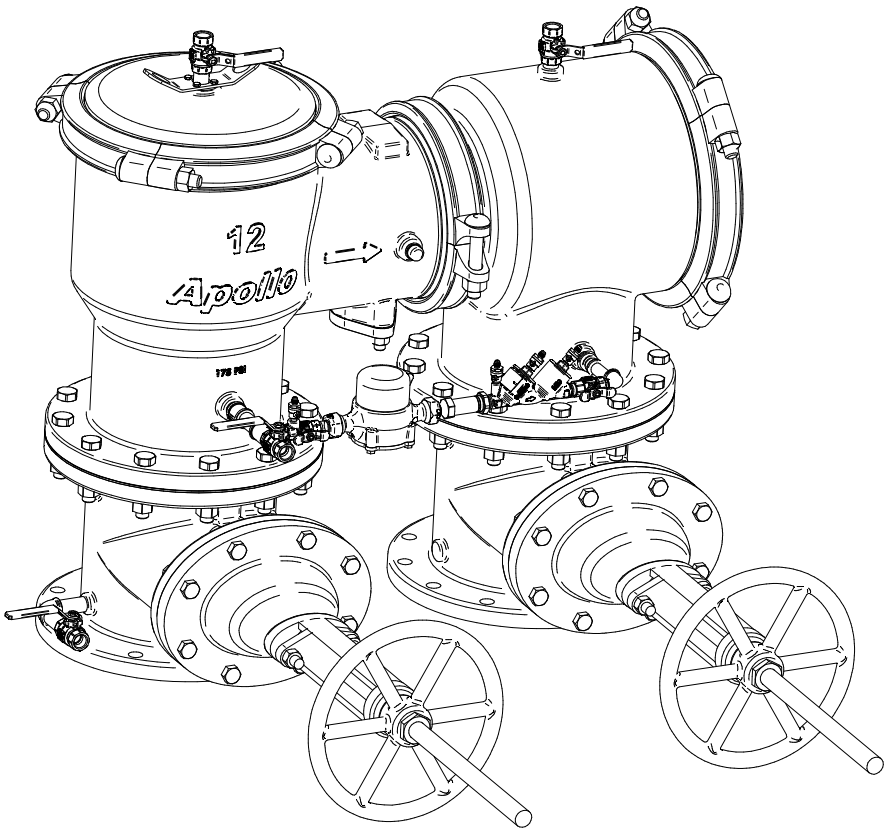

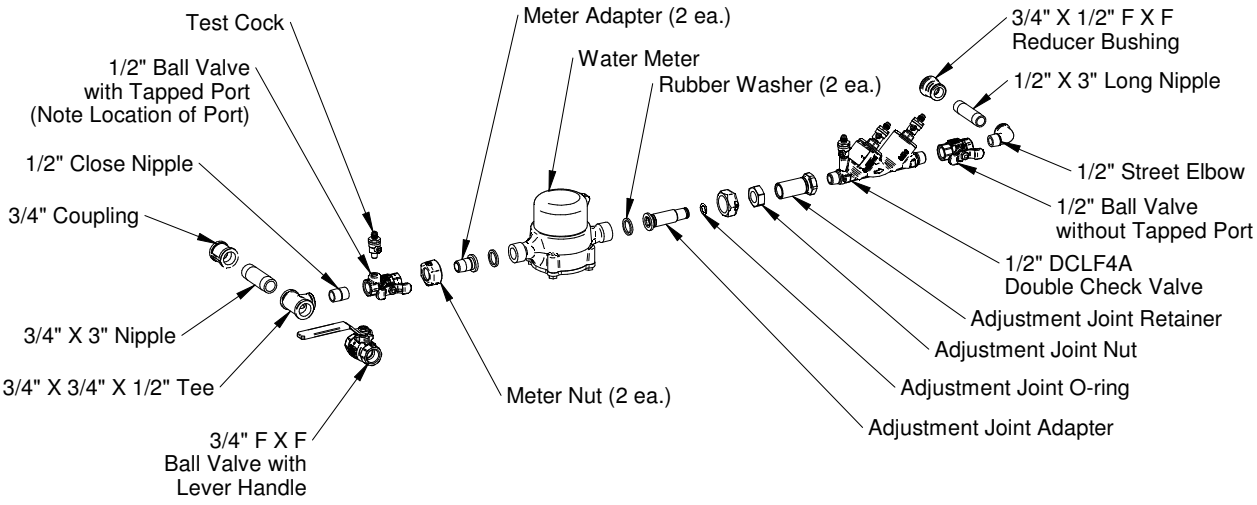

APPLY TEFLON TAPE TO PIPE THREADS AND INSTALL COMPONENTS AS SHOWN.

BFMMDC4ANLBF
ES1597 REV A

BYPASS KITS

2-1/2" & 3" TYPE 2 BYPASS LINE

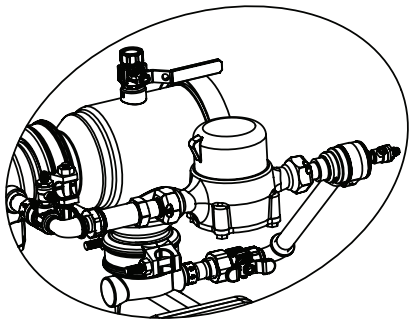

APPLY TEFLON TAPE TO PIPE THREADS AND INSTALL COMPONENTS AS SHOWN.

4" TYPE 2 BYPASS LINE

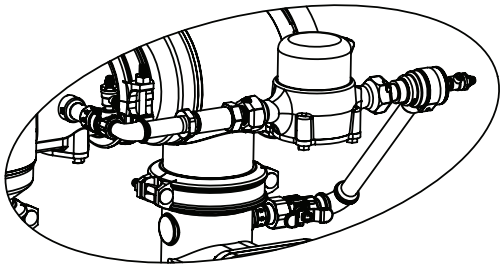

BYPASS KITS

6" TYPE 2 BYPASS LINE

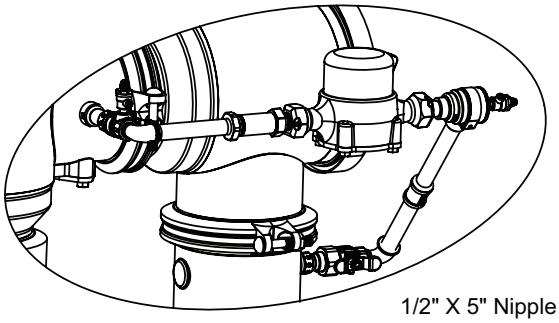

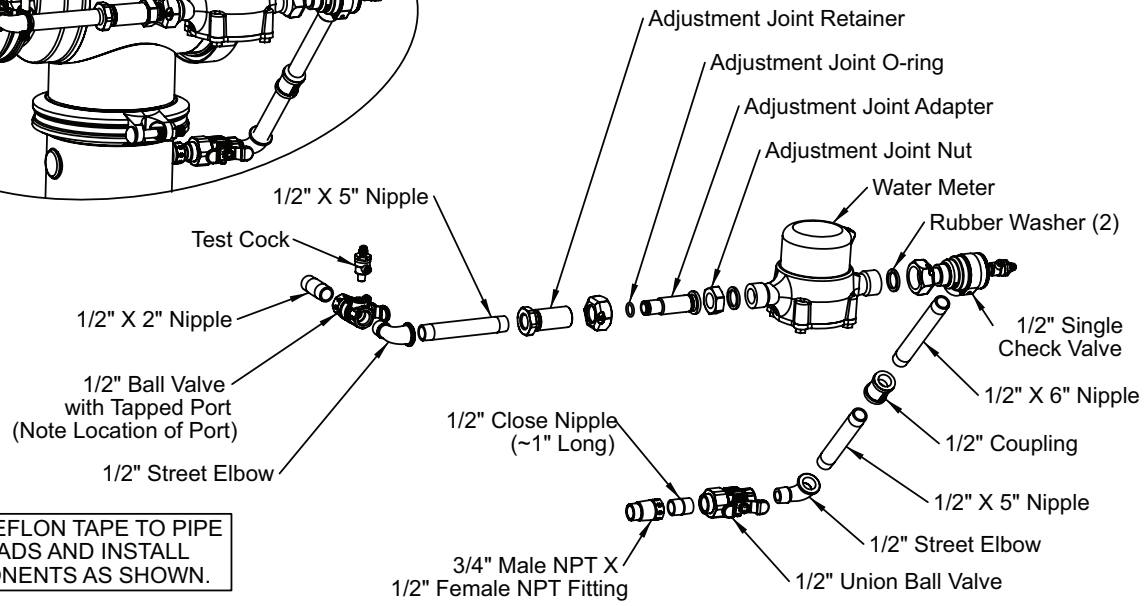

APPLY TEFLON TAPE TO PIPE THREADS AND INSTALL COMPONENTS AS SHOWN.

8" TYPE 2 BYPASS LINE

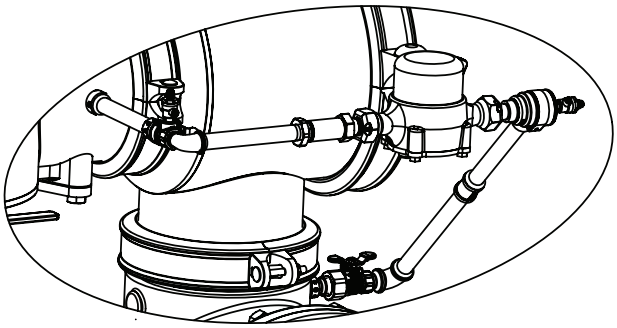

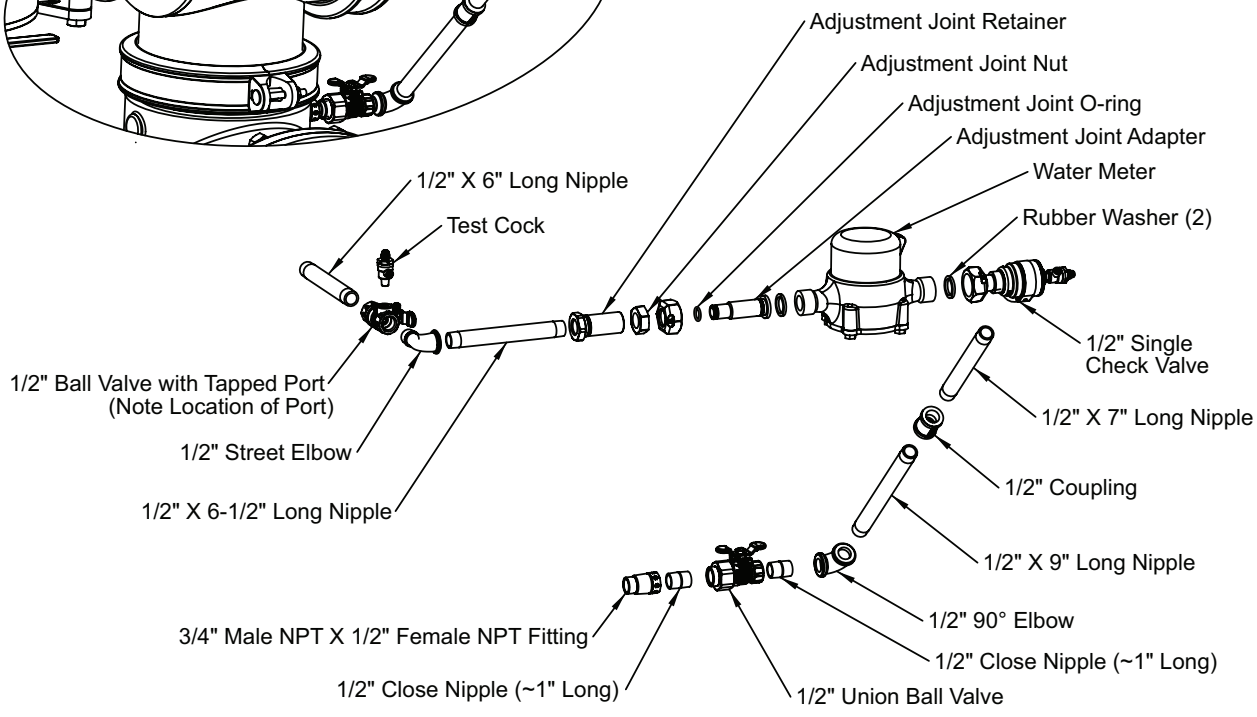

BFMMDC4ANLBF
ES1597 REV A

BYPASS KITS

10" TYPE 2 BYPASS LINE

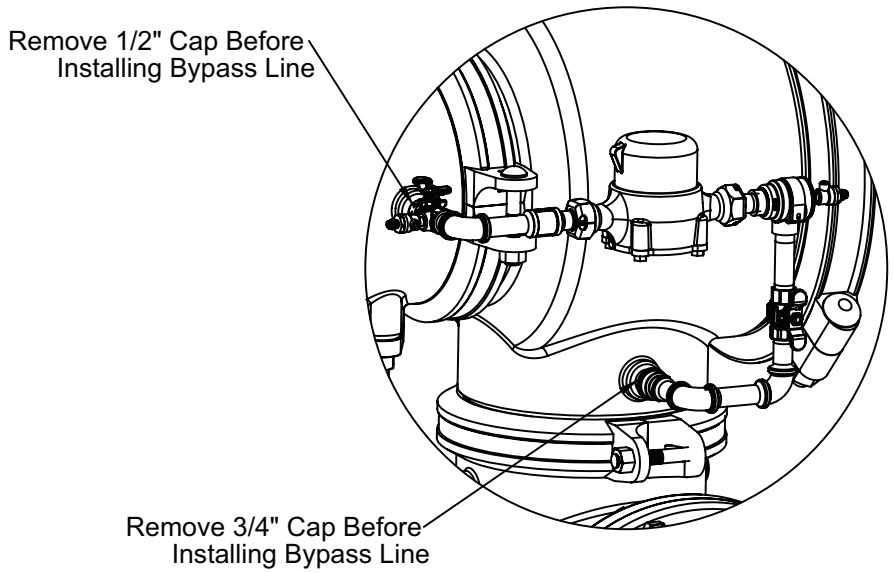

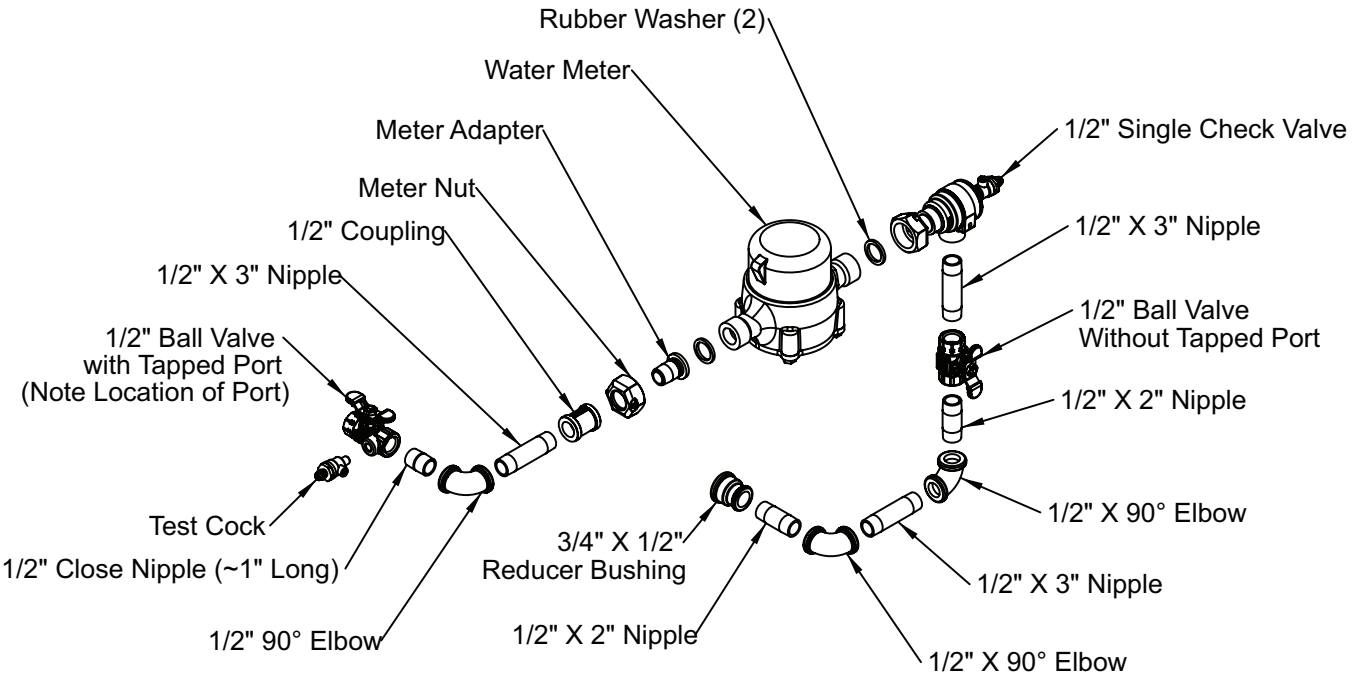

APPLY TEFLON TAPE TO PIPE THREADS AND INSTALL COMPONENTS AS SHOWN.

BYPASS KITS

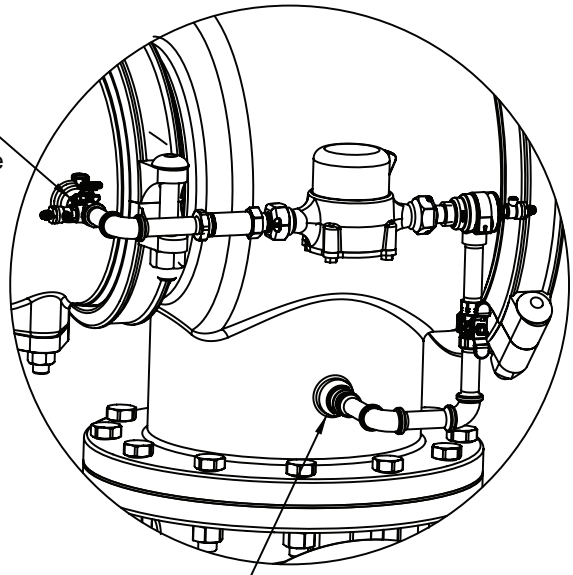

12" TYPE 2 BYPASS LINE

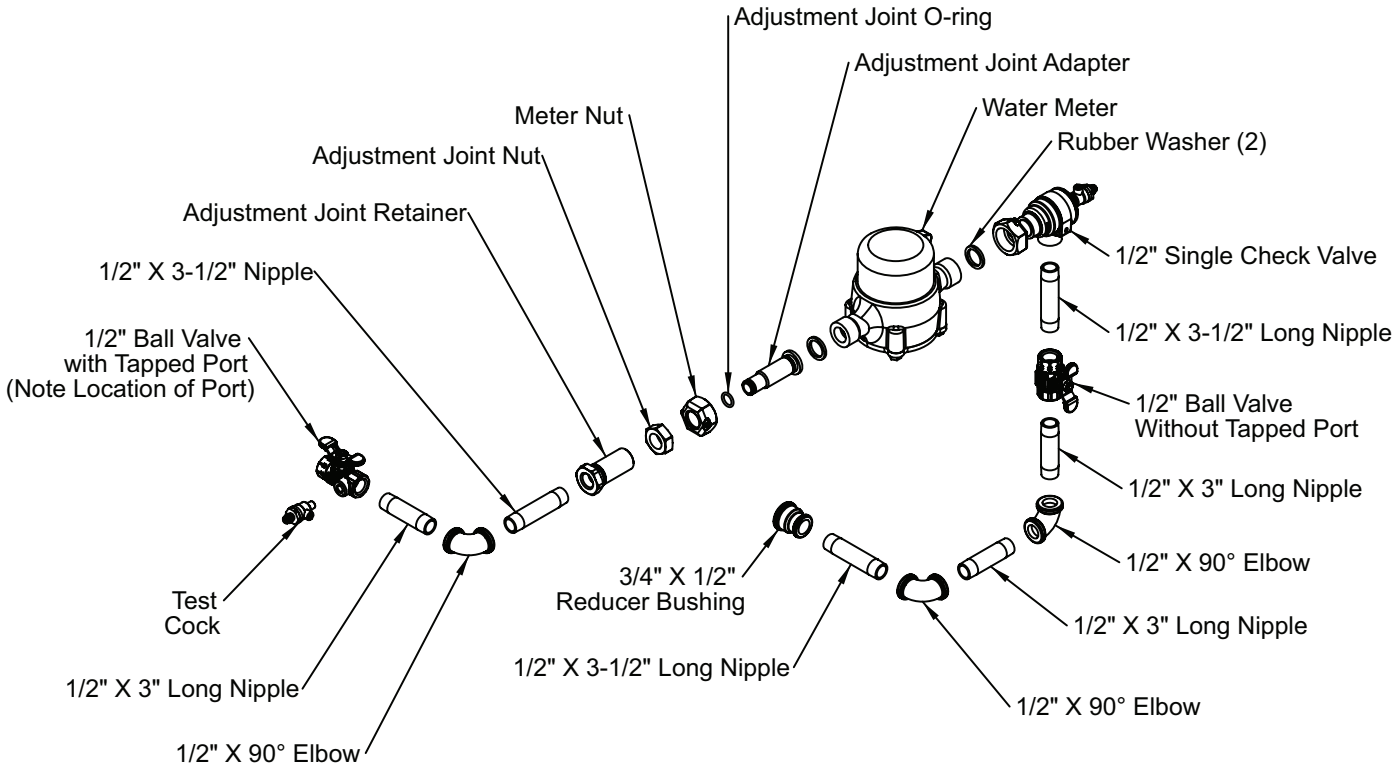

APPLY TEFLON TAPE TO PIPE THREADS AND INSTALL COMPONENTS AS SHOWN.

IX. MAINTENANCE INSTRUCTIONS - BYPASS DOUBLE CHECK (TYPE 1)

A. DISASSEMBLY - CHECK VALVE MODULE

1. Close #2 bypass line shut-off valve, then close #1 bypass line shut-off valve.
2. Bleed pressure from the assembly by opening all test cocks on bypass DC.
3. Unscrew cap using hex head provided.
4. Push down and turn the spring retainer 90° to remove. Remove the spring. Remove the poppet from the check seat.
5. Normally, the check seat need not be removed. If removal is required, rock it back and forth while pulling outward.

B. DISASSEMBLY - CHECK VALVE POPPET

CAUTION: Do not use pliers or other tools, which may damage or scratch the plastic stem.

1. Holding the poppet assembly in one hand, remove screw and retaining washer.
2. Remove the seat disc.
3. All parts should be carefully inspected for any damage or excessive wear and thoroughly rinsed in clean water prior to reassembly. Replace worn parts as necessary.

C. ASSEMBLY - CHECK VALVE POPPET

1. Install new or cleaned disc in poppet and secure with washer and screw.

D. ASSEMBLY - CHECK VALVE MODULE

1. If the check seat was removed, install the new o-ring and lubricate. Line up the seat with the bore and push it firmly into place.
2. Place and center the poppet assembly in the check seat.
3. Install the spring onto the poppet.
4. Install the spring retainer onto the spring by pushing down into the grooves of the check seat and turning 90°. Ensure spring retainer pops up about 1/8" and locks into the lugs.

CAUTION: Ensure the spring retainer orientation matches that in the parts list drawing or the device's flow will be significantly restricted (i.e. - do not install the spring retainer upside down).

5. Apply a thin coat of Apollo® supplied lubricant, DOW 111 or equal, on cap o-ring.
6. Install cap.

PARTS LIST & REPAIR KITS – BYPASS DOUBLE CHECK (TYPE 1)

W978705 DOUBLE CHECK VALVE (LEAD FREE*)

ITEM	PART #	DESCRIPTION	QTY
1	Q-6869-05	Body	1
2	I-9024-00	Nameplate	1
3	I-2614-00	Nameplate Tack	2
4	78LF-292-01	Test Cock	3
5	F-3846-05	Cap	2
6	D-4881-00	Cap O-ring	2
7	D-4880-00	Check O-ring	2
8	W-9075-05	Check Module	2
9	L-7815-00	Check Seat	1
10	B-3279-00	Screw	1
11	E-2372-00	Disc-retaining Washer	1
12	D-4771-00	Seat Disc	1
13	K-4491-00	Poppet	1
14	A-2505-00	Spring	1
15	L-7814-00	Spring Retainer	1

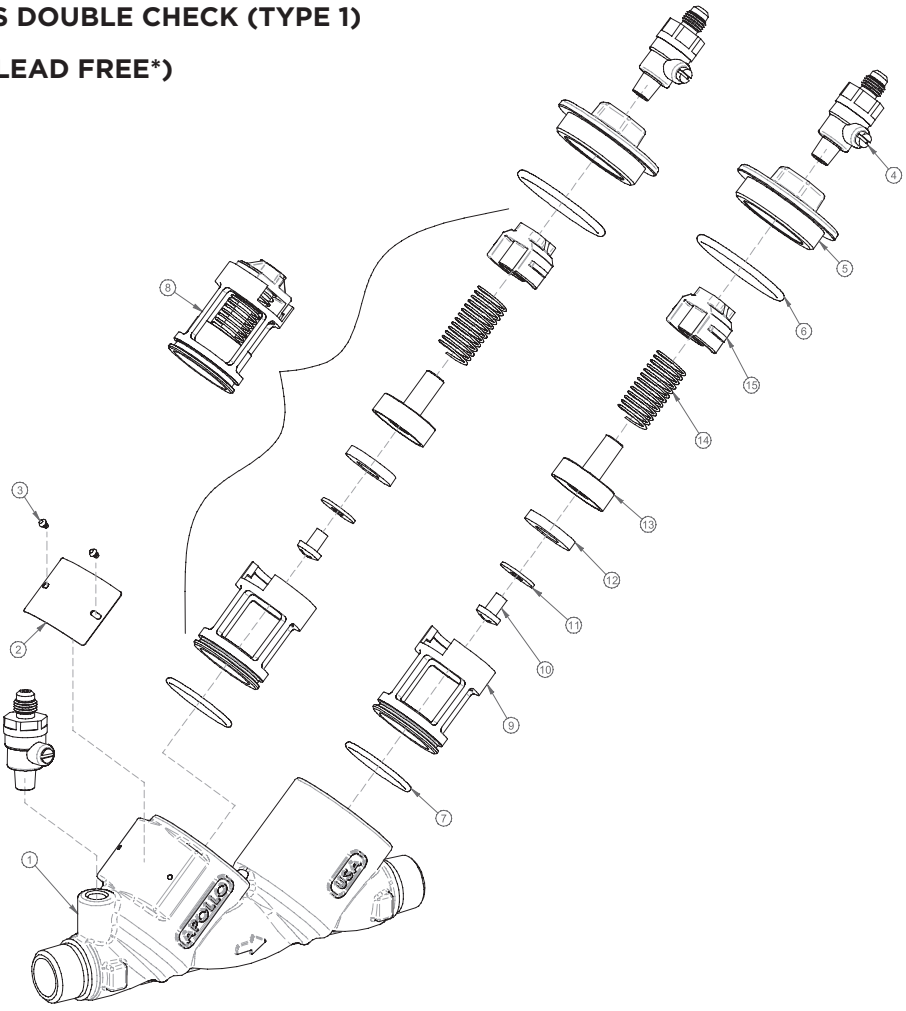

Individual parts are only available for bulk sales. Please refer to the appropriate repair kits below.
*Note: All bronze components listed are lead-free**
**LEAD FREE: The wetted surfaces of this product shall contain no more than 0.25% lead by weighted average. Complies with CA AB1953, VT Act 193, MD HB372, LA HB471, and Federal Public Law 111-380.*

BYPASS DC REPAIR KITS

CHECK RUBBER REPAIR KIT
4A-003-01: Kit includes items 6, 7, and 12 (1 ea.)

DC CHECK REPAIR KIT
4A-003-02: Kit includes items 6, 7, and 8 (1 ea.)

DC COMPLETE REPAIR KIT

4A-003-08: Kit includes items 6, 7, and 8 (2 ea.)

BFMMDC4ANLBF
ES1597 REV A

SHUT-OFF VALVE PART NUMBERS
(UL LISTED ASSEMBLIES MUST HAVE INDICATING TYPE SHUT-OFF VALVES ON INLET AND OUTLET.)

SHUT-OFF VALVE OPTIONS -- 2-1/2"			
ASSEMBLY DESCRIPTION (INLET X OUTLET)	INLET	OUTLET	SUFFIX
FLANGE NRS X FLANGE NRS	W-5310-00	W-5310-00	-02
FLANGE OS&Y X FLANGE OS&Y	W-4733-00	W-4733-00	-03
FLANGE OS&Y X MONITORED BFV	W-4733-00	W-5244-00	-04
FLANGE OS&Y X GROOVED OS&Y	W-4733-00	W-5282-00	-07
GROOVED OS&Y X GROOVED OS&Y	W-5282-00	W-5282-00	-08
MONITORED BFV X MONITORED BFV	W-5244-00	W-5244-00	-09
GROOVE NRS X GROOVE NRS	W-9369-00	W-9369-00	-011
FLANGE NRS X GROOVE NRS	W-5310-00	W-9369-00	-012

SHUT-OFF VALVE OPTIONS -- 3"					
ASSEMBLY DESCRIPTION (INLET X OUTLET)	INLET	OUTLET	POST PLATE	OPERATING NUT	SUFFIX
FLANGE NRS X FLANGE NRS	W-5311-00	W-5311-00	N/A	N/A	-02
FLANGE OS&Y X FLANGE OS&Y	W-4734-00	W-4734-00	N/A	N/A	-03
FLANGE OS&Y X MONITORED BFV	W-4734-00	W-5245-00	N/A	N/A	-04
FLANGE OS&Y X FLANGE POST INDICATOR	W-4734-00	W-5311-00	E-2922-00	C-2640-00	-06
FLANGE OS&Y X GROOVE OS&Y	W-4734-00	W-5283-00	N/A	N/A	-07
GROOVE OS&Y X GROOVE OS&Y	W-5283-00	W-5283-00	N/A	N/A	-08
MONITORED BFV X MONITORED BFV	W-5245-00	W-5245-00	N/A	N/A	-09
FLANGE OS&Y X GROOVE POST INDICATOR	W-4734-00	W-9370-00	E-2922-00	C-2640-00	-010
GROOVE NRS X GROOVE NRS	W-9370-00	W-9370-00	N/A	N/A	-011
FLANGE NRS X GROOVE NRS	W-5311-00	W-9370-00	N/A	N/A	-012
FLANGE POST INDICATOR X MONITORED BFV	W-5311-00	W-5245-00	E-2922-00	C-2640-00	-013
FLANGE POST INDICATOR X FLANGE POST INDICATOR	W-5311-00	W-5311-00	E-2922-00	C-2640-00	-014
MONITORED BFV X FLANGE POST INDICATOR	W-5245-00	W-5311-00	E-2922-00	C-2640-00	-016
FLANGE POST INDICATOR X GROOVE OS&Y	W-5311-00	W-5283-00	E-2922-00	C-2640-00	-017
GROOVE OS&Y X GROOVE POST INDICATOR	W-5283-00	W-9370-00	E-2922-00	C-2640-00	-018
MONITORED BFV X GROOVE POST INDICATOR	W-5245-00	W-9370-00	E-2922-00	C-2640-00	-019
FLANGE POST INDICATOR X FLANGE OS&Y	W-5311-00	W-4734-00	E-2922-00	C-2640-00	-020

SHUT-OFF VALVE OPTIONS -- 4"					
ASSEMBLY DESCRIPTION (INLET X OUTLET)	INLET	OUTLET	POST PLATE	OPERATING NUT	SUFFIX
FLANGE NRS X FLANGE NRS	W-5312-00	W-5312-00	N/A	N/A	-02
FLANGE OS&Y X FLANGE OS&Y	W-4735-00	W-4735-00	N/A	N/A	-03
FLANGE OS&Y X MONITORED BFV	W-4735-00	W-5246-00	N/A	N/A	-04
FLANGE OS&Y X FLANGE POST INDICATOR	W-4735-00	W-5312-00	E-2922-00	C-2640-00	-06
FLANGE OS&Y X GROOVE OS&Y	W-4735-00	W-5284-00	N/A	N/A	-07
GROOVE OS&Y X GROOVE OS&Y	W-5284-00	W-5284-00	N/A	N/A	-08
MONITORED BFV X MONITORED BFV	W-5246-00	W-5246-00	N/A	N/A	-09
FLANGE OS&Y X GROOVE POST INDICATOR	W-9126-00	W-9371-00	E-2922-00	C-2640-00	-010
GROOVE NRS X GROOVE NRS	W-9371-00	W-9371-00	N/A	N/A	-011
FLANGE NRS X GROOVE NRS	W-5312-00	W-9371-00	N/A	N/A	-012
FLANGE POST INDICATOR X MONITORED BFV	W-5312-00	W-5246-00	E-2922-00	C-2640-00	-013
FLANGE POST INDICATOR X FLANGE POST INDICATOR	W-5312-00	W-5312-00	E-2922-00	C-2640-00	-014
MONITORED BFV X FLANGE POST INDICATOR	W-5246-00	W-5312-00	E-2922-00	C-2640-00	-016
FLANGE POST INDICATOR X GROOVE OS&Y	W-5312-00	W-5284-00	E-2922-00	C-2640-00	-017
GROOVE OS&Y X GROOVE POST INDICATOR	W-5284-00	W-9371-00	E-2922-00	C-2640-00	-018
MONITORED BFV X GROOVE POST INDICATOR	W-5246-00	W-9371-00	E-2922-00	C-2640-00	-019
FLANGE POST INDICATOR X FLANGE OS&Y	W-5312-00	W-4735-00	E-2922-00	C-2640-00	-020

SHUT-OFF VALVE PART NUMBERS

(UL LISTED ASSEMBLIES MUST HAVE INDICATING TYPE SHUT-OFF VALVES ON INLET AND OUTLET.)

SHUT-OFF VALVE OPTIONS -- 6”					
ASSEMBLY DESCRIPTION (INLET X OUTLET)	**INLET**	**OUTLET**	**POST PLATE**	**OPERATING NUT**	**SUFFIX**
FLANGE NRS X FLANGE NRS	W-5313-00	W-5313-00	N/A	N/A	-02
FLANGE OS&Y X FLANGE OS&Y	W-4736-00	W-4736-00	N/A	N/A	-03
FLANGE OS&Y X MONITORED BFV	W-4736-00	W-5247-00	N/A	N/A	-04
FLANGE OS&Y X FLANGE POST INDICATOR	W-4736-00	W-5313-00	E-2923-00	C-2641-00	-06
FLANGE OS&Y X GROOVE OS&Y	W-4736-00	W-5285-00	N/A	N/A	-07
GROOVE OS&Y X GROOVE OS&Y	W-5285-00	W-5285-00	N/A	N/A	-08
MONITORED BFV X MONITORED BFV	W-5247-00	W-5247-00	N/A	N/A	-09
FLANGE OS&Y X GROOVE POST INDICATOR	W-4736-00	W-9372-00	E-2923-00	C-2641-00	-010
GROOVE NRS X GROOVE NRS	W-9372-00	W-9372-00	N/A	N/A	-011
FLANGE NRS X GROOVE NRS	W-5313-00	W-9372-00	N/A	N/A	-012
FLANGE POST INDICATOR X MONITORED BFV	W-5313-00	W-5247-00	E-2923-00	C-2641-00	-013
FLANGE POST INDICATOR X FLANGE POST INDICATOR	W-5313-00	W-5313-00	E-2923-00	C-2641-00	-014
MONITORED BFV X FLANGE POST INDICATOR	W-5247-00	W-5313-00	E-2923-00	C-2641-00	-016
FLANGE POST INDICATOR X GROOVE OS&Y	W-5313-00	W-5285-00	E-2923-00	C-2641-00	-017
GROOVE OS&Y X GROOVE POST INDICATOR	W-5285-00	W-9372-00	E-2923-00	C-2641-00	-018
MONITORED BFV X GROOVE POST INDICATOR	W-5247-00	W-9372-00	E-2923-00	C-2641-00	-019
FLANGE POST INDICATOR X FLANGE OS&Y	W-5313-00	W-4736-00	E-2923-00	C-2641-00	-020

SHUT-OFF VALVE OPTIONS -- 8”					
ASSEMBLY DESCRIPTION (INLET X OUTLET)	**INLET**	**OUTLET**	**POST PLATE**	**OPERATING NUT**	**SUFFIX**
FLANGE NRS X FLANGE NRS	W-5314-00	W-5314-00	N/A	N/A	-02
FLANGE OS&Y X FLANGE OS&Y	W-4737-00	W-4737-00	N/A	N/A	-03
FLANGE OS&Y X MONITORED BFV	W-4737-00	W-5248-00	N/A	N/A	-04
FLANGE OS&Y X FLANGE POST INDICATOR	W-4737-00	W-5314-00	E-2924-00	C-2642-00	-06
FLANGE OS&Y X GROOVE OS&Y	W-4737-00	W-5286-00	N/A	N/A	-07
GROOVE OS&Y X GROOVE OS&Y	W-5286-00	W-5286-00	N/A	N/A	-08
MONITORED BFV X MONITORED BFV	W-5248-00	W-5248-00	N/A	N/A	-09
FLANGE OS&Y X GROOVE POST INDICATOR	W-4737-00	W-9373-00	E-2924-00	C-2642-00	-010
GROOVE NRS X GROOVE NRS	W-9373-00	W-9373-00	N/A	N/A	-011
FLANGE NRS X GROOVE NRS	W-5314-00	W-9373-00	N/A	N/A	-012
FLANGE POST INDICATOR X MONITORED BFV	W-5314-00	W-5248-00	E-2924-00	C-2642-00	-013
FLANGE POST INDICATOR X FLANGE POST INDICATOR	W-5314-00	W-5314-00	E-2924-00	C-2642-00	-014
MONITORED BFV X FLANGE POST INDICATOR	W-5248-00	W-5314-00	E-2924-00	C-2642-00	-016
FLANGE POST INDICATOR X GROOVE OS&Y	W-5314-00	W-5286-00	E-2924-00	C-2642-00	-017
GROOVE OS&Y X GROOVE POST INDICATOR	W-5286-00	W-9373-00	E-2924-00	C-2642-00	-018
MONITORED BFV X GROOVE POST INDICATOR	W-5248-00	W-9373-00	E-2924-00	C-2642-00	-019
FLANGE POST INDICATOR X FLANGE OS&Y	W-5314-00	W-4737-00	E-2924-00	C-2642-00	-020

BFMMDC4ANLBF
ES1597 REV A

SHUT-OFF VALVE PART NUMBERS
(UL LISTED ASSEMBLIES MUST HAVE INDICATING TYPE SHUT-OFF VALVES ON INLET AND OUTLET.)

SHUT-OFF VALVE OPTIONS -- 10”					
ASSEMBLY DESCRIPTION (INLET X OUTLET)	**INLET**	**OUTLET**	**POST PLATE**	**OPERATING NUT**	**SUFFIX**
FLANGE NRS X FLANGE NRS	W-5315-00	W-5315-00	N/A	N/A	-02
FLANGE OS&Y X FLANGE OS&Y	W-4738-00	W-4738-00	N/A	N/A	-03
FLANGE OS&Y X MONITORED BFV	W-4738-00	W-5249-00	N/A	N/A	-04
FLANGE OS&Y X FLANGE POST INDICATOR	W-4738-00	W-5315-00	E-2925-00	C-2643-00	-06
FLANGE OS&Y X GROOVE OS&Y	W-4738-00	W-5321-00	N/A	N/A	-07
GROOVE OS&Y X GROOVE OS&Y	W-5321-00	W-5321-00	N/A	N/A	-08
MONITORED BFV X MONITORED BFV	W-5249-00	W-5249-00	N/A	N/A	-09
FLANGE OS&Y X GROOVE POST INDICATOR	W-4738-00	W-2341-00	E-2925-00	C-2643-00	-010
GROOVE NRS X GROOVE NRS	W-2341-00	W-2341-00	N/A	N/A	-011
FLANGE NRS X GROOVE NRS	W-5315-00	W-2341-00	N/A	N/A	-012
FLANGE POST INDICATOR X MONITORED BFV	W-5315-00	W-5249-00	E-2925-00	C-2643-00	-013
FLANGE POST INDICATOR X FLANGE POST INDICATOR	W-5315-00	W-5315-00	E-2925-00	C-2643-00	-014
MONITORED BFV X FLANGE POST INDICATOR	W-5249-00	W-5315-00	E-2925-00	C-2643-00	-016
FLANGE POST INDICATOR X GROOVE OS&Y	W-5315-00	W-5321-00	E-2925-00	C-2643-00	-017
GROOVE OS&Y X GROOVE POST INDICATOR	W-5321-00	W-2341-00	E-2925-00	C-2643-00	-018
MONITORED BFV X GROOVE POST INDICATOR	W-5249-00	W-2341-00	E-2925-00	C-2643-00	-019
FLANGE POST INDICATOR X FLANGE OS&Y	W-5315-00	W-4738-00	E-2925-00	C-2643-00	-020

SHUT-OFF VALVE OPTIONS -- 12”					
ASSEMBLY DESCRIPTION (INLET X OUTLET)	**INLET**	**OUTLET**	**POST PLATE**	**OPERATING NUT**	**SUFFIX**
FLANGE NRS X FLANGE NRS	W-9529-00	W-9529-00	N/A	N/A	-02
FLANGE OS&Y X FLANGE OS&Y	W-9528-00	W-9528-00	N/A	N/A	-03
FLANGE OS&Y X FLANGE POST INDICATOR	W-9528-00	W-9529-00	E-2925-00	C-2643-00	-06

"Apollo"®

PHONE: (704) 841-6000
FAX: (704) 841-6020

Regional Management List
now available online at:
http://conbra.co/rmlist

97 IOM BFMMDC4ANLBF rev.a 8/17