CHICAGO FAUCETS®
a Geberit company

2100 SOUTH CLEARWATER DRIVE
DES PLAINES, ILLINOIS 60018-5999

FITTING NO.
895-317VPC
SUBMITTED MODEL NO.

JOB NAME

ITEM NO.

SUBMITTED AS SHOWN	
SUBMITTED AS NOTED	
SEE ATTACHED FOR SUBMITTED MODIFICATION	

ADA COMPLIANT

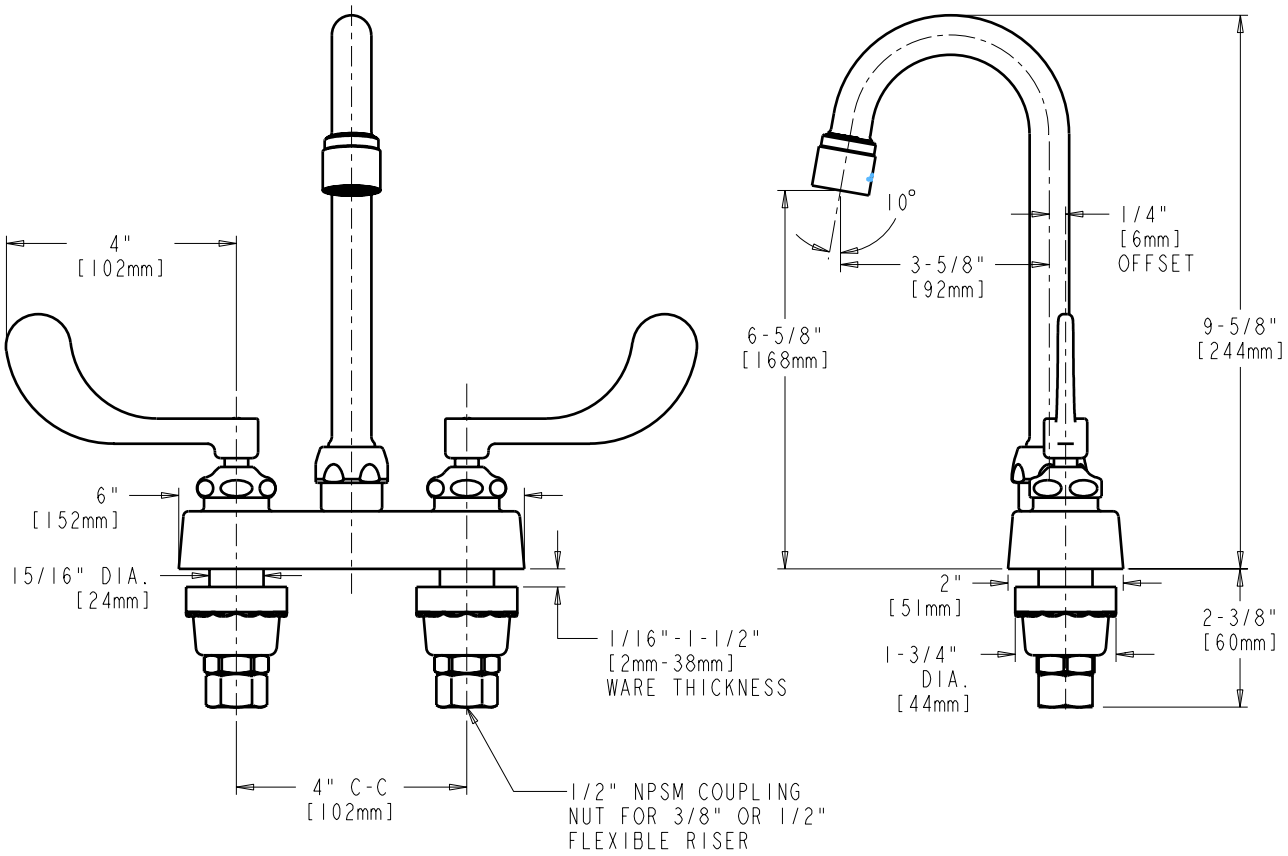

ROUGHING IN DIMENSIONS MAY VARY AND ARE SUBJECT TO CHANGE. NO RESPONSIBILITY IS ASSUMED FOR USE OF SUPERCEDED OR VOIDED DATA.

TECHNICAL DATA

- DECK MOUNTED LAVATORY FAUCET
- GNIA RIGID/SWING GOOSENECK SPOUT
- 317 INDEXED WRISTBLADE HANDLES WITH VANDAL PROOF SCREWS
- QUATURN OPERATING CARTRIDGES
- FINISH: CHROME PLATE
- E3VP VANDAL RESISTANT SOFTFLO AERATOR
- 2.2 GPM [8.3 L/min.] MAXIMUM FLOW RATE
- ASME A112.18.1M COMPLIANT
- CSA B125 COMPLIANT
- NSF 61 COMPLIANT

DATE: 08-23-07
BY: SID
CHK'D:
APP'D:
REV:

895-317VPC