CHICAGO FAUCETS®
Last As Long As The Building

2100 SOUTH CLEARWATER DRIVE
DES PLAINES, ILLINOIS 60018-5999

FITTING NO.
895-317VPA
SUBMITTED MODEL NO.

JOB NAME

ITEM NO.

SUBMITTED AS SHOWN	
SUBMITTED AS NOTED	
SEE ATTACHED FOR SUBMITTED MODIFICATION	

ADA COMPLIANT

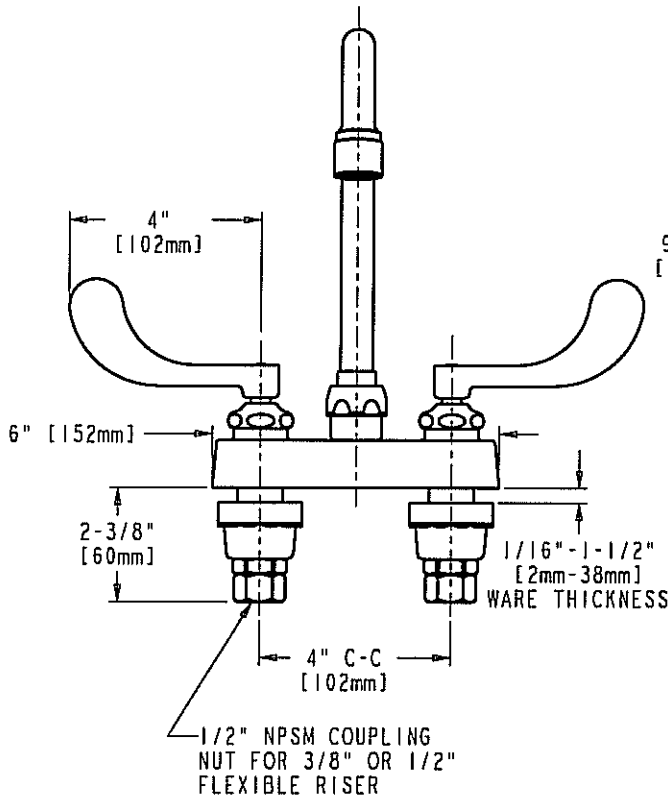

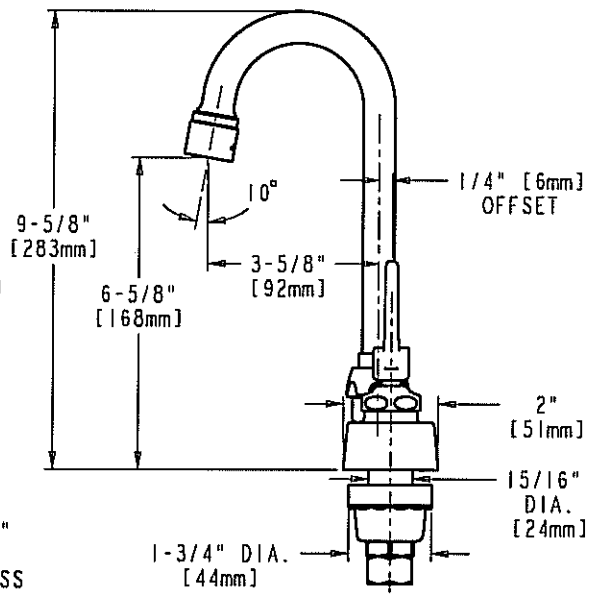

DIMENSIONS IN INCHES AND [MILLIMETERS]

TECHNICAL DATA

- DECK MOUNTED LAVATORY FAUCET
- GN1A RIGID/SWING GOOSENECK SPOUT
- 317 INDEXED WRISTBLADE HANDLES
- QUATURN OPERATING CARTRIDGES
- FINISH: CHROME PLATE
- E3VP VANDAL RESISTANT SOFTFLO AERATOR
- 2.2 GPM (8.3 L/min.) FLOW RATE
- ASME A112.18.1M COMPLIANT
- CSA B125 COMPLIANT
- NSF 61 COMPLIANT

DATE: 12-9-02
BY: JAR
CHK'D: SLD
APP'D:
REV: A

895-317VPA

ROUGHING IN DIMENSIONS MAY VARY AND ARE SUBJECT TO CHANGE. NO RESPONSIBILITY IS ASSUMED FOR USE OF SUPERCEDED OR VOIDED DATA.