Repair Parts

116.595.AB.1T

Touch-free, programmable faucet for Patient Care applications

Base Parts:

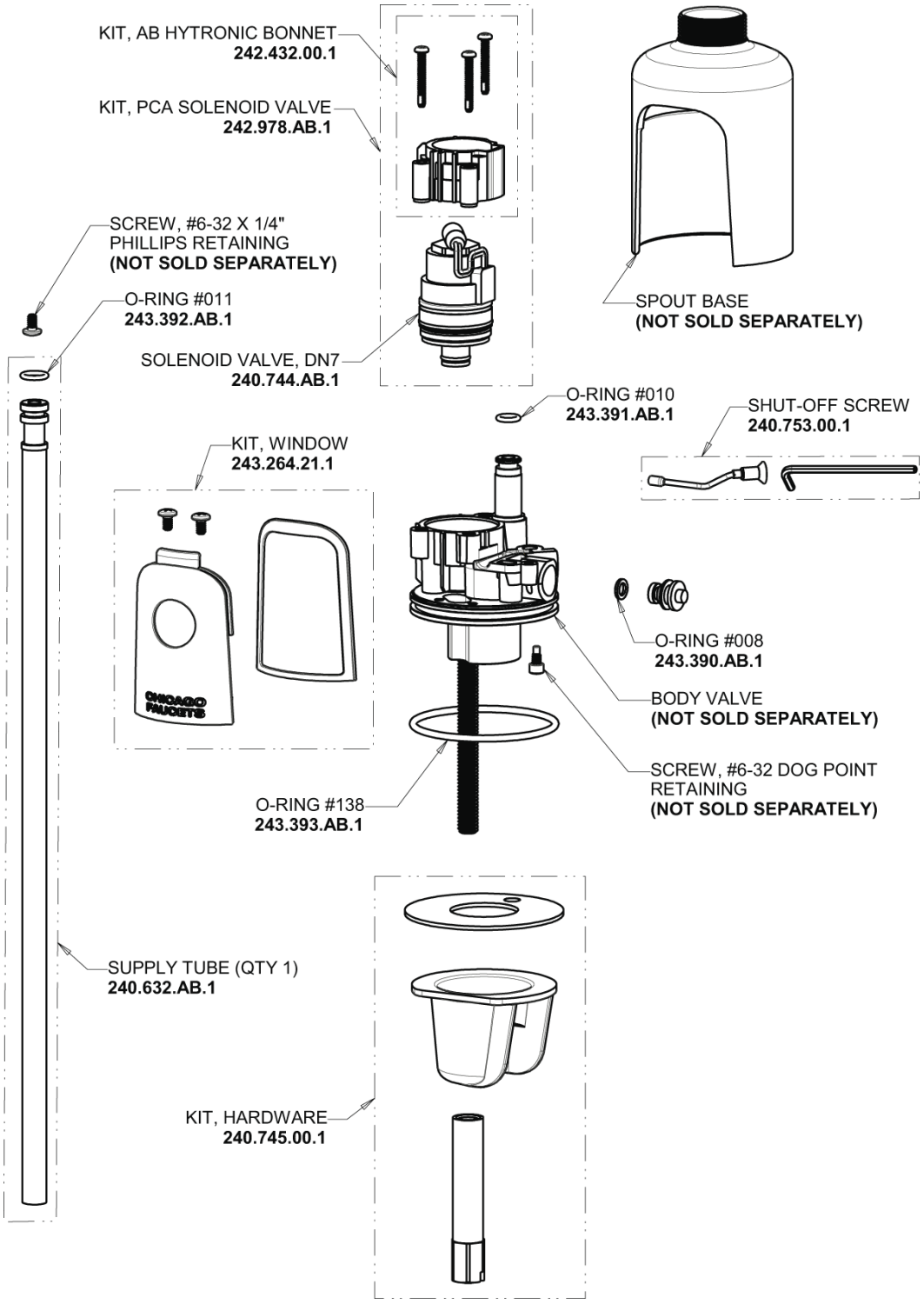

For Technical Assistance:

Phone: 800-TEC-TRUE (832-8783)

Email: techsupport.us@chicagofaucets.com

2100 South Clearwater Drive

Des Plaines, IL 60018

Phone: 847-803-5000

chicagofaucets.com

Repair Parts

116.595.AB.1T

Touch-free, programmable faucet for Patient Care applications

CHICAGO FAUCETS
Geberit Group

5-1/4" Rigid / Swing Gooseneck Spout
GN2AH8JKABCP

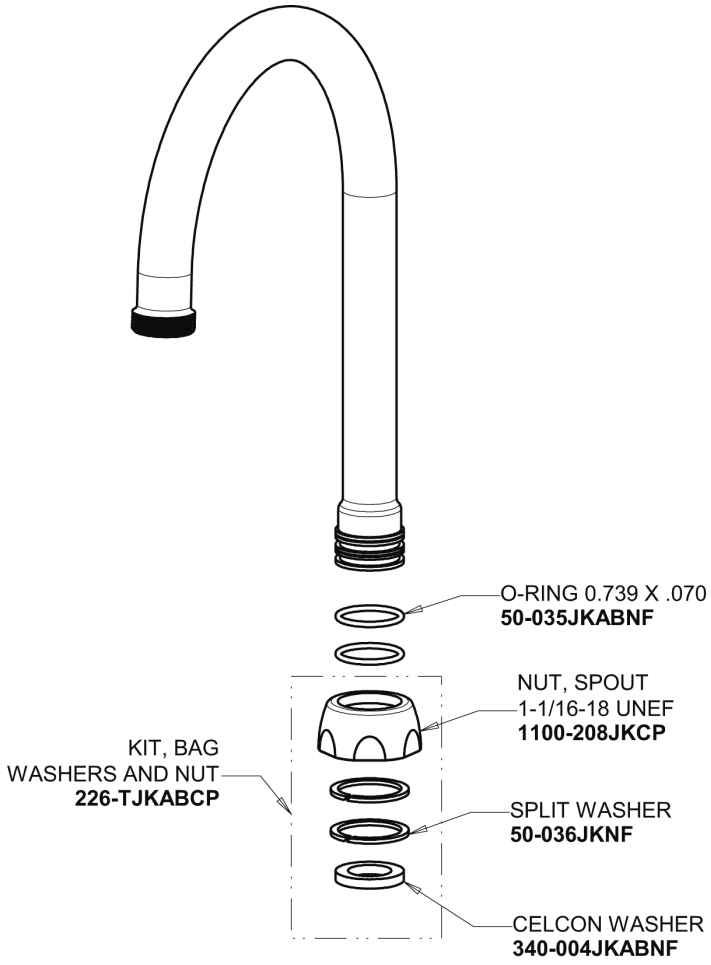

2.2 GPM (8.3 L/min) Vandal Proof Aerator
E3VPJKABCP

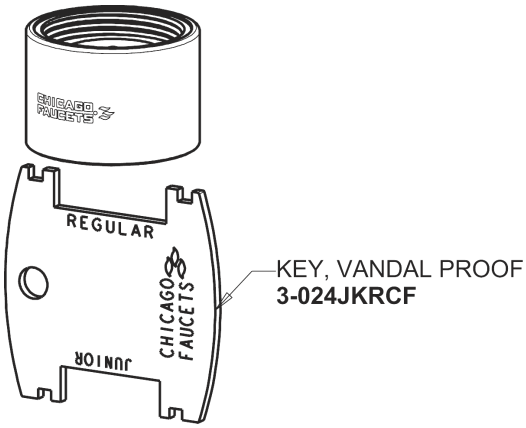

Electronic Module
242.433.00.1T

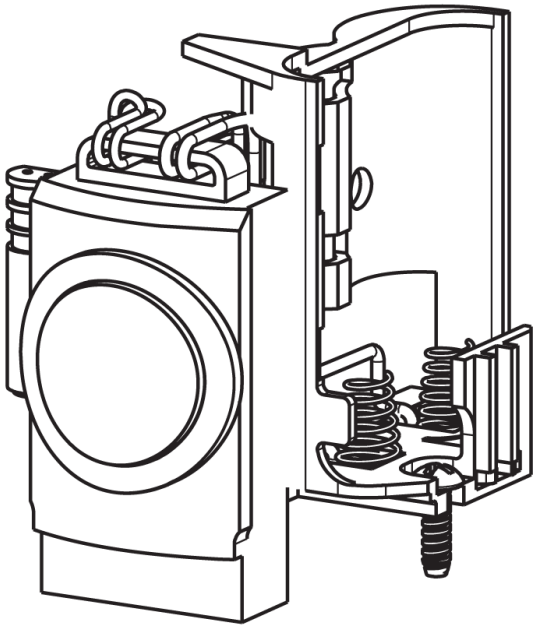

AC Power System
AC Power

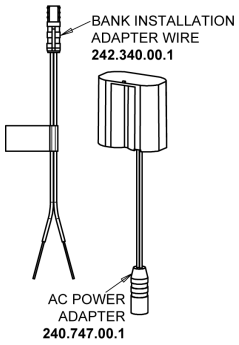

ERROR:
No image found.

For Technical Assistance:

Phone: 800-TEC-TRUE (832-8783)
Email: techsupport.us@chicagofaucets.com

2100 South Clearwater Drive
Des Plaines, IL 60018
Phone: 847-803-5000
chicagofaucets.com