Repair Parts

116.592.AB.1T

Touch-free, programmable faucet for Patient Care applications

Base Parts:

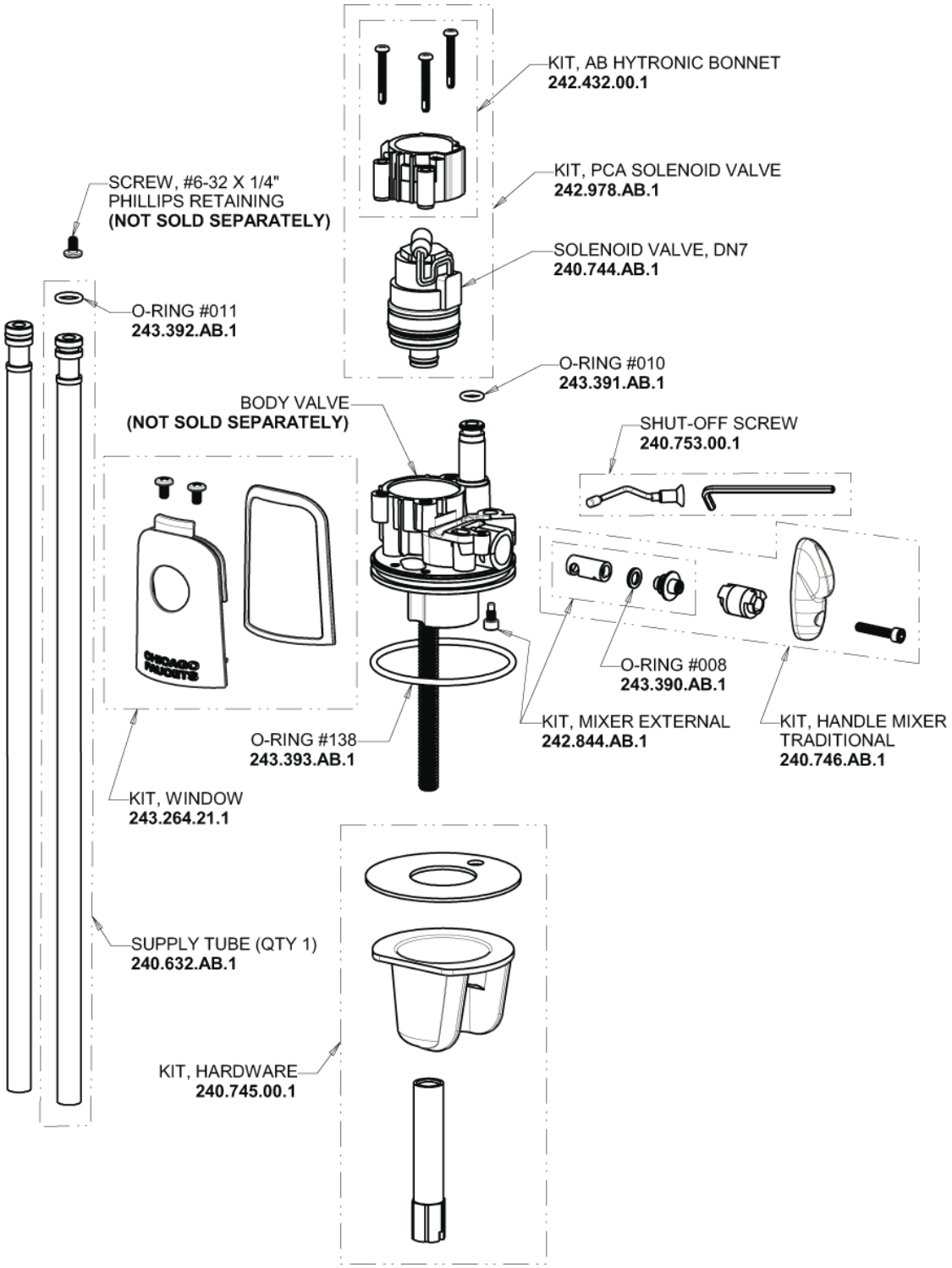

For Technical Assistance:

Phone: 800-TEC-TRUE (832-8783)

Email: techsupport.us@chicagofaucets.com

2100 South Clearwater Drive

Des Plaines, IL 60018

Phone: 847-803-5000

chicagofaucets.com

Repair Parts

116.592.AB.1T

Touch-free, programmable faucet for Patient Care applications

HyTronic Traditional Spout
244.487.00.1

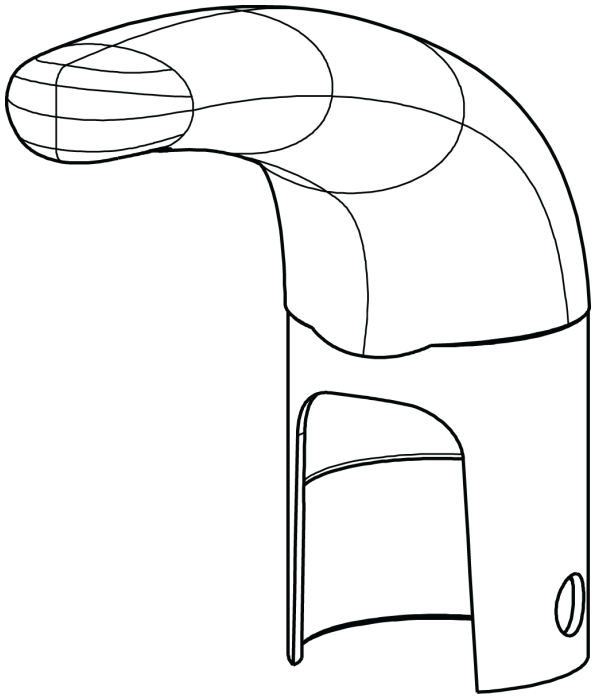

Electronic Module
242.433.00.1T

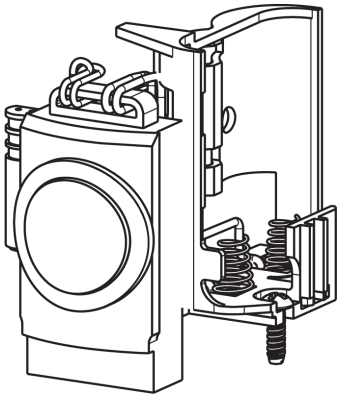

1.5 GPM (5.7 L/min) Vandal Proof Antimicrobial Non-Aerating Laminar Outlet
E62VPJKABCP

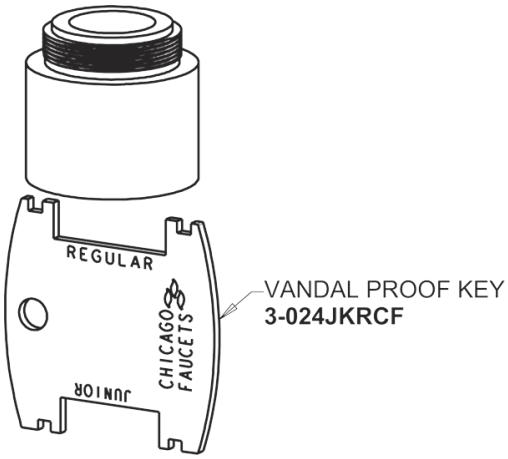

CR-P2 6V Lithium Battery
242.560.00.1

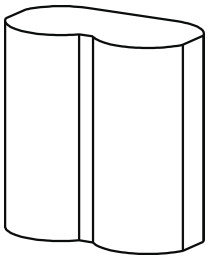

Inline Check Valve
243.315.AB.1

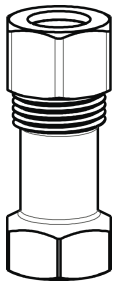

For Technical Assistance:

Phone: 800-TEC-TRUE (832-8783)
Email: techsupport.us@chicagofaucets.com

2100 South Clearwater Drive
Des Plaines, IL 60018
Phone: 847-803-5000
chicagofaucets.com