Repair Parts

116.431.AB.1T

Touch-free, programmable faucet with above-deck electronics

CHICAGO FAUCETS
Geberit Group

Base Parts:

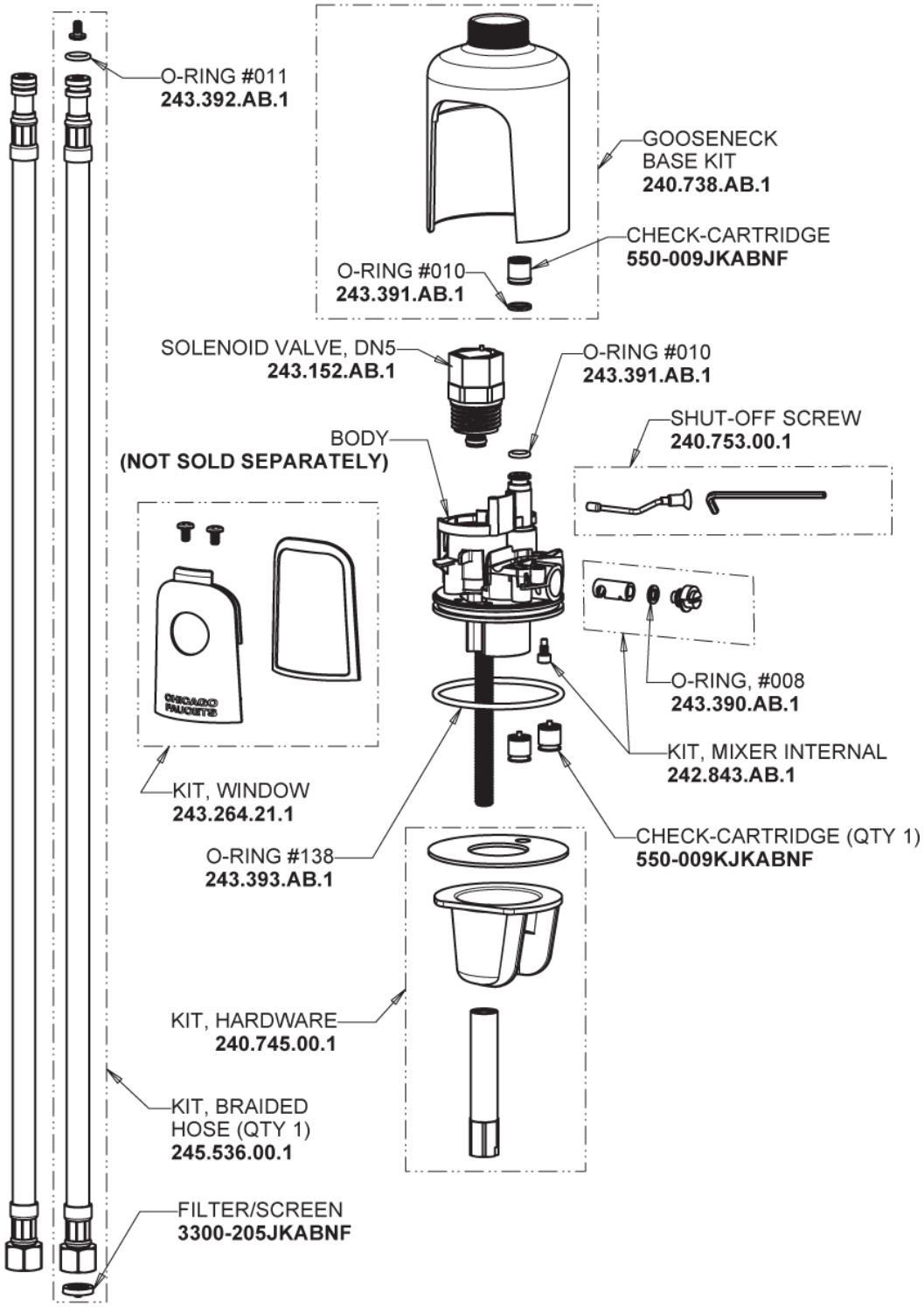

For Technical Assistance:

Phone: 800-TEC-TRUE (832-8783)

Email: techsupport.us@chicagofaucets.com

2100 South Clearwater Drive
Des Plaines, IL 60018
Phone: 847-803-5000
chicagofaucets.com

Repair Parts

116.431.AB.1T

Touch-free, programmable faucet with above-deck electronics

CHICAGO FAUCETS
Geberit Group

5-1/4" Rigid/Swing Gooseneck Spout with Flow Control
GN2H8FCJKABCP

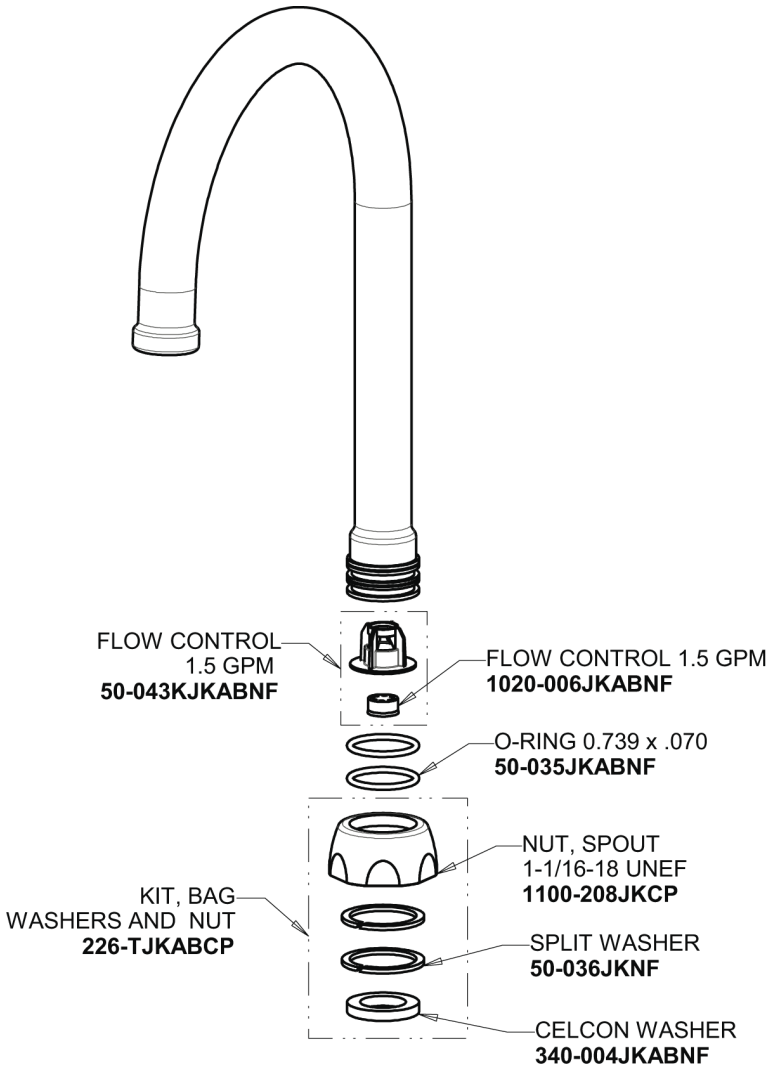

Electronic Module
242.433.00.1T

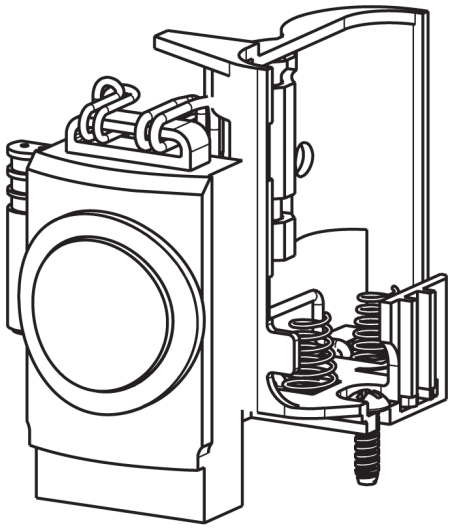

CR-P2 6V Lithium Battery
242.560.00.1

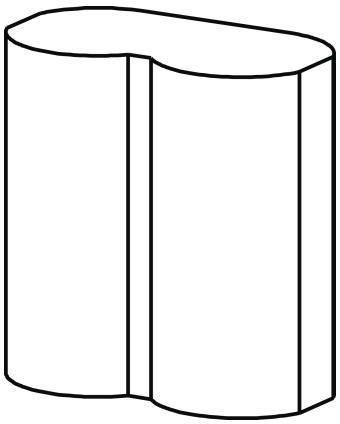

For Technical Assistance:

Phone: 800-TEC-TRUE (832-8783)
Email: techsupport.us@chicagofaucets.com

2100 South Clearwater Drive
Des Plaines, IL 60018
Phone: 847-803-5000
chicagofaucets.com